Reference Manual
00809-0100-4811, Rev DD
September 2024

Rosemount™ 3300 Level Transmitter

Guided Wave Radar



ROSEMOUNT™

EMERSON™

Safety messages

NOTICE

Read this manual before working with the product. For personal and system safety and for optimum product performance, ensure that you thoroughly understand the contents before installing, using, or maintaining this product.

For technical assistance, contacts are listed below:

Customer Central

Technical support, quoting, and order-related questions.

- United States - 1-800-999-9307 (7:00 am to 7:00 pm CST)
- Asia Pacific- 65 777 8211

North American Response Center

Equipment service needs.

- 1-800-654-7768 (24 hours a day — includes Canada)
- Outside of these areas, contact your local Emerson representative.

⚠ WARNING

Failure to follow safe installation and servicing guidelines could result in death or serious injury.

Ensure only qualified personnel perform installation or service.

Use the equipment only as specified in this manual. Failure to do so may impair the protection provided by the equipment.

Flamepath joints are not for repair. Contact the manufacturer.

⚠ WARNING

Explosions could result in death or serious injury.

Verify that the operating environment of the transmitter is consistent with the appropriate hazardous locations specifications.

Temperature restrictions apply for Explosion-proof versions. For limits, see certificate-specific information in the Rosemount 3300 Product Certifications document.

In an explosion-proof/flameproof installation, do not remove the transmitter covers when power is applied to the transmitter.

Eliminate the risk of Electrostatic Discharge (ESD) discharge prior to dismounting the transmitter head. Probes may generate an ignition-capable level of electrostatic charge under extreme conditions. During any type of installation or maintenance in a potentially explosive atmosphere, the responsible person should ensure that any ESD risks are eliminated before attempting to separate the probe from the transmitter head.

Before connecting a handheld communicator in an explosive atmosphere, ensure that the instruments are installed in accordance with intrinsically safe or non-incendive field wiring practices.

⚠ WARNING

Electrical shock could cause death or serious injury.

Avoid contact with the leads and terminals. High voltage that may be present on leads can cause electrical shock.

Ensure the mains power to the transmitter is off and the lines to any other external power source are disconnected or not powered while wiring the transmitter.

⚠ WARNING

Process leaks could result in death or serious injury.

Ensure the transmitter is handled carefully. If the process seal is damaged, gas might escape from the tank.

To avoid process leaks, only use the O-ring designed to seal with the corresponding flange adapter.

⚠ WARNING

Any substitution of non-authorized parts or repair, other than exchanging the complete transmitter head or probe assembly, may jeopardize safety and is prohibited.

Unauthorized changes to the product are strictly prohibited as they may unintentionally and unpredictably alter performance and jeopardize safety. Unauthorized changes that interfere with the integrity of the welds or flanges, such as making additional perforations, compromise product integrity and safety. Equipment ratings and certifications are no longer valid on any products that have been damaged or modified without the prior written permission of Emerson. Any continued use of product that has been damaged or modified without the written authorization is at the customer's sole risk and expense.

⚠ WARNING

Physical access

Unauthorized personnel may potentially cause significant damage to and/or misconfiguration of end users' equipment. This could be intentional or unintentional and needs to be protected against.

Physical security is an important part of any security program and fundamental in protecting your system. Restrict physical access by unauthorized personnel to protect end users' assets. This is true for all systems used within the facility.

NOTICE

The products described in this document are NOT designed for nuclear-qualified applications. Using non-nuclear qualified products in applications that require nuclear-qualified hardware or products may cause inaccurate readings. For information on Rosemount nuclear-qualified products, contact your local Emerson Sales Representative.

⚠ CAUTION

This product is designed to meet FCC and R&TTE requirements for a non-intentional radiator. It does not require any licensing whatsoever and has no tank restrictions associated with telecommunications issues.

⚠ CAUTION

This device complies with Part 15 of the Federal Communication Commission (FCC) Rules. Operation is subject to the following conditions:

This device may not cause harmful interference.

This device must accept any interference received, including interference that may cause undesired operation.

Contents

Chapter 1 Introduction....7
1.1 Using this manual....7
1.2 Product certifications....7
1.3 Product recycling/disposal....7

Chapter 2 Transmitter overview....9
2.1 Measurement principle....9
2.2 Application examples....9
2.3 System architecture....12
2.4 Components of the transmitter....13
2.5 Process characteristics....14
2.6 Vessel characteristics....16
2.7 Probe selection guide....17

Chapter 3 Mechanical installation....19
3.1 Safety messages....19
3.2 Installation procedure....20
3.3 Before you install....21
3.4 Installation and mounting considerations....24
3.5 Shorten the probe....32
3.6 Mount a centering disc....37
3.7 Mount device on tank....40
3.8 Anchor the probe....60

Chapter 4 Electrical installation....65
4.1 Safety messages....65
4.2 Power supply....66
4.3 Cable selection....66
4.4 Cable/conduit entries....66
4.5 Wiring diagram....67
4.6 Load limitations....69
4.7 HART® to Modbus® converter (HMC)....70
4.8 Connect the transmitter....74
4.9 Optional devices....74

Chapter 5 Configuration....79
5.1 Safety messages....79
5.2 Overview....80
5.3 Establish HART® communication for transmitter with HART to Modbus® Converter....80
5.4 Configuration using the Radar Configuration Tool....82
5.5 Change Modbus communication parameters....87
5.6 Configure the alarm output for the Modbus® transmitter....89
5.7 Advanced configuration....91
5.8 HART® multi-drop configuration....92

5.9 Use with the Rosemount 333 HART® Tri-Loop™ 92

Chapter 6 Operation 95
6.1 Display functionality 95
6.2 Error messages 96

Chapter 7 Service and troubleshooting 97
7.1 Safety messages 97
7.2 Diagnostic messages 98
7.3 Troubleshooting guides 102
7.4 Service and troubleshooting tools 105
7.5 Application challenges 120
7.6 Replace the transmitter head 123
7.7 Replace the probe 124
7.8 Service support 125

Appendix A Specifications and reference data 127
A.1 Performance specifications 127
A.2 Functional specifications 131
A.3 Physical specifications 141
A.4 Dimensional drawings 146

Appendix B Configuration parameters 159
B.1 Menu tree 159
B.2 Setup 160

Appendix C HART® to Modbus® Converter (HMC) module 171
C.1 Modbus® communication protocol configuration 171
C.2 Common Modbus® host configuration 177
C.3 Specific Modbus® host configuration 182

1 Introduction

1.1 Using this manual

This manual provides installation, configuration and maintenance information for the Rosemount™ 3300 Level Transmitter.

Transmitter overview contains an introduction to theory of operation a and description of the transmitter. Information on applications, process and vessel characteristic, and a probe selection guide are also included.

Mechanical installation contains mounting considerations and mechanical installation instructions.

Electrical installation contains electrical installation instructions.

Configuration provides instructions on configuration of the transmitter using the Radar Configuration Tool (RCT) software or a handheld communicator.

Operation contains operation techniques such as viewing measurement data and display functionality.

Service and troubleshooting provides troubleshooting techniques for the most common operating problems, as well as diagnostic and error messages, and service instructions.

Specifications and reference data supplies reference and specification data.

Configuration parameters provides extended information about the configuration parameters.

HART® to Modbus® Converter (HMC) module describes the operation of the HART® to Modbus® Converter (HMC).

1.2 Product certifications

See the Rosemount 3300 Product Certifications document for detailed information on the existing approvals and certifications.

1.3 Product recycling/disposal

Consider recycling equipment and packaging.

Dispose of the product and packaging in accordance with local and national legislation.

2 Transmitter overview

2.1 Measurement principle

Low power, nano-second microwave pulses are guided down a probe submerged in the process media. When a microwave pulse reaches a medium with a different dielectric constant, part of the energy is reflected back to the transmitter.

The transmitter uses the residual wave of the first reflection for measuring the interface level. Part of the wave, which was not reflected at the upper product surface, continues until it is reflected at the lower product surface. The speed of this wave depends fully on the dielectric constant of the upper product.

The time difference between the transmitted and the reflected pulse is converted into a distance, and the total level or interface level is then calculated. The reflection intensity depends on the dielectric constant of the product: the higher dielectric constant value, the stronger reflection.

Figure 2-1: Measurement Principle

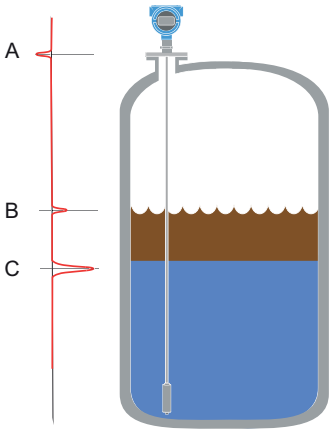

A. Reference pulse
B. Level
C. Interface level

2.2 Application examples

The Rosemount 3300 Level Transmitter is suited for aggregate (total) level measurements on most liquids, semi-liquids, and liquid/liquid interfaces.

Guided microwave technology offers the highest reliability and precision to ensure measurements are virtually unaffected by temperature, pressure, vapor gas mixtures, density, turbulence, bubbling/boiling, low level, varying dielectric media, pH, and viscosity.

Guided wave radar technology in combination with advanced signal processing makes the Rosemount 3300 Level Transmitters suitable for a wide range of applications:

Boiling conditions with vapor and turbulence

The Rosemount 3300 Level Transmitter works well in boiling conditions with vapor and turbulence. If there are disturbing objects in the vicinity of the transmitter, the coaxial probe is particularly suitable.

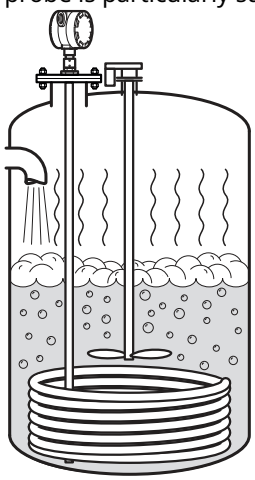

Separators, accumulators, and production tanks

The Rosemount 3302 measures both level and interface level in a separator tank.

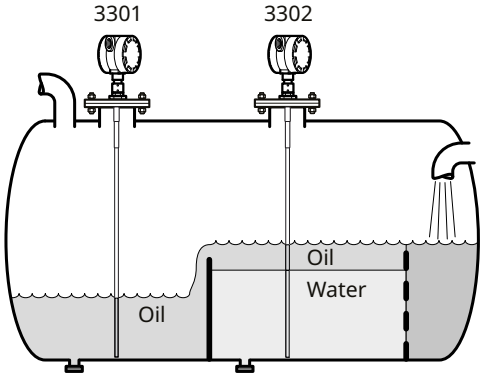

Chamber applications

The Rosemount 3300 Level Transmitter is well suited for chamber applications, such as distillation columns.

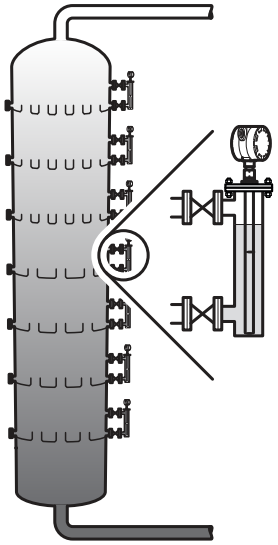

Waste tanks and sump pits

The Rosemount 3300 Level Transmitter is a good choice for underground tanks. It is installed on the top of the tank with the radar pulse concentrated near the probe. It can be equipped with probes that are unaffected by high and narrow openings or nearby objects.

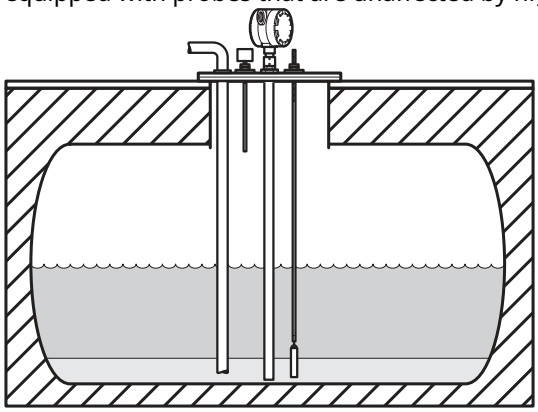

Small ammonia, NGL, and LPG tanks

Guided wave radar technology is a good choice for reliable measurements in small ammonia, NGL, and LPG tanks.

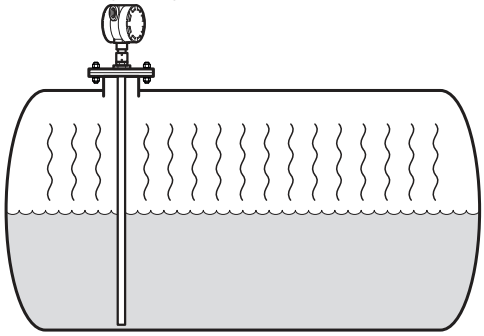

2.3 System architecture

The Rosemount 3300 Level Transmitter is loop-powered which means it uses the same two wires for both power supply and output signal. The output is a 4-20 mA analog signal superimposed with a digital HART® signal.

By using the optional Rosemount 333 HART Tri-Loop™, it is possible to convert the HART signal to up to three additional 4-20 mA analog signals.

With the HART protocol it is possible to use multidrop configuration. In this case communication is restricted to digital since current is fixed to the 4 mA minimum value.

The transmitter can be connected to display Rosemount 751 Field Signal Indicator or it can be equipped with an integral display.

The transmitter can easily be configured by using a handheld communicator or a PC with the Radar Configuration Tool (RCT) software. The Rosemount 3300 is also compatible with AMS Device Manager, which can also be used for configuration.

Figure 2-2: System Architecture

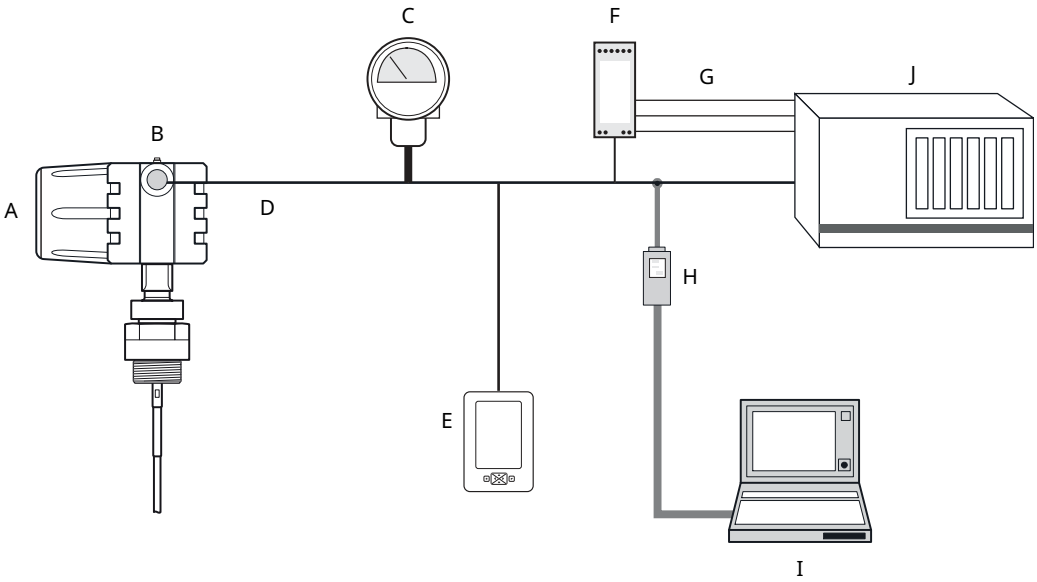

A. Integral display
B. Rosemount 3300 Level Transmitter
C. Rosemount 751 Field Signal Indicator
D. 4-20 mA/HART
E. Handheld communicator
F. Tri-Loop
G. 3 x 4-20 mA
H. HART modem
I. RCT or AMS Device Manager
J. DCS

2.4 Components of the transmitter

The Rosemount 3300 Level Transmitter has an aluminum or stainless steel transmitter housing which contains advanced electronics for signal processing. The radar electronics produces an electromagnetic pulse, which is guided by the probe.

There are different probe types available for various applications: rigid single lead, segmented rigid single lead, flexible single lead, and coaxial.

Figure 2-3: Transmitter Components

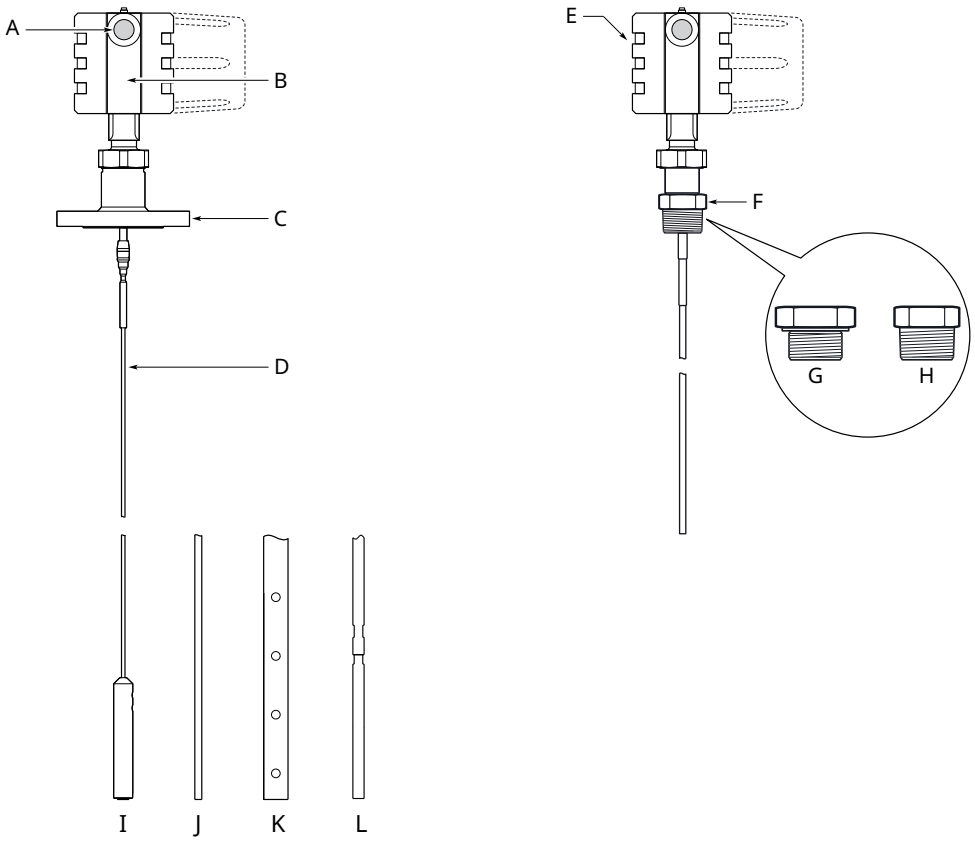

A. Cable entry: ½-in. NPT; Optional adapters: M20, eurofast®, minifast®
B. Radar electronics
C. Flanged process connections
D. Probe
E. Dual compartment housing
F. Threaded process connections
G. BSPP (G)
H. NPT
I. Flexible single lead with weight
J. Rigid single lead
K. Coaxial
L. Segmented rigid single lead probe

2.5 Process characteristics

The Rosemount 3300 Level Transmitter has high sensitivity because of its advanced signal processing and high signal-to-noise ratio. This makes it able to handle various disturbances, however, the following circumstances should be considered before mounting the transmitter.

2.5.1 Contamination/product build-up

Heavy contamination or product build-up on the probe should be avoided since it may decrease the sensitivity of the transmitter and lead to measurement errors.

For viscous or sticky applications, it is important to choose a suitable probe. Periodic cleaning may also be required.

Maximum measurement error due to contamination is 1-10 percent depending on probe type, dielectric constant, contamination thickness and contamination height above product surface.

Related information

Contamination/product build-up

2.5.2 Bridging

Heavy product build-up results in bridging between the pipe and inner rod for coaxial probes, and may cause erroneous level readings, so it must be prevented. A single lead probe is recommended in these situations.

2.5.3 Foam

The Rosemount 3300 Level Transmitter measurement in foamy applications depends on the foam properties; light and airy or dense and heavy, high or low dielectrics, etc. If the foam is conductive and creamy, the transmitter may measure the surface of the foam. If the foam is less conductive, the microwaves may penetrate the foam and measure the liquid surface.

2.5.4 Vapor

In some applications, such as high pressure boiling water, there is a heavy vapor above the product surface that could influence the level measurement. The Rosemount 3300 Level Transmitter can be configured to compensate for the influence of vapor.

2.5.5 Interface measurements

The Rosemount 3302 is a good choice for measuring the interface of oil and water, or other liquids with significant dielectric differences. It is also possible to measure interfaces with a Rosemount 3301 in applications where the probe is fully submerged in the liquid.

Figure 2-4: Interface Level Measurement

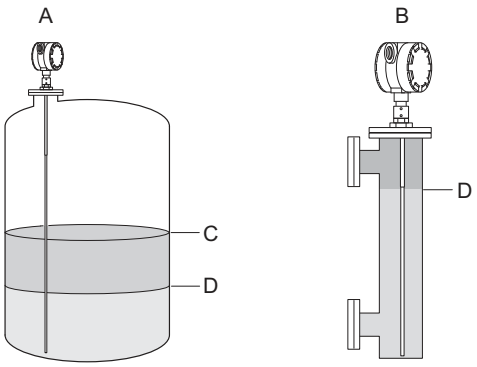

A. Rosemount 3302
B. Rosemount 3301 (fully submerged)
C. Product level
D. Interface level

2.6 Vessel characteristics

2.6.1 Heating coils, agitators

Because the radar signal is transmitted along a probe, the transmitter is generally not affected by objects in the tank. Avoid physical contact with metallic objects when single lead probes are used.

Avoid physical contact between probes and agitators, as well as applications with strong fluid movement, unless the probe is anchored. If the probe is able to move 1 ft. (30 cm) from any object, such as an agitator, during operation, the probe tie-down is recommended.

To stabilize the probe for side forces, a weight may be hung at the probe end (flexible probes only) or fix/guide the probe to the tank bottom.

2.6.2 Tank shape

The guided wave radar transmitter is insensitive to the tank shape. Since the radar signal travels along a probe, the shape of the tank bottom has no effect on the measurement performance. The transmitter handles flat or dish-bottom tanks equally well.

2.7 Probe selection guide

Use the following guidelines to choose appropriate probe for your Rosemount 3300 Level transmitter:

Table 2-1: Probe Selection Guide

G=Good, NR=Not Recommended, AD=Application Dependent (consult factory)

	Coaxial	Rigid single lead, segmented rigid single lead	Flexible single lead
Measurements			
Level	G	G	G
Interface (liquid/liquid)	G[1]	NR	NR
Process medium characteristics			
Changing density	G	G	G
Changing dielectric[2]	G	G	G
Wide pH variations	G	G	G
Pressure changes	G	G	G
Temperature changes	G	G	G
Condensing vapors	G	G	G
Bubbling/boiling surfaces	G	G	AD
Foam (mechanical avoidance)	AD	NR	NR
Foam (top of foam measurement)	NR	AD	AD
Foam (foam and liquid measurement)	NR	NR	NR
Clean liquids	G	G	G
Liquid with dielectric <2.5	G	AD[3]	NR
Coating liquids	NR	AD[4]	AD
Viscous liquids	NR	AD[4]	G
Crystallizing liquids	NR	AD	AD
Solids/Powders	NR	AD	AD
Fibrous liquids	NR	G	G

Table 2-1: Probe Selection Guide *(continued)*

	Coaxial	Rigid single lead, segmented rigid single lead	Flexible single lead
Tank environment considerations			
Probe is close (<12 in./30 cm) to tank wall / disturbing objects	G	NR	NR
High turbulence	G	G	AD
Turbulent conditions causing breaking forces	NR	NR	AD
Tall and narrow mounting nozzles (diameter <6 in./15 cm and height>diameter + 4 in./10 cm)	G	NR	NR
Probe might touch nozzle / disturbing object	G	NR	NR
Liquid or vapor spray might touch probe	G	NR	NR
Disturbing EMC environment in tank	AD	NR	NR

(1) Not in fully immersed applications.
(2) For overall level applications a changing dielectric has no effect on the measurement. For interface measurements a changing dielectric of the top fluid will degrade the accuracy of the interface measurement.
(3) OK when installed in pipe.
(4) For viscous or sticky applications, it is not recommended to use centering discs mounted along the probe.

3 Mechanical installation

3.1 Safety messages

Instructions and procedures in this section may require special precautions to ensure the safety of the personnel performing the operations. Information that potentially raises safety issues is indicated by a warning symbol (⚠). Refer to the following safety messages before performing an operation preceded by this symbol.

⚠ WARNING

Failure to follow safe installation and servicing guidelines could result in death or serious injury.

Ensure only qualified personnel perform installation or service.

Use the equipment only as specified in this manual. Failure to do so may impair the protection provided by the equipment.

Repair, e.g. substitution of components, etc. may jeopardize safety and is under no circumstances allowed.

Flamepath joints are not for repair. Contact the manufacturer.

⚠ WARNING

Explosions could result in death or serious injury.

Verify that the operating environment of the transmitter is consistent with the appropriate hazardous locations specifications.

Temperature restrictions apply for Explosion-proof versions. For limits, see certificate-specific information in the Rosemount 3300 Product Certifications document.

In an explosion-proof/flameproof installation, do not remove the transmitter covers when power is applied to the transmitter.

Eliminate the risk of Electrostatic Discharge (ESD) discharge prior to dismounting the transmitter head. Probes may generate an ignition-capable level of electrostatic charge under extreme conditions. During any type of installation or maintenance in a potentially explosive atmosphere, the responsible person should ensure that any ESD risks are eliminated before attempting to separate the probe from the transmitter head.

Before connecting a handheld communicator in an explosive atmosphere, ensure that the instruments are installed in accordance with intrinsically safe or non-incendive field wiring practices.

⚠ WARNING

Electrical shock could cause death or serious injury.

Avoid contact with the leads and terminals. High voltage that may be present on leads can cause electrical shock.

Ensure the mains power to the transmitter is off and the lines to any other external power source are disconnected or not powered while wiring the transmitter.

⚠ WARNING

Process leaks could result in death or serious injury.

Ensure the transmitter is handled carefully. If the process seal is damaged, gas might escape from the tank.

To avoid process leaks, only use the O-ring designed to seal with the corresponding flange adapter.

3.2 Installation procedure

Follow these steps for proper installation:

Procedure

1. Review mounting considerations.
2. Check switches for 4-20 mA alarm output.
3. Mount the transmitter.
4. Wire the transmitter.
5. Make sure covers and cable/conduit connections are tight.
6. Power up the transmitter.
7. Configure the transmitter.
8. Verify measurements.
9. Optional: Set the write protection switch.

Note
Disconnect power supply before setting the write protection.

3.2.1 Workflow for commissioning a transmitter with Modbus® protocol

Procedure

1. Mount the transmitter on the tank.
2. Connect the power and communication wires.
3. Establish HART® communication with the transmitter. Do one of the following:
   - Connect to the MA/MB terminals (tunneling mode).
   - Connect to the HART terminals.
4. Configure the transmitter.
5. Configure the Modbus communication.
6. Configure Modbus host.
7. Verify output values as reported by the transmitter.

3.3 Before you install

3.3.1 Equipment category

The electronics enclosures are category 2G or 2D equipment. The probes not covered with plastic and not made of titanium, are category 1G or 1D. The plastic covered probes or probes made of titanium, are only category 1G equipment.

Figure 3-1: Equipment Category

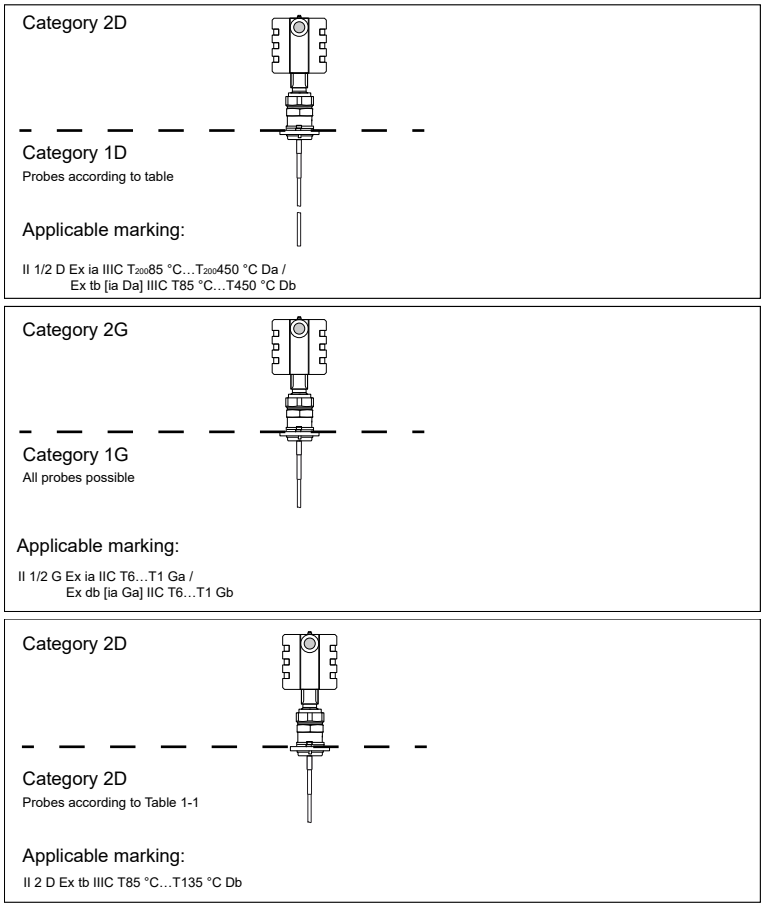

Probes with non-conducting surfaces and light metals

Probes covered with plastic and/or with plastic discs may generate an ignition- capable level of electrostatic charge under certain extreme conditions. Therefore, when the probe is used in a potentially explosive atmosphere, appropriate measures must be taken to prevent electrostatic discharge. These probes are not allowed in dust classified areas.

The following probes do not contain plastic or PTFE material, and are allowed to be placed in a Dust classified area:

Table 3-1: Probes Containing no Plastic or PTFE Material

Code	Material of construction: Process connection/Probe
1	316L SST (EN 1.4404)
2	Alloy C-276 (UNS N10276) plate design if flanged version
3	Alloy 400 (UNS N04400) plate design if flanged version
5	Titanium Gr-1 and Gr-2
9	Duplex 2205 (EN 1.4462/UNS S31803) (plate design if flanged version)
L	Alloy 625 (UNS N06625)
M	Alloy 400 (UNS N04400)
H	Alloy C-276 (UNS N10276)
D	Duplex 2205 (EN 1.4462/UNS S31803)

The Material of Construction Code can be found in the ninth character position of the transmitter model code (for example 330xxxxx1xxxxxxxx).

Probes and flanges containing >7.5 percent magnesium or zirconium are not allowed in explosive dust atmosphere. Contact your Emerson sales representative for more information.

Probes and flanges containing light metals

When used in category 1/2G installations, probes and flanges containing titanium or zirconium must be mounted in such a way that sparks from impact or friction between these parts and steel cannot occur.

Separation element (EPL Ga/Gb, Da/Db)

The materials of the separation element are > 3 mm stainless steel and a 22 mm bushing filled with 2-part epoxy. The epoxy has a continuous operating temperature of -55 °C ≤ COT ≤ 130 °C. Under normal operation the separation element is not pressurized or in contact with the process media.

3.3.2 Alarm and write protection switches

Electronic boards are electrostatically sensitive. Failure to observe proper handling precautions for static-sensitive components can result in damage to the electronic components. Do not remove the electronic boards from the Rosemount 3300 Level Transmitter.

Note
To ensure long life for your radar transmitter, and to comply with hazardous location installation requirements, tighten covers on both sides of the electronics housing.

Table 3-2: Switch Settings

Switch bank	Description	Default setting	Position settings
Alarm	4–20 mA alarm output	High	High, Low
Write protect	Security write protection	Disabled (OFF)	ON = enabled, OFF = disabled

The transmitter monitors its own operation. This automatic diagnostic routine is a timed series of checks repeated continuously. If the diagnostic routine detects a failure in the

transmitter, the 4–20 mA output is driven upscale (high) or downscale (low) depending on the position of the Alarm switch.

Security write protection prevents unauthorized access to configuration data.

Related information

Signal on alarm
Saturation levels

3.3.3 Set jumpers and switches

Set alarm and write protection on the circuit board

If alarm and security jumpers are not set, the transmitter operates with the default alarm condition HIGH and Security OFF.

Prerequisites

Write protection must be set after configuration.

Procedure

1. Remove the cover on the circuit side (see label marked circuit side).
2. To set the 4-20 mA alarm output to LOW, move the alarm switch to the LOW position.
3. To enable the security write protection feature, move the write protect switch to the ON position.
4. Replace the cover and tighten securely.

Figure 3-2: Circuit Board

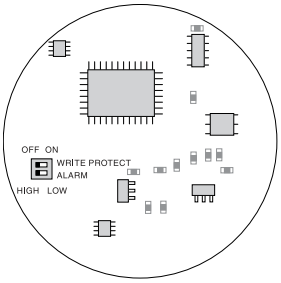

Set alarm and write protection on the LCD display

Prerequisites

To have the LCD display override the circuit board settings, the write protection switch on the circuit board needs to be in the OFF position and the alarm switch on the circuit board needs to be in the HIGH position.

Procedure

1. To set the 4-20 mA alarm output to LOW, place jumper between the right and center hole position.
2. To enable the security write protection feature, place jumper between the left and center hole position - ON.

Figure 3-3: LCD Display

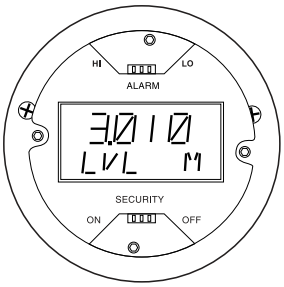

3.4 Installation and mounting considerations

3.4.1 Recommended mounting position for liquids

When finding an appropriate mounting position for the transmitter, the conditions of the tank must be carefully considered. The transmitter should be mounted so that the influence of disturbing objects is reduced to a minimum. For easy access to the transmitter, ensure that it is mounted with sufficient service space.

Figure 3-4: Mounting Position

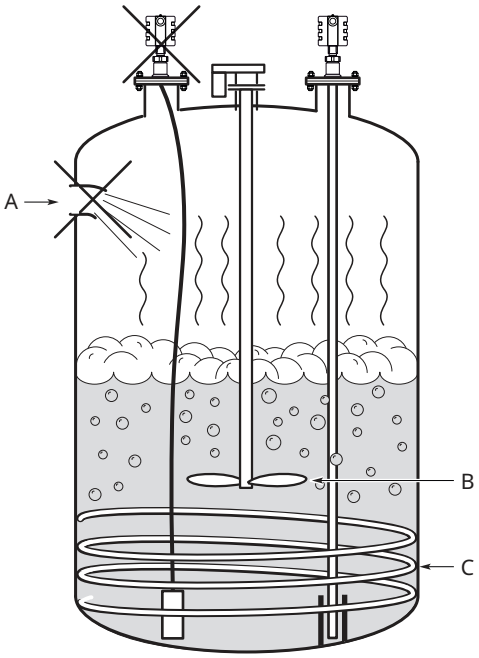

A. Inlet pipe
B. Agitator
C. Heating coils

The following guidelines should be considered when mounting the transmitter:

- Do not mount close to inlet pipes.

- Do not mount close to agitators. If the probe can move to within 12 in. (30 cm) away from an agitator, the probe should be anchored.
- If the probe tends to sway due to turbulent conditions in the tank, the probe should be anchored.
- Avoid mounting close to heating coils.
- Position the probe such that it is subject to a minimum of lateral force.
- The probe should not come into contact with the nozzle or other objects in the tank.

Note
Violent fluid movements causing high sideway forces may break rigid probes.

3.4.2 Free space requirement

If the probe is mounted close to a wall, nozzle or other tank obstruction, noise might appear in the level signal. Therefore the following minimum clearance, according to Table 3-3, must be maintained.

Figure 3-5: Free Space Requirement

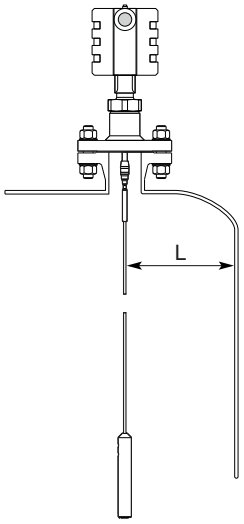

L. Clearance to tank wall

Table 3-3: Recommended Minimum Free Space for Optimal Performance

Probe type	Condition	Minimum clearance (L)
Rigid single lead/Segmented rigid single lead(1)	Smooth metal tank wall	4 in. (100 mm)
	Disturbing objects such as pipes and beams Plastic, concrete or rugged metal tank wall	12 in. (300 mm)
Flexible single	Smooth metal tank wall	4 in. (100 mm)
	Disturbing objects such as pipes and beams Plastic, concrete or rugged metal tank wall	12 in. (300 mm)
Coaxial(1)	N/A	0 in. (0 mm)

(1) Minimum clearance from tank bottom for the coaxial and rigid single probes is 0.2 in. (5 mm).

3.4.3 Flange connection on nozzles

Figure 3-6: Mounting in Nozzles

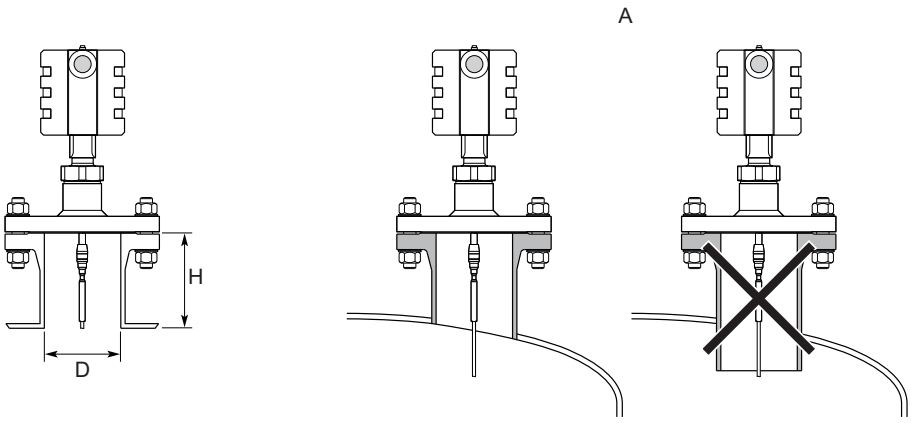

A. Confirm the nozzle does not extend into the tank.

The transmitter can be mounted in nozzles by using an appropriate flange. It is recommended that the nozzle size is within the dimensions given in Table 3-4.

Table 3-4: Nozzle Considerations for Optimal Performance

	Single (rigid/segmented/flexible)	Coaxial
Recommended nozzle diameter (D)	6 in. (150 mm)	> probe diameter
Minimum nozzle diameter (D)(1)	2 in. (50 mm)	> probe diameter
Recommended nozzle height (H)(2)	4 in. (100 mm) + nozzle diameter(3)	N/A

(1) The Trim Near Zone (TNZ) function may be necessary or an Hold Off Distance/Upper Null Zone (UNZ) setup may be required to mask the nozzle.
(2) Longer nozzles may be used in certain applications. Consult your local Emerson representative for details.
(3) For nozzles taller than 4 in. (100 mm), the long stud version is recommended (option code LS) to prevent the flexible portion from touching the edge of the nozzle.

Note
The probe must not be in contact with the nozzle (except for the coaxial probe).

Narrow nozzles

For narrow nozzles it may be necessary to increase the Upper Null Zone in order to reduce the measuring range in the upper part of the tank. By setting the Upper Null Zone equal to the nozzle height (H), the impact on the measurement due to interfering echoes from the nozzle will be reduced. Amplitude Threshold adjustments may also be needed in this case.

Figure 3-7: Upper Null Zone for Narrow Nozzles

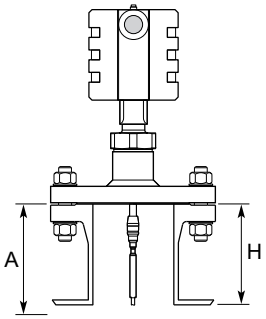

A. Upper Null Zone

3.4.4 Installation in still pipe/chamber

General chamber considerations

Dimensioning the chamber/pipe correctly and selecting the appropriate probe is key to the success in these applications. When selecting a smaller chamber/pipe diameter, such as 2-in., a flexible probe is not suitable due to the chance of it coming into contact with the walls. Also, relatively large side inlets may interfere with the signal.

When gas lift and/or turbulence may occur (e.g. boiling hydrocarbons), a 3- or 4-in. chamber/pipe diameter is recommended for maximum measurement reliability. This is especially true in high pressure and high temperature installations.

Table 3-5: Recommended and Minimum Chamber/Still Pipe Diameters for Different Probes

Probe type	Recommended diameter	Minimum diameter
Rigid single/segmented rigid single	3 or 4 in. (75 or 100 mm)	2 in. (50 mm)
Flexible single	4 in. (100 mm)	Consult your local Emerson representative
Coaxial	3 or 4 in. (75 or 100 mm)	1.5 in. (37.5 mm)

Note
Metal pipes are preferred, especially in applications with low dielectric constant, to avoid disturbances from objects near the pipe.

Rosemount chamber

A Rosemount chamber allows external mounting of process level instrumentation. It supports a variety of process connections, and optional drain and vent connections.

The standard Rosemount chambers are designed according to ASME B31.3. Rosemount chambers compliant with the Pressure Equipment Directive (PED) are available. Customer specific engineered solutions for Rosemount chambers are available upon request. Use option code XC to order together with the Rosemount 3300 Series Transmitters.

Use a centering disc the same diameter as the chamber if the probe length >3.3 ft. (1 m). See Table 3-8 for which disc to use.

Existing chamber

A Rosemount 3300 Level Transmitter is the perfect replacement in an existing displacer chamber. Proprietary flanges are offered, enabling use of existing chambers to make installation easy.

Figure 3-8: Existing Displacer Chamber

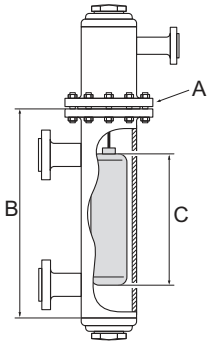

A. Replace chamber flange
B. Probe length
C. Displacer length

Considerations when changing to Rosemount 3300:

- The Rosemount 3300 Level Transmitter flange choice and probe length must be correctly matched to the chamber. Both standard ASME and EN (DIN), as well as proprietary chamber flanges, are available. See Proprietary flanges to identify the proprietary flanges.
- See Table 3-8 for guidelines on which disc size to use.
- See Table 3-6 for guidelines on the required probe length.

Table 3-6: Required Probe Length in Chambers

Chamber manufacturer	Probe length(1)
Major torque-tube manufacture (249B, 249C, 249K, 249N, 259B)	Displacer + 9 in. (229 mm)
Masoneilan™ (torque tube operated), proprietary flange	Displacer + 8 in. (203 mm)
Other - torque tube(2)	Displacer + 8 in. (203 mm)
Magnetrol® (spring operated)(3)	Displacer + between 7.8 in. (195 mm) to 15 in. (383 mm)
Others - spring operated(2)	Displacer + 19.7 in. (500 mm)

(1) If flushing ring is used, add the ring height to the probe length.
(2) For other manufacturers, there are small variations. This is an approximate value; actual length should be verified.

(3) Lengths vary depending on model, SG, and rating, and should be verified.

For additional information, see the Replacing Displacers with Guided Wave Radar Technical Note.

Probe type in chamber considerations

When installing a Rosemount 3300 in a chamber, the single lead probe is recommended.

The probe must not touch the chamber wall, should extend the full height of the chamber, but not touch the bottom of the chamber.

The probe length determines if a single rigid or single flexible probe should be used:

- Less than 19.7 ft. (6.0 m): Rigid single probe is recommended. Use a centering disc for probe > 3.3 ft. (1 m). When mounting space is limited, use a flexible single probe with a weight and centering disc.
- More than 19.7 ft. (6.0 m): Use flexible single probe with a weight and centering disc.

Centering disc for pipe installations

To prevent the probe from contacting the chamber or pipe wall, centering discs are available for flexible single and rigid single probes. The disc is attached to the end of the probe. Discs are made of stainless steel, Alloy C-276, Alloy 400, or PTFE.

For the segmented rigid single lead probe, up to five PTFE centering discs can be mounted along the probe, but keep a minimum distance of two segments between the discs. Additionally, a disc in SST or PTFE (part number 03300-1655-xxxx) can be attached to the end of the probe.

When mounting a centering disc, it is important that it fits correctly in the chamber/pipe. See Figure 3-9 for Dimension D. Table 3-8 shows which centering disc diameter to choose for a particular pipe.

Figure 3-9: Dimension D for Centering Discs

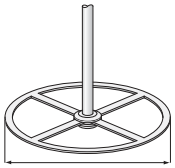

Table 3-7: Centering Disc Dimensions

Disc size	Actual disc diameter (D)
2-in.	1.8 in. (45 mm)
3-in.	2.7 in. (68 mm)
4-in.	3.6 in. (92 mm)
6-in.	5.55 in. (141 mm)
8-in.	7.40 in. (188 mm)

Table 3-8: Centering Disc Size Recommendation for Different Pipe Schedules

Pipe size	Pipe schedule			
	5s, 5 and 10s,10	40s, 40 and 80s, 80	120	160
2-in.	2-in.	2-in.	N/A(1)	N/A(2)
3-in.	3-in.	3-in.	N/A(1)	2-in.
4-in.	4-in.	4-in.	3-in.	3-in.
5-in.	4-in.	4-in.	4-in.	4-in.
6-in.	6-in.	6-in.	4-in.	4-in.
7-in.	N/A(1)	6-in.	N/A(1)	N/A(1)
8-in.	8-in.	8-in.	6-in.	6-in.

(1) Schedule is not available for pipe size.
(2) No centering disc is available.

3.4.5 Installation in non-metallic tanks and open-air applications

Avoid major sources of electrical disturbance in proximity of the installation (e.g. electrical motors, stirrers, servo mechanisms).

Figure 3-10: Avoid Electromagnetic Disturbances

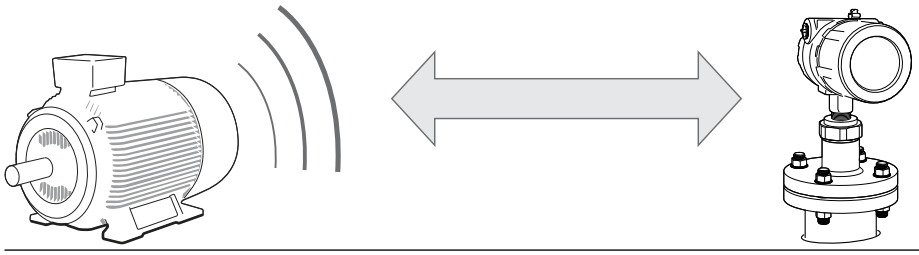

For clean liquids, use a coaxial probe to reduce effect of potential electrical disturbances.

Figure 3-11: Coaxial Probe in an Open-Air Application

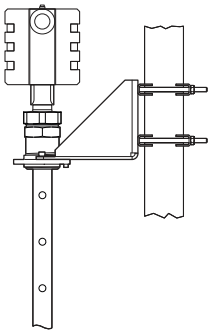

For optimal single lead probe performance in non-metallic tanks, the probe must be mounted with a metal flange, or screwed in to a metal sheet (d > 14 in./350 mm) if a threaded version is used.

Figure 3-12: Mounting in Non-Metallic Tanks

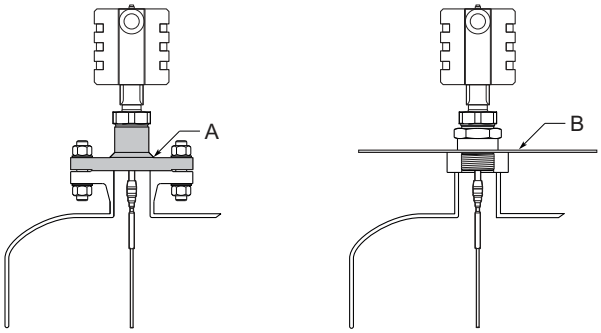

A. Metal flange
B. Metal sheet (d > 14 in./350 mm)

3.4.6 Minimum distance between two single probes

When installing multiple Rosemount 3300 Level Transmitters with single probes in the same tank, ensure to place the devices at proper distance from each other to avoid the risk of interference caused by cross-talk. Table 3-9 provides recommended minimum distance between two probes. A coaxial probe or a probe installed in a still pipe will not cause any cross-talk.

Table 3-9: Minimum Distance between Single Probes

Product	Minimum distance between probes
Oil (DC = 2.1)	5.2 ft. (1.6 m)
Water (DC = 80)	3.3 ft. (1.0 m)

3.4.7 Insulated tanks

For insulated tanks, the permitted ambient temperature is limited above a certain process temperature. Limitations depend on the thickness of the tank insulation.

Figure 3-13: Tank Insulation

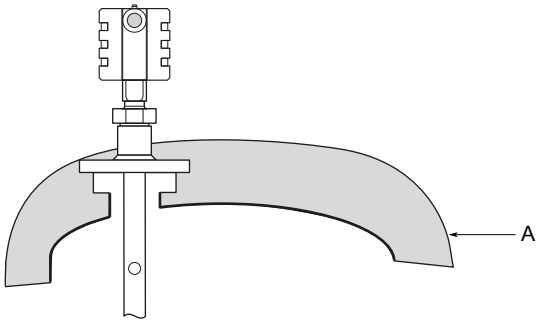

A. Tank insulation

Related information

Temperature limits

3.5 Shorten the probe

3.5.1 Shorten the flexible single lead probe

Prerequisites

Note
The PTFE covered probes must not be cut in field.

Procedure

1. Mark where to cut the probe. Add at least 1.6 in. (40 mm) to the required probe length to be inserted into the weight.

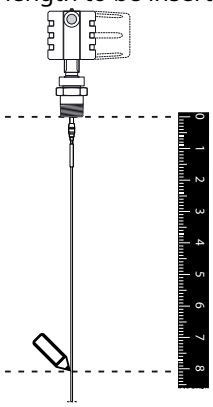

2. Loosen the weight.

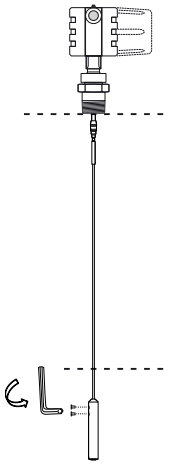

3. Slide the weight up.

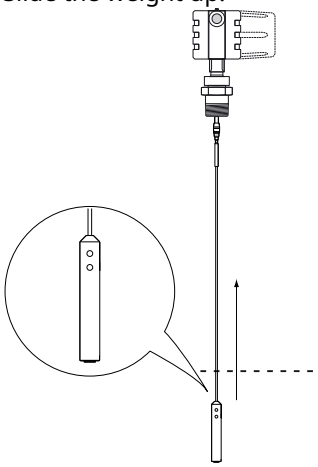

4. Cut the probe at the mark.

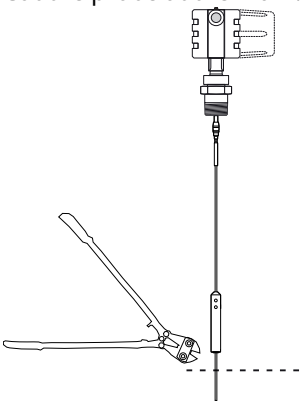

5. Fasten the weight.



Table 3-10: Required Torque and Hex Key Dimensions

Flexible single lead probe	Required torque	Hex key dimension
4 mm wire, stainless steel	3.7 ft-lb (5 Nm)	4 mm
4 mm wire, Alloy C-276	1.8 ft-lb (2.5 Nm)	3 mm
4 mm wire, Alloy 400	1.8 ft-lb (2.5 Nm)	3 mm

Note
If the screws are not tightened according to the required torque, the weight may fall off. This is especially important for solid applications with high tensile loads on the probe.

Postrequisites

After shortening the probe be sure to update the transmitter configuration to the new probe length.

3.5.2 Shorten the rigid single lead probe

Prerequisites

The minimum probe length is 15.7 in. (400 mm).

Note
The PTFE covered probes must not be cut in field.

Note
Ensure the lead is fixed while cutting.

Procedure

1. Mark where to cut the probe.

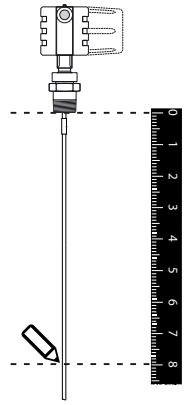

2. Cut the probe at the mark.

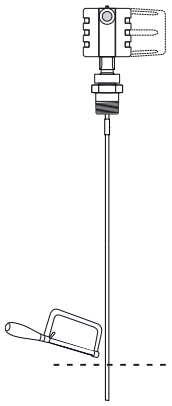

Postrequisites

After shortening the probe be sure to update the transmitter configuration to the new probe length.

3.5.3 Shorten the coaxial probe

Prerequisites

Figure 3-14: Maximum Shortening of Coaxial Probe

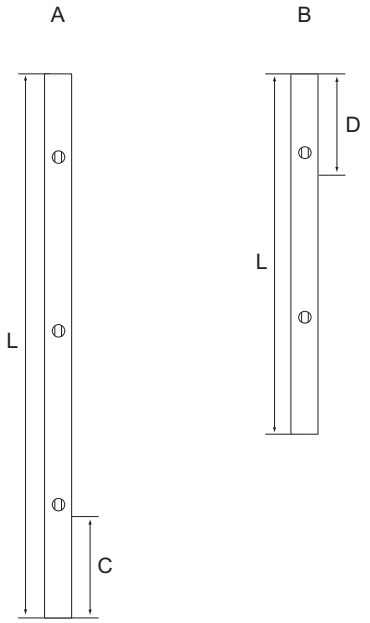

A. Ordered probe length (L) > 49 in. (1250 mm)
B. Ordered probe length (L) ≤ 49 in. (1250 mm)
C. Maximum shortening length: 23.6 in. (600 mm)
D. Minimum probe length: 15.7 in. (400 mm)

Procedure

1. Mark where to cut the probe.
   - Pipes longer than 49 in. (1250 mm) can be shortened by as much as 23.6 in. (600 mm).
   - Pipes shorter than 49 in. (1250 mm) can be cut as long as the remaining length is not less than 15.7 in. (400 mm).

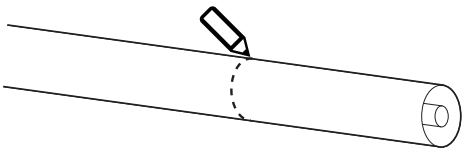

2. Insert the centering piece.

   The centering piece is delivered from factory and should be used to prevent the spacers centering the rod from coming loose.

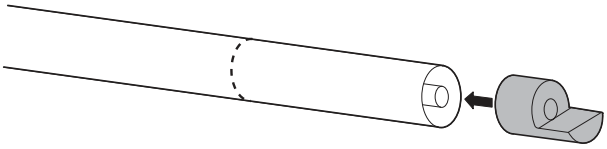

3. Cut the tube to the desired length.

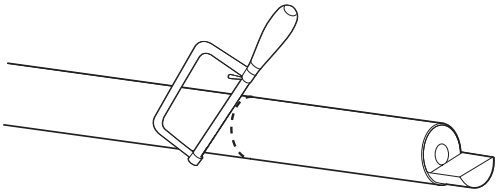

4. Move the centering piece.

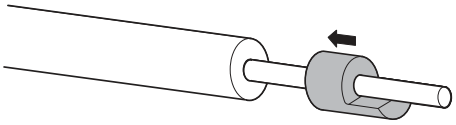

5. Cut the rod inside the tube. Ensure the rod is fixed with the centering piece while cutting.

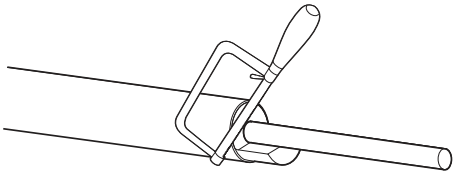

Postrequisites

After shortening the probe be sure to update the transmitter configuration to the new probe length.

3.6 Mount a centering disc

3.6.1 Mount a centering disc on flexible single lead probe

Procedure

1. Mount the centering disc at the end of the weight.

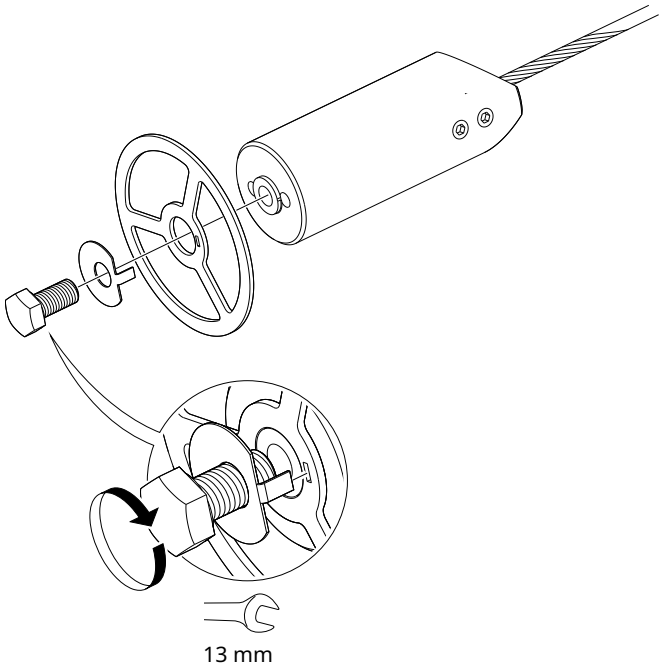

2. Secure the bolt by folding the tab washer.

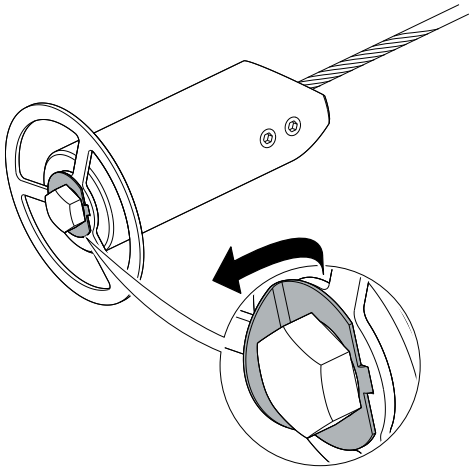

3.6.2 Mount a centering disc on rigid single lead probe (8 mm)

Note
Centering discs shall not be used with PTFE covered probes.

Procedure

1. Drill one hole using the drilling fixture (included in your shipment).

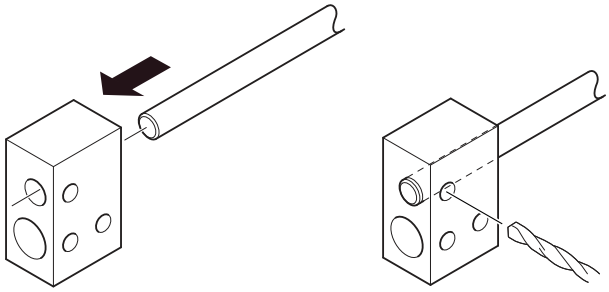

2. Mount the bushing, centering disc, and washer at the probe end.

Note
Do not mount the washer (A) if the centering disc material is PTFE, Alloy C-276, or Alloy 400.

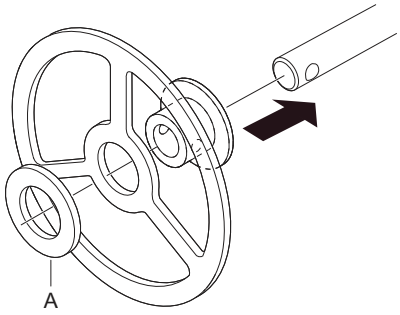

3. Insert the split pin through the bushing and the probe.

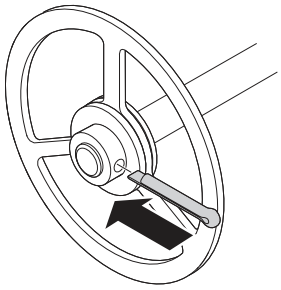

4. Secure the split pin.

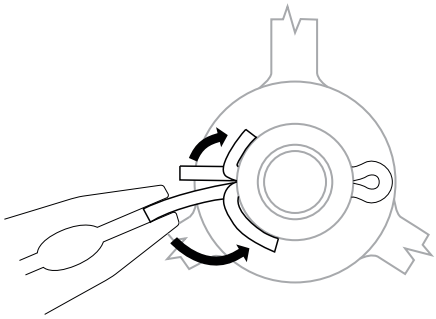

3.6.3 Mount a centering disc on rigid single lead probe (13 mm)

Procedure

1. Drill two holes using the drilling fixture (included in your shipment).

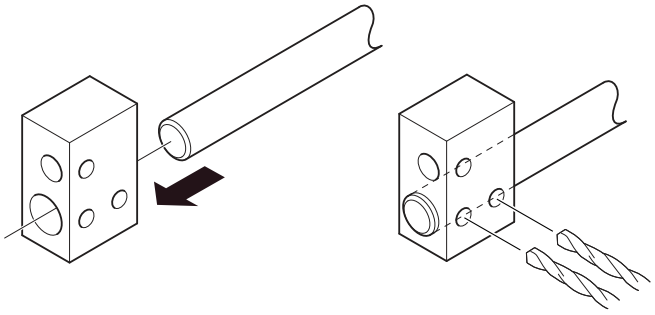

2. Mount the bushings and centering disc at the probe end.

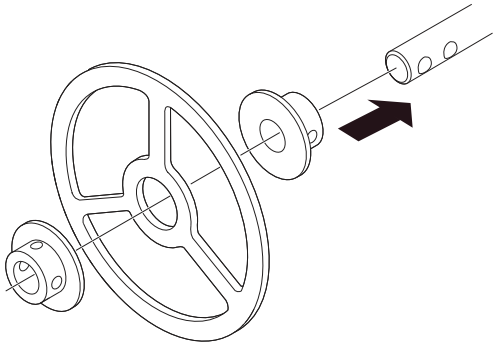

3. Adjust distance by shifting hole for split pin in lower bushing.

0.16 in. (4 mm)

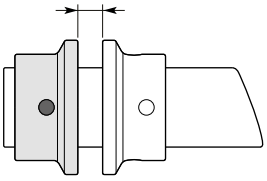

0.08 in. (2 mm)

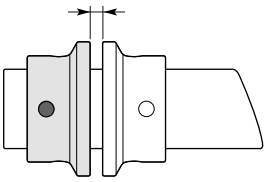

4. Insert the split pins through the bushings and the probe.

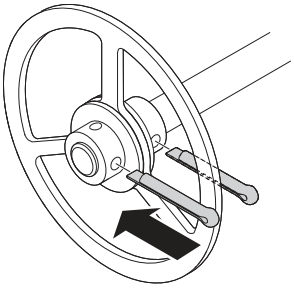

5. Secure the split pins.

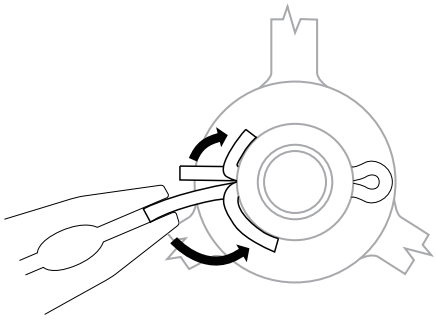

3.7 Mount device on tank

Mount the transmitter with flange on a nozzle on top of the tank. The transmitter can also be mounted on a threaded or Tri Clamp connection.

3.7.1 Tank connection with flange

Prerequisites

Note
PTFE covered probes must be handled carefully to prevent damage to the coating.

Procedure

1. Place a suitable gasket on top of the tank flange.

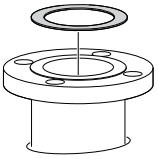

Note
Gasket should not be used for PTFE covered probe with protective plate.

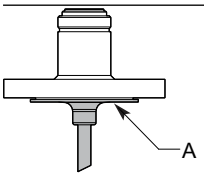

A. PTFE covered probe with protective plate

2. Lower the transmitter and probe with flange into the tank.

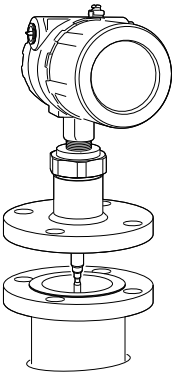

3. Tighten bolts and nuts with sufficient torque for the flange and gasket choice.

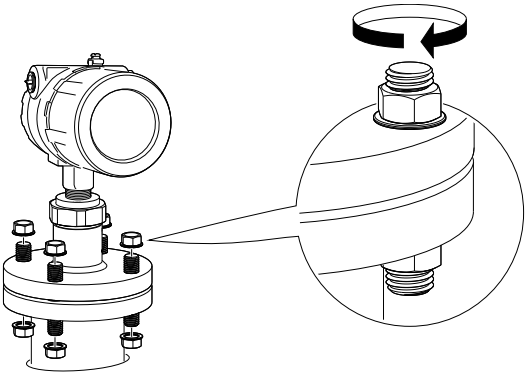

4. Loosen the nut that connects the transmitter head to the probe slightly.

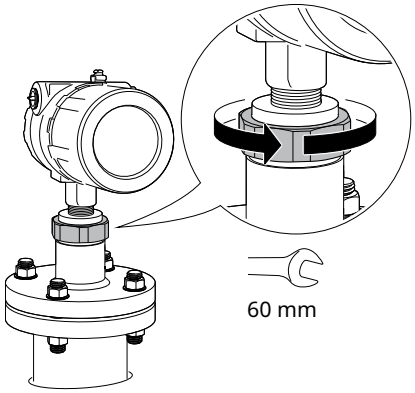

5. Rotate the transmitter housing so the cable entries/display face the desired direction.

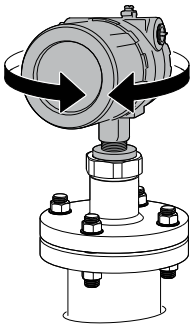

6. Tighten the nut.

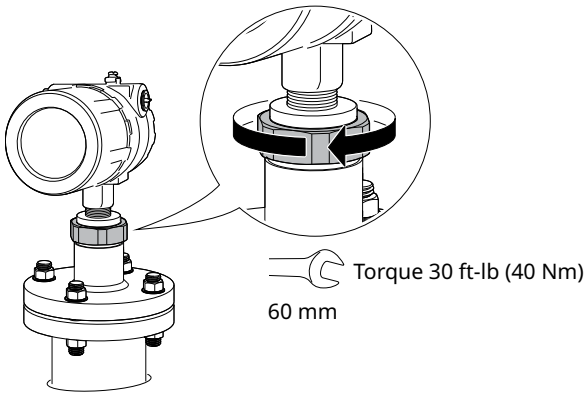

3.7.2 Tank connection with loose flange (plate design)

The transmitter is delivered with head, flange and probe assembled into one unit. If, for some reason, these parts have been disassembled, mount the transmitter as described below.

Prerequisites

Note
PTFE covered probes must be handled carefully to prevent damage to the coating.

Procedure

1. Mount the flange on the probe and tighten the flange nut.

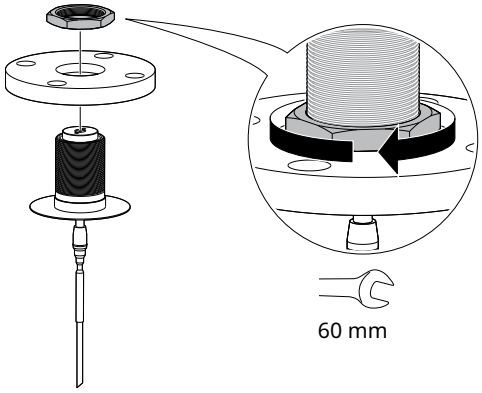

2. Place a suitable gasket on top of the tank flange.

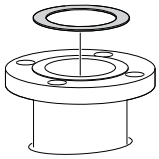

3. Lower the probe with flange into the tank.

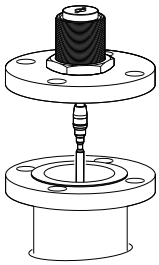

4. Tighten bolts and nuts with sufficient torque for the flange and gasket choice.

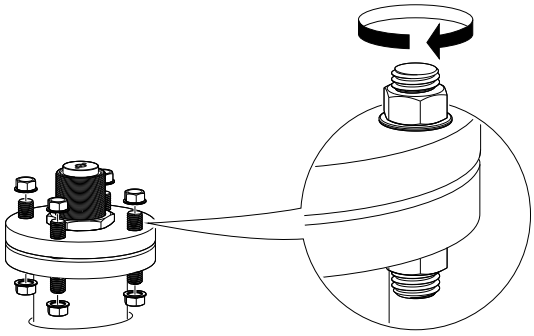

5. Mount the transmitter head.

3.7.3 Threaded tank connection

Prerequisites

Note
PTFE covered probes must be handled carefully to prevent damage to the coating.

Procedure

1. For adapters with BSPP (G) threads, place a suitable gasket on top of the tank flange.

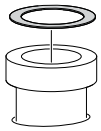

2. For adapters with NPT threads, use anti-seize paste or PTFE tape according to your site procedures.

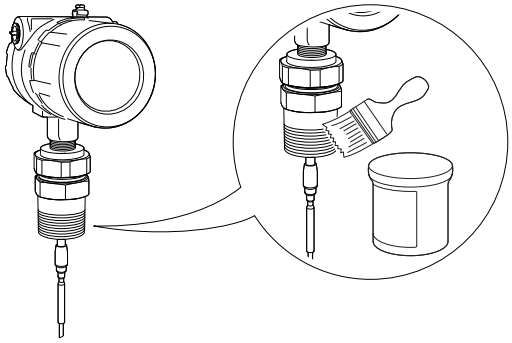

3. Lower the transmitter and probe into the tank.

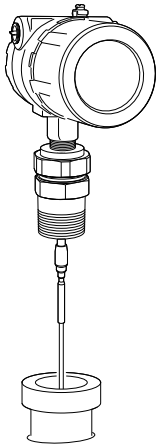

4. Loosen the nut that connects the transmitter head to the probe slightly.

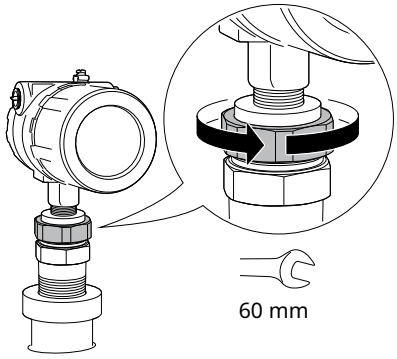

5. Screw the adapter into the process connection.

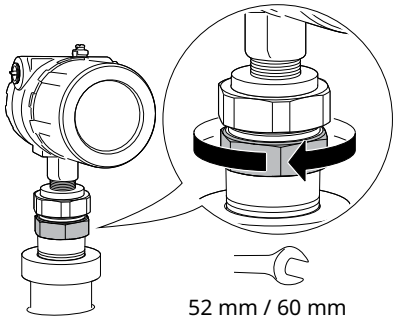

6. Rotate the transmitter housing so the cable entries/display face the desired direction.

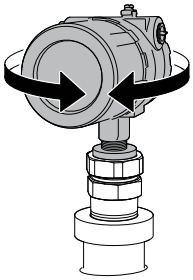

7. Tighten the nut.

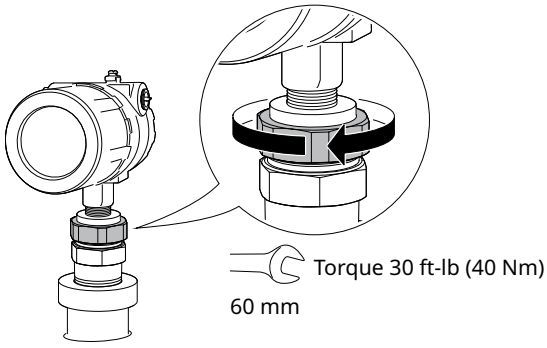

3.7.4 Bracket mounting

Procedure

1. Mount the bracket to the pipe/wall.
   On pipe:

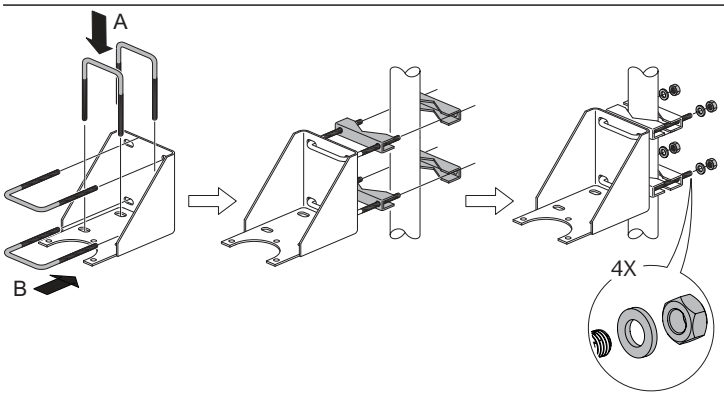

A. Horizontal pipe
B. Vertical pipe

   On wall:

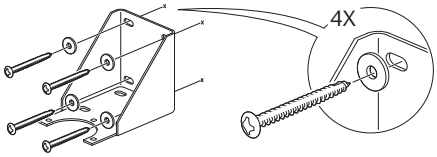

2. Mount the transmitter with probe to the bracket.

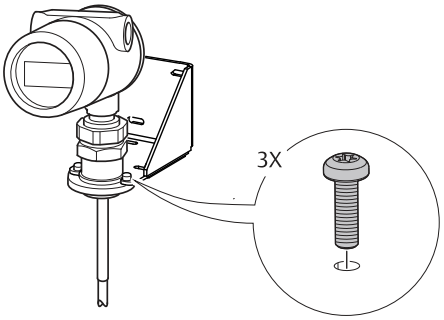

3.7.5 Tank connection with Tri Clamp

Prerequisites

Note
PTFE covered probes must be handled carefully to prevent damage to the coating.

Procedure

1. Place a suitable gasket on top of the tank flange.

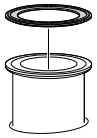

2. Lower the transmitter and probe into the tank.

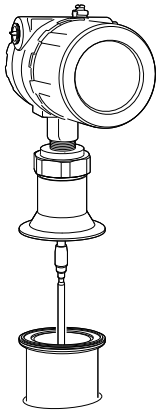

3. Tighten the clamp to the recommended torque (see the manufacturer's instruction manual).

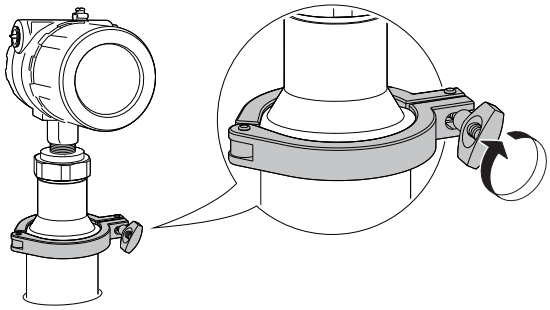

4. Loosen the nut that connects the transmitter head to the probe slightly.

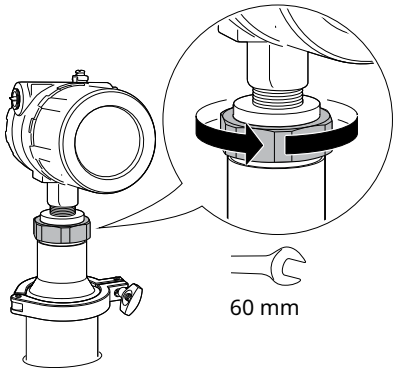

5. Rotate the transmitter housing so the cable entries/display face the desired direction.

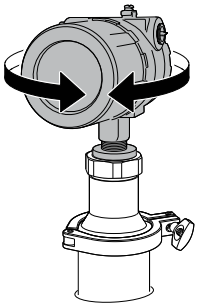

6. Tighten the nut.

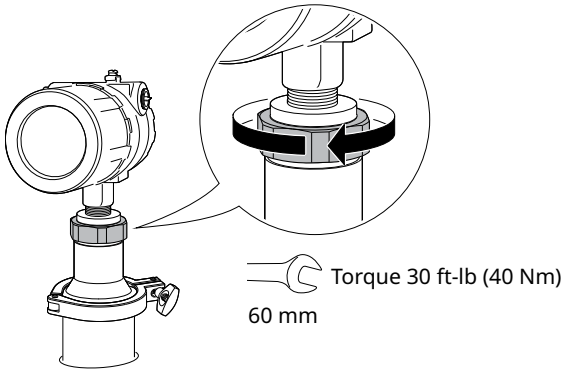

3.7.6 Segmented probe

Segmented probe parts

Figure 3-15: Segmented Probe Parts

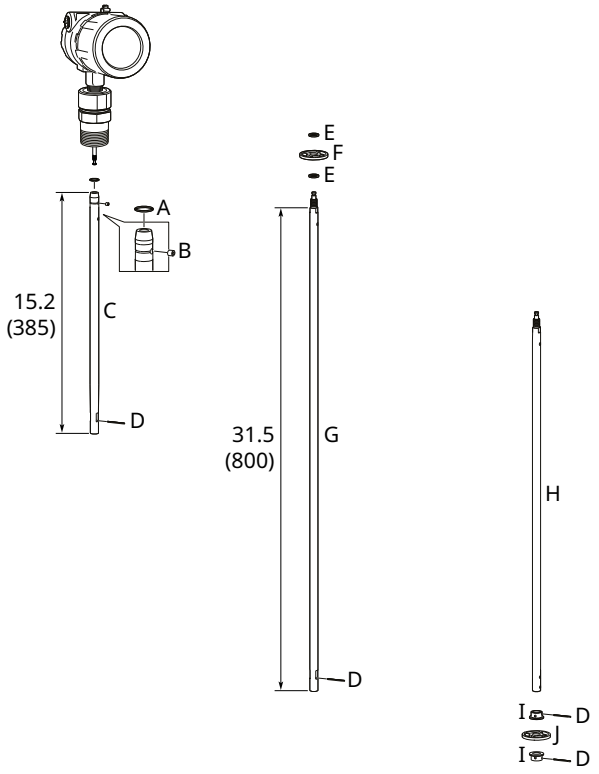

A. Safety ring
B. Screw
C. Top segment
D. Split pin
E. PTFE washer (optional)
F. Centering disc in PTFE (optional)
G. Middle segment
H. Bottom segment (length varies depending on total probe length)
I. Bushing (for the centering disc at the probe end)
J. Bottom centering disc in PTFE or stainless steel (optional)

Verifying probe length

Segmented probe ordered with model code 4S

Before installation, verify the probe length (L) on the label.

Figure 3-16: Label

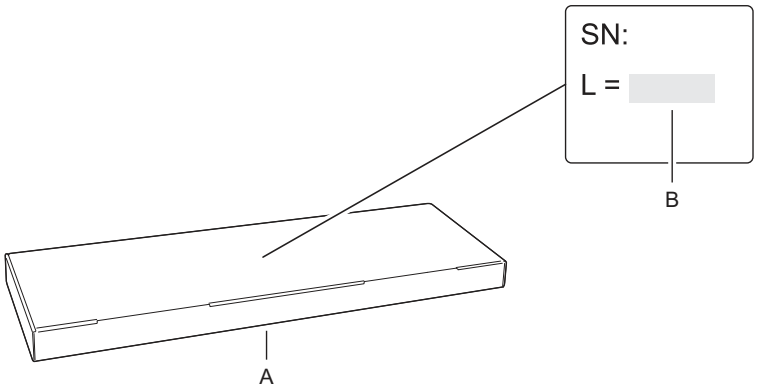

A. Probe segments box
B. Probe length

Segmented probe ordered as spare part kit

Before installation, the number of segments that add up to the desired probe length must be determined. Also, the bottom segment may need to be shortened.

Adjust the probe length

Procedure

1. Determine L, the desired probe length.

L, desired probe length:

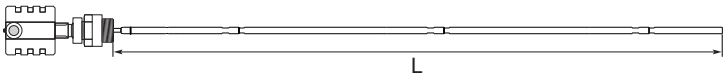

2. Determine n, the number of middle segments needed for the desired probe length. See Determination of probe segments.

n, number of middle segments:

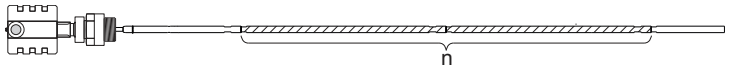

3. Calculate Y, the length of the bottom segment. See Determination of probe segments.

Y, length of bottom segment:

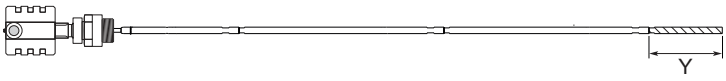

4. Continue as follows:

Length of bottom segment (Y)	Action
Y < 0.4 in. (10 mm) 	• Continue with Step 7. Do not use the bottom segment.
Y ≥ 0.4 in. (10 mm) 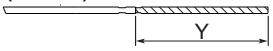	• Continue with Step 5 and cut the bottom segment.
Y = 31.5 in. (800 mm) 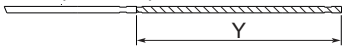	a. Add one extra middle segment to the calculated n. b. Continue with Step 7.

5. Mark where to cut the bottom segment.

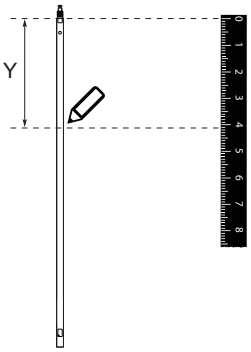

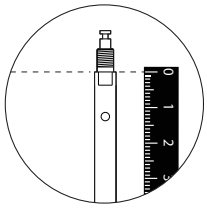

6. Cut the bottom segment at the mark.

Note
Ensure the bottom segment is fixed while cutting.

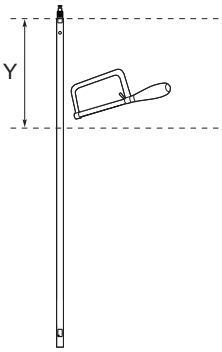

7. Optional: If a bottom centering disc is ordered, then drill two holes on the bottom segment using the drilling fixture.

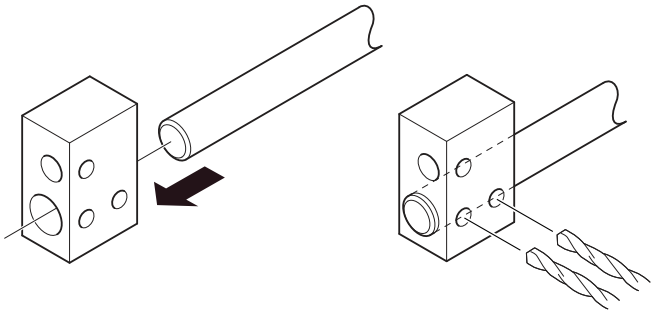

Determination of probe segments

Table 3-11: Determination of Probe Segments for Standard Seal

Desired probe length (L)		Number of middle segments (n)	Length of bottom segment (Y)	
in.	mm		in.	mm
15.8 ≤ L ≤ 47.2	400 ≤ L ≤ 1200	0 pc	Y = L -15.8	Y = L - 400
47.2 < L ≤ 78.7	1200 < L ≤ 2000	1 pc	Y = L - 47.2	Y = L - 1200
78.7 < L ≤ 110.2	2000 < L ≤ 2800	2 pcs	Y = L - 78.7	Y = L - 2000
110.2 < L ≤ 141.7	2800 < L ≤ 3600	3 pcs	Y = L - 110.2	Y = L - 2800
141.7 < L ≤ 173.2	3600 < L ≤ 4400	4 pcs	Y = L - 141.7	Y = L - 3600
173.2 < L ≤ 204.7	4400 < L ≤ 5200	5 pcs	Y = L - 173.2	Y = L - 4400
204.7 < L ≤ 236.2	5200 < L ≤ 6000	6 pcs	Y = L - 204.7	Y = L - 5200
236.2 < L ≤ 267.7	6000 < L ≤ 6800	7 pcs	Y = L - 236.2	Y = L - 6000

Assemble the segmented probe

Prerequisites

Note
If there is enough space beside the tank, the probe can be assembled before inserting it into the tank.

Procedure

1. Insert the stop screw to the top segment. Tighten approximately two turns.

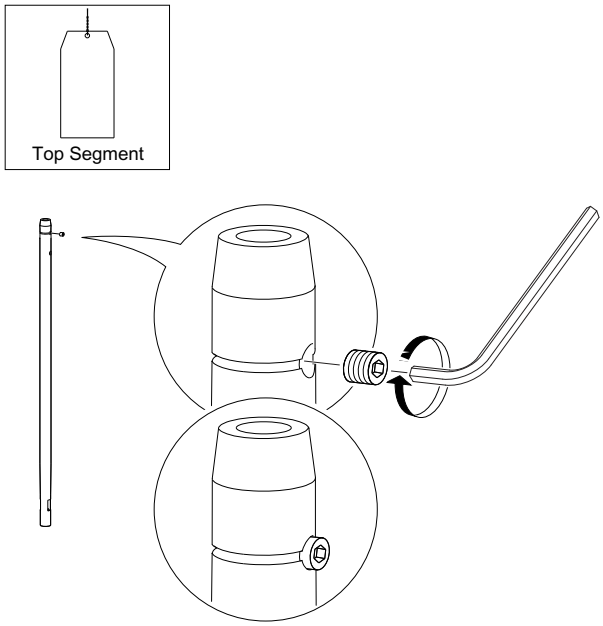

2. Pre-assemble the safety ring.

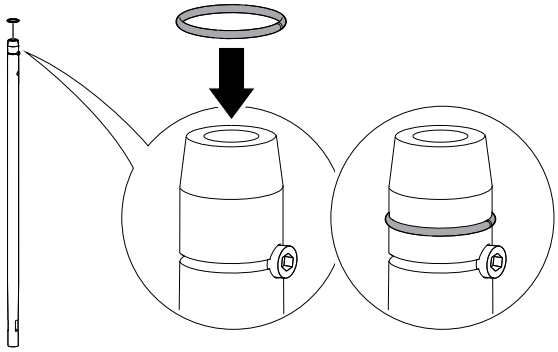

3. Optional: If ordered, mount the centering disc on the bottom segment of the probe.

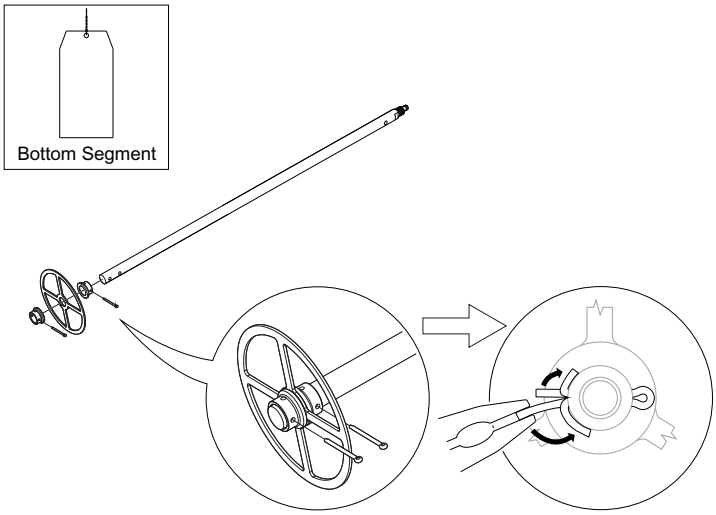

4. Insert the support tool.

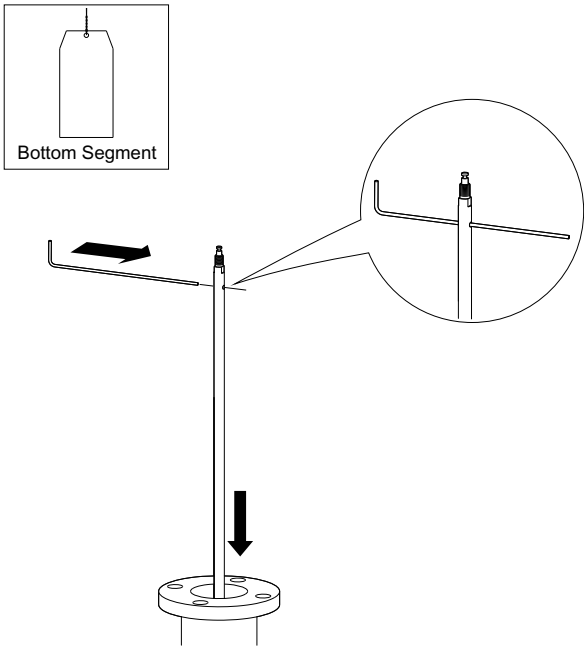

5. Optional: If ordered, mount the centering disc.
   - Maximum five pcs/probe
   - Minimum two segments between each centering disc

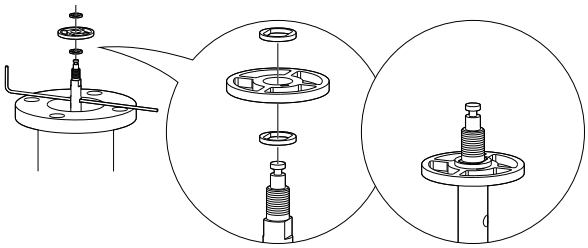

6. Mount a middle segment (hand tight).

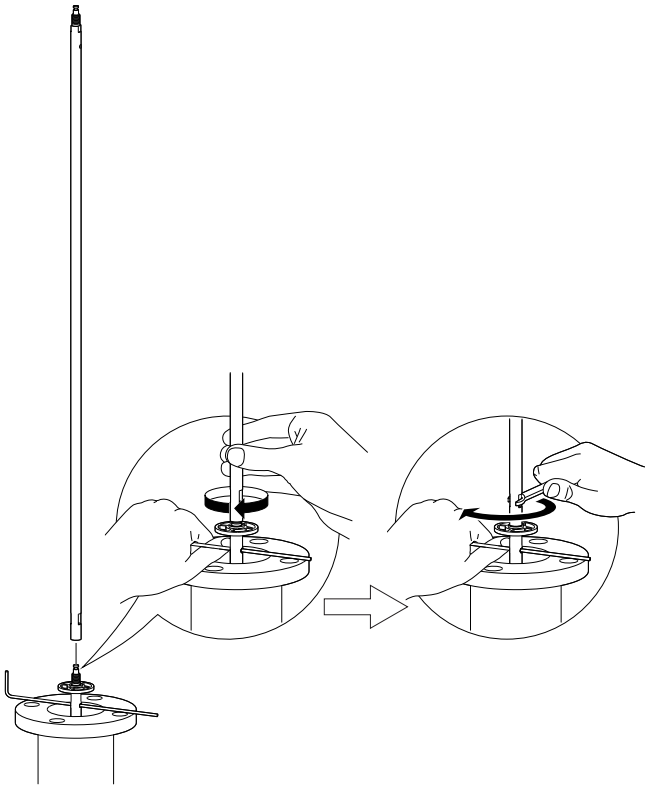

7. Secure the split pin.

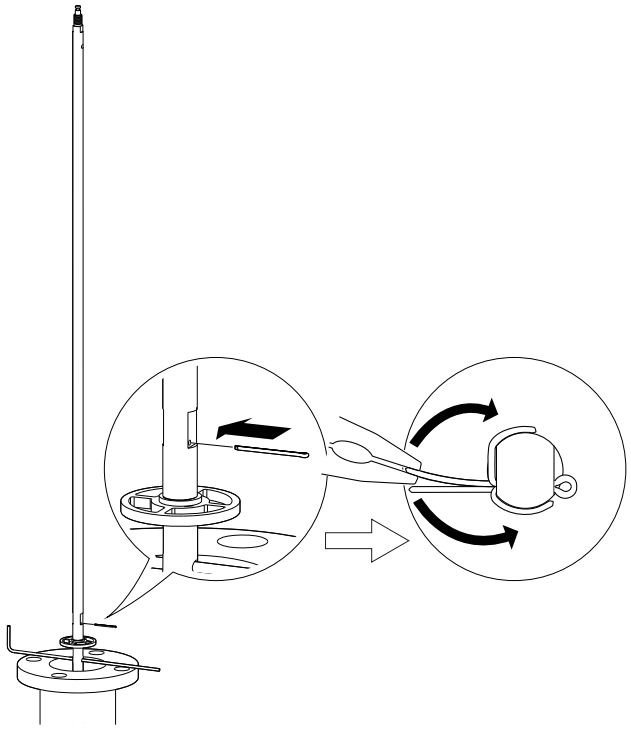

8. Insert the second support tool.

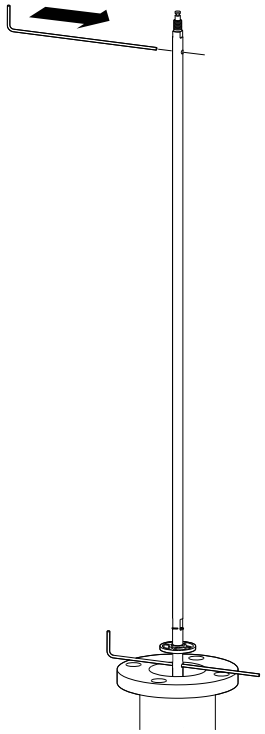

9. Remove the first support tool and lower the probe into the tank.

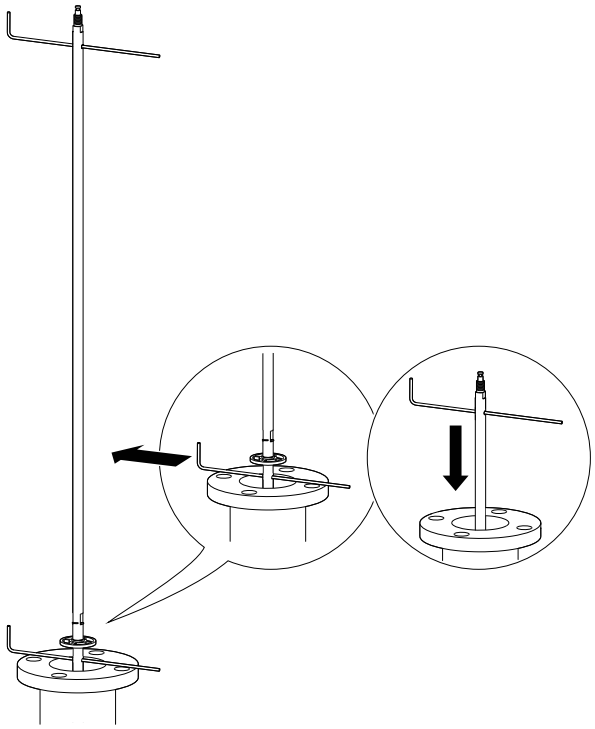

10. Repeat Step 5-Step 9 until all segments are mounted. Be sure to finish with the top segment of the probe.
11. Seal and protect threads. Use anti-seize paste or PTFE tape according to your site procedures.

    ⚠ Only for NPT threaded tank connection.

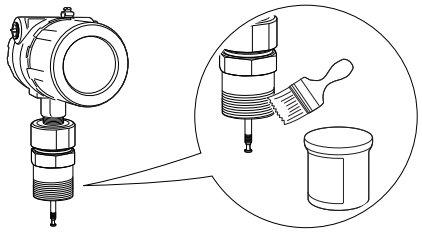

12. Attach the probe to the device.

Note
For safety reasons, at least two people are needed when mounting the device. Hold the device above the tank. High loads can break the support tool.

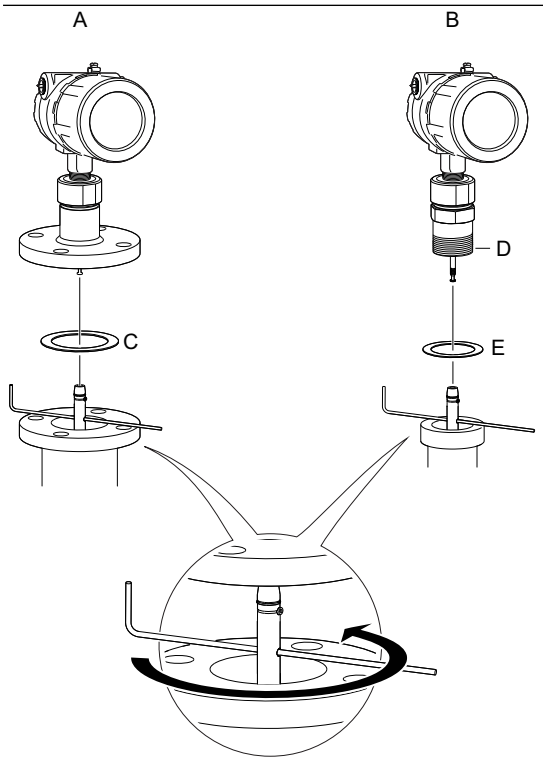

A. Flange/Tri Clamp
B. Threaded
C. Gasket
D. Sealant on threads (NPT)
E. Gasket (BSPP (G))

13. Tighten the stop screw and slide the safety ring into the groove.

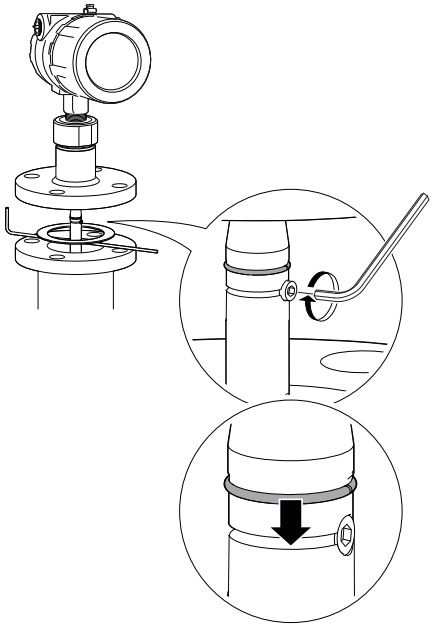

14. Remove the support tool.

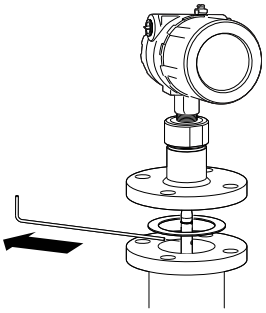

15. Mount the device on the tank.

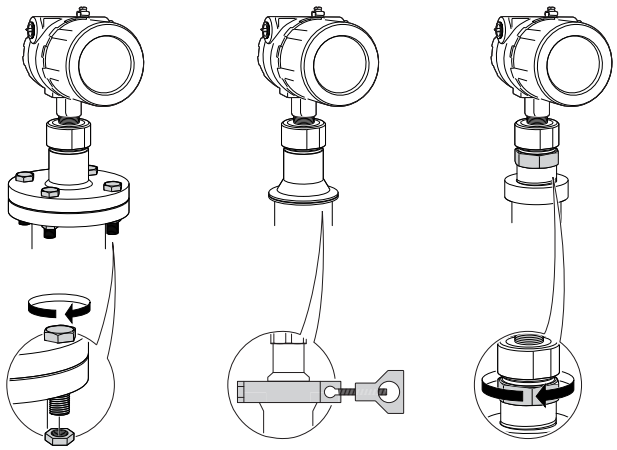

A. Flange
B. Tri Clamp
C. Threaded

16. Rotate the housing to the desired direction.

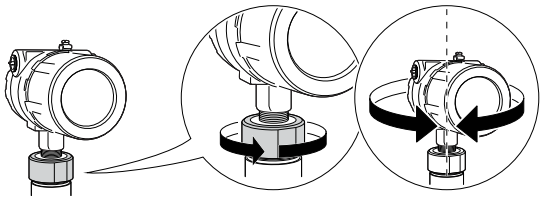

17. Tighten the nut.

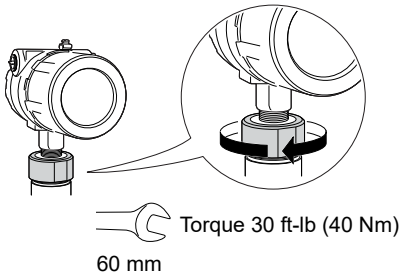

3.8 Anchor the probe

In turbulent tanks it may be necessary to fix the probe. Depending on the probe type, different methods can be used to guide the probe to the tank bottom. This may be needed in order to prevent the probe from hitting the tank wall or other objects in the tank, as well as preventing a probe from breaking.

Flexible single lead probe

The flexible single lead probe itself can be used for anchoring. Pull the probe rope through a suitable anchoring point (e.g. a welded eye), and fasten it with a chuck.

Table 3-12: Required Torque and Hex Key Dimensions

Flexible single lead probe	Required torque	Hex key dimension
4 mm wire, stainless steel	3.7 ft-lb (5 Nm)	4 mm
4 mm wire, Alloy C-276	1.8 ft-lb (2.5 Nm)	3 mm
4 mm wire, Alloy 400	1.8 ft-lb (2.5 Nm)	3 mm

The length of the loop will add to the transition zone. The location of the clamps will determine the beginning of the transition zone.

The Probe Length should be configured as the distance from the Upper Reference Point to the top of the chuck.

Figure 3-17: Flexible Single Lead Probe with Chuck

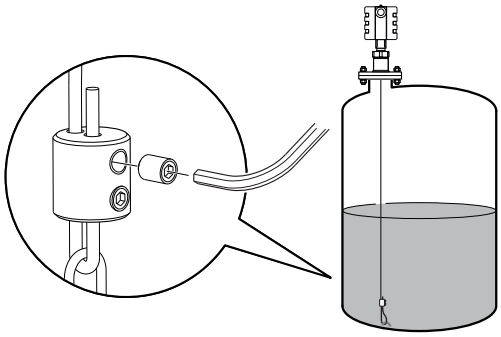

A ring (customer supplied) can be attached to the weight in a threaded (M8x14) hole at the end of the weight. Attach the ring to a suitable anchoring point.

Figure 3-18: Flexible Single Lead Probe with Weight and Ring

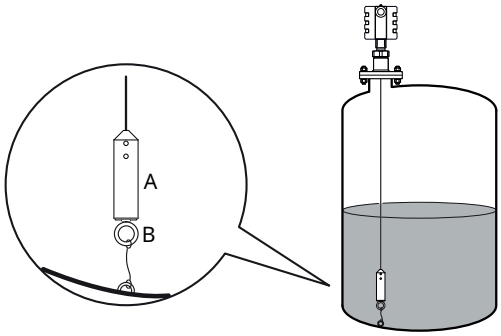

A. Weight with internal threads M8x14
B. Ring

A magnet (customer supplied) can be fastened in a threaded (M8x14) hole at the end of the weight. The probe can then be guided by placing a suitable metal plate beneath the magnet.

Figure 3-19: Flexible Single Lead Probe with Weight and Magnet

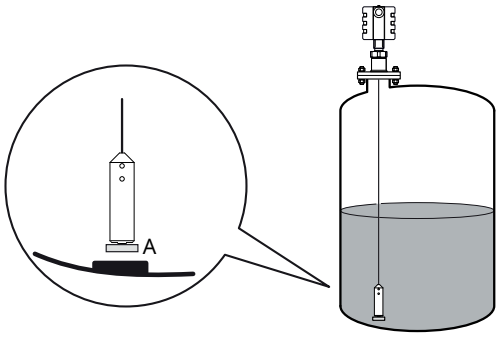

A. Magnet

Rigid single lead probe

The rigid single lead probe can be guided by a tube welded on the tank bottom. Tubes are customer supplied. Ensure that the probe can move freely in order to handle thermal expansion. The measurement accuracy will be reduced close to the tube opening.

Figure 3-20: Rigid Single Lead Probe with Tube

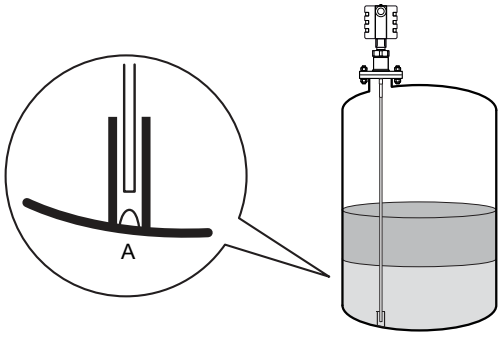

A. Drain

Coaxial probe

The coaxial probe can be secured to the tank wall by fixtures fastened to the tank wall. Fixtures are customer supplied. Ensure the probe can move freely due to thermal expansion without getting stuck in the fixture.

Figure 3-21: Coaxial Probe Secured to the Tank Wall

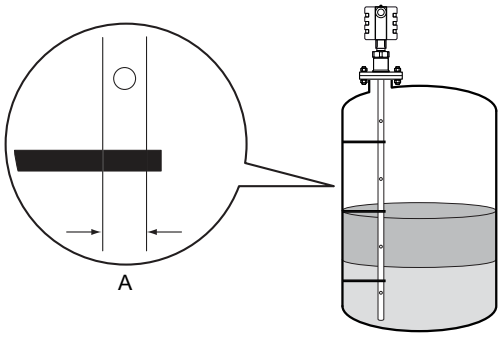

A. Ø 1.1 in. (28 mm)

The coaxial probe can be guided by a tube welded on the tank bottom. Tubes are customer supplied. Ensure that the probe can move freely in order to handle thermal expansion. The measurement accuracy will be reduced close to the tube opening.

Figure 3-22: Coaxial Probe with Tube

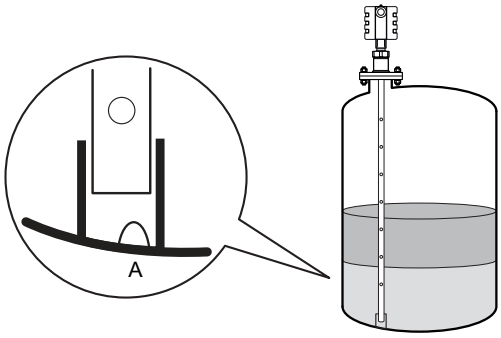

A. Drain

4 Electrical installation

4.1 Safety messages

Instructions and procedures in this section may require special precautions to ensure the safety of the personnel performing the operations. Information that potentially raises safety issues is indicated by a warning symbol (⚠). Refer to the following safety messages before performing an operation preceded by this symbol.

⚠ WARNING

Failure to follow safe installation and servicing guidelines could result in death or serious injury.

Ensure only qualified personnel perform installation or service.

Use the equipment only as specified in this manual. Failure to do so may impair the protection provided by the equipment.

Repair, e.g. substitution of components, etc. may jeopardize safety and is under no circumstances allowed.

Flamepath joints are not for repair. Contact the manufacturer.

⚠ WARNING

Explosions could result in death or serious injury.

Verify that the operating environment of the transmitter is consistent with the appropriate hazardous locations specifications.

Temperature restrictions apply for Explosion-proof versions. For limits, see certificate-specific information in the Rosemount 3300 Product Certifications document.

In an explosion-proof/flameproof installation, do not remove the transmitter covers when power is applied to the transmitter.

Eliminate the risk of Electrostatic Discharge (ESD) discharge prior to dismounting the transmitter head. Probes may generate an ignition-capable level of electrostatic charge under extreme conditions. During any type of installation or maintenance in a potentially explosive atmosphere, the responsible person should ensure that any ESD risks are eliminated before attempting to separate the probe from the transmitter head.

Before connecting a handheld communicator in an explosive atmosphere, ensure that the instruments are installed in accordance with intrinsically safe or non-incendive field wiring practices.

⚠ WARNING

Electrical shock could cause death or serious injury.

Avoid contact with the leads and terminals. High voltage that may be present on leads can cause electrical shock.

Ensure the mains power to the transmitter is off and the lines to any other external power source are disconnected or not powered while wiring the transmitter.

⚠ WARNING

Process leaks could result in death or serious injury.

Ensure the transmitter is handled carefully. If the process seal is damaged, gas might escape from the tank.

To avoid process leaks, only use the O-ring designed to seal with the corresponding flange adapter.

4.2 Power supply

For HART®, the input voltage is 11-42 V (11-30 V in IS applications, 16-42 V in Explosion-proof / Flameproof applications). For Modbus®, the input voltage is 8-30 V.

4.3 Cable selection

The transmitter requires shielded twisted pair wiring (18-12 AWG) suitable for the supply voltage and, if applicable, approved for use in hazardous areas.

4.4 Cable/conduit entries

The electronics housing has two entries for ½-14 NPT. Optional M20×1.5 and PG 13.5 adapters are also available. The connections must be made in accordance with local or plant electrical codes.

Figure 4-1: Electronics Housing

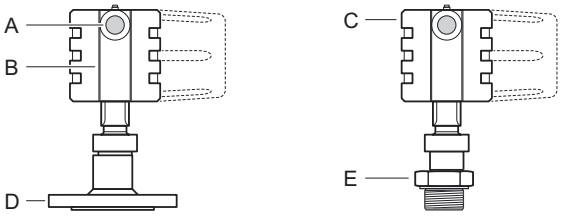

A. Cable Entry: ½-14 NPT
Optional adapters: M20, PG13.5
B. Radar electronics
C. Dual compartment housing
D. Flanged process connections
E. Threaded process connections

Make sure that unused ports are properly sealed to prevent moisture or other contamination from entering the terminal block compartment of the electronics housing.

Note
Use the enclosed metal plugs to seal unused ports. The plastic plugs mounted at delivery are not sufficient as seal!

Note
Thread sealing (PTFE) tape or paste on male threads of conduit is required to provide a water/dust tight conduit seal and to meet the required degree of ingress protection as well as to enable future removal of the plug/gland.

NPT is a standard for tapered threads. Engage the gland with 5 to 6 threads. Note that there will be a number of threads left outside the housing as illustrated in Figure 4-2.

Figure 4-2: Cable Entry with NPT Threaded Gland

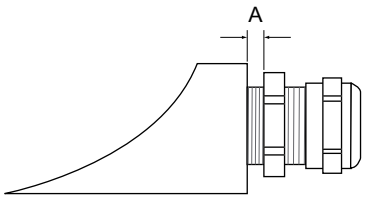

A. The NPT threaded gland leaves a number of threads outside the housing

Ensure that glands for the cable entries meet requirements for IP class 66 and 67.

4.5 Wiring diagram

Figure 4-3: Non-Intrinsically Safe HART® Output

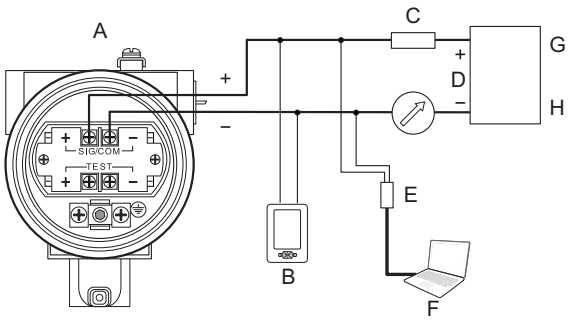

A. Rosemount 3300 Level Transmitter
B. Handheld communicator
C. Load resistance = 250 Ω
D. Power supply
E. HART modem
F. PC
G. Maximum voltage: U_m = 250 V
H. HART: U_n = 42.4 V

Note
Rosemount 3300 Level Transmitters with Flameproof/Explosion-proof HART Output have a built-in barrier; no external barrier needed.

Figure 4-4: Intrinsically Safe HART Output

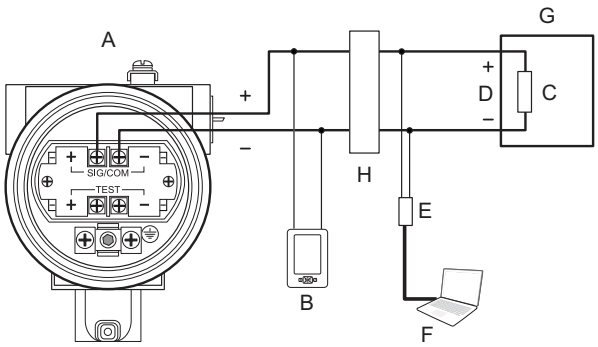

A. Rosemount 3300 Level Transmitter
B. Handheld communicator
C. R_L= 250 Ω
D. Power supply
E. HART modem
F. PC
G. DCS
H. Approved IS barrier

IS Parameters: U_i = 30 V, I_i = 130 mA, P_i = 1 W, L_i = C_i = 0

Figure 4-5: Non-intrinsically Safe Modbus® Output

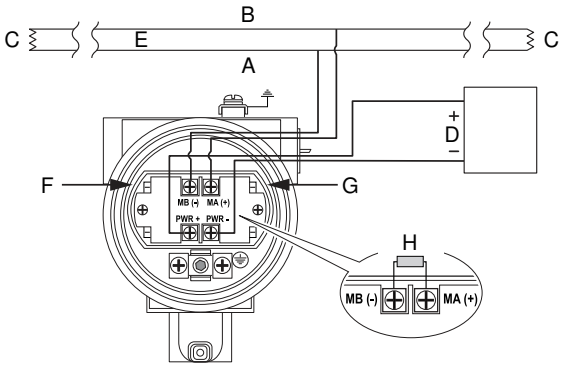

A. "A" line
B. "B" line
C. 120 Ω
D. Power supply
E. RS485 Bus
F. HART +
G. HART -
H. If the unit is the last transmitter on the bus, a 120 Ω termination resistor is required.

Note
Rosemount 3300 Level Transmitters with Flameproof/Explosion-proof Modbus Output have a built-in barrier; no external barrier needed.

4.6 Load limitations

For HART® communication, a minimum loop resistance of 250 Ω is required. Maximum loop resistance is determined by the voltage level of the external power supply, as given by the following diagrams:

Figure 4-6: Non-Hazardous Installations

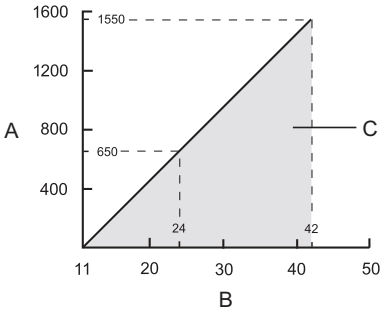

A. Loop Resistance (Ohms)
B. External Power Supply Voltage (Vdc)
C. Operating region

Figure 4-7: Intrinsically Safe Installations

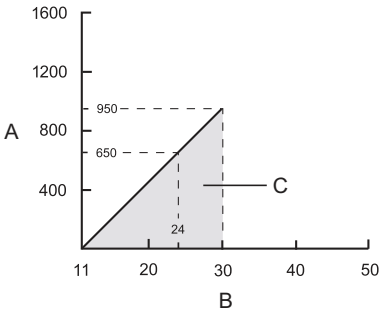

A. Loop Resistance (Ohms)
B. External Power Supply Voltage (Vdc)
C. Operating region

Figure 4-8: Explosion-proof/Flameproof Installations

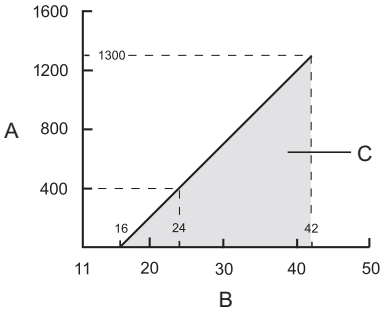

A. Loop Resistance (Ohms)
B. External Power Supply Voltage (Vdc)
C. Operating region

Note
For the Explosion-proof/Flameproof installations the diagram is only valid if the HART load resistance is at the + side, otherwise the load resistance value is limited to 300 Ω.

4.7 HART® to Modbus® converter (HMC)

4.7.1 Signal wiring

For the RS-485 bus, use shielded twisted pair wiring, preferably with an impedance of 120 Ω (typically 24 AWG) in order to comply with the EIA-485 standard and EMC regulations. The maximum cable length is 4000 ft./1200 m.

4.7.2 Power supply cabling

The power supply cables must be suitable for the supply voltage and ambient temperature, and approved for use in hazardous areas, where applicable.

4.7.3 Ground (common mode) voltage limit

± 7 V

4.7.4 Bus termination

Standard RS-485 bus termination per EIA-485

4.7.5 Connection terminals

The connection terminals are described in Table 4-1.

Table 4-1: Connection Terminals

Connector label	Description	Comment
HART +	Positive HART connector	Connect to PC with RCT software, handheld communicator, or other HART configurators.
HART -	Negative HART connector	
MA (+)	Modbus RS-485 B connection (RX/TX+)(1)	Connect to RTU
MB (-)	Modbus RS-485 A connection (RX/TX-)(1)	
PWR +	Positive power input terminal	Apply +8 Vdc to +30 Vdc (max. rating)
PWR -	Negative power input terminal	

(1) The designation of the connectors do not follow the EIA-485 standard, which states that RX/TX- should be referred to as 'A' and RX/TX+ as 'B'.

Figure 4-9: Connection Terminals for Rosemount 3300 with HART to Modbus Converter

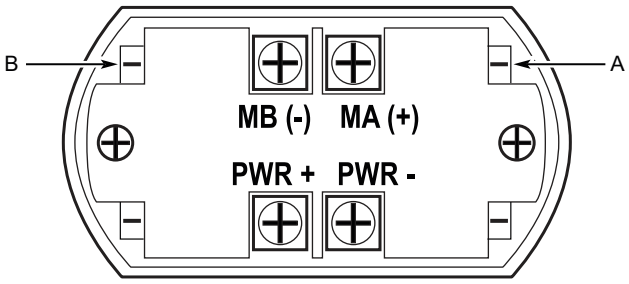

A. HART -
B. HART +

4.7.6 RS-485 bus

- The Rosemount 3300 Level Transmitter does not provide electrical isolation between the RS-485 bus and the transmitter power supply.
- Maintain a bus topology and minimize stub length.
- The RS-485 bus needs to be terminated once at each end, but should not be terminated elsewhere on the bus.

4.7.7 Installation cases

- Use common ground for Modbus Master and power supply.
- The power cables and RS-485 bus are in the same cable installation.
- A ground cable is installed and shall be used (cable size > 4 mm according to IEC60079-14, or size according to applicable national regulations and standards). A properly installed threaded conduit connection may provide sufficient ground.
- The cable shielding is grounded at master site (optional).

Note

⚠ The HART to Modbus Converter (HMC) equipped transmitter contains intrinsically safe circuits that require the housing to be grounded in accordance with national and local electrical codes. Failure to do so may impair the protection provided by the equipment.

Install the Rosemount 3300 Level Transmitter as shown in Figure 4-10. Up to 32 devices may be wired on one RS-485 bus using a multidrop wiring topology.

Figure 4-10: Multidrop Connection of Rosemount 3300 Level Transmitters

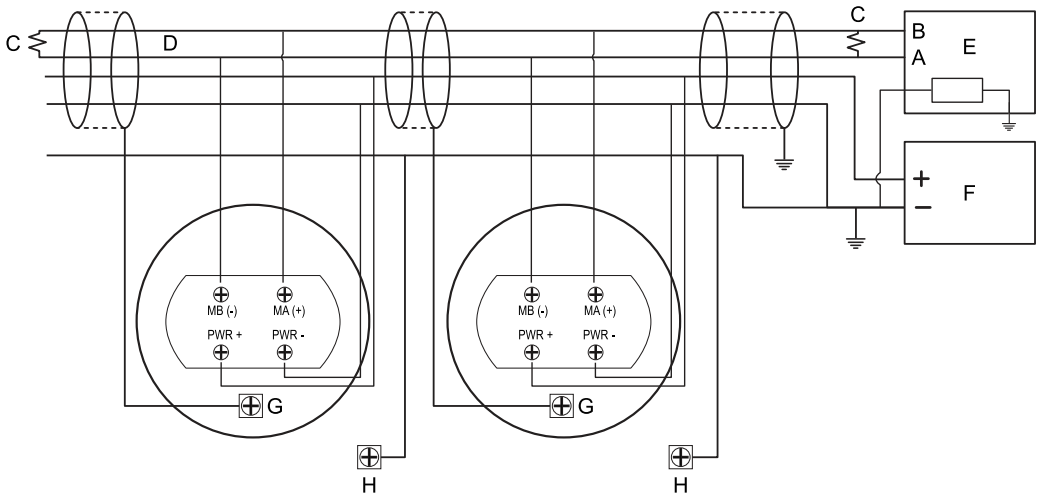

A. "A" line
B. "B" line
C. 120Ω
D. RS-485 bus
E. Modbus Master
F. Power supply
G. Internal ground screw
H. External ground screw

Alternatively, the Rosemount 3300 Level Transmitter can be installed as shown in Figure 4-11. If this wiring layout is used, there is an increased risk for communication disturbances due to differences in potential between grounding points. By using the same grounding point for Modbus Master and power supply, this risk is reduced.

Figure 4-11: Alternative Multidrop Connection of Rosemount 3300 Level Transmitters

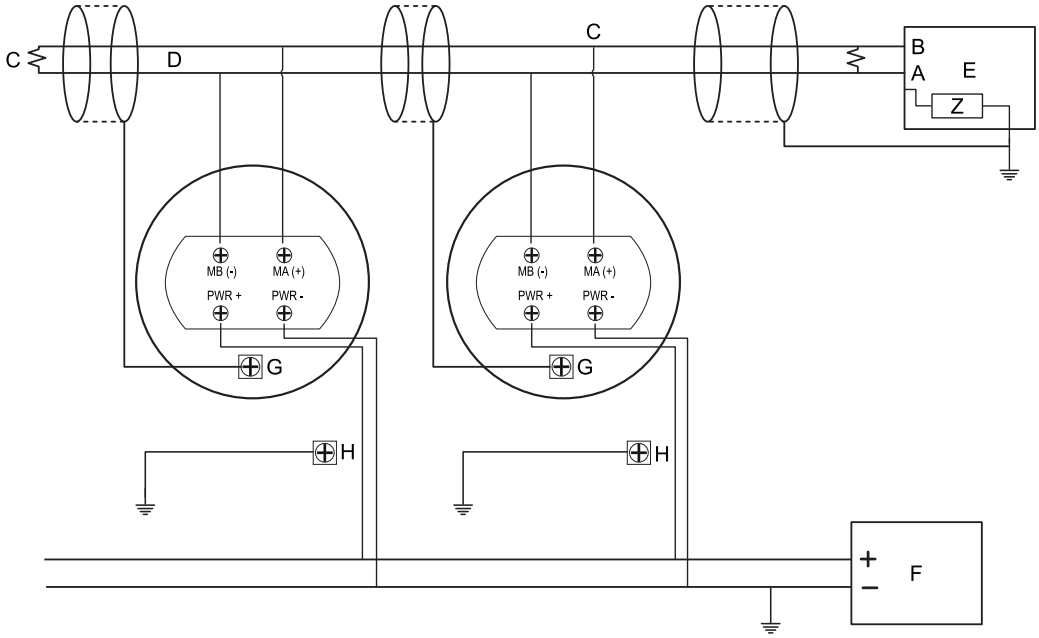

A. "A" line
B. "B" line
C. 120Ω
D. RS-485 bus
E. Modbus Master
F. Power supply
G. Internal ground screw
H. External ground screw

Star topology

For a star topology connection of the Rosemount 3300 Level Transmitter, the transmitter with the longest cable run needs to be fitted with a 120 Ω termination resistor.

Figure 4-12: Star Topology Connection of Rosemount 3300

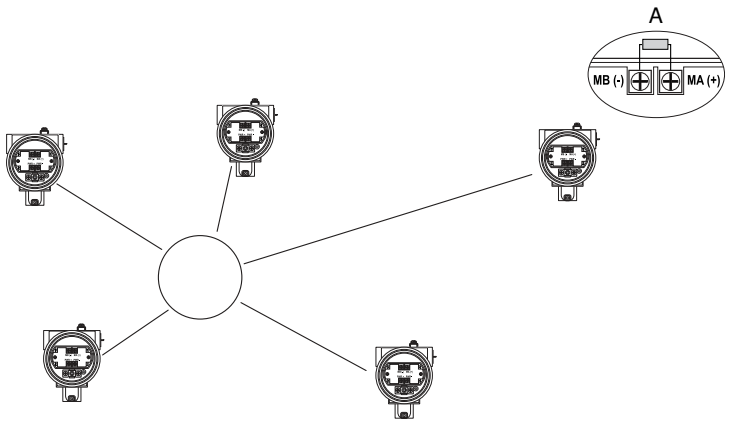

A. 120 Ω termination resistor

4.8 Connect the transmitter

Procedure

1. Make sure the housing is grounded according to Hazardous Locations Certifications, national and local electrical codes.

   Grounding is essential for Hazardous Location safety (even for Flameproof/ Explosion Proof versions). A ground cable with a cross-sectional area of ≥ 4 mm^2 must be used.
2. Verify that the power supply is disconnected.
3. Remove the cover on the terminal side (see label marked field terminals).
4. Pull the cable(s) through the cable gland/conduit.

   For Explosion-proof / Flameproof installations, only use cable glands or conduit entry devices certified Explosion-proof or Flameproof (Ex d IIC (gas) or Ex t IIIC (dust)).
5. Connect the cable wires (see Wiring diagram).
6. If applicable, use the enclosed metal plug to seal any unused port.
7. Replace the cover and tighten.
8. Tighten the cable gland.
9. Connect the power supply.

4.9 Optional devices

4.9.1 Rosemount 333 HART® Tri-Loop™

The Rosemount 3300 outputs a HART signal with four process variables. By using the Rosemount 333 HART Tri-Loop, up to three additional analog 4-20 mA outputs are provided.

Each Tri-Loop channel receives power from control room. Channel 1 must be powered for the Tri-Loop to operate.

The transmitter receives power from control room.

Figure 4-13: Example Installation of Rosemount 333 with Rosemount 3300

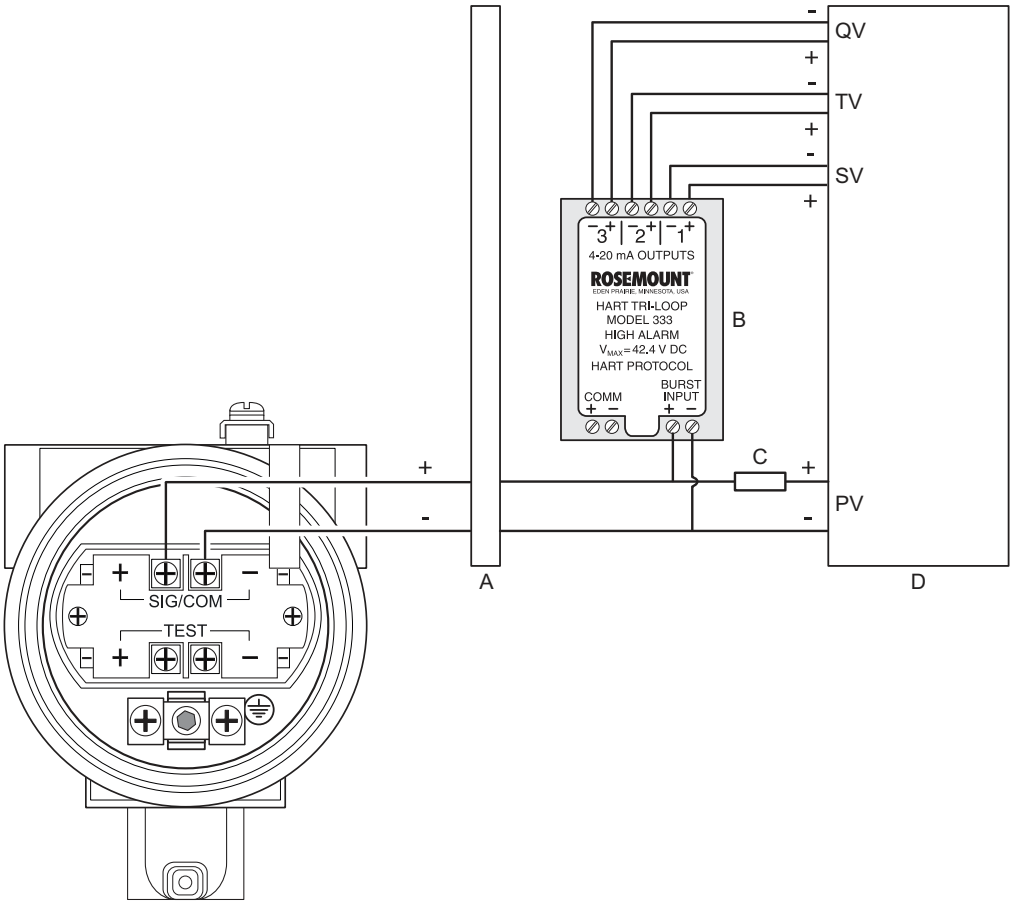

A. Approved IS barrier
B. DIN rail mounted Rosemount 333
C. Load resistance (≥250 Ω)
D. Control room

Related information

Rosemount 333 Reference Manual

4.9.2 Rosemount 751 Field Signal Indicator

Figure 4-14: Wiring Diagram for the Rosemount 3300 with Rosemount 751

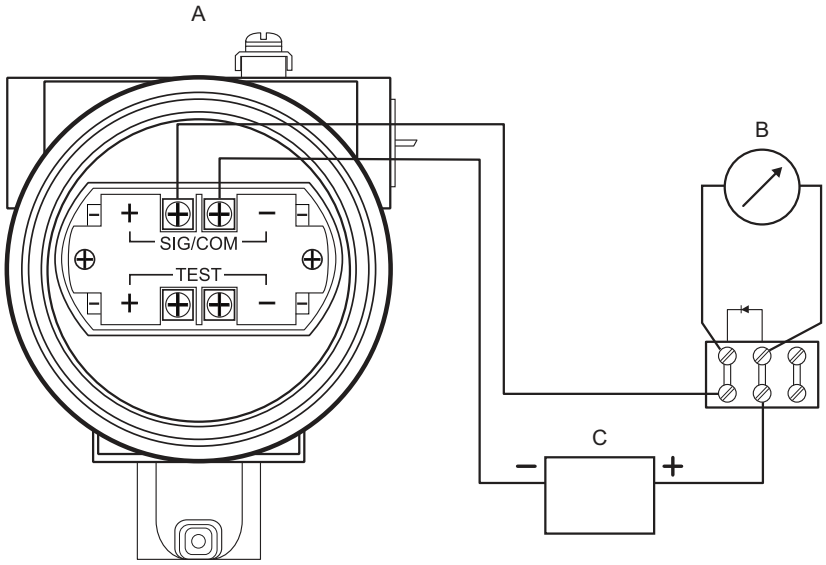

A. Rosemount 3300
B. Rosemount 751
C. Power supply

Figure 4-15: Alternative Wiring Diagram for the Rosemount with Rosemount 751

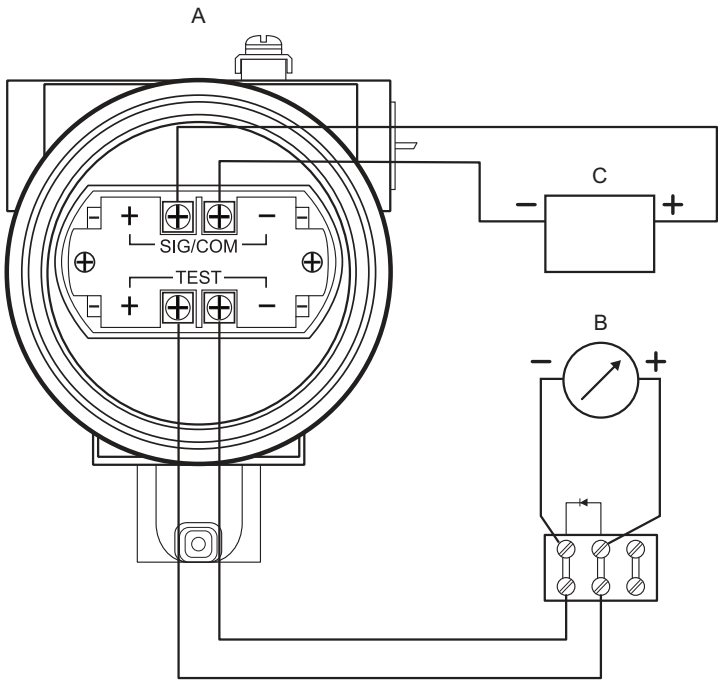

A. Rosemount 3300
B. Rosemount 751
C. Power supply

5 Configuration

5.1 Safety messages

Instructions and procedures in this section may require special precautions to ensure the safety of the personnel performing the operations. Information that potentially raises safety issues is indicated by a warning symbol (⚠). Refer to the following safety messages before performing an operation preceded by this symbol.

⚠ WARNING

Failure to follow safe installation and servicing guidelines could result in death or serious injury.

Ensure only qualified personnel perform installation or service.

Use the equipment only as specified in this manual. Failure to do so may impair the protection provided by the equipment.

Repair, e.g. substitution of components, etc. may jeopardize safety and is under no circumstances allowed.

Flamepath joints are not for repair. Contact the manufacturer.

⚠ WARNING

Explosions could result in death or serious injury.

Verify that the operating environment of the transmitter is consistent with the appropriate hazardous locations specifications.

Temperature restrictions apply for Explosion-proof versions. For limits, see certificate-specific information in the Rosemount 3300 Product Certifications document.

In an explosion-proof/flameproof installation, do not remove the transmitter covers when power is applied to the transmitter.

Eliminate the risk of Electrostatic Discharge (ESD) discharge prior to dismounting the transmitter head. Probes may generate an ignition-capable level of electrostatic charge under extreme conditions. During any type of installation or maintenance in a potentially explosive atmosphere, the responsible person should ensure that any ESD risks are eliminated before attempting to separate the probe from the transmitter head.

Before connecting a handheld communicator in an explosive atmosphere, ensure that the instruments are installed in accordance with intrinsically safe or non-incendive field wiring practices.

⚠ WARNING

Electrical shock could cause death or serious injury.

Avoid contact with the leads and terminals. High voltage that may be present on leads can cause electrical shock.

Ensure the mains power to the transmitter is off and the lines to any other external power source are disconnected or not powered while wiring the transmitter.

⚠ WARNING

Process leaks could result in death or serious injury.

Ensure the transmitter is handled carefully. If the process seal is damaged, gas might escape from the tank.

To avoid process leaks, only use the O-ring designed to seal with the corresponding flange adapter.

5.2 Overview

This chapter provides information about configuration and configuration tools. Appendix Configuration parameters provides extended information about the configuration parameters.

5.3 Establish HART® communication for transmitter with HART to Modbus® Converter

Configuration is done by sending HART commands through the HART to Modbus Converter (HMC) to the 3300 Level Transmitter electronics. To establish HART communication, connect to the MA/MB terminals, or to the HART terminals.

5.3.1 Connect to the MA/MB terminals

The Rosemount 3300 Level Transmitter can be configured with RCT using the MA (+), MB (-) terminals.

Prerequisites

An RS-485 Converter is required to connect to the transmitter.

Procedure

1. Connect the RS-485 Converter to the MA (+), MB (-) terminals.
2. Connect the power wires (or cycle power) to the transmitter.
3. Wait 20 seconds.

4. In RCT, select **Poll Address** in the drop-down list.

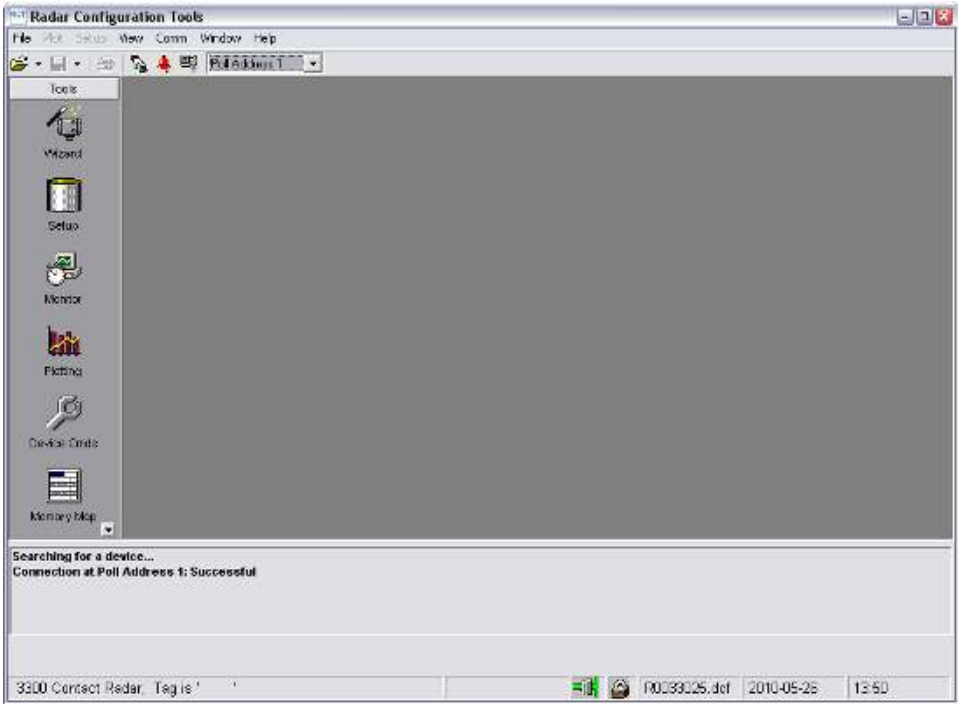

Need help?
If there are multiple 3300 Modbus units on the bus with HART address 1, it will not be possible to establish communication (by default the transmitters have HART address 1). To establish communication in this case, make sure the transmitter is alone on the bus. Disconnect or turn off power from any other devices.

5. Select the button to the left of the drop-down list to start polling.
6. After connection to the transmitter, perform the necessary configuration.
7. When the configuration is completed, disconnect the RS-485 Converter, connect the Modbus communication wires, and cycle power to the transmitter.
8. Verify communication between the transmitter and the RTU is established (can take up to 60 seconds from startup).

5.3.2 Connect to the HART terminals

To configure the Rosemount 3300 Level Transmitter, connect the communicator or PC to the HART terminals using a HART modem. Both the configuration tool and the RS-485 bus can be connected simultaneously. Configuration data is sent with HART commands through the HART to Modbus Converter (HMC) to the Rosemount 3300 Level Transmitter electronics. Note that the power supply must be connected during configuration.

Note
Measurement data is not updated to the Modbus Master when a configuration tool is connected.

5.4 Configuration using the Radar Configuration Tool

The Radar Configuration Tool (RCT) is a user-friendly software tool that allows you to configure the Rosemount 3300 Level Transmitter.

You can select either of the following two methods to configure the transmitter:

- Start the Wizard for a guided installation if you are unfamiliar with the Rosemount 3300.
- Use the Setup function if you are already familiar with the configuration process or if you just want to change the current settings.

5.4.1 Installing the Radar Configuration Tools (RCT) software

To install the RCT software:

Procedure

1. Insert the installation CD into your CD-ROM drive.
2. Follow the instructions.

Need help?
If the installation program does not automatically start, run Setup.exe from the CD.

5.4.2 Starting RCT

Prerequisites

For optimum performance set COM Port Buffers to 1.

Procedure

Select **Programs** → **Rosemount** → **RCT**.

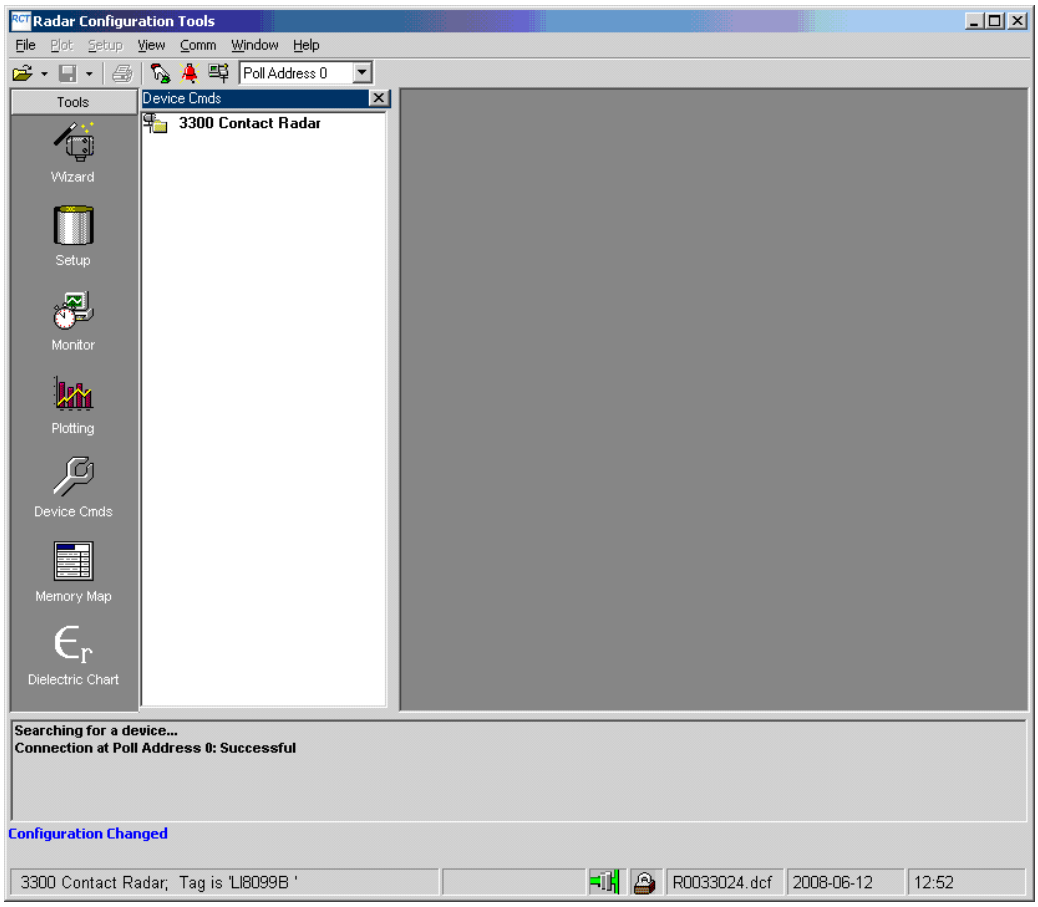

Need help?
The Help function of the RCT can be reached from the menu or by pressing the **F1** key.

5.4.3 Specify the COM port

If communication is not established, open the HART Communication Server window, and check that the right COM port is selected.

Procedure

1. Locate the HART Server icon in the lower right corner of the screen.



2. Double-click the HART Server icon.

3. Check the COM port.

Figure 5-1: Rosemount Hart Communication Software - Server Window

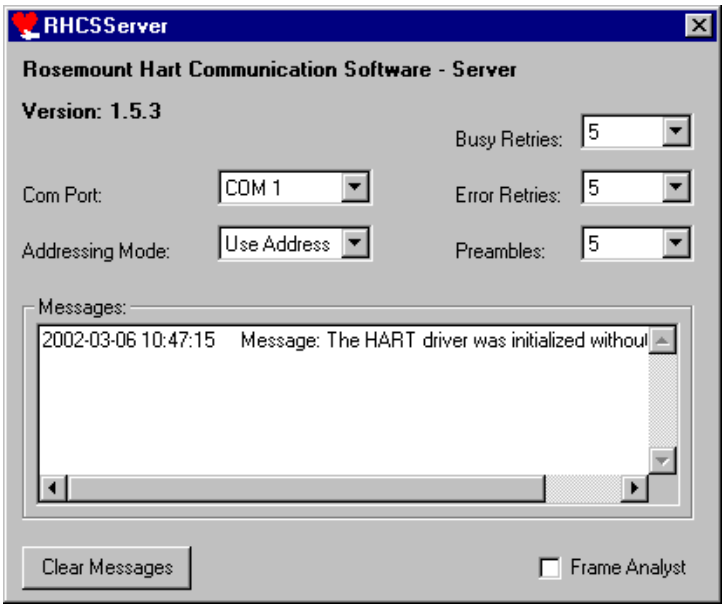

4. Select the COM Port option that matches the COM Port connected to the transmitter.
5. If communication is intermittent, increase Busy Retries and Error Retries to 5 and 5 respectively.
6. Select the **Search for a device** icon in the RCT tool bar.



5.4.4 Configuration using the Wizard

Configuration of a Rosemount 3300 Level Transmitter can be done using the installation Wizard for detailed guidance.

Procedure

1. Make sure that the ***Tools Bar*** is open (Project Bar is ticked within View). Then select the **Wizard** icon or select the **View** → **Wizard** menu option.
2. Select the **Start** button and follow the instructions.

5.4.5 Configuration using the Setup Function

If you are already familiar with the configuration procedure, or if you want to change settings, you may use the setup function.

Procedure

1. Make sure that the ***Tools Bar*** is open (Project Bar is ticked within View). Then select the **Setup** icon or select the **View** → **Setup** menu option.
2. Select the appropriate tab:
   - Info (information about the device)

- Basics
- Output
- Tank Config
- Volume (specification of tank geometry for volume calculations)
- LCD (display panel settings)
- Signal Quality Metrics (for activating/de-activating and display of signal quality metrics, available with the DA1 option)

3. To load the parameters configured in the transmitter into the dialog window, click the **Receive Page** button.
4. To load any parameter changes back to the transmitter, click the **Send Page** button.

Setup - Basics

Units

Length, volume, and temperature units can be set. Units are used wherever measurement and configuration data occur.

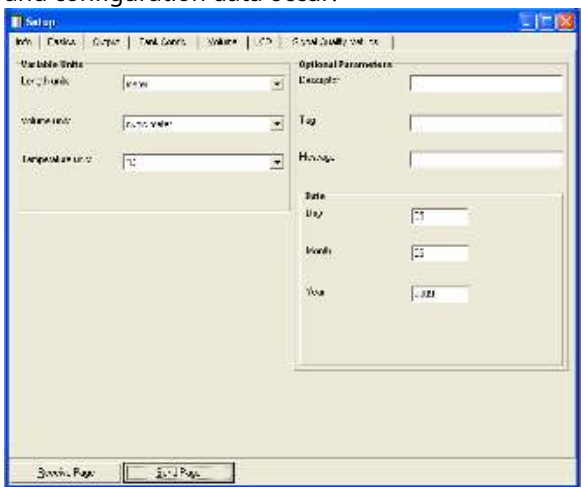

Setup - Output

Range values

The Lower Range value = 4 mA value

The Upper Range value = 20 mA value

The 4-20 mA range must not include the upper or lower Transition Zone.

Variable assignment

Rosemount 3301 available measuring parameters: Level, Distance to Level, Total Volume. For fully immersed probe: Interface Level and Interface Distance.

Rosemount 3302 available measuring parameters: Level, Distance to level, Total Volume, Interface Level, Interface Distance, and Upper Product Layer Thickness.

In the **Primary Variable** field, the measuring parameter is entered for the analog signal.

More variables can be assigned if the superimposed digital HART® signal or a HART Tri-loop™ is used.

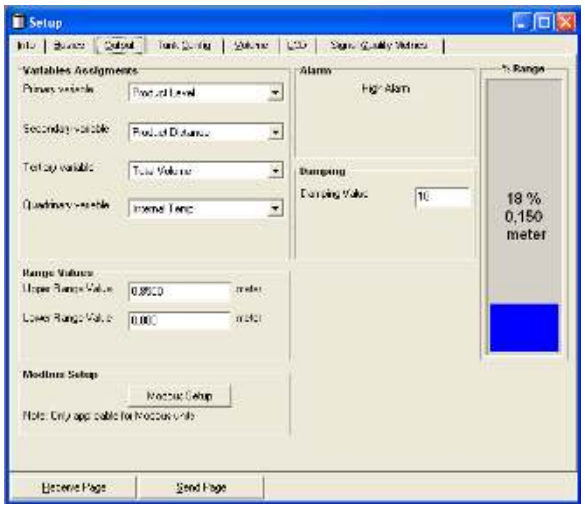

Setup - Tank Config

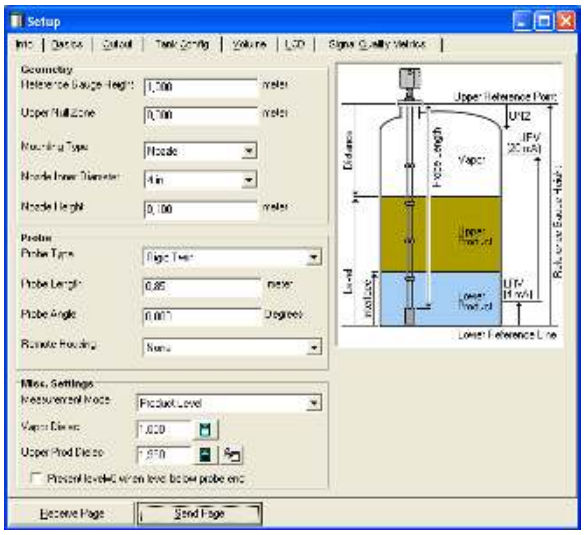

Geometry

See tank picture in window.

- Set Reference Gauge Height
- Set Upper Null Zone (if needed)
- Set Mounting Type
- Set Diameter (if Mounting Type is Nozzle or Pipe/Chamber)
- Set Nozzle Height (if Mounting Type is Nozzle)

Probe

- Set Probe Type (This parameter is pre-configured at factory.)
- Set Probe Length (This parameter is pre-configured at factory. The probe length needs to be changed if the probe is cut in field.)
- Set Probe Angle

- If Remote Housing is mounted, set the Remote Housing length (setting not available in DD/DTM™)

Miscellaneous settings

- Set Vapor Dielectric value (if needed)
- Set Upper Product Dielectric value (interface measurements only)

5.4.6 Additional configuration to fine-tune performance

To fine-tune the transmitter's performance, it is recommended the Trim Near Zone function be executed after configuration is finished.

Related information

Trim Near Zone function

5.5 Change Modbus communication parameters

5.5.1 Change Modbus communication parameters using RCT

To change the Modbus address and communication parameters in Rosemount Radar Configuration Tools (RCT):

Prerequisites

The Modbus Setup function is available in RCT version 2.03.0002 and later.

To change Modbus communication parameters, the Rosemount 3300 Level Transmitter must use HART address 1, the default address.

Procedure

1. Start RCT and connect to the transmitter.
2. In the RCT workspace Project Bar, select the **Setup** icon to open the ***Setup*** window.
3. Select the **Output** tab.

4. Select **Modbus Setup**.

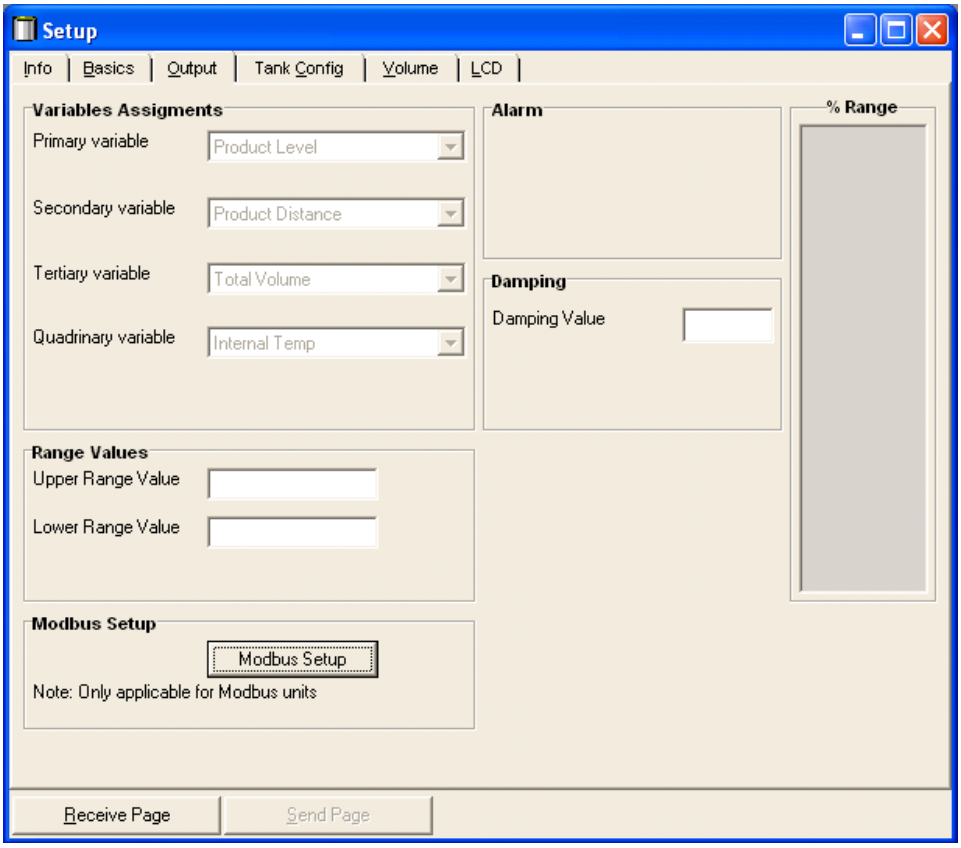

5. In the ***Modbus Setup*** window, select Modbus protocol and enter the desired Modbus address.

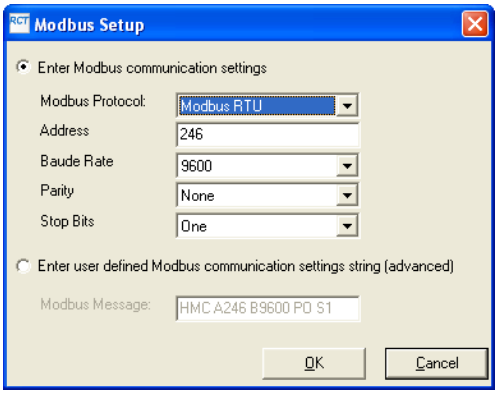

6. Enter the baud rate, parity, and stop bits, then select **OK**.

   It is also possible to enter a user-defined Modbus Message in the Modbus String area.

Postrequisites

After changing communication parameters, disconnect the HART modem and wait at least 60 seconds for the change to take effect. In case the MA (+)/MB (-) terminals are used for

connection to the HMC, disconnect the RS-485 Converter, cycle power to the transmitter and wait up to 60 seconds for the change to take effect.

Related information

Modbus communication protocol configuration

5.5.2 Change Modbus communication parameters using a handheld communicator

The Modbus communication parameters can be changed by entering a text string in the HART Message parameter.

Related information

Modbus communication protocol configuration

5.6 Configure the alarm output for the Modbus® transmitter

Prerequisites

If the Modbus communication setup has been changed, but the transmitter has not yet started to use the new configuration, then you need to disconnect the HART modem and wait up to 60 seconds for the change to take effect.

In case the MA/MB terminals are used for connection to the HART to Modbus Converter (HMC), disconnect the RS-485 Converter, cycle power to the transmitter and wait up to 60 seconds for the change to take effect.

The Modbus communication settings will otherwise be lost if you write a new message to the transmitter.

Procedure

1. Start RCT and connect to the transmitter.
2. In the RCT workspace Project Bar, select the **Setup** icon to open the ***Setup*** window.
3. Select the **Output** tab.
4. Select **Modbus Setup**.
5. Enter the Modbus Message, and then select **OK**.

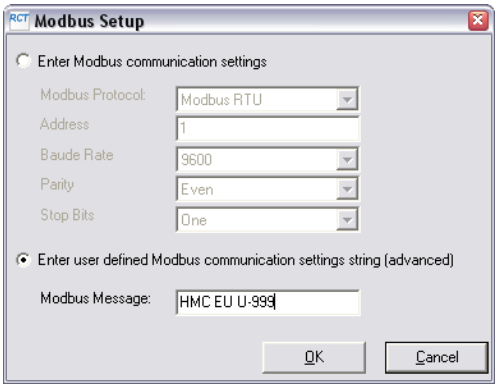

Postrequisites

After changing the Alarm Output configuration, disconnect the HART modem and wait up to 60 seconds for the change to take effect. In case the MA (+)/MB (-) terminals are used for connection to the HMC, disconnect the RS-485 Converter, cycle power to the transmitter, and wait up to 60 seconds for the change to take effect.

5.6.1 Modbus alarm output strings

Table 5-1: Available Alarm Output Text Strings

Protocol	String	Alarm output
Modbus RTU	HMC EN	Not a number (NaN), default
	HMC EF	Freeze, hold last value
	HMC EU U-0.1	User defined value, -0.1 in this example
Levelmaster	HMC M2 EH	High value, 999.99, default
	HMC M2 EL	Low value, -99.99
	HMC M2 EF	Freeze, hold last value
	HMC M2 EU U0	User defined value (range -99.99 to 999.99), 0 in this example
Modbus ASCII	HMC M1 EN	Not a number (NaN), default
	HMC M1 EF	Freeze, hold last value
	HMC M1 EU U-0.1	User defined value (range -99.99 to 999.99), -0.1 in this example

5.6.2 Verify alarm output

To verify the alarm output, simulate a device failure by removing the transmitter head.

Related information

Replace the transmitter head

5.6.3 Use status information to evaluate measurement validity

The transmitter updates status information about the current measurement, and this status information is available as a bitfield register through Modbus communication.

By monitoring the status information it is possible to determine if the current measurement output value is valid.

Related information

Common Modbus host configuration

5.6.4 Use Heartbeat to detect errors

By reading and evaluating the Heartbeat value from the device, it is possible to verify that the communication link between the transmitter, HMC, RTU and even the control system communicating with the RTU is working.

Assign Heartbeat to one of the transmitter variables (SV, TV, or QV). Heartbeat is increased by one for each measurement cycle in the device (until it eventually starts over at zero again).

In case this value is not updated, it means that the communication link is broken.

5.7 Advanced configuration

5.7.1 Set user defined upper reference point

If you want to specify your own upper reference point, you can do this by setting the Calibration Offset parameter.

Figure 5-2: User Defined Upper Reference Point

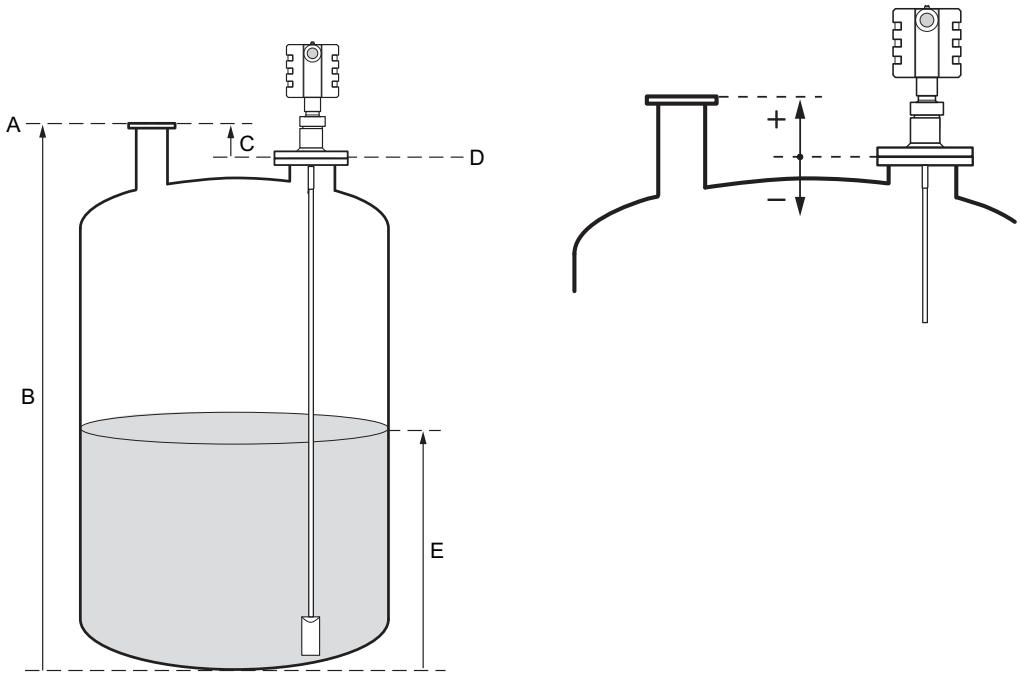

A. Upper reference point
B. Reference gauge height
C. Calibration offset
D. Transmitter reference point
E. Product level

Procedure

1. Adjust the reference gauge height to the distance from the tank bottom to the desired upper reference point.
2. Add the distance between the upper reference point and the transmitter reference point to the calibration offset value that is stored in the transmitter database.
   a) In RCT, open the **Tools** section in the project bar.
   b) Select **Device Commands** → **Basics** → **Set Calibration Offset**.

5.8 HART® multi-drop configuration

The Rosemount 3300 Level Transmitter can be run in multidrop mode. In the multidrop mode each transmitter has a unique HART address.

Figure 5-3: Multidrop Connection

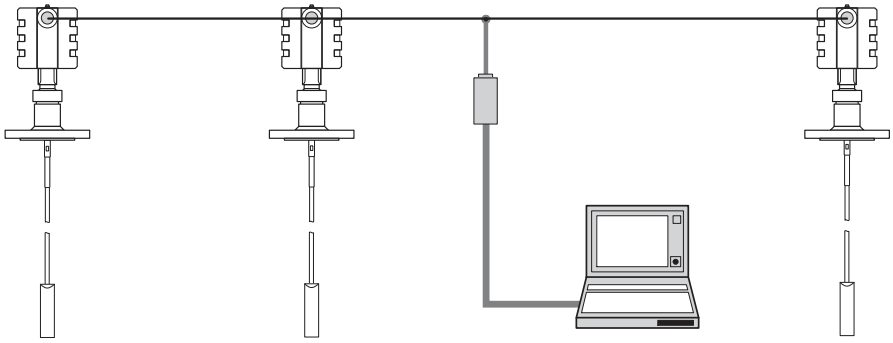

5.8.1 Change the poll address

To set the desired address for multidrop operation:

Procedure

1. In RCT, select **View** → **Device Commands**, or select the **Device Commands** icon from the Project Bar **Advanced** section.
2. Open the **Details** folder.
3. Select the **Set Poll Address** option.
4. Set the desired address.

5.9 Use with the Rosemount 333 HART® Tri-Loop™

To prepare the transmitter for use with a Rosemount 333 HART Tri-Loop, the transmitter must be configured to Burst Mode and the process variable output order must be set.

Procedure

1. Make sure the Rosemount 3300 Level Transmitter is properly configured.
2. If RCT is used for the Rosemount 3300 Series setup, it is recommended that the receive buffer and transfer buffer for the selected COM port are adjusted.

   Otherwise, Burst Mode cannot be turned off by RCT.
3. In RCT, select **Setup** → **Output** and assign transmitter variables primary variable, secondary variable etc.
4. Select **Setup** → **Basics** and configure the variable units (length, volume, and temperature).
5. Set the Rosemount 3300 in Burst Mode.

   Select **Device Commands** → **Details** → **Set Burst Mode**.
6. Select **Burst option 3 = Process variables and current (Process vars/crnt)**.
7. Prior to exiting the configuration, note the selected variables for SV, TV, and QV, and the units set for each of the variables. The same configuration must be used for the Rosemount 333.

Related information

Rosemount 333 Reference Manual

5.9.1 Set the COM port buffers in Windows XP

The receive and transfer buffers need to be adjusted to be able to communicate with the Rosemount 3300 in Burst Mode.

Procedure

1. In the MS Windows™ Control Panel, open the **System** option.
2. Select the **Hardware** tab and then select the **Device Manager** button.
3. Expand the **Ports** node in the tree view.
4. Right-click on the selected COM port and select **Properties**.
5. Select the **Port Settings** tab and then select the **Advanced** button.
6. Drag the Receive Buffer and Transfer Buffer slides to 1.
7. Select the **OK** button.
8. Reboot the computer.

5.9.2 Set the COM port buffers in Windows 7, 8, or 8.1

The receive and transfer buffers need to be adjusted to be able to communicate with the Rosemount 3300 in Burst Mode.

Procedure

1. In the **Start** menu, select **Control Panel** → **System and Security** → **System** → **Device Manager**.
2. Double-click **Ports (COM & LPT)**.
3. Right-click on the selected COM port and select **Properties**.
4. Select the **Port Settings** tab and then select the **Advanced** button.
5. Drag the Receive Buffer and Transmit Buffer to 1.
6. Click **OK**.
7. Restart the computer.

6 Operation

6.1 Display functionality

The Rosemount 3300 Level Transmitter uses the display for presentation of measurement variables. The display has two rows. The upper row with five characters is for the measured value, and the lower row with six characters is for the value name and measurement unit. The display toggles between the different variables every two seconds.

Figure 6-1: Presentation of Measurement Data

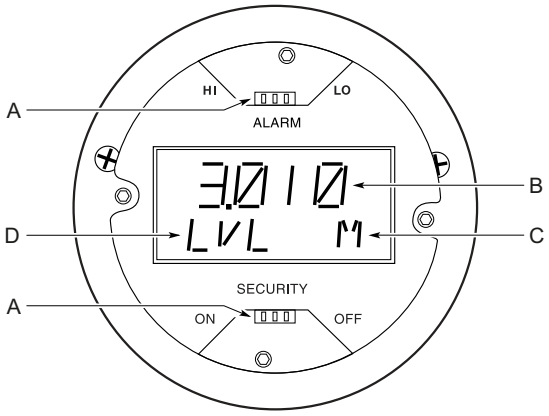

A. Jumpers for alarm and write protection settings
B. Measurement value
C. Measurement unit
D. Measurement variable

6.1.1 Variable screens

The transmitter can display the following variables:

Table 6-1: Display Parameters

Parameter	Description
Level	Level Product level
Distance	Distance from the upper reference point to the product surface
Volume	Total product volume
Internal Temp	Temperature inside the transmitter housing
Interface Distance	Distance between the upper reference point and the interface between the upper and lower product
Interface Level	Level of the lower product
Interface Thickness	Thickness of the upper product
Amplitude Peak 1	Signal amplitude of the reflected signal from the reference peak
Amplitude Peak 2	Signal amplitude of the reflected signal from the product surface
Amplitude Peak 3	Signal amplitude of the reflected signal from the surface of the bottom product (interface measurements)
Percent Range	Level value in percent of total measurement range
Analog Out Current	4 -20 mA current
Signal Quality	Information on signal quality
Surface/Noise Margin	Information on surface/noise margin

6.2 Error messages

The display can also be used for presentation of software errors. The upper row shows error codes and the lower row shows 'ERROR'.

Figure 6-2: Presentation of Error Messages

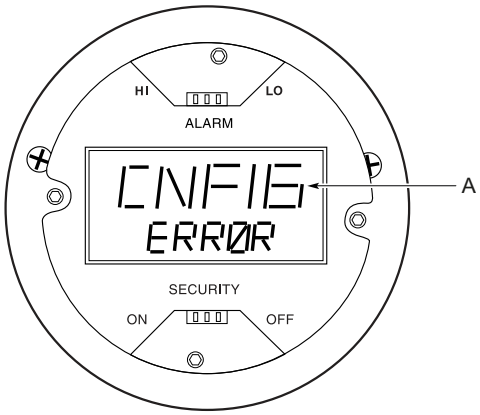

A. Error code

7 Service and troubleshooting

7.1 Safety messages

Instructions and procedures in this section may require special precautions to ensure the safety of the personnel performing the operations. Information that potentially raises safety issues is indicated by a warning symbol (⚠). Refer to the following safety messages before performing an operation preceded by this symbol.

⚠ WARNING

Failure to follow safe installation and servicing guidelines could result in death or serious injury.

Ensure only qualified personnel perform installation or service.

Use the equipment only as specified in this manual. Failure to do so may impair the protection provided by the equipment.

Repair, e.g. substitution of components, etc. may jeopardize safety and is under no circumstances allowed.

Flamepath joints are not for repair. Contact the manufacturer.

⚠ WARNING

Explosions could result in death or serious injury.

Verify that the operating environment of the transmitter is consistent with the appropriate hazardous locations specifications.

Temperature restrictions apply for Explosion-proof versions. For limits, see certificate-specific information in the Rosemount 3300 Product Certifications document.

In an explosion-proof/flameproof installation, do not remove the transmitter covers when power is applied to the transmitter.

Eliminate the risk of Electrostatic Discharge (ESD) discharge prior to dismounting the transmitter head. Probes may generate an ignition-capable level of electrostatic charge under extreme conditions. During any type of installation or maintenance in a potentially explosive atmosphere, the responsible person should ensure that any ESD risks are eliminated before attempting to separate the probe from the transmitter head.

Before connecting a handheld communicator in an explosive atmosphere, ensure that the instruments are installed in accordance with intrinsically safe or non-incendive field wiring practices.

⚠ WARNING

Electrical shock could cause death or serious injury.

Avoid contact with the leads and terminals. High voltage that may be present on leads can cause electrical shock.

Ensure the mains power to the transmitter is off and the lines to any other external power source are disconnected or not powered while wiring the transmitter.

⚠ WARNING

Process leaks could result in death or serious injury.

Ensure the transmitter is handled carefully. If the process seal is damaged, gas might escape from the tank.

To avoid process leaks, only use the O-ring designed to seal with the corresponding flange adapter.

7.2 Diagnostic messages

7.2.1 View diagnostic messages

Procedure

1. Select the **Read Gauge Status** icon in the toolbar at the top of the RCT workspace.
2. Open the **Tools** section in the RCT workspace project bar and select the **Device Cmds** icon, or select the **Device Commands** option from the **View** menu.
3. Open the folder named **Diag** and double-click the **Read Gauge Status** option.

7.2.2 Errors

Error messages are shown on the Integral Display, on the handheld communicator, or in the RCT software. Errors normally result in an analog output alarm, and are indicated in RCT by the message “Transmitter Malfunction”.

Figure 7-1: Transmitter Malfunction



Invalid configuration

LCD error code

CNFIG

Cause

At least one configuration parameter is outside the allowed range.

Note
The default values are used until the problem is solved.

Recommended actions

1. Load default database and restart the transmitter.
2. If the condition persists, contact your local Emerson representative.

RAM failure

LCD error code

00001

Cause

RAM failure was detected during startup test. The transmitter performs an immediate reset.

Recommended actions

Contact your local Emerson representative.

FPROM failure

LCD error code

00002

Cause

FPROM failure was detected during startup test. The transmitter performs an immediate reset.

Recommended actions

Contact your local Emerson representative.

Waveform acquisition failure

LCD error code

00006

Cause

This error is probably caused by hardware failure.

Recommended actions

Contact your local Emerson representative.

EEPROM factory checksum

LCD error code

00007

Cause

Checksum error in the factory configuration parameters. Can be caused by power failure during configuration or by hardware error.

Note
The default values are used until the problem is solved.

Recommended actions

Contact your local Emerson representative.

EEprom user checksum error

LCD error code

00008

Cause

Caused by error in the User Configuration parameters. Can be caused by power failure during configuration or by hardware error.

Note
The default values are used until the problem is solved.

Recommended actions

1. Load default database and restart the transmitter.
2. If the condition persists, contact your local Emerson representative.

Software error

LCD error code

00010

Cause

An error has been detected in the transmitter software.

Recommended actions

Contact your local Emerson representative.

Probe failure

LCD error code

00013

Cause

Probe is not detected.

Recommended actions

Check that the probe is correctly mounted.

7.2.3 Warnings

Warning messages are shown on the Integral Display, on the handheld communicator, or in the RCT software. Warnings are less serious than errors, and in most cases do not result in analog output alarms. The warnings are indicated by a message at the bottom of the RCT workspace.

Reference peak not found

Cause

- Reference peak immersed in high dielectric liquid
- Wrong threshold level T1
- Hardware error

Recommended actions

1. View the waveform plot and check amplitude threshold T1.
2. Check that the tank is not overfull.

No level peak is found

Cause

- Wrong threshold level T2
- Liquid level in transition zone or below probe end

Recommended actions

View the waveform plot and check amplitude threshold T2.

Interface peak not found

Cause

- Wrong threshold level T3
- Interface level too close to the upper product level
- No level peak detected

Recommended actions

View the waveform plot and check amplitude threshold T3.

Internal temperature out of range

Cause

The temperature of the electronics board has exceeded the transmitter's operating range.

Recommended actions

Contact your local Emerson representative.

Volume computation warning

Cause

- Volume configuration error
- Strapping table error

Recommended actions

1. Check that the correct tank type is selected for volume configuration.
2. Check that the tank dimensions for volume are correct.
3. If strapping table is used, check the level vs. volume points.

Immersed probe

Cause

- Wrong threshold level T4
- Reference peak immersed in liquid

Recommended actions

View the waveform plot and check amplitude threshold T4.

7.3 Troubleshooting guides

If there is a malfunction despite the absence of alerts, follow the procedures described in the appropriate troubleshooting guide. Under each of the symptoms, specific suggestions for solving problems are offered.

7.3.1 Troubleshooting incorrect level readings

Interface Level is reported as Not A Number (NAN)

Both P2 and P3 are detected but Interface Level is reported as Not A Number (NAN) in the waveform plot.

Possible cause

Measurement Mode is set to “Level Only”.

Recommended actions

Set Measurement Mode to “Level and Interface”.

Level and interface level are reported as NAN

Possible cause

Probe is not connected

Recommended actions

Use the command “Read Gauge Status” and check if error “Probe Failure” is active. If this is the case, check the probe connection.

Interface level is equal to the product Level

Both P2 and P3 are detected but the interface level is equal to the product Level.

Possible cause

- P3 is identified as a double bounce.
- P2 and P3 are very close.

Recommended actions

Adjust thresholds T2 and T3.

Level is incorrectly reported as full or empty

P2 is detected but level is incorrectly reported as full or empty.

Recommended actions

Use the command “Read Gauge Status” and check if the warning “Probe Immersed” is active. If this is the case:

a) Check that the transmitter is configured with correct probe type

b) Check that the reference peak (P1) is below amplitude threshold T4. If not, adjust T4 to an appropriate value.

Reference peak is not detected

Possible cause

- The tank is full.
- The transmitter is configured with wrong probe type.
- Amplitude Threshold T1 is not correct.

Recommended actions

1. Check the product level.
2. Check that the correct probe type is configured.
3. Check amplitude threshold T1.

Level accuracy seems off

Possible cause

Configuration error

Recommended actions

1. Check the reference gauge height parameter.
2. Check status information and diagnostic information.

7.3.2 There is no HART communication (lost device communication)

Recommended actions

1. Verify power supply voltage is adequate at signal terminals.
2. Check load resistance (250 ohms minimum).
3. Check if device is at an alternate HART address.
4. Check current analog output value to verify that device hardware works.

7.3.3 Troubleshooting the HART® to Modbus® Converter

No communication on RS-485 bus (MA, MB)

Recommended actions

1. Check that the cables are connected.
2. Check that PWR+ is connected to + and PWR- is connected to - on the power supply.
3. Ensure the Rosemount 3300 Level Transmitter is supplied with 8-30 Vdc (max. rating).
4. Try alternating MA/MB if you are unsure of the polarity.
5. If an RS-485 converter is used, make sure it is properly installed and configured.
6. The last Rosemount 3300 Level Transmitter may need a terminating 120Ω resistor connected between MA and MB.

No communication in RCT using HART+, HART-

Recommended actions

1. Verify the HART modem is properly connected.
2. Check if device is at an alternate HART address (default 1).

No communication in RCT using MA, MB

Recommended actions

1. Check if device is at an alternate HART address (default 1).
2. Cycle the power and wait 20 seconds before polling.

Related information

No communication on RS-485 bus (MA, MB)

No communication with Modbus RTU protocol

Recommended actions

1. Make sure the Modbus communication protocol configuration is done properly.
2. Make sure the Modbus RTU address is unique on the bus.
3. Cycle the power and try to connect.
4. Check the RTU communication settings.

Related information

No communication on RS-485 bus (MA, MB)
Modbus communication protocol configuration

No communication with Modbus ASCII protocol

Recommended actions

1. Make sure the Modbus communication protocol configuration is done properly.
2. Make sure the Modbus ASCII address is unique on the bus.
3. Cycle the power, waiting 40 seconds before communication begins.
4. Check the RTU communication settings.

Related information

No communication on RS-485 bus (MA, MB)
Modbus communication protocol configuration

No communication with Levelmaster protocol

Recommended actions

1. Make sure the Modbus communication protocol configuration is done properly.
2. Make sure the Levelmaster address is unique on the bus.
3. Cycle the power, waiting 40 seconds before communication begins.
4. Check the RTU communication settings.

Related information

No communication on RS-485 bus (MA, MB)

Modbus communication protocol configuration

7.3.4 Analog out is set in alarm

Recommended actions

Use the command “Read Gauge Status” to check active errors.

7.3.5 Integral display does not work

Recommended actions

1. Check the display configuration.
2. Check loop power.
3. Check display connection.

7.4 Service and troubleshooting tools

7.4.1 Waveform plot function

The Radar Configuration Tool (RCT) has powerful tools for advanced troubleshooting. By using the Waveform Plot function, you get an instant view of the tank signal. Measurement problems can be solved by studying the position and amplitude of the different peaks.

Figure 7-2: Waveform Plot

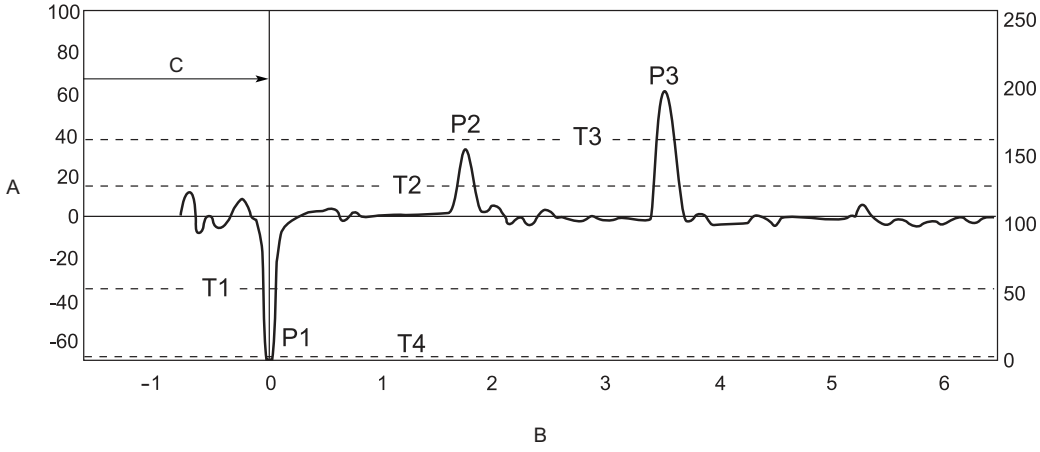

A. Amplitude
B. Distance
C. Upper Null Zone

Echo peaks

In a typical measurement situation the following peaks appear in the diagram:

P1 - Reference peak

This peak is caused by the transition between transmitter head and probe. It is used by the transmitter as a reference at level measurements.

P2 - Product surface peak

This peak is caused by a reflection on the product surface. In Measurement Mode = Interface when Immersed Probe however, P2 indicates the interface since the surface of the upper product is ignored.

P3 - Interface or probe end peak

This peak is caused by reflection on the interface between an upper product and a bottom product with a relatively high dielectric constant. It may also be caused by the probe end if there is no product above. This peak is shown when the transmitter is in Measurement Mode = Level & Interface.

Amplitude thresholds

Different amplitude thresholds are used in order to filter out unwanted signals. The following amplitude thresholds are used for the Rosemount 3300 Level Transmitter:

T1 - Reference threshold

Amplitude threshold for detection of the reference peak P1.

T2 - Surface threshold

Amplitude threshold for detection of the product level peak P2.

T3 - Interface threshold

Amplitude threshold for detection of the interface level peak P3.

T4

Amplitude threshold that is used to detect whether the probe is fully immersed in the upper product or not.

Plot the measurement signal

Procedure

1. Start the RCT program.
2. Select **View** → **Plotting**, or select the **Plotting** icon in the RCT workspace (**Tools** page at the left side of the workspace).
3. Select the **Read** button.

Log and save the waveform plot to disk

The waveform plot can be automatically logged and saved to file by specifying the read plot interval and the number of plots to log. For each new file, the corresponding number is appended to the end of the file name.

Procedure

1. Select the **Read Plot Interval** 10,00 min button and enter a time interval.

   The Read Plot Interval specifies the time interval between plots that are saved to disk.

   #### Example

   For example, type 10 if you want the waveform plot to be updated every ten minutes.

2. Select the **Number of plots** 100 ... button and specify the maximum number of plot files.

   The default value is 100.

3. Make sure that **Read Action** type is set to **Multiple Read**. Otherwise, RCT will only save one log file.

4. Select the **Start disk logging** button to start the log.

Figure 7-3: Disk Logging Waveform Plot

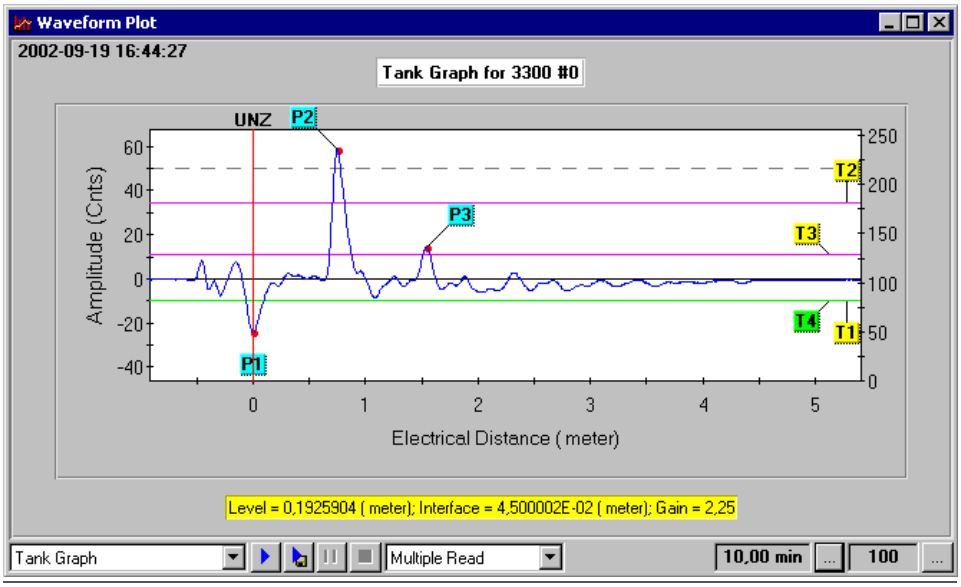

5. Select a destination folder and enter a file name.

7.4.2 Amplitude thresholds

Measurement with the Rosemount 3300 is based on the fact that the radar signal pulses are reflected by the product surface and the interface between two liquids. Signal amplitude thresholds are used to separate the measurement signal from disturbing echoes and noise.

The transmitter uses certain criteria to decide which type of pulse that is detected. For example, counting from the top of the tank, the first echo found above the Surface Threshold is considered as the product surface, as illustrated in Figure 7-4. Other pulses further away from the top, although above the Surface Threshold, are ignored. When the surface echo is found, the next pulse below the product surface and with a signal strength above the Interface Threshold, is considered as the Interface.

Figure 7-4: Threshold Principle

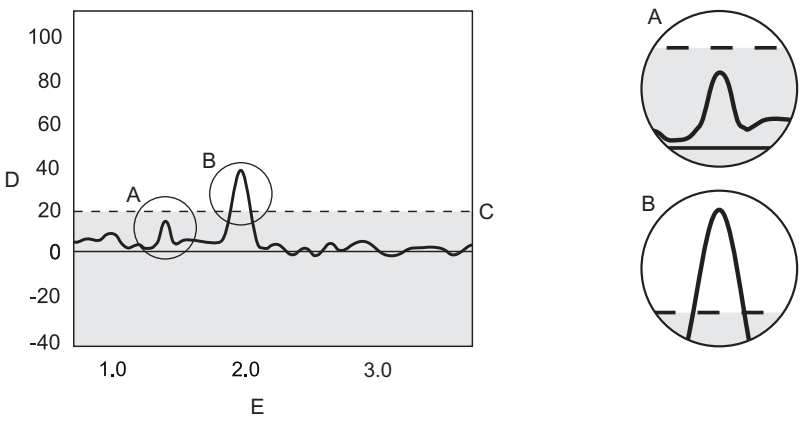

A. The echo peak is below the threshold (dotted line) and is suppressed by the device.
B. This echo peak is interpreted as the product surface, since it is the first peak closest to device that is above the surface threshold.
C. Threshold
D. Amplitude
E. Distance

By default, the amplitude thresholds are automatically adjusted to appropriate values in order to filter out noise and other non-valid measurements from the measurement signal. The configured Upper Product Dielectric Constant is used for setting the automatically calculated amplitude thresholds. Normally no other threshold adjustment is needed. But if the transmitter still does not track for example the product surface, it may be necessary to manually adjust the thresholds.

Guidelines for setting the amplitude thresholds

Normally, the amplitude thresholds are automatically set by the transmitter, and no manual settings are needed. However, due to the properties of the product, it may in rare cases be necessary to adjust the amplitude thresholds for optimum measurement performance.

- The thresholds T2 and T3 should be set to about 50% of the measured signal amplitude for the product surface and the interface peaks, respectively.
- Amplitude thresholds should not be set to values less than 3.
- If possible, T3 should be higher than T2.

Adjust the amplitude thresholds

Prerequisites

Note
Before changing the amplitude thresholds, check that the Upper Product Dielectric Constant parameter is set as accurately as possible. The Upper Product Dielectric Constant is used for setting the automatically calculated amplitude thresholds.

Procedure

1. Start RCT.
2. Select the **Device Commands** option from the **View** menu.

3. Open the **Details** folder.
4. Select the **Set Nominal Thresholds** option.

Note
Default amplitude thresholds can be set by typing 0 as the new threshold value.

Example 1: Product surface peak not found

If the transmitter does not track the product surface correctly, it may be necessary to adjust the threshold values. In Figure 7-5, the Surface Threshold is too high and as a result the product level will not be detected. In a situation like this, the Surface Threshold has to be lowered so that the surface peak is not filtered out.

Figure 7-5: Surface Threshold Is Too High

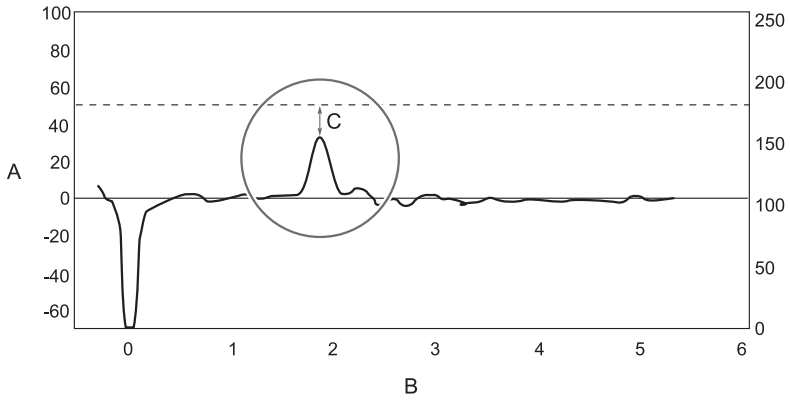

A. Amplitude
B. Distance
C. Surface Threshold is above the Product Surface peak.

If there are disturbing objects in the tank, the Surface Threshold must be carefully set to avoid locking on the wrong amplitude peak. In Figure 7-6, the Surface Threshold is too low, and as a result the transmitter has locked on a peak above the actual product surface. A disturbance was interpreted as the product surface, since this was the first amplitude peak closest to device that went above Surface Threshold. The actual product surface was interpreted as the interface or the probe end.

Figure 7-6: Surface Threshold Is Too Low

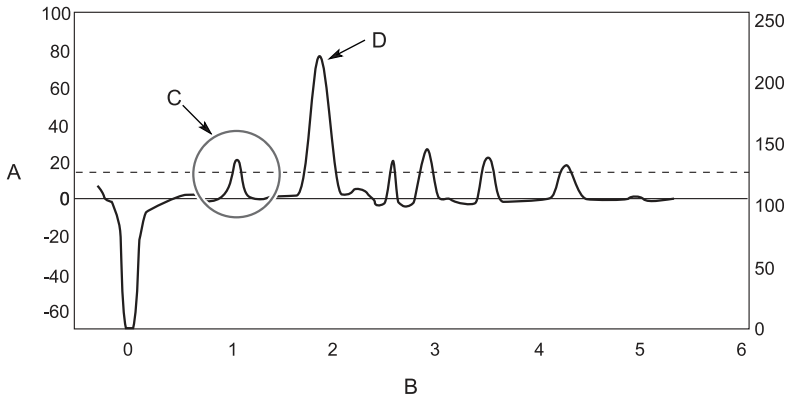

A. Amplitude
B. Distance
C. Disturbing echo misinterpreted as product surface
D. Actual product surface

By adjusting the Surface Threshold the product surface is properly detected as illustrated in Figure 7-7.

Figure 7-7: Echo Curve Plot after Surface Threshold Was Adjusted

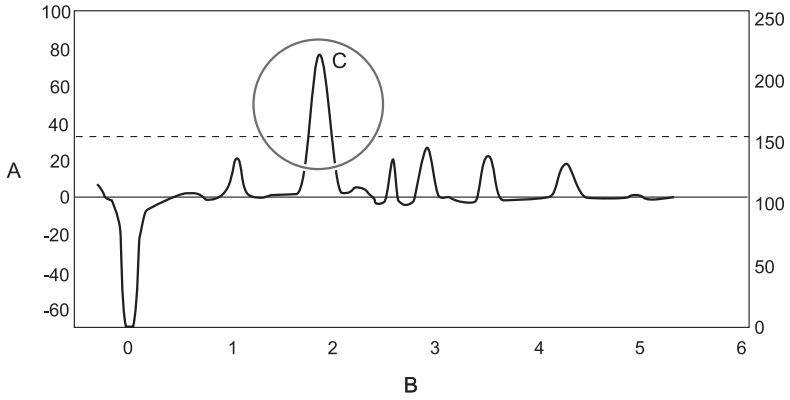

A. Amplitude
B. Distance
C. After Surface Threshold is adjusted the product surface is correctly detected.

Example 2: Interface peak not found

In interface applications where the bottom product has a relatively low dielectric constant (<40), or if the signal is attenuated in the upper product, the amplitude of the reflected signal from the interface is relatively low and difficult for the transmitter to detect. In such a case it may be possible to detect the reflected signal from the interface if the Interface Threshold is adjusted.

Figure 7-8 illustrates a situation where the Interface Threshold is too high. The signal amplitude peak at the interface between the upper and lower products is not detected in this case.

Figure 7-8: Echo Curve Plot Indicating that the Interface Threshold for the Interface Peak Is Too High

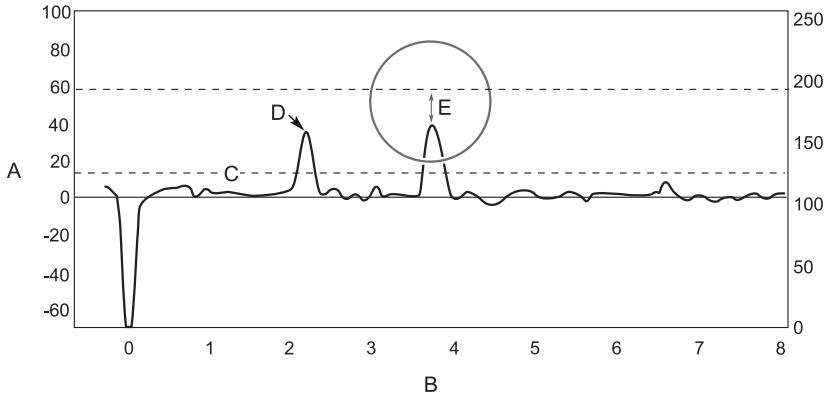

A. Amplitude
B. Distance
C. Surface Threshold
D. Product Surface Peak
E. The Interface Threshold is above the Interface Peak.

By adjusting Interface Threshold, the peak at the interface between the upper and lower products is detected as illustrated in Figure 7-9.

Figure 7-9: After Changing the Interface Threshold the Transmitter Detects the Interface

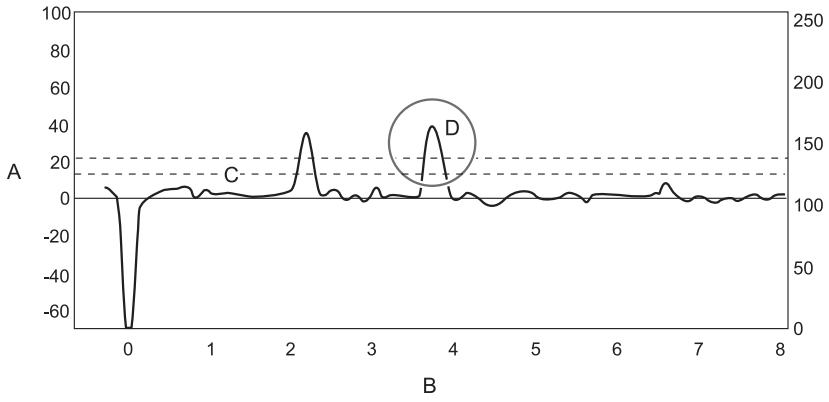

A. Amplitude
B. Distance
C. Surface Threshold
D. After Interface Threshold is adjusted the interface is correctly detected.

7.4.3 Calibrate analog output

Procedure

1. Start RCT and make sure the transmitter communicates with the PC.
2. Under **Tools**, select the **Device Cmds** icon, or select the **Device Commands** option from the **View** menu.
3. Open the folder named **Diag** and double-click the **Fixed Current Mode** option.

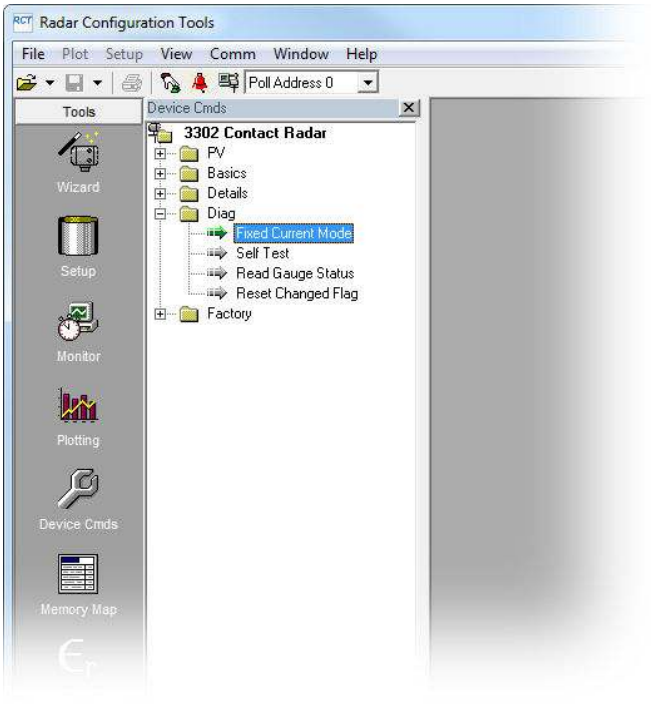

4. Set the output current to 4 mA.

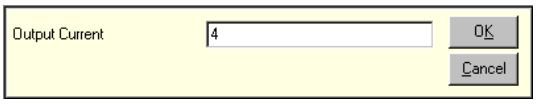

5. Measure the output current.
6. Open the folder named **Details**.
7. Select the **Trim DAC Zero** option and enter the measured output current.
8. In the **Diag** folder, double-click the **Fixed Current Mode** option, and set the output current to 20 mA.
9. Measure the output current.
10. In the **Details** folder double-click the **Trim DAC Gain** option, and enter the measured output current.
11. In the **Diag** folder double-click the **Fixed Current Mode** option, and set the output current to 0 mA in order to leave the **Fixed Current Mode**.

7.4.4 Calibrate distance and level

Prerequisites

Ensure that:

- The product surface is calm.
- The tank is not being filled or emptied.

A complete calibration is performed in two steps:

Procedure

1. Calibrate distance measurement by adjusting the calibration offset parameter.
2. Calibrate level measurement by adjusting the reference gauge height.

Calibrate distance

Procedure

1. Measure the actual distance between the upper reference point and the product surface.

Figure 7-10: Distance Calibration

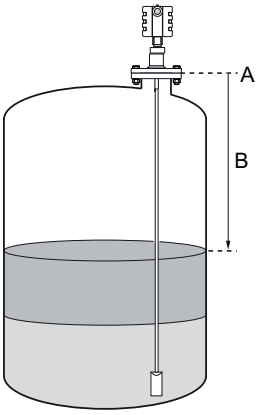

A. Upper reference point
B. Distance

2. Adjust the calibration offset so that the distance measured by the transmitter corresponds to the actual distance.
   a) In RCT, open the **Tools** section in the project bar.
   b) Select **Device Commands** → **Basics** → **Set Calibration Offset**.

Calibrate level

Procedure

1. Measure the actual product level.

Figure 7-11: Distance and Level Calibration

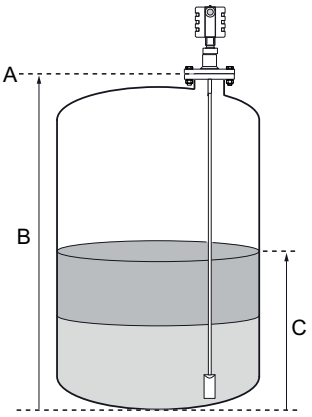

A. Upper reference point
B. Reference gauge height
C. Level

2. Adjust the reference gauge height so that the measured product level corresponds to the actual level.

7.4.5 Logging measurement data

Procedure

1. Select the **Monitor** icon in the RCT workspace, or select the **Monitor** option from the **View** menu.

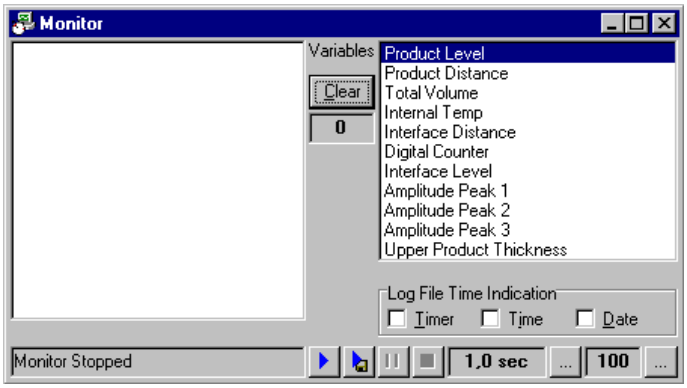

2. Select the desired variables to be monitored and select the **Start Monitor** button.

Save the log to disk

Procedure

1. Select the desired variables to be monitored.

2. Select the **Log interval** 1,0 sec ... button and enter a time interval.

   Example

   For example, type 10 if you want data to be logged in every tenth second.

3. Select the **Counter** 100 ... button and enter the maximum number of files to be stored.
4. Select the desired options for timer, time, and date.

   By selecting a check-box, the corresponding time indication is stored for each log entry in the log file.

5. Select the **Start disk logging** button.
6. Select a destination folder and enter a file name.

Counter

The Counter is used to limit the amount of data stored on the hard disk. Each time the maximum number of entries in a log file is reached, the current log file is saved and a new file is created. This procedure continues up to the maximum number of files given by the counter value. The file size is limited to 60,000 entries which can easily be handled by spreadsheet programs like MS Excel.

7.4.6 Saving the transmitter configuration

The RCT offers different methods to save the current transmitter configuration:

- Save only the configuration specified in the **Setup** window.
- Use the more extensive function in the **Memory Map** window.

You can use a stored configuration file as a backup of the current configuration, or it can be distributed for service purposes.

Save the current transmitter setup

Procedure

1. Select the **Setup** icon in the RCT workspace, or select the **Setup** option from the **View** menu to open the ***Setup*** window.

2. Right-click and select the **Receive All** option, or from the **Setup** menu, select the **Receive All** option.

   Alternatively, you can use the **Receive Page** option on each individual page.

Note
All pages must be received before the setup can be saved.

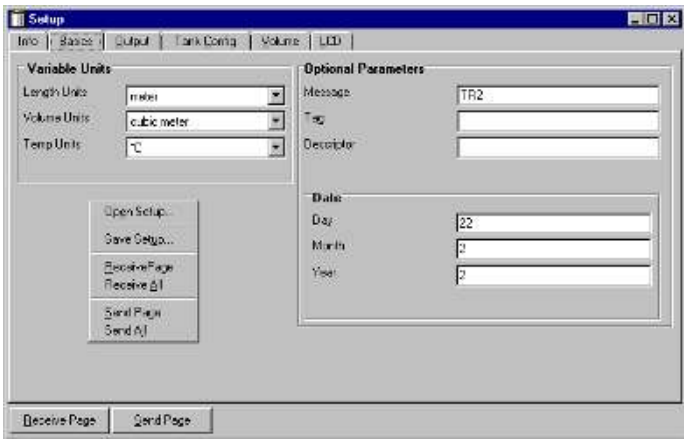

3. Right-click and select the **Save Setup** option.
4. Select a destination folder and enter a file name.

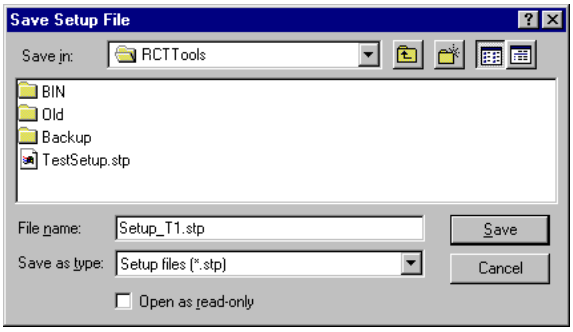

5. Select **Save**.

Memory map

The ***Memory Map*** window allows you to view the current transmitter database registers. It is also possible to save the current database for backup or service purposes, and it is also possible to download a backup database to the transmitter.

Save configuration data in the memory map window

Procedure

1. Start the RCT program.
2. Select **View** → **Memory**, or select the **Memory Map** icon in the RCT workspace (**Advanced** section at the left side of the workspace window).
3. Select the **All EE** option from the drop-down list.
4. Select **Receive**.

   It may take a few minutes to read the database.

5. Right-click and select **Save Memory As**.

6. Type the desired file name and select **OK**.
   Now the current database is stored.

Need help?
See the online help in RCT for further information on how to open a saved database and how to download a database to the transmitter.

7.4.7 Load a setup

Procedure

1. Select **Setup** in the RCT workspace, or select **File** → **Setup**.
2. In the ***Setup*** window, right-click and select the **Open Setup** option, or from the **File** menu, select the **Open Setup** option.
3. Open the source folder and select the desired setup file.
4. Select **Open**.

7.4.8 Upgrade the HART® to Modbus® Converter firmware

The HMC's firmware is upgraded using Rosemount Radar Master.

Prerequisites

Note
All settings in the HART to Modbus converter (HMC) will be lost after upgrading the transmitter. Reconfiguration of Modbus communication setup and alarm handling is required after completing the upgrade.

Note
During firmware upgrade, the HMC Modbus RTU address must be 246, the default address. Ensure to disconnect other Modbus RTU devices that are connected and have address 246.

Note
Do not interrupt communication between the PC and the Rosemount 3300 Level Transmitter during the firmware upload.

Procedure

1. Start Rosemount Radar Master.
2. Enable Modbus communication and set communication preferences.
   a) Select **View** → **Communication Preferences**.
   b) Select the **Modbus** tab.
   c) Select the **Enable Modbus Communication** checkbox.
   d) In the ***Port*** list, select the COM port number that the RS-485 Converter is connected to.

e) Select **Advanced** and use the following settings:
- Modem: RS-485
- Baudrate: According to configuration in HMC (default 9600)
- Stop Bits: According to configuration in HMC (default 1)
- Parity: According to configuration in HMC (default None)
- Handshake: RTS/CTS
- Response Timeout: 1000 ms
- Retries: 3

f) Select **OK**.

3. Search for and connect to device.
   a) Select **Device** → **Search** to open the ***Search Device*** window.
      If the HMC is configured for Modbus ASCII or Levelmaster communication, cycle the power to the transmitter and then open the ***Search Device*** window. The HMC will then communicate using Modbus RTU for 20 seconds and under that time it is possible to connect with Rosemount Radar Master.
   b) In the ***Protocols(s)*** list, verify that Modbus is selected.
   c) Select **Scan Address Range**, and type a start and end address.
      The default HMC Modbus address is 246.
   d) Select **Start Scan**.
   e) Select **OK** to connect when the device is found.
4. Ensure the HMC Modbus address is set to 246 (the default address).
   a) Select **Setup** → **General**.
   b) In the ***Device Address*** box, type `246` and select **Store**.
5. Enter service mode.
   a) Select **Service** → **Enter Service Mode**.
   b) Type the password and select **Submit**.
      The default password is "admin".
6. Upload HMC firmware to device.
   a) Select **Service** → **Upload Firmware**.
   b) Select **Browse** and navigate to the folder containing the HMC firmware file.
   c) Select the ".cry" file, and select **Open**.
   d) In the ***Upload Firmware*** window, select **Upload** to start the firmware upgrade.
7. When upload is finished, select **Tools** → **Diagnostics**.
8. Select **Device Errors** and check for “Checksum”.
9. If “Checksum” is on the list, then do the following:
   a) Select **Tools** → **Factory Settings**.

b) Select **All** and then select **OK**.

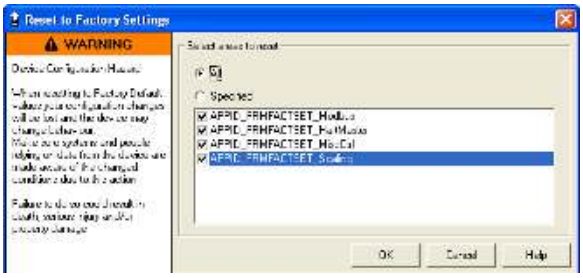

c) Select **Yes**.

Note
An error message might be displayed when performing the Reset to Factory Settings operation. The operation has been successful if the checksum error has been cleared.

10. Select **Tools** → **Restart Device**.
11. Select **Tools** → **Diagnostics**, and then select **Device Errors** to verify that the "Checksum" error is no longer present.
12. If the "Checksum" error is still present, then do the following:
    a) Select **Service** → **View Holding Registers**.
    b) Select **Numbers**.
    c) In the ***Start Register*** box, type `65510`, and then select **Read**.
    d) Type the value `16760` for register 65510 and select **Store**.

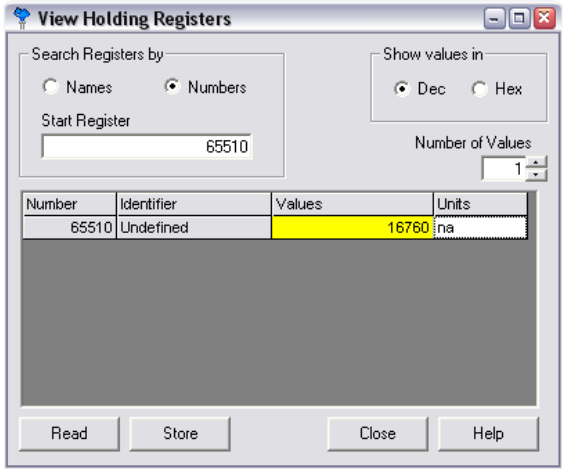

13. Select **Tools** → **Restart Device**.
14. If the HMC is configured for Modbus ASCII or Levelmaster communication, then proceed with the following:
    a) Close Rosemount Radar Master and disconnect the RS-485 converter from the HMC.
    b) Cycle the power to the HMC to exit the Modbus RTU communication mode.

7.5 Application challenges

7.5.1 Handling disturbances at top of tank

Trim Near Zone function

The Trim Near Zone function is used to fine tune performance in the area close to the tank top (Near Zone). The Near Zone stretches about 3.3 ft (1 m) into the tank from the lower side of the device flange. Normally it is not necessary to use the function, but if you experience problems related to the nozzle, pipe, or chamber installation, you may need to use this function.

Figure 7-12 describes the Trim Near Zone function and its effect on the echo curve. This effect is only visible if measurement conditions so require.

Figure 7-12: Echo Curve Before and After Trim Near Zone

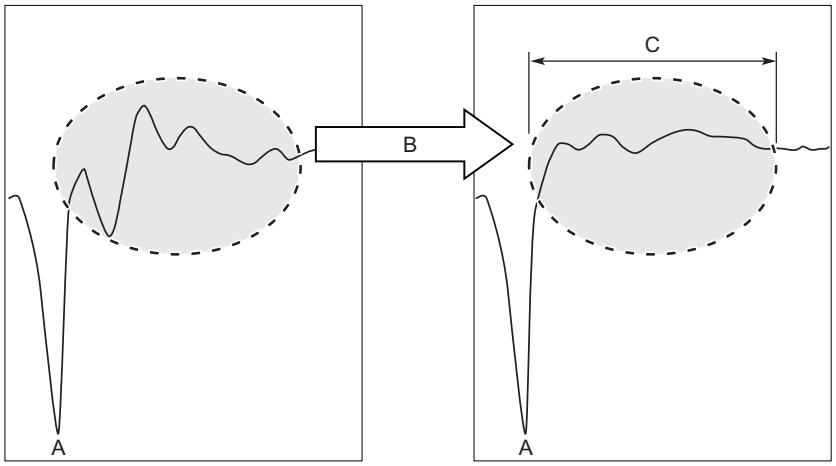

A. Reference Peak
B. Trim Near Zone
C. 0-3.3 ft (0-1 m)

Perform trim near zone

The Trim Near Zone function is used to fine tune performance in the area close to the tank top (Near Zone).

Prerequisites

Before performing the Trim Near Zone, ensure that:

- There is product in the tank.
- The product level is below the Near Zone region (0-3.3 ft (0-1 m) below the Upper Reference Point).

Note
The Trim Near Zone function should only be used for reducing impact from stationary disturbances. It is not suitable for occasional disturbances.

Procedure

1. Start RCT.

2. Select the **Device Commands** option from the **View** menu.
3. Open the **Details** folder.
4. Select the **Trim Near Zone** option.
5. Select the **Update** option and click **OK**.

Reset trim near zone

To reset the Trim Near Zone function to factory settings:

Procedure

1. Start RCT.
2. Select the **Device Commands** option from the **View** menu.
3. Open the **Details** folder.
4. Select the **Trim Near Zone** option.
5. Select the **Reset to Factory Settings** option and click **OK**.

Change the upper null zone

Procedure

1. Start the Radar Configuration Tool (RCT).
2. Identify desired Upper Null Zone using the Waveform Plot.
   a) Start the Waveform Plot reading.
   b) View the Waveform Plot to find out if there are disturbing echoes close to the tank top.
3. Set the desired Upper Null Zone value.
   a) Select the **Setup** icon in the RCT workspace project bar.
   b) Select the **Probe** tab in the ***Setup*** window.
   c) Select the **Receive Page** button.
   d) Type the desired value in the **Upper Null Zone** field.
   e) Select the **Send Page** button.
   Now the UNZ is stored in the transmitter memory.

Related information

Upper null zone

7.5.2 Interface level with submerged probe

The measurement mode Interface when Immersed Probe is used to handle interface measurements when the product level is not visible, for example in a full chamber pipe as illustrated in Figure 7-13. In this case the probe is fully submerged into the upper product, and only the interface level is detected by the transmitter.

Figure 7-13: Interface Level Measurements in a Full Chamber

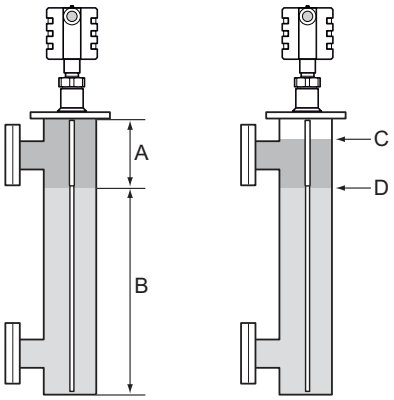

A. Interface distance
B. Interface level
C. Product level is ignored
D. Interface level is measured

Even if the upper product level drops, it is ignored by the transmitter which continues to measure only the interface level. If the product level drops, the air filled region in the upper part of the pipe will slightly reduce the measurement accuracy of the interface level. To achieve high accuracy in this measurement mode the probe must be fully submerged.

Set the measurement mode

To set the measurement mode to Interface when Immersed Probe:

Prerequisites

Note
Do not use Measurement Mode Interface when Immersed Probe in “standard” applications when both interface level and product level are measured.

Procedure

1. In RCT, open the **Setup** window.
2. Select the **Environment** tab.
3. Select **Interface when Immersed Probe** measurement mode.
4. Select the **Send Page** button.

Need help?
Adjust Threshold T2 if the level pulse is not detected.

7.6 Replace the transmitter head

Figure 7-14: Transmitter Head Replacement

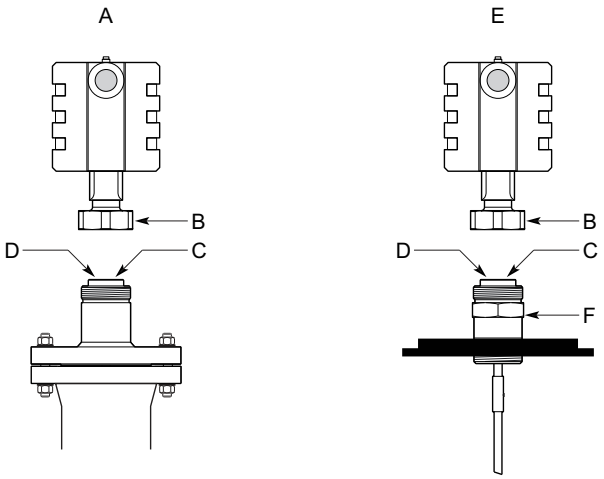

A. Flanged version
B. Nut
C. Process seal
D. Put the protection plug here
E. Threaded version
F. Adapter

Prerequisites

Note
If the transmitter head must be removed from the probe, ensure that the process seal is carefully protected from dust and water.

Procedure

1. Loosen the nut that connects the transmitter head to the process seal.
2. ⚠ Carefully lift the transmitter head.
3. On the probe, ensure that the upper surface of the process seal is clean and free from dust and water. Wipe it clean with a dry and lint-free cloth.
4. Verify the spring-loaded pin at the center of the process seal is properly inserted. When inserted properly, only the plunger is seen above the edge inside the seal hole.

   Note
   Do not remove the process seal from the adapter.

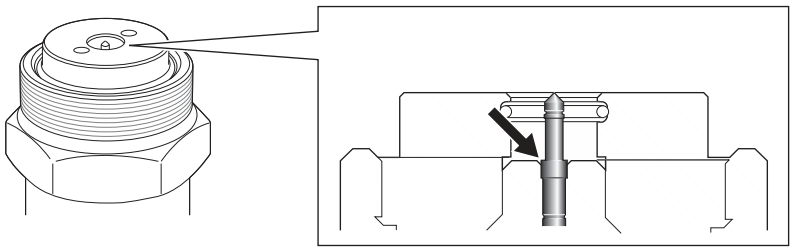

5. If the transmitter head is not mounted directly, attach the protection plug to the process seal to protect the exposed parts from dust and water. If a protection plug is not available, then cover the process seal with a plastic bag.
6. Rotate the new transmitter head so the device display faces the desired direction.
7. Tighten the nut. Max torque is 30 ft-lb (40 Nm).

Postrequisites

Configure the transmitter.

7.7 Replace the probe

Figure 7-15: Probe Replacement

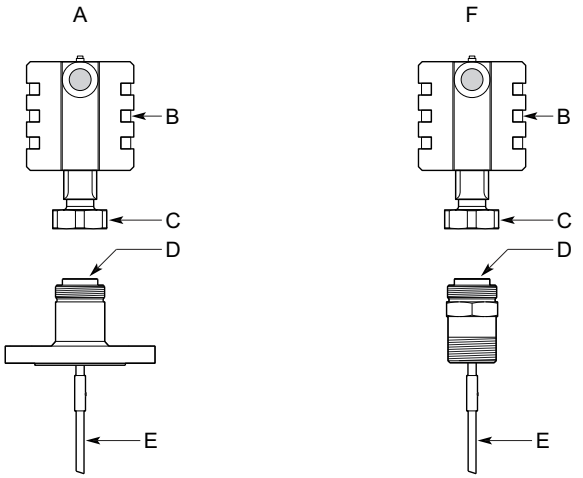

A. Flange version
B. Transmitter head
C. Nut
D. Process seal
E. Probe
F. Threaded version

Prerequisites

Flexible and rigid probes require different radar electronics and cannot be used with the same transmitter head.

Procedure

1. Loosen the nut.
2. ⚠ Remove the transmitter head from the old probe. Be sure to protect the transmitter head bottom from dust and water.
3. On the new probe, ensure that the protection plug is removed and the upper surface of the process seal is clean. Also verify that the spring-loaded pin at the center of the process seal is properly inserted.
4. Mount the transmitter head on the new probe.
5. Tighten the nut. Max torque is 30 ft-lb (40 Nm).
6. If the new probe is not of the same type as the old one, update the transmitter configuration by setting the Probe Type parameter to the appropriate value.

a) In RCT, select **Setup** → **Tank Config**.

b) In the **Probe Type** list, select desired probe type.

7. Measure the Probe Length and enter the measured value.
   a) In RCT, select **Setup** → **Tank Config**.
   b) In the **Probe Length** box, enter the measured Probe Length value.
8. Verify that the transmitter is calibrated.

7.8 Service support

To expedite the return process, refer to Emerson.com and contact the nearest Emerson representative.

⚠ CAUTION

Individuals who handle products exposed to a hazardous substance can avoid injury if they are informed of and understand the hazard. Returned products must include a copy of the required Safety Data Sheet (SDS) for each substance.

Emerson representatives will explain the additional information and procedures necessary to return goods exposed to hazardous substances.

A Specifications and reference data

A.1 Performance specifications

A.1.1 General

Reference conditions

Twin Lead probe, 77 °F (25 °C) water

Reference accuracy

± 0.2 in. (5 mm) for probes ≤16.4 ft. (5 m)

± 0.1% of measured distance for rigid probes >16.4 ft. (5 m)

± 0.15% of measured distance for flexible probes >16.4 ft. (5 m)

For probes with spacers, the accuracy may deviate close to the spacers. Accuracy may be affected by remote housing.

Repeatability

± 0.04 in. (1 mm)(1)

Ambient temperature effect

Less than 0.01% of measured distance per °C

Update interval

Minimum 1 update per second

A.1.2 Environment

Vibration resistance

- Polyurethane-covered aluminum housing: IEC 60770-1
- SST housing: IACS E10

Electromagnetic compatibility

Emission and Immunity: meets EN 61326-1:2013, class A equipment intended for use in industrial locations if installed in metallic vessels or still-pipes.

When rigid/flexible single probes are installed in non-metallic or open vessels, influence of strong electromagnetic fields might affect measurements.

Related information

Installation in non-metallic tanks and open-air applications

(1) In accordance with IEC 60770-1. See the IEC 60770-1 standard for a definition of radar specific performance parameters and if applicable corresponding test procedures.

CE-mark

The 4–20 mA HART version (Output Option Code H) complies with applicable directives (EMC and ATEX).

Built-in lightning protection

Meets EN 61000-4-4 Severity Level 4 and EN 61000-4-5 Severity Level 4

Contamination/product build-up

- Single lead probes are preferred when there is a risk of contamination (because build-up can result in the product bridging between the inner lead and outer pipe for the coaxial probe).
- For viscous or sticky applications, PTFE probes are recommended. Periodic cleaning may also be required.
- For viscous or sticky applications, it is not recommended to use centering discs mounted along the single lead probe.
- Maximum error due to coating is 1 to 10% depending on probe type, dielectric constant, coating thickness, and coating height above product surface.

Table A-1: Maximum Recommended Viscosity and Contamination/Build-up

Probe type	Maximum viscosity	Contamination/build-up
Single lead	8000 cP(1)	Build-up allowed
Coaxial	500 cP	Not recommended

(1) Consult your local Emerson representative in the case of agitation/turbulence and high viscous products.

A.1.3 Measuring range

Measuring range and minimum dielectric constant

See Table A-2 and Table A-3 for each probe's measuring range and minimum dielectric constant. Due to the measuring range depending on the application and factors described below, the values are a guideline for clean liquids. For more information, ask your local Emerson representative.

Note
See Table A-4 for the measuring range when using the Remote Housing.

Different parameters (factors) affect the echo and therefore the maximum measuring range differs depending on application according to:

- Disturbing objects close to the probe.
- Media with higher dielectric constant (ε_r) gives better reflection and allows a longer measuring range.
- Surface foam and particles in the tank atmosphere may affect measuring performance.
- Heavy product build-up or contamination on the probe should be avoided since it can reduce measuring range and might cause erroneous level readings.

Table A-2: Maximum Measuring Range

Probe type	Maximum measuring range
Rigid single lead/segmented rigid single lead	9 ft. 10 in. (3 m) for 8 mm probes (code 4A) 19 ft. 8 in. (6 m) for 13 mm probes (code 4B) 19 ft. 8 in. (6 m) for 13 mm probes (code 4S)
Flexible single lead	77 ft. 1 in. (23.5 m)
Coaxial	19 ft. 8 in. (6 m)

Table A-3: Minimum Dielectric Constant

Probe type	Minimum dielectric constant
Rigid single lead/segmented rigid single lead	2.5(1) (1.7 if installed in a metallic bypass or stilling well)
Flexible single lead	2.5 up to 36 ft. (11 m)(2) 5.0 up to 66 ft. (20 m) 7.5 up to 77 ft. 1 in. (23.5 m)
Coaxial	1.5

(1) May be lower depending on installation.
(2) In pipes with a diameter less than 8 in. (20 cm), the minimum dielectric constant is 2.0.

Table A-4: Measuring Range and Minimum Dielectric Constant when using Remote Housing

	Rigid single lead/ segmented rigid single lead	Flexible single lead	Coaxial
Maximum measuring range	9 ft. 10 in. (3 m) for 8 mm probes 14 ft. 9 in. (4.5 m) for 13 mm probes	77 ft. 1 in. (23.5 m)	19 ft. 8 in. (6 m)
Minimum dielectric constant with 1 m remote housing	2.7(1) (2.0 if installed in a metallic bypass or stilling well)	2.7 up to 36 ft. (11 m) 6 up to 66 ft. (20 m) 10 up to 72 ft. (22 m)	1.5
Minimum dielectric constant with 2 m remote housing	3.3(1) (2.2 if installed in a metallic bypass or stilling well)	3.2 up to 36 ft. (11 m) 8 up to 67 ft. (20.5 m)	1.6
Minimum dielectric constant with 3 m remote housing	3.8(1) (2.5 if installed in a metallic bypass or stilling well)	3.7 up to 36 ft. (11 m) 11 up to 62 ft. (19 m)	1.7

(1) May be lower depending on installation.

Interface measuring range

The maximum allowable upper product thickness/measuring range is primarily determined by the dielectric constants of the two liquids.

Typical applications include interfaces between oil/oil-like and water/water-like liquids, with a low (<3) dielectric constant for the upper product and a high (>20) dielectric constant for the lower product. For such applications, the maximum measuring range is limited by the length of the coaxial and rigid single lead probes.

Transition zones

These zones are areas where measurements are non-linear or have reduced accuracy. If measurements are desired at the very top of a tank, it is possible to mechanically extend the nozzle and use a coaxial probe. The upper transition zone is then moved into the extension. See Table A-5.

For a flexible single lead probe with chuck, the lower transition zone is measured upwards from the upper part of the clamp.

Figure A-1: Transition Zones

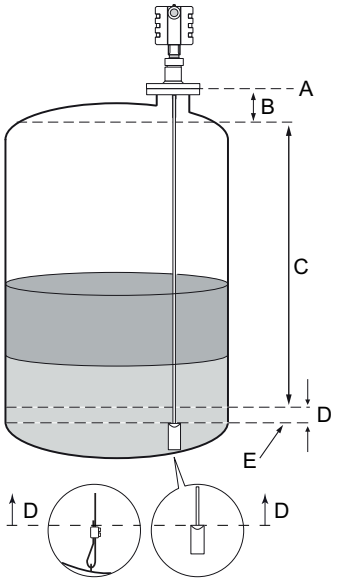

A. Upper Reference Point
B. Upper Transition Zone
C. Maximum Recommended Measuring Range
D. Lower Transition Zone
E. Lower Reference Point

Table A-5: Transition Zones

	Dielectric Constant	Rigid single lead/ segmented rigid single lead	Flexible single lead	Coaxial
Upper Transition Zone(1)	80	4 in. (10 cm)	5.9 in. (15 cm)	4 in. (10 cm)
	2	4 in. (10 cm)	20 in. (50 cm)	4 in. (10 cm)
Lower Transition Zone(2)	80	2 in. (5 cm)	2 in. (5 cm)(3)(4)	1.2 in. (3 cm)
	2	4 in. (10 cm)	6.3 in. (16 cm) - long weight, short weight, and chuck(4)(5)	2 in. (5 cm)

(1) The distance from the upper reference point where measurements have reduced accuracy.

(2) The distance from the lower reference point where measurements have reduced accuracy.
(3) The measuring range for the PTFE covered Flexible Single Lead probe includes the weight when measuring on a high dielectric media.
(4) Note that the weight length or chuck fastening length adds to non-measurable area and is not included in the diagram.
(5) When using a metallic centering disc, the lower transition zone is 8 in. (20 cm), including weight if applicable. When using a PTFE centering disc, the lower transition zone is not affected.

Note
The 4–20 mA set points are recommended to be configured between the transition zones, within the measuring range.

A.2 Functional specifications

A.2.1 General

Field of application

Liquids and semi-liquids level or liquid/liquid interfaces

- Model 3301, for level or submerged probe interface measurement
- Model 3302, for level and interface measurements

Measurement principle

Time Domain Reflectometry (TDR)

Microwave output power

Nominal 50 µW, Max. 2 mW

EMC

FCC part 15 subpart B and EMC Directive (2014/30/EU). Considered to be an unintentional radiator under the Part 15 rules.

Humidity

0 to 100% relative humidity

Start-up time

< 10 s

A.2.2 4-20 mA HART®

Output

Two-wire, 4-20 mA. Digital process variable is superimposed on 4-20 mA signal, and available to any host that conforms to the HART® protocol. The digital HART signal can be used in multidrop mode.

Power requirements

Terminals in the transmitter housing provide connections for signal cables. The Rosemount 3300 Level Transmitter is loop-powered and operates with the following power supplies:

Table A-6: External Power Supply for HART

Approval type	Input voltage (U_i)(1)
None	11 - 42 Vdc
Intrinsically Safe	11 - 30 Vdc
Explosion-proof/Flameproof	16 - 42 Vdc

(1) Reverse polarity protection.

Figure A-2: External Power Supply for HART

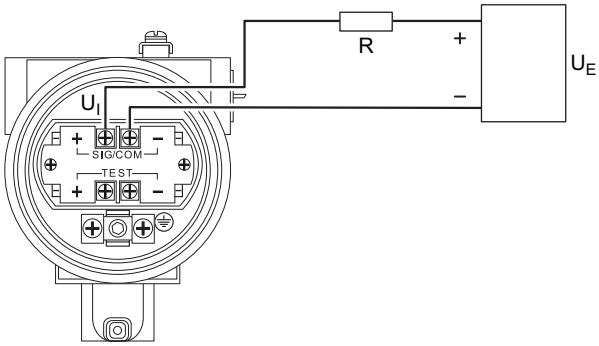

R = Load Resistance (Ω)

U_E = External Power Supply Voltage (Vdc)

U_i = Input Voltage (Vdc)

For Flameproof/Explosion-proof installations the Rosemount 3300 Series transmitters have a built-in barrier; no external barrier needed.

When the Emerson Wireless 775 THUM™ Adapter is fitted, it adds a maximum drop of 2.5 Vdc in the connected loop.

Signal on alarm

	High	Low
Standard	21.75 mA	3.75 mA
Namur NE43	22.50 mA	3.60 mA

Saturation levels

	High	Low
Standard	20.8 mA	3.9 mA
Namur NE43	20.5 mA	3.8 mA

Load limitations

For HART® communication, a minimum loop resistance of 250 Ω is required. Maximum loop resistance is determined by the voltage level of the external power supply, as given by the following diagrams:

Figure A-3: Non-Hazardous Installations

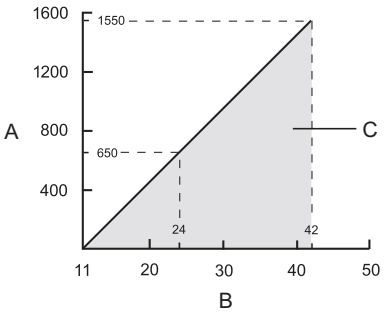

A. Loop Resistance (Ohms)
B. External Power Supply Voltage (Vdc)
C. Operating region

Figure A-4: Intrinsically Safe Installations

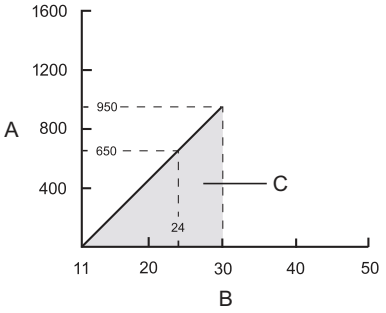

A. Loop Resistance (Ohms)
B. External Power Supply Voltage (Vdc)
C. Operating region

Figure A-5: Explosion-proof/Flameproof Installations

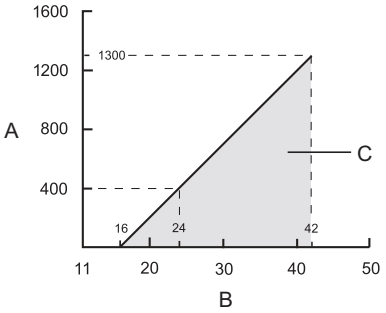

A. Loop Resistance (Ohms)
B. External Power Supply Voltage (Vdc)
C. Operating region

Note
For the Explosion-proof/Flameproof installations the diagram is only valid if the HART load resistance is at the + side, otherwise the load resistance value is limited to 300 Ω.

A.2.3 Modbus®

Output

The RS-485 Modbus version communicates by Modbus RTU, Modbus ASCII, and Levelmaster protocols.

8 data bits, 1 start bit, 1 stop bit, and software selectable parity.

Baud Rate	1200, 2400, 4800, 9600 (default), and 19200 bits/s
Address Range	1 to 255 (default device address is 246)

HART communication is used for configuration via the HART terminals or tunneling via the RS-485.

External power supply

The input voltage U_i for Modbus is 8-30 Vdc (max. rating).

Figure A-6: External Power Supply for Modbus

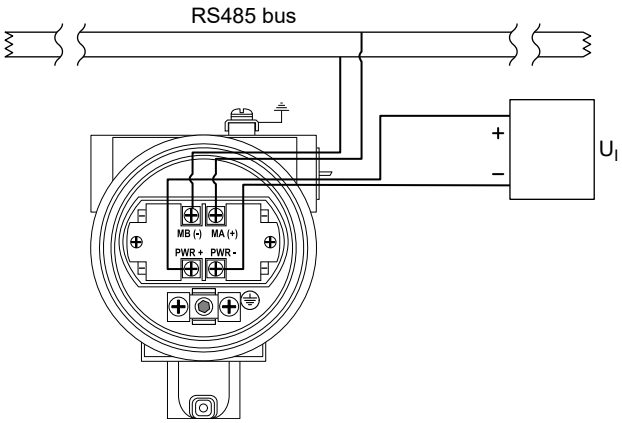

U_i = Input Voltage (Vdc)

For Flameproof/Explosion-proof installations the Rosemount 3300 Series transmitters have a built-in barrier; no external barrier needed.

Power consumption

- < 0.5 W (with HART address=1)
- < 1.2 W (incl. four HART slaves)

A.2.4 Display and configuration

Integral display

The integral digital display can toggle between: level, distance, volume, internal temperature, interface distance, interface level, peak amplitudes, interface thickness, percentage of range, analog current out.

Note
The display cannot be used for configuration purposes.

Remote display

Data can be read remotely by using the Rosemount 751 Field Signal Indicator, see the corresponding Product Data Sheet for more information.

Configuration tools

- Rosemount Radar Configuration Tool (included in the delivery)
- Device Descriptor (DD) compliant systems
- Device Type Manager (DTM™) compliant systems

Output units

- Level, Interface and Distance: ft., in., m, cm, or mm
- Volume: $ft.^3$, $in.^3$, US gals, Imp gals, barrels, yd^3, m^3, or liters

Output variables

Table A-7: Output Variables

Variable	3301	3302
Level	✓	✓
Distance (to product surface)	✓	✓
Volume	✓	✓
Internal Temperature	✓	✓
Interface Level	(✓)(1)	✓
Interface Distance	(✓)(1)	✓
Upper Product Thickness	N/A	✓
Peak Amplitudes	✓	✓

(1) Interface measurement only for fully submerged probe.

Damping

0-60 s (10 s, default value)

A.2.5 Process temperature and pressure rating

Figure A-7 gives the maximum process temperature (measured at the lower part of the flange or threaded connection) and pressure rating.

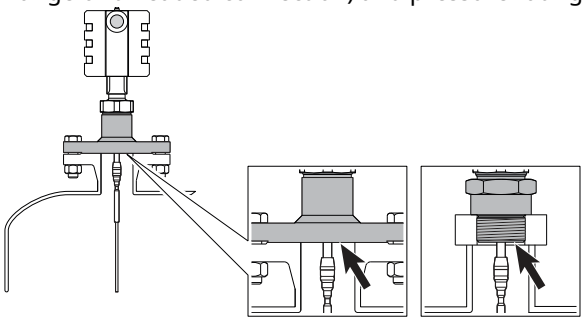

Final rating depends on flange, material of construction, and O-ring selection.

Figure A-7: Maximum Rating, Standard Tank Connections

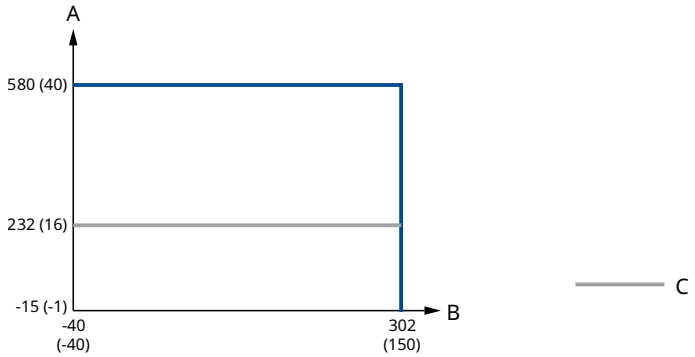

A. Pressure psig (bar)
B. Temperature °F (°C)
C. Protective plate: PTFE (Material of construction code 7)

Table A-8: Temperature and Pressure Ranges for Standard Tank Seals with Different O-ring Material

O-ring material	Temperature °F (°C) in air		Pressure psig (bar)
	Minimum	Maximum	Maximum
Fluoroelastomer (FKM)	-22 (-30)	302 (150)	580 (40)
Ethylene Propylene (EPDM)	-40 (-40)	266 (130)	580 (40)
Kalrez® Perfluoroelastomer (FFKM)	14 (-10)	302 (150)	580 (40)
Nitrile Butadiene (NBR)	-31 (-35)	230 (110)	580 (40)

Note
Always check the chemical compatibility of the O-ring material with your application. If the O-ring material is not compatible with its chemical environment, the O-ring may eventually malfunction.

A.2.6 Temperature limits

Ambient temperature

The maximum and minimum ambient temperature for the electronics depends the approval.

Note
In applications where the ambient temperature exceeds the limits of the electronics, a Remote Mounting connection can be used. The maximum temperature for the Remote Mounting connection at the vessel connection point is 302 °F (150 °C).

Table A-9: Ambient Temperature Limits

Description	Operating limit	Storage limit
Without integral display	-40 °F to 185 °F (-40 °C to 85 °C)	-40 °F to 176 °F (-40 °C to 80 °C)
With integral display	-40 °F to 158 °F (-40 °C to 70 °C)(1)	-40 °F to 176 °F (-40 °C to 80 °C)

(1) Integral display may not be readable and device display updates will be slower at temperatures below -4 °F (-20 °C).

Related information

Product certifications

A.2.7 Flange rating

ASME flange rating

316 according to ASME B16.5 Table 2-2.2:

- Maximum 302 °F/580 psig (150 °C/40 bar)

Alloy C-276 (UNS N10276) according to ASME B16.5 Table 2-3.8:

- Maximum 302 °F/580 psig (150 °C/40 Bar)

EN flange rating

EN 1.4404 according to EN 1092-1 material group 13E0:

- Maximum 302 °F/580 psig (150 °C/40 Bar)

Alloy C-276 (UNS N10276) according to EN 1092-1 material group 12E0:

- Maximum 302 °F/580 psig (150 °C/40 Bar)

JIS flange rating

316 according to JIS B2220 material group 2.2:

- Maximum 302 °F/580 psig (150 °C/40 Bar)

Fisher and Masoneilan flange rating

316 according to ASME B16.5 Table 2-2.2:

- Maximum 302 °F/580 psig (150 °C/40 Bar)

A.2.8 Tri Clamp rating

Table A-10: Tri Clamp Rating

Size	Maximum pressure(1)
1½-in. (37.5 mm)	232 psig (16 bar)
2-in. (50 mm)	232 psig (16 bar)
3-in. (75 mm)	145 psig (10 bar)
4-in. (100 mm)	145 psig (10 bar)

(1) The final rating depends on the clamp and gasket.

A.2.9 Plate design

Certain models of flanged alloy and PTFE covered probes have a tank connection design with a protective flange plate that prevents the backing flange from being exposed to the tank atmosphere. The protective flange plate is manufactured in the same material as the probe. The backing flange is made of 316L/EN 1.4404 for alloy probes, and 316/1.4404 for PTFE covered probes.

Figure A-8: Protective Plate

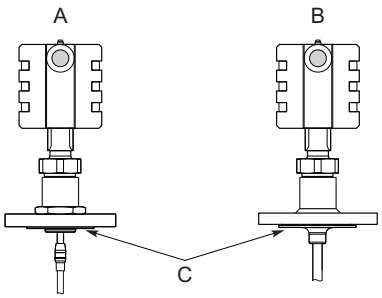

A. Alloy probe and protective plate
B. PTFE covered probe and protective plate
C. Protective plate

PTFE protective plate

Flange rating according to SST backing flange ASME B16.5 Table 2-2.2, EN 1092-1 material group 13E0, and JIS B2220 material group 2.3.

- Maximum 302 °F/232 psig (150 °C/16 Bar)

Alloy C-276 protective plate

Flange rating according to SST backing flange ASME B16.5 Table 2-2.3, EN 1092-1 material group 13E0, and JIS B2220 material group 2.3.

- Maximum 302 °F/580 psig (150 °C/40 Bar)

Alloy 400 protective plate

Flange rating according to SST backing flange ASME B16.5 Table 2-2.3, EN 1092-1 material group 13E0, and JIS B2220 material group 2.3.

- Maximum 302 °F/580 psig (150 °C/40 Bar)

A.2.10 Conditions used for flange strength calculations

Table A-11: 316/316L Flanges

Standard	Bolting material	Gasket	Flange material	Hub material
ASME	Stainless steel SA193 B8M Cl.2	Soft (1a) with min. thickness 1.6 mm	Stainless steel A182 Gr. F316	Stainless steel SA479M 316
EN, JIS	EN 1515-1/-2 group 13E0, A4-70	Soft (EN 1514-1) with min. thickness 1.6 mm	Stainless steel A182 Gr. F316 and EN 10222-5-1.4404	Stainless steel SA479M 316, and EN 10272-1.4404

Table A-12: Process Connection with Plate Design

Standard	Bolting material	Gasket	Flange material	Hub material
ASME	Stainless steel SA193 B8M Cl.2	Soft (1a) with min. thickness 1.6 mm	Stainless steel A182 Gr. F316L/F316	SB574 Gr. N10276 or SB164 Gr. N04400
EN, JIS	EN 1515-1/-2 group 13E0, A4-70	Soft (EN 1514-1) with min. thickness 1.6 mm	Stainless steel A182 Gr. F316L/F316 and EN 10222-5-1.4404	

Table A-13: Alloy C-276 Flanges

Standard	Bolting material	Gasket	Flange material	Hub material
ASME	UNS N10276	Soft (1a) with min. thickness 1.6 mm	SB462 Gr. N10276 (solution annealed condition) or SB575 Gr. N10276 (solution annealed condition)	SB574 Gr. N10276
EN, JIS		Soft (EN 1514-1) with min. thickness 1.6 mm		

A.2.11 Interface measurements

The Rosemount 3302 is a good choice for measuring the interface of oil and water, or other liquids with significant dielectric differences. It is also possible to measure interfaces with a Rosemount 3301 in applications where the probe is fully submerged in the liquid.

Figure A-9: Interface Level Measurement

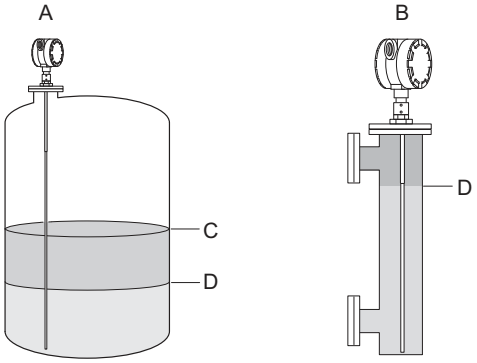

A. Rosemount 3302
B. Rosemount 3301 (fully submerged)
C. Product level
D. Interface level

Interface measurement considerations

If interface is to be measured, follow these criteria:

- The dielectric constant of the upper product should be known and should not vary. The Radar Configuration Tools software has a built-in dielectric constant calculator to assist the user in determining the dielectric constant of the upper product.
- The dielectric constant of the upper product must have a lower dielectric constant than the lower product to have a distinct reflection.
- The difference between the dielectric constants for the two products must be larger than 10.
- Maximum dielectric constant for the upper product is 10 for the coaxial probe.
- The upper product thickness must be larger than 4 in. (0.1 m) for the coaxial probe in order to distinguish the echoes of the two liquids.

Emulsion layers

Sometimes there is an emulsion layer (mix of the products) between the two products which can affect interface measurements. For guidelines on emulsion situations, consult your local Emerson representative.

A.3 Physical specifications

A.3.1 Material selection

Emerson provides a variety of Rosemount products with various product options and configurations, including materials of construction that can be expected to perform well in a wide range of applications.

The product information presented is intended as a guide for the purchaser to make an appropriate selection for the application. It is the purchaser's sole responsibility to make a careful analysis of all process parameters (such as all chemical components, temperature, pressure, flow rate, abrasives, contaminants, etc.), when specifying product, materials, options, and components for the particular application. Emerson is not in a position to evaluate or guarantee the compatibility of the process fluid or other process parameters with the product, options, configuration, or materials of construction selected.

A.3.2 Engineered solutions

When standard model codes are not sufficient to fulfill requirements, please consult the factory to explore possible Engineered Solutions. This is typically, but not exclusively, related to the choice of wetted materials or the design of a process connection. These Engineered Solutions are part of the expanded offerings and may be subject to additional delivery lead time. For ordering, factory will supply a special R-labeled numeric option code that should be added at the end of the standard model string.

A.3.3 Housing and enclosure

Type

Dual compartment (removable without opening the tank). Electronics and cabling are separated. Two entries for conduit or cable connections. The transmitter housing can be rotated in any direction.

Electrical connection

½ - 14 NPT for cable glands or conduit entries.

Optional: M20 x 1.5 conduit/cable adapter or PG 13.5 conduit/cable adapter.

Recommended output cabling is twisted shielded pairs, 18-12 AWG.

Housing material

Polyurethane-covered Aluminum or SST Grade CF8M (ASTM A743)

Ingress protection

NEMA® 4X, IP 66, IP 67

Factory sealed

Yes

Weight

- Aluminum transmitter head: 5.5 lb (2.5 kg)
- SST transmitter head: 11 lb (5 kg)

A.3.4 Remote housing mounting

Kit that includes a flexible armored extension cable and a bracket for wall or pipe mounting.

Figure A-10: Remote Housing Mounting

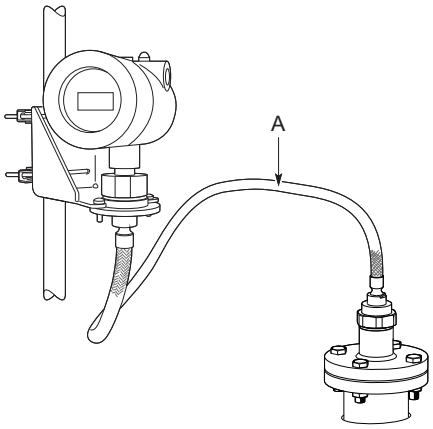

A. Remote Housing Mounting Cable: 3, 6, or 9 ft (1, 2, or 3 m)

A.3.5 Tank connection

The tank connection consists of a tank seal, a flange, Tri Clamp, or NPT or BSPP (G) threads.

A.3.6 Flange dimensions

Follows ASME B16.5, JIS B2220, and EN 1092-1 standards for blind flanges.

A.3.7 Vented flanges

Available with Masoneilan and Fisher vented flanges. Vented flanges must be ordered as accessories with a 1½-in. NPT threaded process connection (code RA). As an alternative to a vented flange, it is possible to use a flushing connection ring on top of the standard nozzle.

A.3.8 Tri Clamp connection

Follows ISO 2852 standard.

A.3.9 Pressure Equipment Directive (PED)

Complies with 2014/68/EU article 4.3

A.3.10 Probes

Probe versions

Coaxial, rigid single lead, and flexible single lead.

For interface measurements, rigid single probe is the best choice for chamber mounting. The coaxial probe is the preferred choice for clean, low dielectric constant liquids.

Total probe length

This is defined from the Upper Reference Point to the end of the probe (weight included, if applicable).

Figure A-11: Total Probe Length

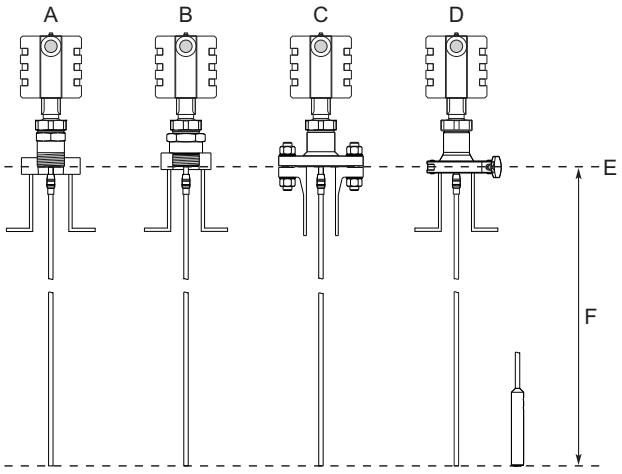

A. NPT
B. BSPP (G)
C. Flange
D. Tri Clamp
E. Upper reference point
F. Total probe length

Select the probe length according to the required measuring range (the probe must be hung and fully extended through the entire distance where level readings are desired).

Cut-to-fit probes

All probes can be cut in field except for the PTFE covered probe.

However, there are some restrictions for the coaxial probe: Probes over 4.1 ft. (1.25 m) can be cut up to 2 ft. (0.6 m). Shorter probes can be cut to the minimum length of 1.3 ft. (0.4 m).

Minimum and maximum probe length

Probe type	Probe length
Flexible single lead	3.3 to 77.1 ft. (1 to 23.5 m)
Rigid single lead (0.3 in./8 mm)	1.3 to 9.8 ft. (0.4 to 3 m)
Rigid single lead (0.5 in./13 mm)	1.3 to 19.7 ft. (0.4 to 6 m)
Segmented rigid single lead	1.3 to 19.7 ft. (0.4 to 6 m)
Coaxial	1.3 to 19.7 ft. (0.4 to 6 m)

Probe angle

0 to 90 degrees from vertical axis

Tensile strength

- 0.16 in. (4 mm) Flexible single lead SST: 2698 lb (12 kN)
- 0.16 in. (4 mm) Flexible single lead Alloy C-276: 1574 lb (7 kN)
- 0.16 in. (4 mm) Flexible single lead Alloy 400: 1124 lb (5 kN)

Collapse load

- 0.16 in. (4 mm) Flexible single lead SST: 3597 lb (16 kN)
- 0.16 in. (4 mm) Flexible single lead Alloy C-276: 1798 lb (8 kN)
- 0.16 in. (4 mm) Flexible single lead Alloy 400: 1349 lb (6 kN)

Sideway capacity

- Rigid single lead/Segmented rigid single lead: 4.4 ft. lbf, 0.44 lb at 9.8 ft. (6 Nm, 0.2 kg at 3 m)
- Coaxial: 73.7 ft. lbf, 3.7 lb at 19.7 ft. (100 Nm, 1.67 kg at 6 m)

A.3.11 Material exposed to tank atmosphere

Table A-14: Standard Probe (Operating Temperature and Pressure Code S)

Material of construction code	Material exposed to tank atmosphere
1	316L/316 (EN 1.4404), PTFE, PFA, silicone grease, and O-ring materials
2	Alloy C-276 (UNS N10276), PTFE, PFA, silicone grease, and O-ring materials
3	Alloy 400 (UNS N04400), Alloy K500 (UNS N05500), PTFE, PFA, silicone grease, and O-ring materials
7	PTFE (1 mm PTFE cover)
8	316L/316 (EN 1.4404), PTFE, silicone grease, and O-ring materials

A.3.12 Weight

Table A-15: Flange and Probes

Item	Weight
Flange	Depends on flange size
Flexible single lead probe	0.05 lb/ft. (0.08 kg/m)
Rigid single lead probe (0.3-in./8 mm)	0.27 lb/ft. (0.4 kg/m)
Rigid single lead probe (0.5-in./13 mm)	0.71 lb/ft. (1.06 kg/m)
Segmented rigid single lead probe	0.71 lb/ft. (1.06 kg/m)
Coaxial probe	0.67 lb/ft. (1 kg/m)

Table A-16: End Weight

Item	Weight
Standard weight for flexible single lead probe (0.16-in./4 mm)	0.88 lb (0.40 kg)
Short weight (W2) for flexible single lead probe (0.16-in./4 mm)	0.88 lb (0.40 kg)
Heavy weight (W3) for flexible single lead probe (0.16-in./4 mm)	2.43 lb (1.10 kg)
Weight for PTFE covered flexible single lead	2.2 lb (1 kg)

A.3.13 End weight options

A short weight is available for the single flexible probe. It is used for measuring close to the probe end and shall be used where the measuring range must be maximized. The height is 2 in. (50 mm) and the diameter is 1.5 in. (37.5 mm). The option code is W2.

If a heavier weight is needed, option code W3 can be used. The height is 5.5 in. (140 mm) and the diameter is 1.5 in. (37.5 mm).

A.4 Dimensional drawings

Figure A-12: Rigid Single Lead Probe with Flange Connection

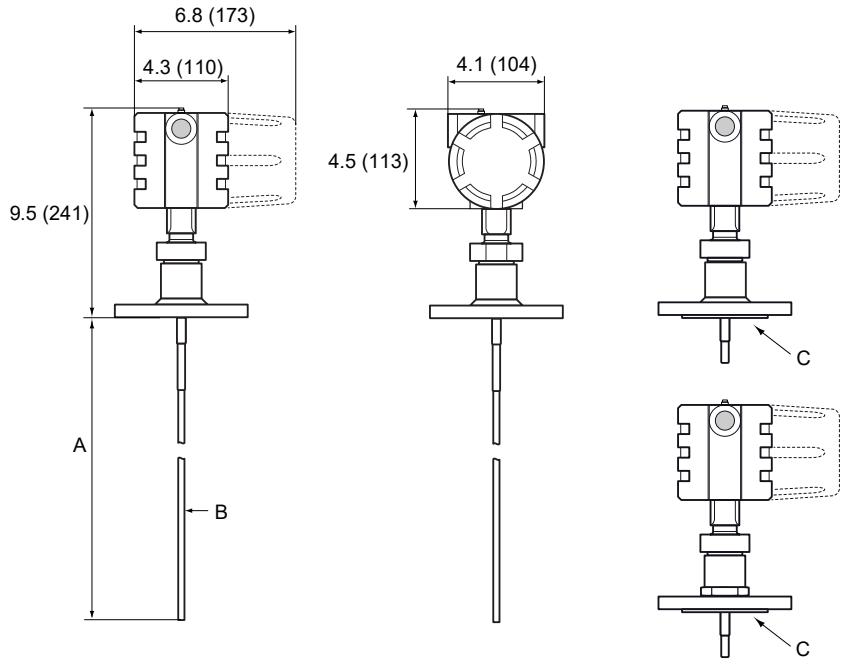

A. L ≤ 10 ft. (3 m); L ≤ 20 ft. (6 m) for Ø 0.51 (13)
B. Ø 0.31 (8) or Ø 0.51 (13) for SST and Alloy probes; Ø 0.47 (12) for PTFE covered probe
C. The PTFE and alloy probes are designed with a protective plate.

Dimensions are in inches (millimeters).

Figure A-13: Rigid Single Lead Probe with Threaded Connection

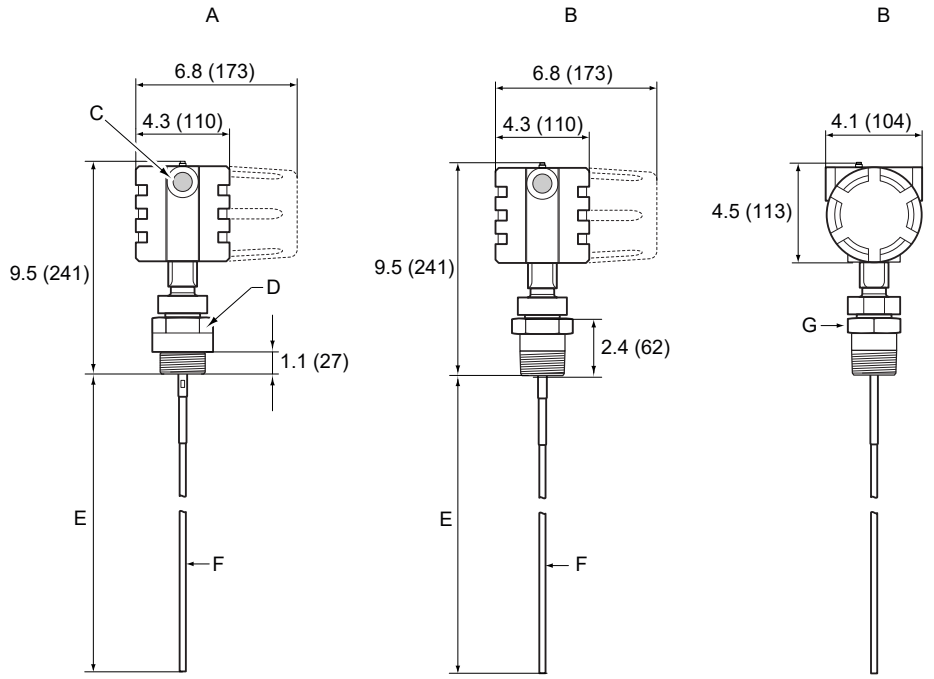

A. G 1/1½ inch
B. NPT 1/1½/2 inch
C. ½ - 14 NPT; optional adapters: M20x1.5
D. s52/s60
E. L ≤ 10 ft. (3 m); L ≤ 20 ft. (6 m) for Ø 0.51 (13)
F. Ø 0.31 (8) or Ø 0.51 (13) for SST and Alloy probes; Ø 0.47 (12) for PTFE covered probe
G. s52

Dimensions are in inches (millimeters).

Figure A-14: Segmented Rigid Single Lead Probe with Flange Connection

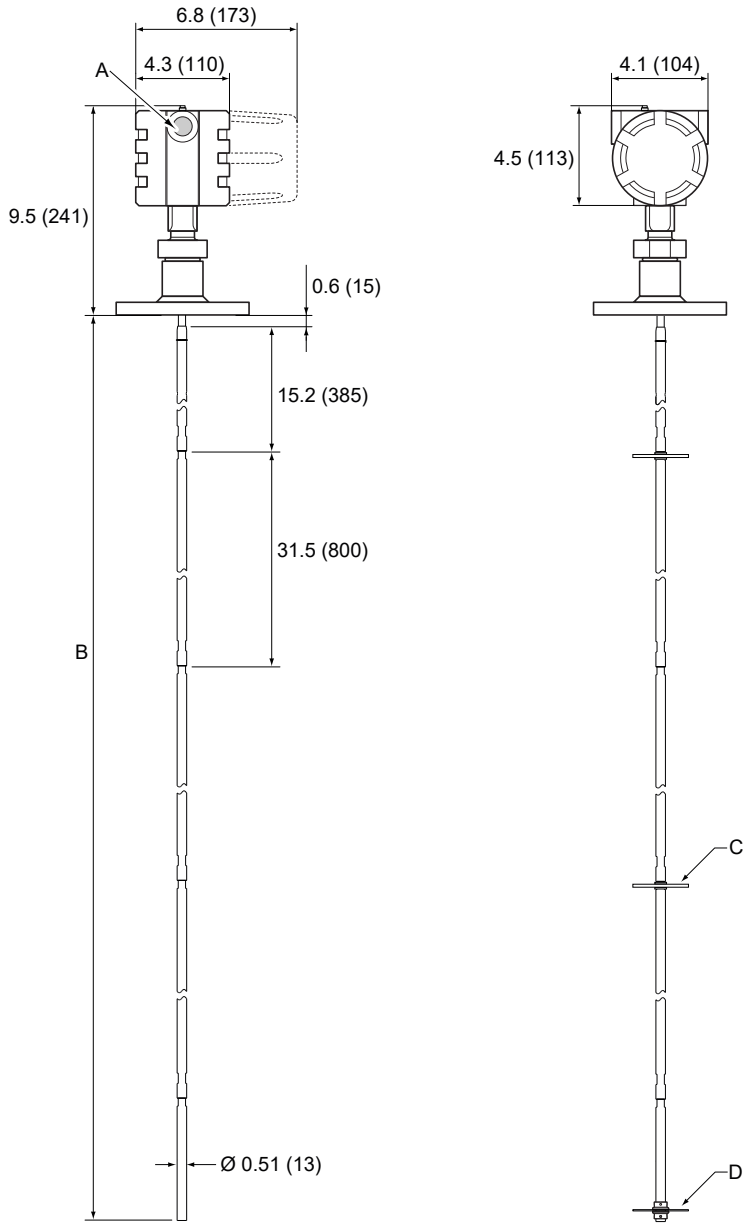

A. ½ - 14 NPT; optional adapters: M20x1.5
B. L ≤ 20 ft. (6 m)
C. Optional: PTFE centering disc
D. Optional: Bottom centering disc (SST or PTFE)

Dimensions are in inches (millimeters).

Figure A-15: Segmented Rigid Single Lead Probe with Threaded Connection

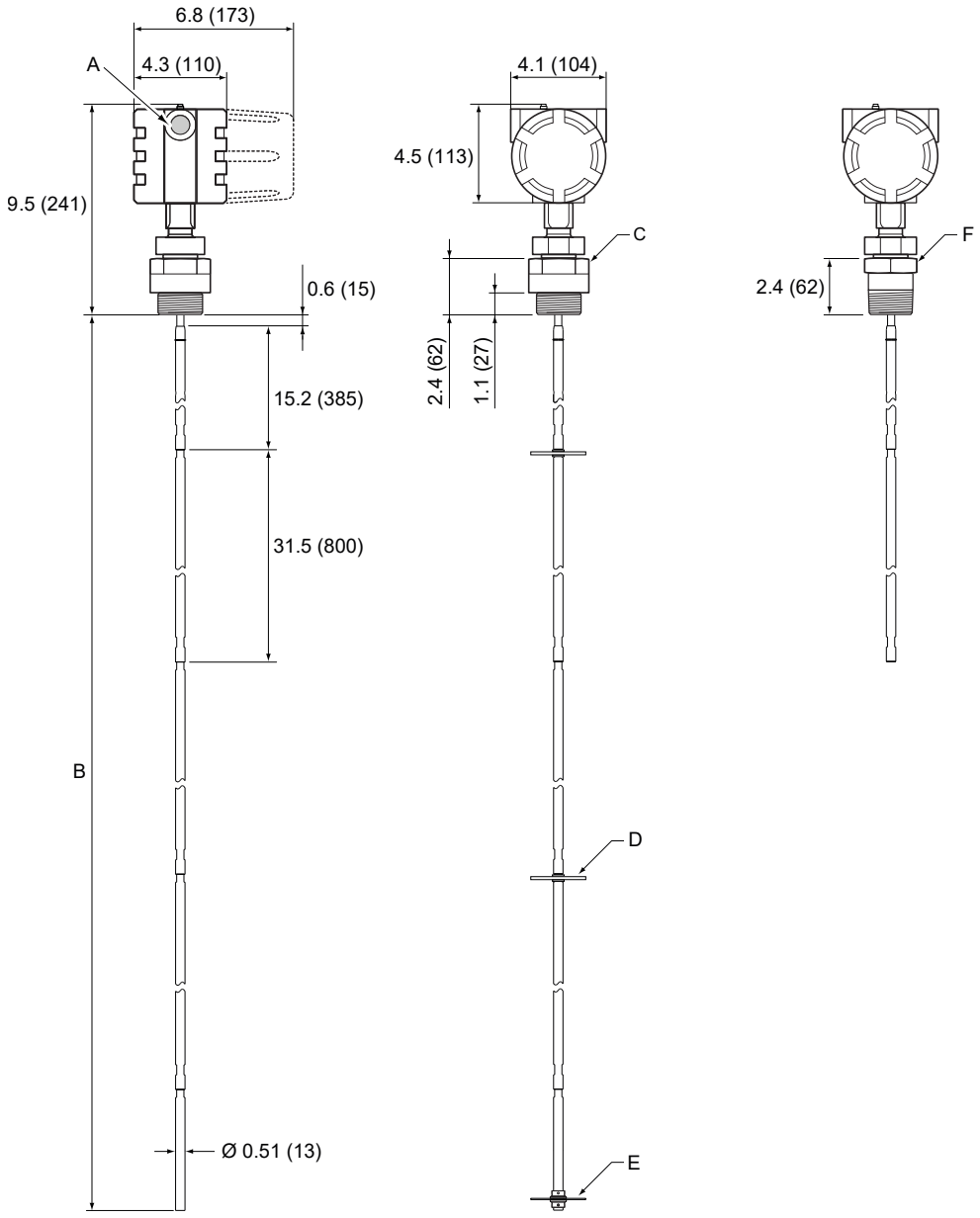

A. ½ - 14 NPT; optional adapters: M20x1.5, PG 13.5
B. L ≤ 20 ft. (6 m)
C. BSP-G 1 in., s52; BSP-G 1½ in., s60
D. Optional: PTFE centering disc
E. Optional: Bottom centering disc (SST or PTFE)
F. NPT 1 in., s52; NPT 1½ in., s52; NPT 2 in., s60

Dimensions are in inches (millimeters).

Figure A-16: Flexible Single Lead Probe with Flange Connection

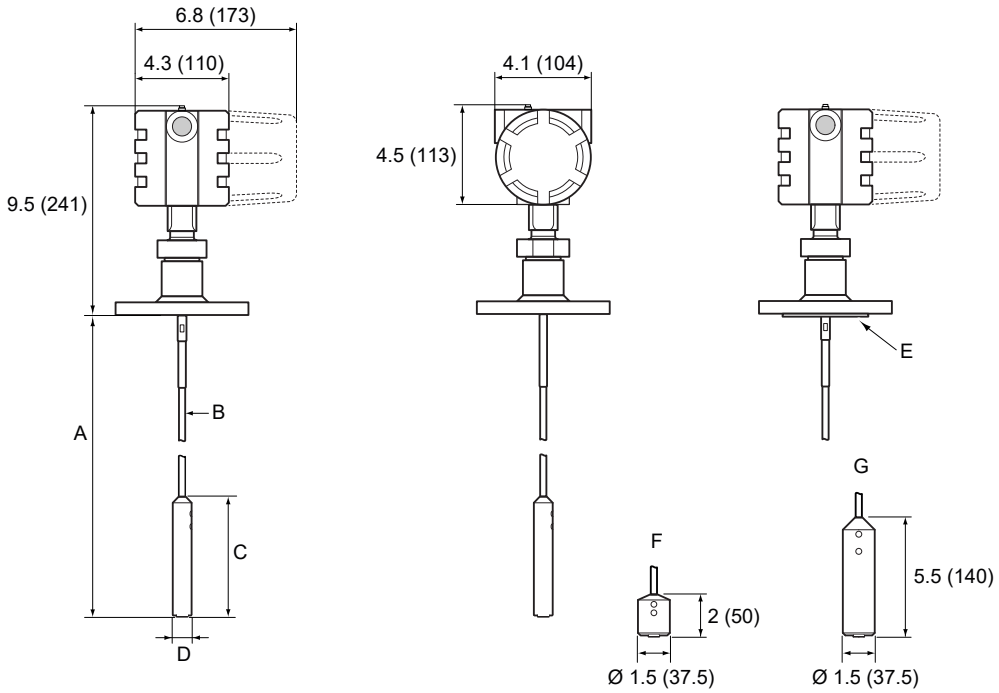

A. L ≤ 77 ft. (23.5 m)
B. Ø 0.16 (4) for SST probe; Ø 0.28 (7) for PTFE covered probe
C. 5.5 (140) for SST probe; 17.1 (435) for PTFE covered probe
D. Ø 0.86 (22) for SST probe; Ø 0.88 (22.5) for PTFE covered probe
E. The PTFE covered probe is designed with a protective plate.
F. Short weight (option W2)
G. Heavy weight (option W3)

Dimensions are in inches (millimeters).

Figure A-17: Flexible Single Lead Probe with Threaded Connection

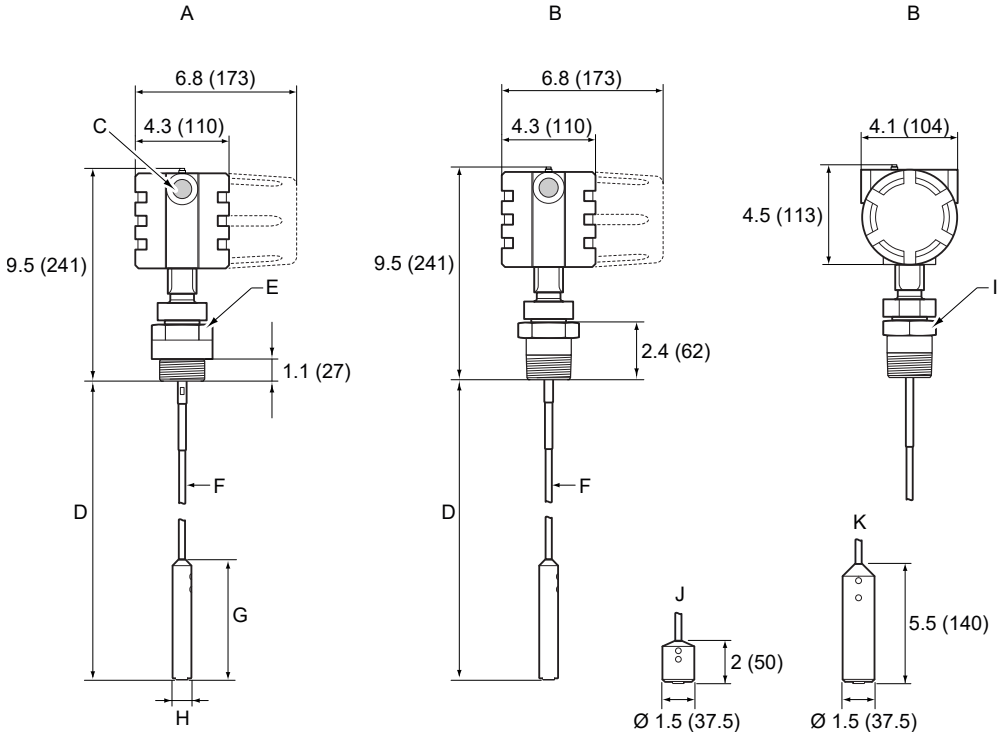

A. G 1/1½ in.
B. NPT 1/1½/2 in.
C. ½ - 14 NPT; optional adapters: M20x1.5
D. L ≤ 77 ft. (23.5 m)
E. s52/s60
F. Ø 0.16 (4) for SST probe; Ø 0.28 (7) for PTFE covered probe
G. 5.5 (140) for SST probe; 17.1 (435) for PTFE covered probe
H. Ø 0.86 (22) for SST probe; Ø 0.88 (22.5) for PTFE covered probe
I. 1 in./1½ in.: s52; 2 in.: s60
J. Short weight (option W2)
K. Heavy weight (option W3)

Dimensions are in inches (millimeters).

Figure A-18: Coaxial Probe with Flange Connection

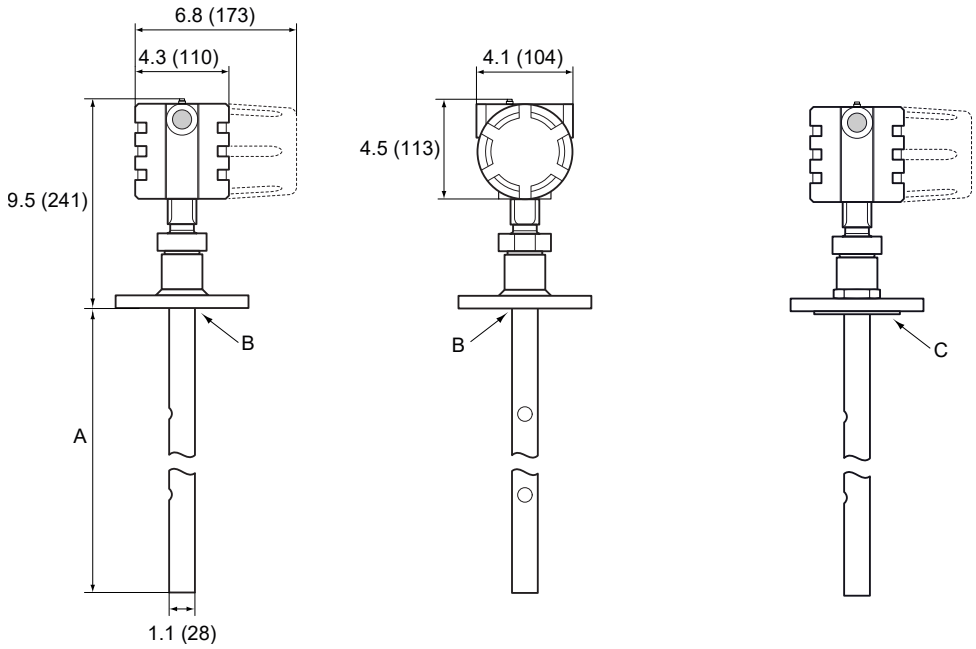

A. L ≤ 20 ft. (6 m)
B. For stainless steel the probe is welded to the flange.
C. The alloy probes are designed with a protective plate.

Dimensions are in inches (millimeters).

Figure A-19: Coaxial Probe with Threaded Connection

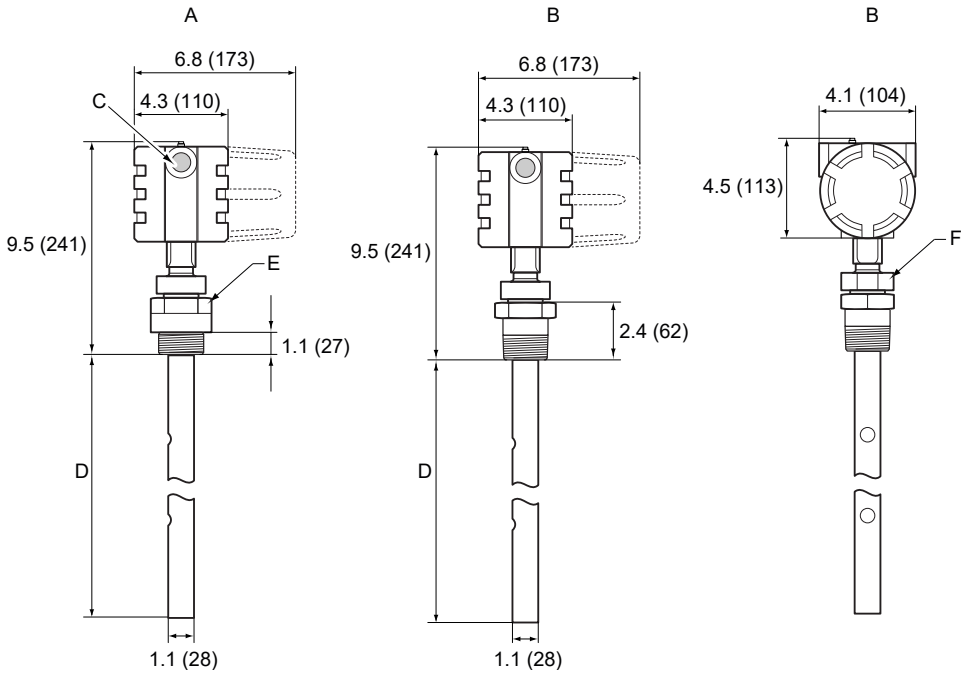

A. G 1/1½ in.
B. NPT 1/1½/2 in.
C. ½ - 14 NPT; optional adapters: M20x1.5
D. L ≤ 20 ft. (6 m)
E. s52/s60
F. 1 in./1½ in.: s52; 2 in.: s60

Dimensions are in inches (millimeters).

Figure A-20: Bracket Mounting

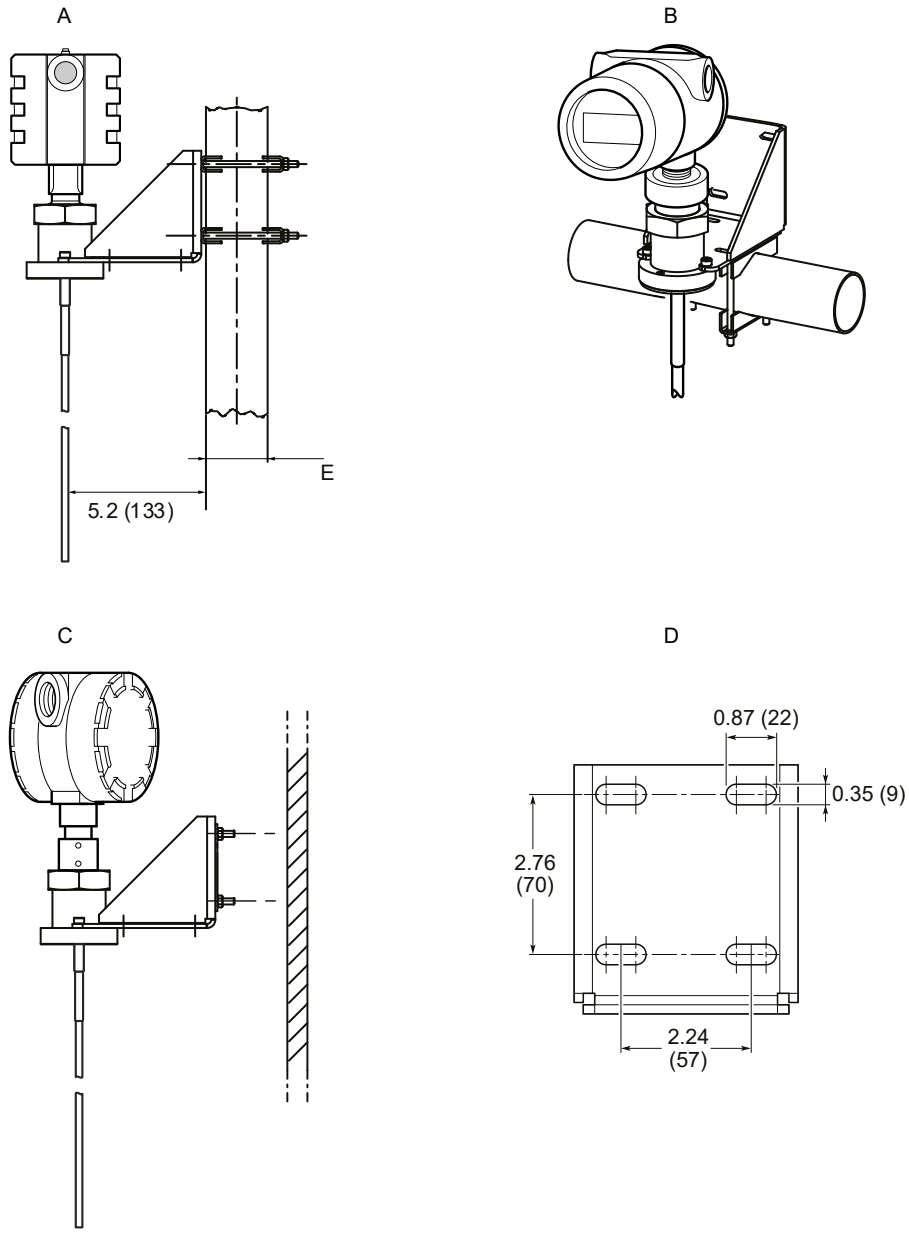

A. Pipe mounting (vertical pipe)
B. Pipe mounting (horizontal pipe)
C. Wall mounting
D. Hole pattern for wall mounting
E. Pipe diameter: maximum 2.5 in. (64 mm)

Dimensions are in inches (millimeters).

Figure A-21: Remote Housing

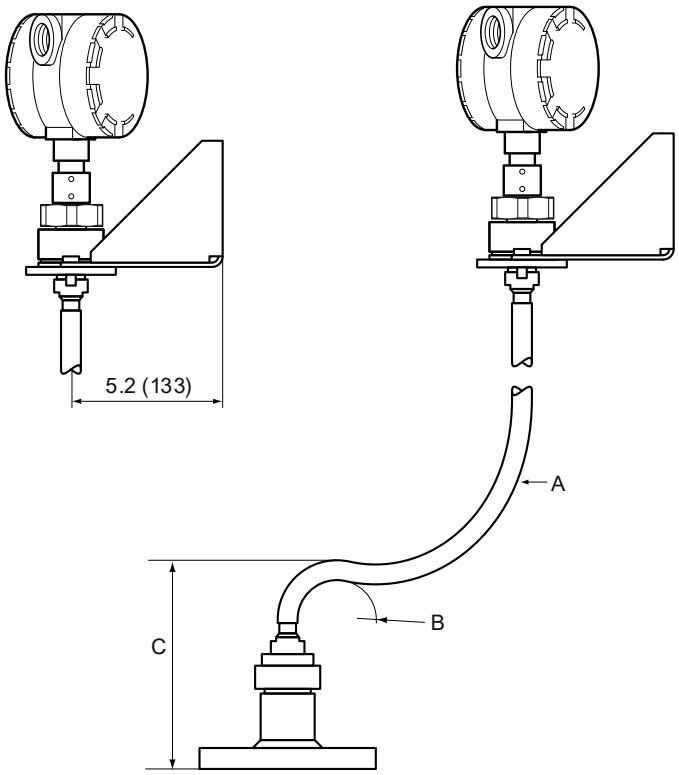

A. 3, 6, 9 ft. (1, 2, or 3 m)
B. R_{min}: 1.4 (35)
C. H_{min}: 7.3 (185)

Dimensions are in inches (millimeters).

A.4.1 Standard flanges

Figure A-22: Flange Connection

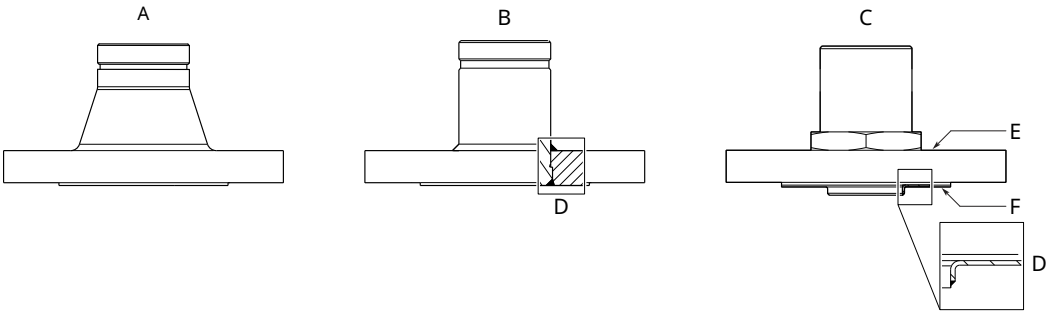

A. Forged one-piece
B. Welded construction
C. Protective plate design
D. Weld
E. Backing flange
F. Protective plate

Table A-17: Standard Flanges

Standard	Face type(1)	Plate surface finish, R_a
ASME B16.5	Raised face	125-250 µin
EN 1092-1	Type A flat face	3.2-12.5 µm
JIS B2220	Raised face	3.2-6.3 µm

(1) Face gasket surface is serrated per mating standard.

Table A-18: Standard Flanges, Protective Plate

Standard	Face type including protective plate	Plate surface finish, R_a
ASME B16.5	Raised face	3.2-6.3 µm
EN 1092-1	Raised face	3.2-6.3 µm
JIS B2220	Raised face	3.2-6.3 µm

A.4.2 Proprietary flanges

Figure A-23: Proprietary Flanges

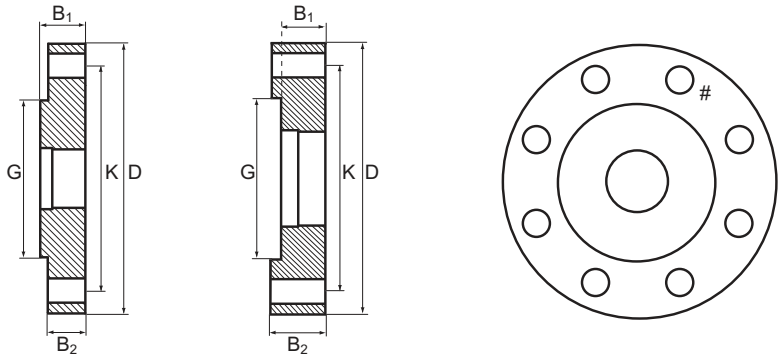

D: Outside diameter

B_1: Flange thickness with gasket surface

B_2: Flange thickness without gasket surface

$F=B_1-B_2$: Gasket surface thickness

G: Gasket surface diameter

Bolts: Number of bolts

K: Bolt hole circle diameter

Dimensions are in inches (millimeters).

Note
Dimensions may be used to aid in the identification of installed flanges. It is not intended for manufacturing use.

Table A-19: Dimensions of Proprietary Flanges

Special flanges(1)	D	B_1	B_2	F	G	# Bolts	K
Fisher™ 249B/259B(2)	9.00 (228.6)	1.50 (38.2)	1.25 (31.8)	0.25 (6.4)	5.23 (132.8)	8	7.25 (184.2)
Fisher 249C(3)	5.69 (144.5)	0.94 (23.8)	1.13 (28.6)	-0.19 (-4.8)	3.37 (85.7)	8	4.75 (120.65)
Masoneilan™(2)	7.51(191.0)	1.54 (39.0)	1.30 (33.0)	0.24 (6.0)	4.02 (102.0)	8	5.87 (149.0)

(1) These flanges are also available in a vented version.
(2) Flange with raised face.
(3) Flange with recessed face.

For information about flange temperature and pressure ratings, see Fisher and Masoneilan flange rating.

A.4.3 Flushing connection rings

Figure A-24: Flushing Connection Rings

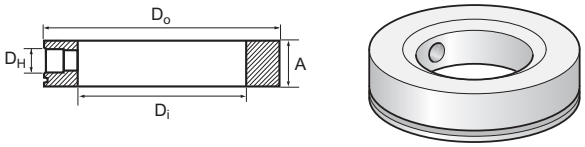

A. Height: 0.97 in. (24.6 mm)

Table A-20: Dimensions of Flushing Connection Rings

Flushing connection rings	D_i	D_o	D_H
2-in. ANSI	2.12 (53.8)	3.62 (91.9)	¼-in. NPT
3-in. ANSI	3.60 (91.4)	5.00 (127.0)	¼-in. NPT
4-in. ANSI/DN100	3.60 (91.4)	6.20 (157.5)	¼-in. NPT
DN50	2.40 (61.0)	4.00 (102.0)	¼-in. NPT
DN80	3.60 (91.4)	5.43 (138.0)	¼-in. NPT

B Configuration parameters

B.1 Menu tree

Figure B-1: HART Communicator Menu Tree Corresponding to Device Revision 2

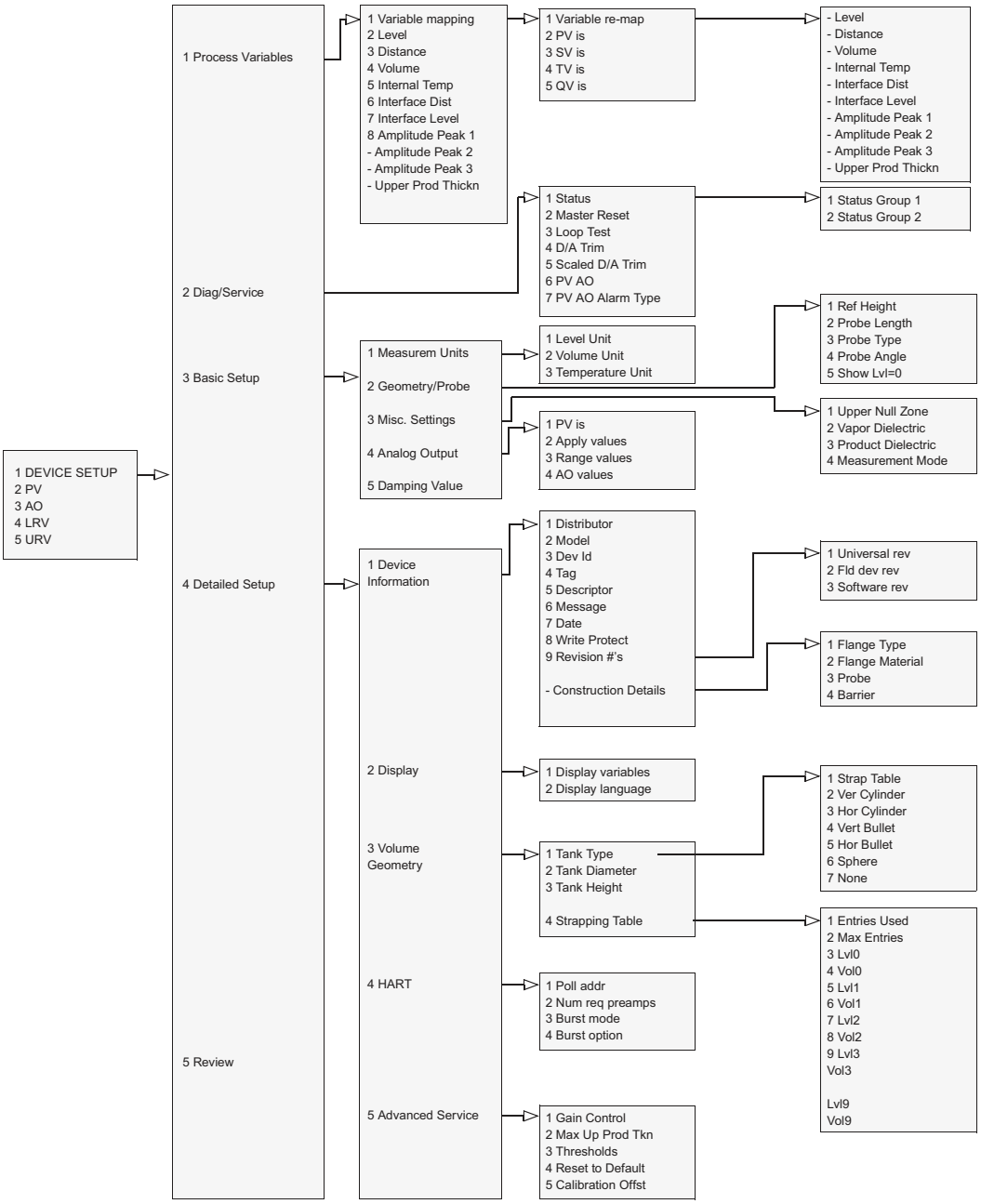

B.2 Setup

B.2.1 Info

Device name

Designation of the current transmitter model.

EPROM ID

Current transmitter database version.

Device type

Designates the transmitter type. 33 is used for the Rosemount 3300 Series.

Device ID

A unique identifier for each Rosemount 3300 Level Transmitter.

Hardware rev

The current revision of the transmitter electronic board.

Software rev

The current revision of the transmitter software that controls measurement, communication, internal checks, etc.

B.2.2 Basics

Variable units

Set the measurement units for length, volume, and temperature. These units are used wherever measurement and configuration data is presented.

Tag

Identifier of up to 8 characters for the device used by host system. The tag is typically a reference number, location, or duty description.

Descriptor

The 16-character descriptor field can be used for any purpose.

Message

The 32-character message field can be used for any purpose, such as providing details of the last configuration change.

B.2.3 Output

Transmitter variables

You can assign up to four transmitter variables. Typically, the Primary Variable (PV) is configured to be Product Level, Interface Level, or Volume.

Other variables like Product Distance, Interface Distance, Upper Product Thickness, etc. are available as well.

For Rosemount 3301, the PV is typically set to be Level. If the transmitter is in the Immerse Probe mode, the PV is normally set to Interface Level.

For Rosemount 3302, the PV is typically set to Interface Level, but Level and other options can also be used.

Upper/lower range value

Set the Lower Range Value (4 mA) and the Upper Range Value (20 mA) to the desired values. Keep in mind that the 20 mA value must be below the upper transition zone. If the 20 mA point is set to a point within the Transition Zone, the full range of the analog output is not used.

Make sure the 20 mA value is set below the Upper Null Zone (UNZ). The UNZ parameter can be used if there are measurement problems in the upper part of the tank. In the default configuration, the UNZ is equal to zero.

The 4 mA point must be above the lower transition zone. If the 4 mA point is set to a point within the transition zone or below the probe end (tank bottom for example), the full range of the analog output is not used.

Figure B-2: Range Values

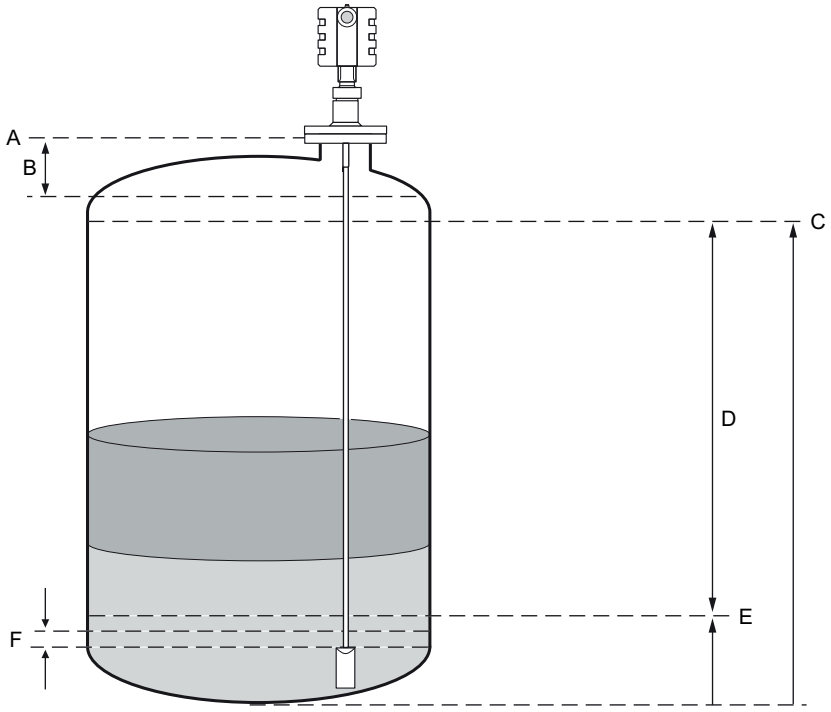

A. Upper reference point
B. Upper transition zone
C. 20 mA Upper Range Value (URV)
D. Range 0-100 %
E. 4 mA Lower Range Value (LRV)
F. Lower transition zone

Modbus® setup

If the transmitter has the Modbus option, configuration of the communication parameters can be set.



Damping value

This parameter defines how fast the transmitter reacts to a change of the level value (step response). The default value is 10 seconds.

A high value makes the level reading steady, while a low value allows the transmitter to respond to rapid level changes (but the presented level value may be less steady).

B.2.4 Probe

Probe type

The transmitter is designed to optimize measurement performance for each probe type. The transmitter automatically makes an initial calibration based on the type of probe that is used.

This parameter is pre-configured at factory and only needs to be set if the probe is changed to another type, or if you have installed a spare transmitter.

Select the type of probe that is mounted to the transmitter. Select User Defined probe if your probe can not be found in the list or if you have done modifications to a standard probe.

Note
Flexible and rigid probes require different radar electronics and cannot be used with the same transmitter head.

Probe length

The probe length is the distance between the Upper Reference Point and the end of the probe. If a weight is used at the end of the probe, it should not be included.

For flexible single lead probes anchored with chuck, the Probe Length should be configured as the distance from the Upper Reference Point to the top of the chuck.

This parameter is pre-configured at factory. The probe length must be changed if the probe is shortened, or if you have ordered a spare transmitter head.

Upper null zone

The Upper Null Zone defines how close to the device's Upper Reference Point a level value is accepted. You can extend Upper Null Zone to block out disturbing echoes close to the tank top, caused by for example a narrow nozzle with rough walls, obstacles close to the probe, or a nozzle that protrudes into the tank.

Figure B-3: Upper Null Zone Is Extended to Block Out Disturbances at the Top of the Tank

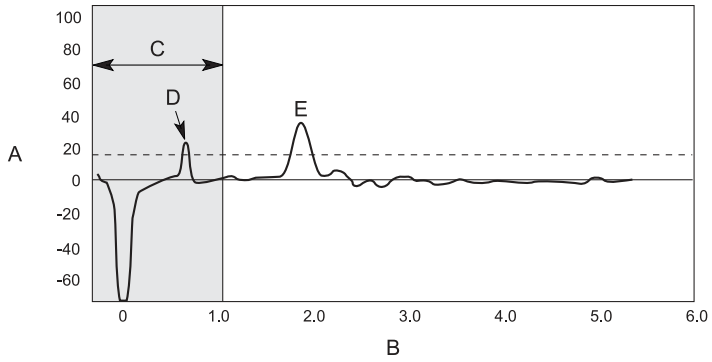

A. Amplitude
B. Distance
C. Upper Null Zone
D. Disturbance
E. Product Surface Peak

Note
Measurements are not performed within the Upper Null Zone.

Related information

Plot the measurement signal
Change the upper null zone

Probe angle (only applicable to rigid probes)

Defines the angle compared to the plumb line at which the device with probe is mounted (0 means that probe is mounted vertically).

Enter the angle between the probe and the vertical line. Do not change this value if the transmitter is mounted with the probe along the vertical line (which is normally the case).

Figure B-4: Probe Angle (α)

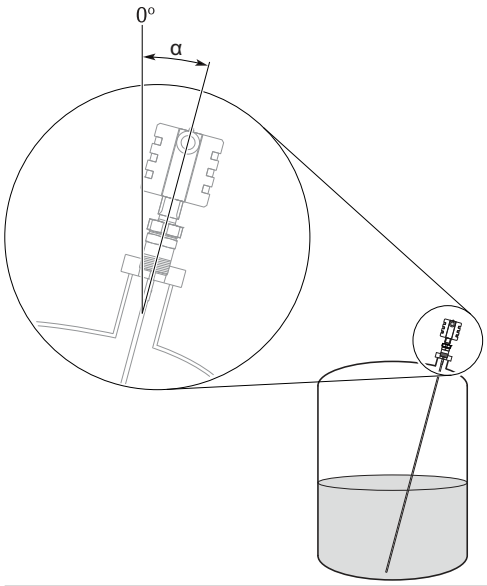

Remote housing

If the transmitter head is mounted apart from the probe, the length of cable between probe and remote housing must be configured.

B.2.5 Geometry

Tank geometry

The basic transmitter configuration includes setting the tank geometry parameters.

Figure B-5: Tank Geometry

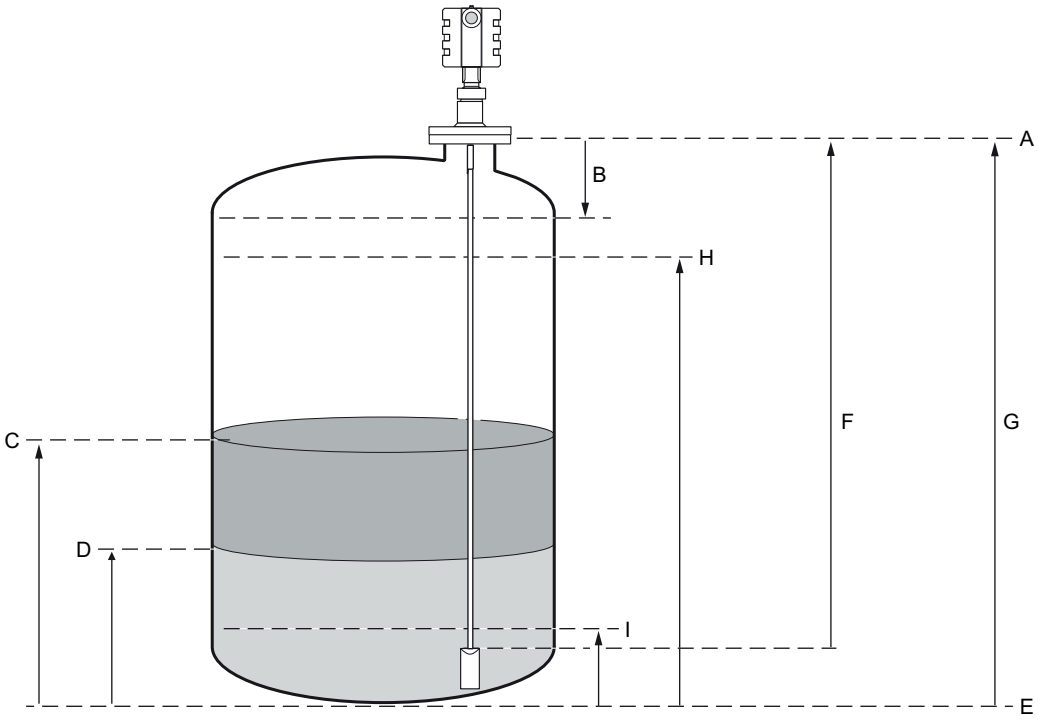

A. Upper reference point
B. Upper Null Zone (UNZ)
C. Product level
D. Interface level
E. Lower reference point
F. Probe length
G. Reference gauge height
H. 20 mA
I. 4 mA

Upper Reference Point

The Upper Reference Point is located at the underside of the threaded adapter, transmitter flange, or Tri Clamp®, as illustrated in Figure B-6.

Figure B-6: Upper Reference Point

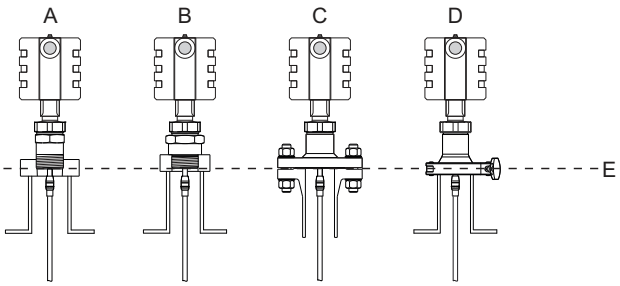

A. NPT
B. BSPP (G)
C. Flange
D. Tri Clamp
E. Upper Reference Point

Reference gauge height

The Reference Gauge Height is the distance from the upper reference point to the bottom of the tank. The transmitter measures the distance to the product surface and subtracts this value from the Reference Gauge Height to determine the level.

The Reference Gauge Height must be set in linear (level) units, such as feet or meters, regardless of primary variable assignment.

Probe length

The probe length is the distance between the Upper Reference Point and the end of the probe. If a weight is used at the end of the probe, it should not be included.

For flexible single lead probes anchored with chuck, the Probe Length should be configured as the distance from the Upper Reference Point to the top of the chuck.

This parameter is pre-configured at factory. The probe length must be changed if the probe is shortened, or if you have ordered a spare transmitter head.

Mounting type

Select option best describing how device is mounted on the tank.

Nozzle Inner diameter

Select the inner diameter for the pipe, chamber or nozzle in which the probe is mounted.

Nozzle height

The distance between the Upper Reference Point (normally the lower side of the device flange) and the end of the nozzle. Note that nozzle may extend into the tank (which should be included in the height).

Measurements below probe end

The Present Level=0... check box controls how the level value is presented when the tank is almost empty. By selecting this check- box, the Level is set equal to zero as long as the product surface is below the probe.

If the check box is not selected, the level value is equal to the difference between reference gauge height R and probe length L when the product surface is below the probe.

Figure B-7: Measurements Below Probe End

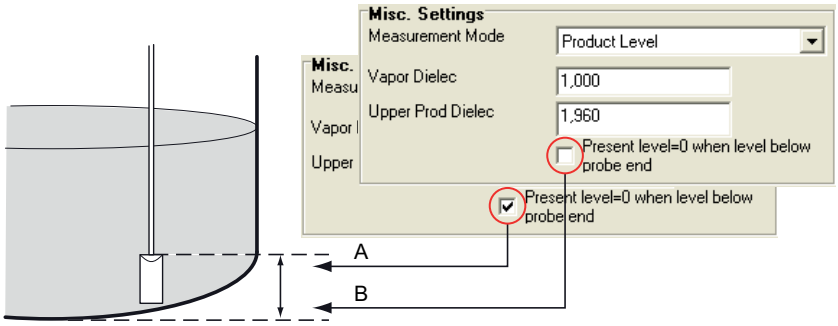

A. Level = 0
B. Level = R - L

B.2.6 Environment

Measurement mode

Normally, the measurement mode does not need to be changed. The transmitter is pre-configured according to the specified model:

Table B-1: Measurement Mode

Model	Measurement mode
3301	Level(1), interface immersed probe
3302	Level, level and interface(1), interface immersed probe

(1) Default setting.

Interface immersed probe is used for applications where the probe is fully immersed in liquid. In this mode the transmitter ignores the upper product level.

Note
Use interface immersed probe only for applications where interface is measured for a fully immersed probe.

Upper product dielectric constant

The Upper Product Dielectric Constant (DC) should be entered as accurately as possible. The dielectric constant of the upper product is essential for calculating the interface level and the upper product thickness. In addition, this value is used for setting the automatically calculated amplitude thresholds. The default value for the Upper Product Dielectric Constant is 2.

For level measurements, the Upper Product Dielectric Constant parameter corresponds to the dielectric constant of the product in the tank.

If the dielectric constant of the lower product is significantly smaller than the dielectric constant of water, you may need to make special adjustments. The dielectric constant of water is 80.

Use the dielectric constant chart

The Rosemount Configuration Tool (RCT) software includes a Dielectric Chart which lists the dielectric constants of a wide range of products.

Procedure

1. Select **View** → **Dielectric** → **Dielectric Chart**.
2. In the **Advanced** section, click the **Dielectric Chart** icon.

Dielectric constant calculator

The dielectric calculator in RCT allows you to calculate the dielectric constant of the upper product based on the following input:

- Actual upper product thickness
- The dielectric constant value stored in the transmitter
- The upper product thickness presented by the transmitter

Vapor dielectric constant

In some applications, there is heavy vapor above the product surface having a significant influence on the level measurement. In such cases the vapor dielectric can be entered to compensate for this effect.

The default value is equal to 1, which corresponds to the dielectric constant of vacuum. Normally this value does not need to be changed since the effect on measurement performance is very small for most vapors.

Max upper product thickness

Configure the maximum possible thickness for the upper product in this tank. This is the maximum thickness the device will expect for this tank.

B.2.7 Volume

Tank type

You can choose one of the following options:

- Strap table
- Vertical cylinder
- Horizontal cylinder
- Vertical bullet
- Horizontal bullet
- Sphere
- None

Strapping table

Strapping tables can be used for irregularly shaped tanks, to eliminate errors due to bulging when product is added to a tank, or if a pre-defined tank type does not provide sufficient accuracy.

Strapping table requires entering level-volume pairs in a table (maximum 10 points). Use most of the strapping points in regions where the tank shape is non-linear. Starting at the

bottom of the tank, for each new point, enter the total volume up to the specified level value.

Standard tank shapes

Figure B-8: Standard Tank Shapes

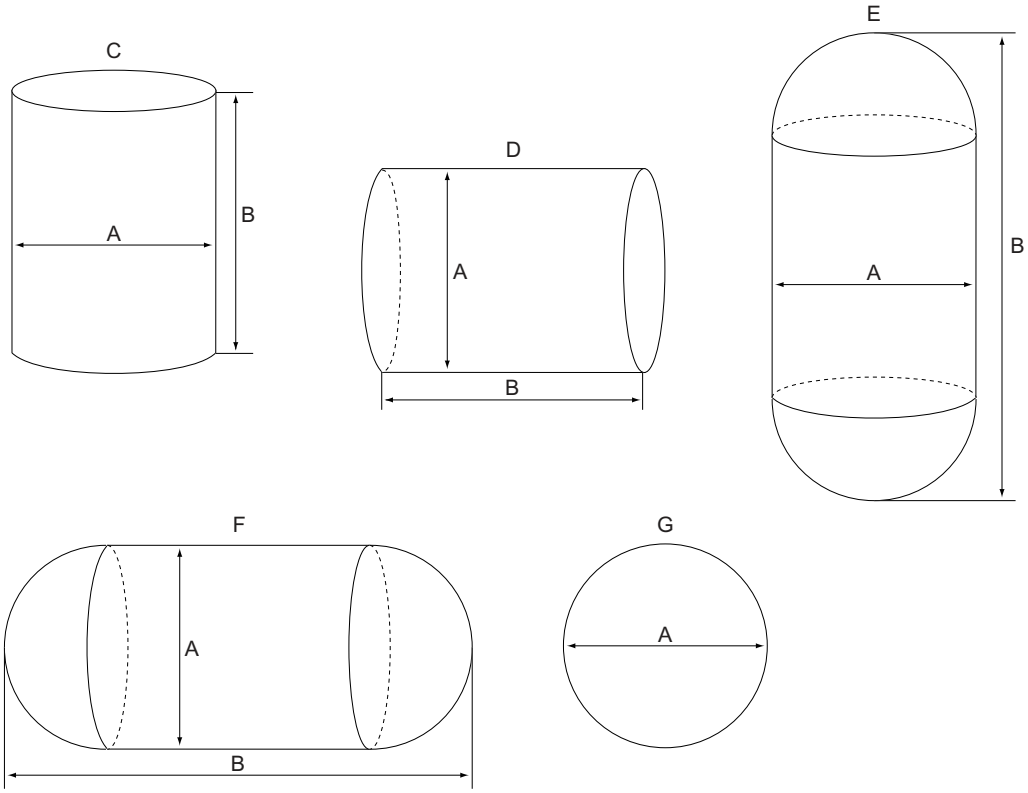

A. Diameter
B. Height
C. Vertical cylinder
D. Horizontal cylinder
E. Vertical bullet
F. Horizontal bullet
G. Sphere

Vertical cylinder

Vertical cylinder tanks are specified by diameter and height.

Horizontal cylinder

Horizontal cylinders are specified by diameter and height.

Vertical bullet

Vertical bullet tanks are specified by diameter and height. The volume calculation model for this tank type assumes that the radius of the bullet end is equal to the diameter/2.

Horizontal bullet

Horizontal bullets are specified by diameter and height. The volume calculation model for this tank type assumes that the radius of the bullet end is equal to the diameter/2.

Sphere

Spherical tanks are specified by diameter.

B.2.8 Display

Select which variables to be displayed and the desired language to be used. The display toggles between the selected variables every two seconds.

B.2.9 Signal Quality Metrics

The Signal Quality Metrics tab contains information about signal quality and surface/noise margin.

C HART® to Modbus® Converter (HMC) module

The Rosemount 3300 Level Transmitter is a Modbus compatible measurement device that supports communication with a Remote Terminal Unit (RTU) using a subset of read, write, and diagnostic commands used by most Modbus compatible host controllers. The transmitter also supports communication through Levelmaster and Modbus ASCII protocols.

The HART to Modbus Converter (HMC) module is located inside the Rosemount 3300 Level Transmitter enclosure and provides power to and communicates with the transmitter through a HART® interface.

Figure C-1: System Overview

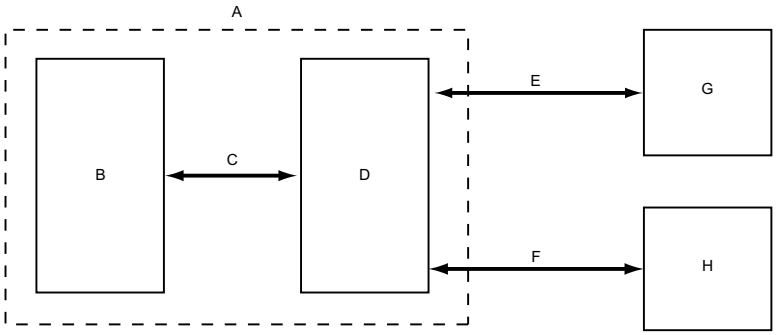

A. Rosemount 3300 enclosure
B. Rosemount 3300 electronics
C. HART signals
D. HART to Modbus Converter
E. Modbus and Levelmaster communication
F. HART signals
G. Remote Terminal Unit
H. RCT/Handheld communicator

During normal operation, the HMC “mirrors” the contents of process variables from the Rosemount 3300 Level Transmitter to the Modbus registers. To configure the Rosemount 3300 Level Transmitter, it is possible to connect a configuration tool to the HMC.

C.1 Modbus® communication protocol configuration

The Rosemount 3300 Level Transmitter can communicate with RTUs using Modbus RTU (often referred to as just “Modbus”), Modbus ASCII, and Levelmaster (also known as “ROS,” “Siemens,” or “Tank” protocol).

Table C-1: List of RTU Supported Protocols

RTU	Protocols
ABB Totalflow	Modbus RTU, Levelmaster
Bristol™ ControlWave™ Micro	Modbus RTU
Emerson ROC800 Series	Modbus RTU, Levelmaster(1)
Emerson FloBoss™ 107	Modbus RTU, Levelmaster(1)
Kimray® Inc. DACC™ 2000/3000	Levelmaster
ScadaPack	Modbus RTU
Thermo Electron Autopilot	Modbus RTU, Levelmaster

(1) Levelmaster protocol should be used when using the Emerson Digital Level Sensor (DLS) User Program or Application Module together with the device. Use Modbus RTU in other cases.

Modbus ASCII is not commonly used, since it doubles the amount of bytes for the same message as the Modbus RTU.

If you do not have any of these RTUs, check your RTU manual to see which protocols it supports.

C.1.1 Modbus® RTU communication setup

The Rosemount 3300 is configured with the default Modbus RTU address 246, and with the following Modbus RTU communication parameter default settings:

Table C-2: Modbus RTU Communication Parameters

Parameter	Default Value	Configurable Values
Baud Rate	9600	1200, 2400, 4800, 9600, 19200
Start Bits(1)	One	One
Data Bits(1)	Eight	Eight
Parity	None	None, Odd, Even
Stop Bits	One	One or Two
Address range	246	1-255

(1) Start Bits and Data Bits cannot be changed.

To reset the communication parameters to default Modbus RTU settings, use the following Modbus Message:

```
HMC
```

Modbus RTU parameter configuration

You want to use address 44 for the Rosemount 3300 Level Transmitter, and the following communication parameters are used by the host:

Table C-3: Communication Parameters Used by the Host (Example)

Parameter	Value
Baud Rate	4800
Start Bits	One
Data Bits	Eight
Parity	Odd
Stop Bits	Two

To configure the Rosemount 3300 Level Transmitter to communicate with the Host in this example, the following text string is written to the HART Slave 1 message area:

```
HMC A44 B4800 PO S2.
```

HMC These three letters are used for safety and will eliminate the risk of changing the configuration data by mistake.

A44 A indicates that the following number is the new address (address 44). Leading zeroes are not needed.

B4800 B indicates that the following number is the new baud rate (1200, 2400, 4800, 9600, 19200).

PO P identifies the following letter as parity type (O = odd, E = even, and N = none).

S2 S indicates that the following figure is the number of stop bits (1 = one, 2 = two).

Only values that differ from the current values need to be included. For example, if only the address is changed, the following text string is written into the 3300 (HART Slave 1) message area:

```
HMC A127,
```

indicates that 127 is the new address.

C.1.2 Levelmaster communication setup

The default and configurable parameter values can be found in Table C-4.

Table C-4: Levelmaster Communication Parameters

Parameter	Default value	Configurable value
Baud Rate	9600	1200, 2400, 4800, 9600, 19200
Start Bits	One	One
Data Bits	Seven	Seven, Eight
Parity	None	None, Odd, Even
Stop Bits	One	One or Two
Address	1	1-99

To reset the communication parameters to default Levelmaster settings, use the following Modbus Message:

```
HMC M2
```

Levelmaster parameter configuration

You want to use address 2 for the Rosemount 3300 Level Transmitter and the host uses the following parameters:

Table C-5: Levelmaster Communication Parameters

Parameter	Value
Baud Rate	9600
Start Bits	One
Data Bits	Seven
Parity	None
Stop Bits	One

To configure the Rosemount 3300 Level Transmitter to communicate with the host in this example, the following text string is written to the Modbus message area:

```
HMC M2 A2 B9600 D7 PN S1.
```

Note
Include all the parameters when writing to the message area.

Note that an address must be unique on the bus.

HMC These three letters are used for safety and will eliminate the risk of changing the configuration data by mistake.

M2 This means that the Levelmaster protocol is to be used.

A2 A indicates that the following is the new address (address 2). Leading zeroes are not needed.

B9600 B indicates that the following number is the new baud rate (1200, 2400, 4800, 9600, 19200).

D7 D indicates that the following data bits are to be used (7 = seven, 8 = eight).

PN P identifies the following letter as parity type (O = odd, E = even, and N = none).

S1 S indicates that the following figure is the number of stop bits (1 = one, 2 = two).

Note
Start bits are not configurable and cannot be set.

Implemented Levelmaster functions

See Table C-6 for a description of the implemented Levelmaster functions in the HMC.

Table C-6: Implemented Functions of Levelmaster Protocol

Input format	Description	Output format
UnnN?	Return ID number	UnnNnnCcccc
UnnNmm	Set ID number	UnnNOKCcccc
UnnF?	Return number of floats	UnnFxCcccc
UnnFx?	Set number of floats	UnnFOKCcccc
Unn?	Return floats and other data	UnnDddd.ddFfffEeeeeWwwwCccc(1)

(1) In this case, number of floats is set to 1. If number of floats is set to 2, the Output Format would be: UnnDddd.ddDddd.ddFfffEeeeeWwwwCcccc

Note
If one float is sent, it is “Float1”. If two floats are sent, it is “Float 1” before “Float 0”.

Table C-7: Letters and Expressions

Letter	Description
nn	nn is used to identify slave to respond; nn is a number 00-99 or ** (wildcard). The EmulCtrl Address Holding register can be configured to a higher value than 99. In that case, the address will be truncated to 99.
mm	mm is the new ID number for the slave; mm is a number 00-99.
x	x is the number of floats returned when slave receives Unn?, x is a number 0-2.
cccc	Is the 16 bit CRC checksum, cccc are hexadecimal characters.
ddd.dd	ddd.dd is the distance value from slave 1. Note that the first d can also be a ‘-’ (minus).
Float 1	Slave 1 PV.
Float 0	Slave 1 SV.
fff	The temperature value. Configured by Holding Register 3208 in HMC.(1)
eeee	An error value. Bit 0: Invalid SV value (Float 0). Bit 8: Invalid Temperature value. Bit 12: Invalid PV value (Float 1).
Wwww	A warning value, not used in this implementation.

(1) Any of the four available variables from any of the five HART slaves can be selected as the temperature source. The least four significant bits (bit 0-3) select the variable number. Bits 4-7 select the HART slave address. If invalid values are used, the temperature value will be invalid, with no Error bit set. For example, if we want to use FV from HART Slave 3 as temperature source, we have to write the value 34 Hex (52 decimal).

C.1.3 Modbus ASCII communication setup

The parameter, default, and configurable values are shown in Table C-8.

Table C-8: Modbus ASCII Communication Parameters

Parameter	Default value	Configurable values
Baud Rate	9600	1200, 2400, 4800, 9600, 19200
Start Bits	One	One
Data Bits	Seven	Seven, Eight
Parity	None	None, Odd, even
Stop Bits	One	One or Two
Address	1	1-255

To reset the communication parameters to default Modbus ASCII settings, use the following Modbus message:

```
HMC M1
```

Modbus ASCII parameter configuration

You want to use address 246 for the Rosemount 3300 Level Transmitter and the host uses the following parameters:

Table C-9: Parameters Used by the Host (In Case of Modbus ASCII, Example)

Parameter	Value
Baud Rate	9600
Start Bits	One
Data Bits	Seven
Parity	None
Stop Bits	One

To configure the Rosemount 3300 Level Transmitter to communicate with the host in this example, the following text string is written to the Modbus message area:

```
HMC M1 A246 B9600 D7 PN S1.
```

Note
Include all the parameters when writing to the message area.

Note that an address must be unique on the bus.

HMC These three letters are used for safety and will eliminate the risk of changing the configuration data by mistake.

M1 This means that the Modbus ASCII protocol is to be used.

A246 A indicates that the following number is the new address (address 246). Leading zeroes are not needed.

B9600 B indicates that the following number is the new baud rate (1200, 2400, 4800, 9600, 19200).

D7 D indicates that the following data bits are to be used (7 = seven, 8 = eight).

PN P identifies the following letter as parity type (O = odd, E = even, and N = none).

S1 S indicates that the following figure is the number of stop bits (1 = one, 2 = two).

Note
Start bits are not configurable and cannot be set.

C.2 Common Modbus® host configuration

When using Modbus RTU or Modbus ASCII, the registers to receive status and variables must be configured in the host system.

The transmission of single-precision (4 bytes) IEEE 754 floating point numbers can be rearranged in different byte orders specified by the Floating Point Format Code. The format code information, stated for each Remote Terminal Unit (RTU) respectively, specifies which registers to poll from the Rosemount 3300 Level Transmitter in order for the RTU to correctly interpret floating point numbers. The byte transmission order for each format code is demonstrated in Table C-10.

Table C-10: Byte Transmission Order is Specified by the Floating Point Format Code

Format Code	Byte transmission order	Description
0	[AB] [CD]	Straight word order, most significant byte first
1	[CD] [AB]	Inverse word order, most significant byte first
2	[DC] [BA]	Inverse word order, least significant byte first
3	[BA] [DC]	Straight word order, least significant byte first

Note
Some Modbus hosts cannot read the information described here using Input Registers (Modbus function code 4). The Input Register information can also be read using Holding Register (Function code 3). In this case, Input Register number + 5000 is used as Holding Register number.

Between host system and device, it is recommended to use 60 seconds or less between polls, and three retries.

C.2.1 Input registers

The register area starting with 1300 can be configured to have any of the four format codes. The configuration is done by setting FloatingPointFormatCode register (holding register 3000) to 0-3. This configuration can be done with the Rosemount Radar Master program.

Note
Depending on the slave number the Rosemount 3300 Level Transmitter is using, different registers must be used with the default slave number being 1. Slave number is determined by the HART address.

Table C-11: Output Variables for the Configurable Floating Point Format (Default Code 1)

Register Name	Register Number	Note
Slave 1 Status Conf	1300	Bit information in bitfield. Bit 0: Invalid Measurement Slave 1 PV. Bit 1: Invalid Measurement Slave 1 Non PV. Bit 2: Invalid Measurement Slave 1 Non PV. Bit 3: Invalid Measurement Slave 1 Non PV. Bit 14: HART bus busy (slave in burst or other master present) Bit 15: HTM Task not running (option not available). **Note** Bit 1-3 is set when Invalid Measurement of Slave 1 Non PV. i.e. all three bits are set simultaneously.
Slave 1 PV Conf	1302	Primary variable from slave 1 represented in IEEE 754 format, using the byte order set in the FloatingPointFormatCode register.
Slave 1 SV Conf	1304	Secondary variable from slave 1 represented in IEEE 754 format, using the byte order set in the FloatingPointFormatCode register.
Slave 1 TV Conf	1306	Tertiary variable from slave 1 represented in IEEE 754 format, using the byte order set in the FloatingPointFormatCode register.
Slave 1 FV Conf	1308	Fourth variable from slave 1 represented in IEEE 754 format, using the byte order set in the FloatingPointFormatCode register.
Slave 2 data	1310-1318	Same data as for Slave 1.
Slave 3 data	1320-1328	Same data as for Slave 1.
Slave 4 data	1330-1338	Same data as for Slave 1.
Slave 5 data	1340-1348	Same data as for Slave 1.

The Rosemount 3300 Level Transmitter register area starting with register 2000 is used for hosts that require Floating Point Format Code 0 (see Table C-12).

Table C-12: Output Variables for Floating Point Format Code 0

Register Name	Register Number	Note
Slave 1 Status	2000	Bit information in bitfield: Bit 0: Invalid Measurement Slave 1 PV. Bit 1: Invalid Measurement Slave 1 SV. Bit 2: Invalid Measurement Slave 1 TV. Bit 3: Invalid Measurement Slave 1 FV. Bit 14: HART bus busy (slave in burst or other master present) Bit 15: HTM Task not running (option not available). **Note** Bit 1-3 is set when Invalid Measurement of Slave 1 Non PV, i.e. all three bits are set simultaneously.
Slave 1 PV	2002	Primary variable from slave 1 represented in IEEE 754 format, using Floating Point Format Code 0.
Slave 1 SV	2004	Secondary variable from slave 1 represented in IEEE 754 format, using Floating Point Format Code 0.
Slave 1 TV	2006	Tertiary variable from slave 1 represented in IEEE 754 format, using Floating Point Format Code 0.
Slave 1 FV (QV)	2008	Fourth variable from slave 1 represented in IEEE 754 format, using Floating Point Format Code 0.

Floating Point Format Codes 2 and 3 use register areas 2100 and 2200, respectively (see Table C-13 and Table C-14).

Table C-13: Output Variables for Floating Point Format Code 2

Register Name	Register Number	Note
Slave 1 Status	2100	Bit information in bitfield: Bit 0: Invalid Measurement Slave 1 PV. Bit 1: Invalid Measurement Slave 1 SV. Bit 2: Invalid Measurement Slave 1 TV. Bit 3: Invalid Measurement Slave 1 FV. Bit 14: HART bus busy (slave in burst or other master present) Bit 15: HTM Task not running (option not available). **Note** Bit 1-3 is set when Invalid Measurement of Slave 1 Non PV, i.e. all three bits are set simultaneously.
Slave 1 PV	2102	Primary variable from slave 1 represented in IEEE 754 format, using Floating Point Format Code 2.
Slave 1 SV	2104	Secondary variable from slave 1 represented in IEEE 754 format, using Floating Point Format Code 2.
Slave 1 TV	2106	Tertiary variable from slave 1 represented in IEEE 754 format, using Floating Point Format Code 2.
Slave 1 FV (QV)	2108	Fourth variable from slave 1 represented in IEEE 754 format, using Floating Point Format Code 2.

Table C-14: Output Variables for Floating Point Format Code 3

Register Name	Register Number	Note
Slave 1 Status	2200	Bit information in bitfield: Bit 0: Invalid Measurement Slave 1 PV. Bit 1: Invalid Measurement Slave 1 SV. Bit 2: Invalid Measurement Slave 1 TV. Bit 3: Invalid Measurement Slave 1 FV. Bit 14: HART bus busy (slave in burst or other master present) Bit 15: HTM Task not running (option not available). **Note** Bit 1-3 is set when Invalid Measurement of Slave 1 Non PV, i.e. all three bits are set simultaneously.
Slave 1 PV	2202	Primary variable from slave 1 represented in IEEE 754 format, using Floating Point Format Code 3.
Slave 1 SV	2204	Secondary variable from slave 1 represented in IEEE 754 format, using Floating Point Format Code 3.
Slave 1 TV	2206	Tertiary variable from slave 1 represented in IEEE 754 format, using Floating Point Format Code 3.
Slave 1 FV (QV)	2208	Fourth variable from slave 1 represented in IEEE 754 format, using Floating Point Format Code 3.

C.2.2 Measurement units

Measurement units for the various HART slaves are stored in input registers as a Unit Code presented in Table C-15.

Table C-15: Measurement Units and Corresponding Input Registers

Register Name	Register Number
Slave 1 PV Units	104
Slave 1 SV Units	108
Slave 1 TV Units	112
Slave 1 FV (QV) Units	116

Conversion from Unit Code to measurement unit is given in Table C-16.

Table C-16: Conversion of Unit Code to Measurement Unit

Measurement	Unit Code	Measurement Unit
Volume	40	US Gallon
	41	Liters
	42	Imperial Gallons
	43	Cubic Meters
	46	Barrels
	111	Cubic Yards
	112	Cubic Feet
	113	Cubic Inches
Length	44	Feet
	45	Meters
	47	Inches
	48	Centimeters
	49	Millimeters
Temperature	33	Degree Fahrenheit
	32	Degree Celsius

C.3 Specific Modbus® host configuration

The Remote Terminal Unit needs to be configured to communicate and correctly interpret data when reading input registers from the Rosemount 3300 Level Transmitter.

Baud rate

The specified Baud Rates are recommendations. If other Baud Rates are used, make sure the Rosemount 3300 Level Transmitter and the RTU are configured for the same communication speed.

Floating point format code

See Common Modbus® host configuration.

RTU data type

The RTU data type specifies which configuration to use in the RTU in order for the RTU to correctly interpret a floating point number transmitted from the Rosemount 3300 Level Transmitter with Modbus.

Input register base number

Data registers in the Rosemount 3300 Level Transmitter with Modbus are numbered exactly as they are transmitted in the Modbus communication. Some RTUs use different naming conventions and to configure the RTU to poll the correct registers from the Rosemount 3300 Level Transmitter Modbus, an Input Register Base Number is stated for each RTU respectively. For example, if the input register base number is 1 for the RTU, the Rosemount 3300 Level Transmitter Modbus input register 1302 has to be entered in the RTU address as input register 1303.

C.3.1 Emerson ROC800 Series

Figure C-2: Wiring Diagram for Connecting Rosemount 3300 Modbus to Emerson ROC800 Series

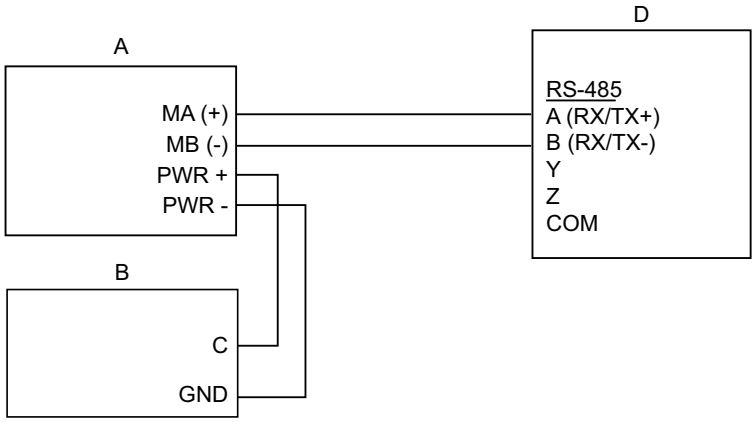

A. Rosemount 3300 Modbus
B. Power supply
C. + 8 to + 30 Vdc (max. rating)
D. ROC800 Series

Table C-17: Parameter Values (In Case of Emerson ROC800 Series)

Parameter	Value
Baud Rate	9600
Floating Point Format Code	0
RTU Data Type	Conversion Code 66
Input Register Base Number	0

The Input Register Base Number needs to be added to the Input Register address of the Rosemount 3300 Level Transmitter. In this case, register 1300 needs to have 1300 entered as the address.

C.3.2 Emerson FloBoss 107

Figure C-3: Wiring Diagram for Connecting Rosemount 3300 Modbus to Emerson FloBoss 107

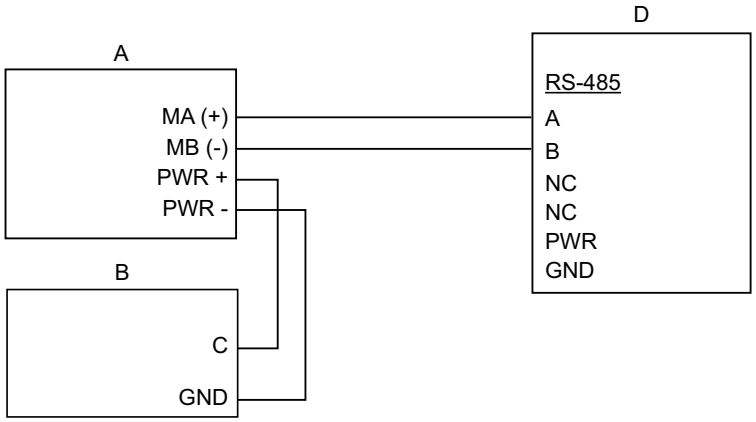

A. Rosemount 3300 Modbus
B. Power supply
C. + 8 to + 30 Vdc (max. rating)
D. FloBoss 107

Table C-18: Parameter Values (In Case of Emerson FloBoss 107)

Parameter	Value
Baud Rate	9600
Floating Point Format Code	0
RTU Data Type	Conversion Code 66
Input Register Base Number	0

The Input Register Base Number needs to be added to the Input Register address of the Rosemount 3300 Level Transmitter. In this case, register 1300 needs to have 1300 entered as the address.

C.3.3 ABB TotalFlow

Figure C-4: Wiring Diagram for Connecting Rosemount 3300 Modbus to ABB TotalFlow

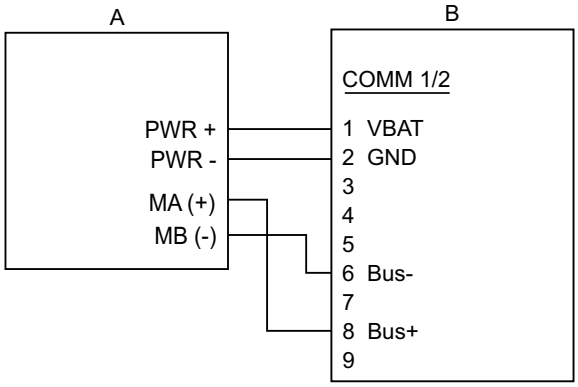

A. Rosemount 3300 Modbus
B. TOTALFLOW

Table C-19: Parameter Values (In Case of ABB TotalFlow)

Parameter	Value
Baud Rate	9600
Floating Point Format Code	0
RTU Data Type	16 Bit Modicon
Input Register Base Number	1

The Input Register Base Number needs to be added to the Input Register address of the Rosemount 3300 Level Transmitter. In this case, register 1302 needs to have 1303 entered as the address etc.

C.3.4 Thermo Electron Autopilot

Figure C-5: Wiring Diagram for Connecting Rosemount 3300 Modbus to Thermo Electron Autopilot

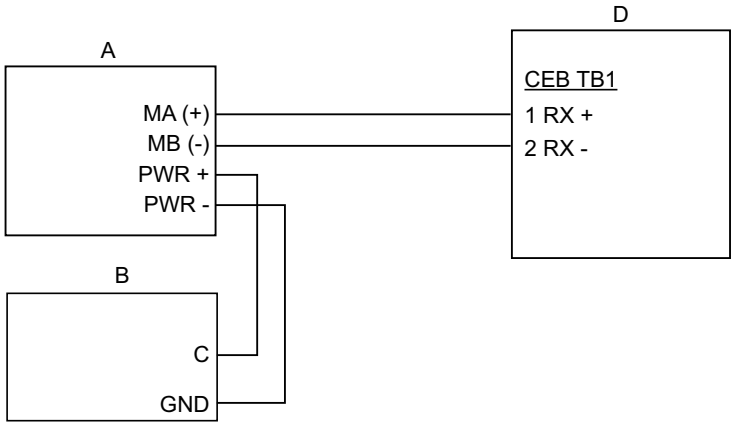

A. Rosemount 3300 Modbus
B. Power supply
C. + 8 to + 30 Vdc (max. rating)
D. AutoPILOT

Table C-20: Parameter Values (In Case of Thermo Electron Autopilot)

Parameter	Value
Baud Rate	9600
Floating Point Format Code	1
RTU Data Type	IEEE Flt 2R
Input Register Base Number	0

The Input Register Base Number needs to be added to the Input Register address of the Rosemount 3300 Level Transmitter. In this case, register 1302 needs to have 1302 entered as the address etc.

C.3.5 Bristol ControlWave Micro

Figure C-6: Wiring Diagram for Connecting Rosemount 3300 Modbus to Bristol ControlWave Micro

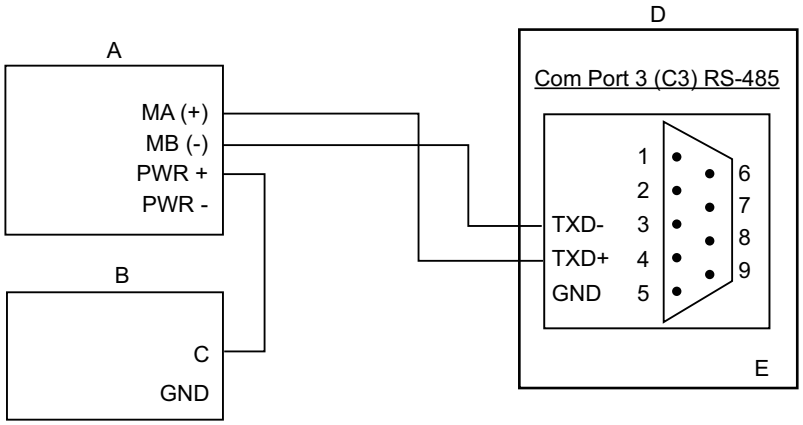

A. Rosemount 3300 Modbus
B. Power supply
C. + 8 to + 30 Vdc (max. rating)
D. ControlWave Micro
E. DB9 Male

Table C-21: Parameter Values (In Case of Bristol ControlWave Micro)

Parameter	Value
Baud Rate	9600
Floating Point Format Code	2 (FC 4)
RTU Data Type	32-bit registers as 2 16-bit registers
Input Register Base Number	1

The Input Register Base Number needs to be added to the Input Register address of the Rosemount 3300 Level Transmitter. In this case, register 1302 needs to have 1303 entered as the address etc.

C.3.6 ScadaPack

Figure C-7: Wiring Diagram for Connecting Rosemount 3300 Modbus to SCADAPack 32

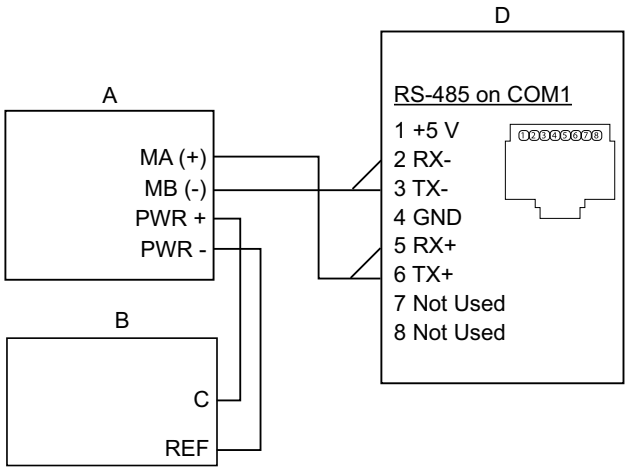

A. Rosemount 3300 Modbus
B. Power supply
C. + 8 to + 30 Vdc (max. rating)
D. SCADAPack32

Table C-22: Parameter Values (In Case of SCADAPack 32)

Parameter	Value
Baud Rate	9600
Floating Point Format Code	0
RTU Data Type	Floating Point
Input Register Base Number	30001

The Input Register Base Number needs to be added to the Input Register address of the Rosemount 3300 Level Transmitter. In this case, register 1302 needs to have 31303 entered as the address etc.

C.3.7 Kimray Inc. DACC 2000/3000

Table C-23 shows input types in Kimray Inc. IMI software and the corresponding value. The communication port must be configured to use “Tank Levels” protocol.

Table C-23: Kimray Inc. Input Types and Corresponding Values

Kimray Inc. Input Type	Rosemount 3300 Variable	Format
Tank Level1	PV	ddd.dd.alt. -dd.dd
Tank Level2	SV	ddd.dd.alt -dd.dd

00809-0100-4811
Rev. DD
2024

For more information: **Emerson.com/global**

©2024 Emerson. All rights reserved.

Emerson Terms and Conditions of Sale are available upon request. The Emerson logo is a trademark and service mark of Emerson Electric Co. Rosemount is a mark of one of the Emerson family of companies. All other marks are the property of their respective owners.

ROSEMOUNT™

EMERSON™