Reference Manual
00809-0100-4686, Rev KA
December 2017

Rosemount™ Integral Orifice Flow Meter Series



EMERSON

Contents

Section 1: Introduction

1.1 Using this manual 1
1.2 Returning the product 1
1.3 Considerations 2
1.3.1 Functional 2

Section 2: Installation

2.1 Safety messages 3
2.2 Receiving and inspection 3
2.3 Installation 4
2.3.1 Handling 4
2.3.2 Straight run requirements 4
2.3.3 Bolting a transmitter to the Rosemount 1195 5
2.3.4 Direct mount orientation 7
2.3.5 Remote mount orientation 9
2.3.6 Temperature sensors 11

Section 3: Commissioning

3.1 Safety messages 13
3.2 Direct mount applications 14
3.2.1 Liquid service 14
3.2.2 Gas service 15
3.2.3 Steam service 16
3.3 Remote mount applications 17
3.3.1 Liquid service 17
3.3.2 Gas service 18
3.3.3 Steam service 19

Section 4: Operation and Maintenance

4.1 Safety Messages 21
4.2 Troubleshooting 22
4.3 RTD Maintenance 23
4.3.1 Replacing an RTD 24

Appendix A: Specifications and Reference Data

A.1 Product Certifications 27
A.2 Ordering Information, Specifications, and Drawings 27

Rosemount Integral Orifice Flow Meter Series

NOTICE

Read this manual before working with the product. For personal and system safety, and for optimum product performance, make sure you thoroughly understand the contents before installing, using, or maintaining this product.

For technical assistance, contacts are listed below:

Customer Central

Technical support, quoting, and order-related questions.

United States - 1-800-999-9307 (7:00 am to 7:00 pm CST)

Asia Pacific- 65 777 8211

Europe/Middle East/Africa - 49 (8153) 9390

North American Response Center

Equipment service needs.1-800-654-7768 (24 hours—includes Canada)

Outside of these areas, contact your local Emerson™ representative.

⚠ CAUTION

The products described in this document are NOT designed for nuclear-qualified applications. Using non-nuclear qualified products in applications that require nuclear-qualified hardware or products may cause inaccurate readings.

For information on Rosemount nuclear-qualified products, contact your local Emerson Sales Representative.

This device is intended for use in temperature monitoring applications and should not be used in control and safety applications.

Section 1 Introduction

1.1 Using this manual

The sections in this manual provide information on installing, operating, and maintaining the Rosemount Integral Orifice Flow Meter Series.

The sections in this manual are organized as follows:

Section 2: Installation contains mechanical and electrical installation instructions.

Section 3: Commissioning contains techniques for properly commissioning the device.

Section 4: Operation and Maintenance contains operation and maintenance techniques.

Appendix A: Specifications and Reference Data supplies procedure on how to get the specifications, ordering information, and product certification.

1.2 Returning the product

To expedite the return process, call the Rosemount National Response Center toll-free at 800-654-7768. This center, available 24 hours a day, will assist you with any needed information or materials.

The center will ask for the following information:

- Product model
- Serial numbers
- The last process material to which the product was exposed

The center will provide

- A Return Material Authorization (RMA) number
- Instructions and procedures that are necessary to return goods that were exposed to hazardous substances

Note
If a hazardous substance is identified, a Material Safety Data Sheet (MSDS), required by law to be available to people exposed to specific hazardous substances, must be included with the returned materials.

1.3 Considerations

1.3.1 Functional

The Rosemount 1195 produces the most accurate and repeatable measurement when it is used in single-phase flow or steam flow above the saturation temperature. Location of the Rosemount 1195 in pulsating flow will cause a noisy signal. Vibration can also distort the output signal and compromise the structural limits of the flow meter.

Mount the Rosemount 1195 in a secure run of pipe as far as possible from pulsation sources such as check valves, reciprocating compressors or pumps, and control valves.

Install the Rosemount 1195 in the correct location within the piping branch to prevent measurement inaccuracies caused by flow disturbances.

Process temperature limits for direct mount applications is from –40 to 450 °F (–40 to 232°C). Process temperature limits for remote mount applications is –112 to 554°F (–80 to 290°C). Contact DP Flow specialists on availability of special all welded designs for applications with process temperatures as low as –320 °F (–195 °C) or as high as 850 °F (454 °C).

Vibration effect for Rosemount 1195, 3051SFP, 3051CFP, 2051CFP

Less than ±0.1percent of URL when tested per the requirements of IEC60068-2-6 (10 to 1000 Hz test frequency range, 0.075 mm displacement peak amplitude, 10 m/s2 acceleration amplitude).

Section 2 Installation

Safety messages . . . . . page 3
Receiving and inspection . . . . . page 3
Installation . . . . . page 4

2.1 Safety messages

Instructions and procedures in this section may require special precautions to ensure the safety of the personnel performing the operations. Refer to the following safety messages before performing any operation in this section.

⚠WARNING

Failure to follow these installation guidelines could result in death or serious injury.

Make sure only qualified personnel perform the installation.

Explosions could result in death or serious injury:

- Do not remove the transmitter cover in explosive atmospheres when the circuit is live.
- Before connecting a Field Communicator in an explosive atmosphere, make sure the instruments in the loop are installed in accordance with intrinsically safe or non-incendive field wiring practices.
- Verify that the operating atmosphere of the transmitter is consistent with the appropriate hazardous locations certifications.
- Both transmitter covers must be fully engaged to meet explosion-proof requirements.

Electrical shock can result in death or serious injury.

- Avoid contact with the leads and the terminals.

The product may be hot while in service, potentially causing burns. Handle with care.

2.2 Receiving and inspection

Flow meters are available in different models and with different options, so it is important to inspect and verify that the appropriate model was delivered before installation.

Upon receipt of the shipment, check the packing list against the material received and the purchase order. All items are tagged with a model number, serial number, and customer tag number. Report any damage to the carrier.

2.3 Installation

2.3.1 Handling

The product tag is not designed to withstand the weight of the flow meter- do not lift the product by the tag. Do not use any part of the Rosemount 1195 Flow Meter as a step or hand support. Product is not designed to withstand the weight of individuals.

2.3.2 Straight run requirements(1)

Figure 2-1. Reducer

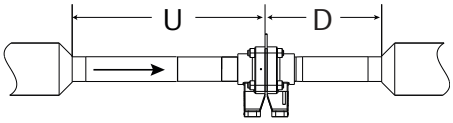

(2d to d over a length of 1.5d to 3d)

Figure 2-2. Single 90° Bend Flow from One Branch

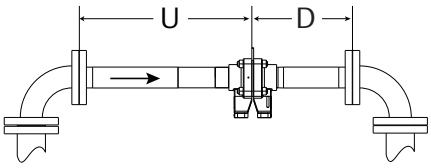

Figure 2-3. Two or More 90° Bends in Same Planes

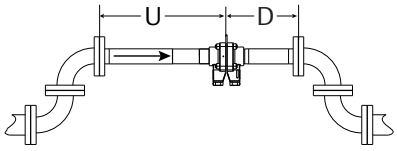

Figure 2-4. Two or More 90° Bends in Different Planes

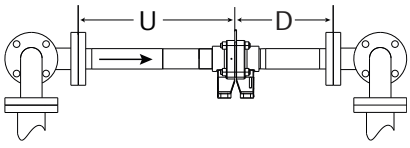

Figure 2-5. Expander

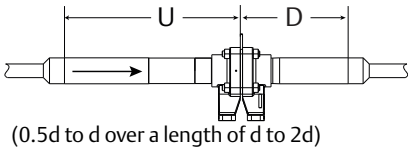

(0.5d to d over a length of d to 2d)

1, *For dimensions, see Table 1 on page 5.*

Figure 2-6. Ball/Gate Valve Fully Open

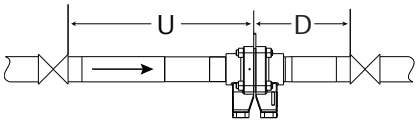

Table 1. Straight Run Requirements (in Pipe Diameters)

β(1)	Upstream (U)						Downstream (D)
	Figure 2-1	Figure 2-2	Figure 2-3	Figure 2-4	Figure 2-5	Figure 2-6	Figures 3–8(2)
0.20	20	24	25	30	22	22	10
0.40		25	27	31			
0.50		25	28	33	23	23	
0.60		27	31	37	25	25	
0.70	23	32	35	42	28	28	
0.75	25	35	38	45	30	30	

1. Interpolation of intermediate β values can be used.
2. All straight lengths are expressed as multiples of the pipe inside diameter (d) and shall be measured from the upstream face of orifice plate.

2.3.3 Bolting a transmitter to the Rosemount 1195

If the Rosemount 1195 is ordered separately from the Rosemount transmitter and will be used in a direct mount configuration, it will need to be assembled to the transmitter.

Follow the directions below to assemble the Rosemount 1195 to a transmitter with manifold:

Note
Units shipped from the factory direct mounted are pressure tested and characterized with the primary attached. Factory assembly is recommended for best performance.

Bolt to a 3- or 5-valve manifold

1. Use studs and nuts supplied with the Rosemount1195 to connect to the transmitter sensor and manifold.
2. Always use a 3- or 5-valve manifold when direct mounting a transmitter to the Rosemount 1195.
3. Observe the side of the orifice plate marked “Inlet.” This side should align to the High Pressure side of the DP transmitter.
4. Torque the bolts to 32 lb-ft using a cross pattern.

Note
Protect the transmitter sensing diaphragms and do not remove the O-rings in transmitter sensor module.

5. Carefully assemble the Rosemount 1195 body to the manifold and pressure transmitter sensor making sure the “H” and “L” on transmitter and primary match.
6. Preload to 16 lb-ft then final torque at 32 lb-ft using a cross pattern.

Figure 2-7. Rosemount 1195 Body(1)

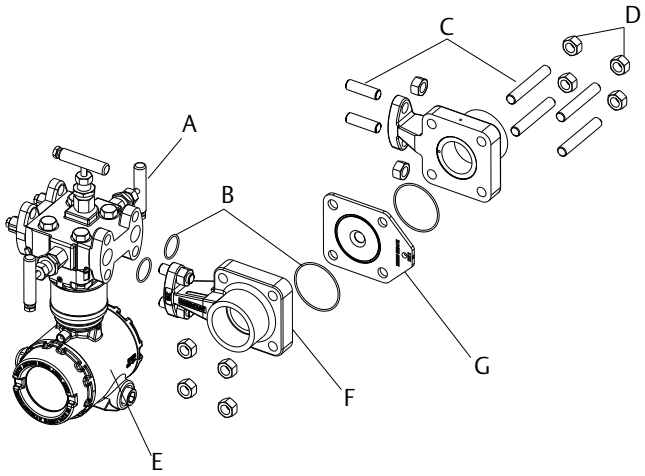

A. Manifold
B. Gaskets
C. Studs
D. Nuts
E. Transmitter
F. Rosemount 1195 body
G. Rosemount 1195 orifice plate

1, *Transmitter and housing are shown for clarity purposes - only supplied if ordered.*

2.3.4 Direct mount orientation

A direct mounted Rosemount 1195 may be shipped with the transmitter already bolted directly to the sensor.

Note
Process temperature limits for direct mount applications is from –40 to 450°F (–40 to 232 °C). Refer to "Remote mount orientation" on page 9 if the process could potentially exceed this temperature range.

Gas in horizontal pipes

Rosemount 1195 should be mounted above the pipe to ensure that condensate does not collect on the transmitter sensing diaphragms. Orient the unit within the recommended zone as shown in Figure 2-8.

Figure 2-8. Direct Mount Gas in Horizontal Pipes

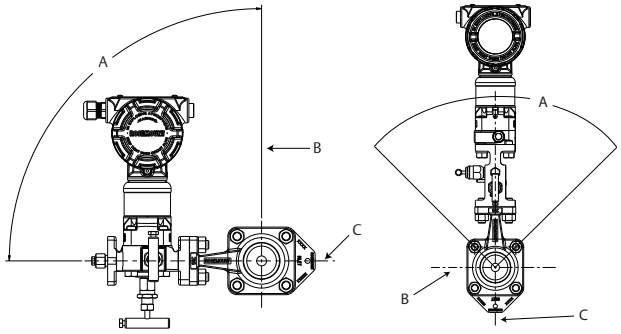

A. 90° recommended zone
B. Vertical plane
C. Horizontal plane

Liquid or steam in horizontal pipes

Rosemount 1195 should be mounted below the pipe to ensure that gases do not collect on the transmitter sensing diaphragms. Orient the unit within the recommended zone as shown in Figure 2-9.

Figure 2-9. Direct Mount Liquid or Steam in Horizontal Pipes

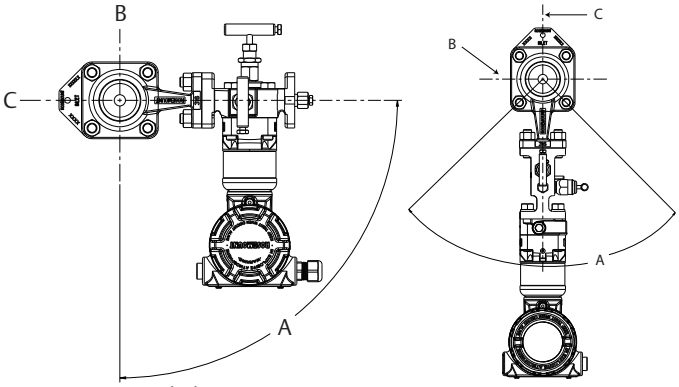

A. 90° recommended zone
B. Vertical plane
C. Horizontal plane

Liquid in vertical pipes

Note
Rosemount 1195 should not be used in vertical liquid or steam applications if the fluid is flowing down. Vertical steam should be remote mounted.

Figure 2-10. Direct Mount Liquid in Vertical Pipe

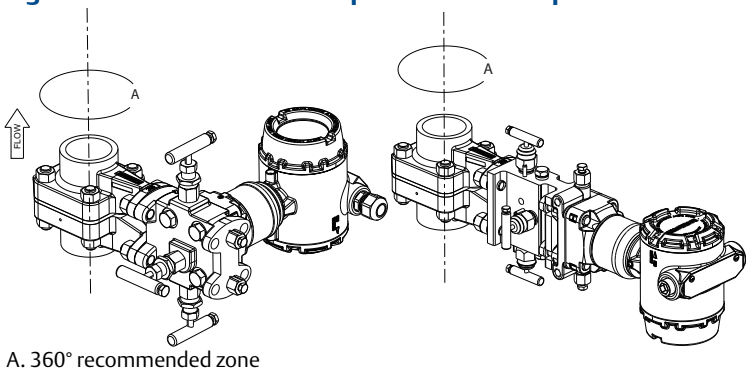

A. 360° recommended zone

Gas in vertical pipes

Note
Due to drain vent orientation, a direct mount Rosemount1195 should not be used in vertical gas applications if the fluid is flowing up. Consider remote mounting the pressure transmitter to facilitate condensate draining.

Figure 2-11. Direct Mount Gas in Vertical Pipes

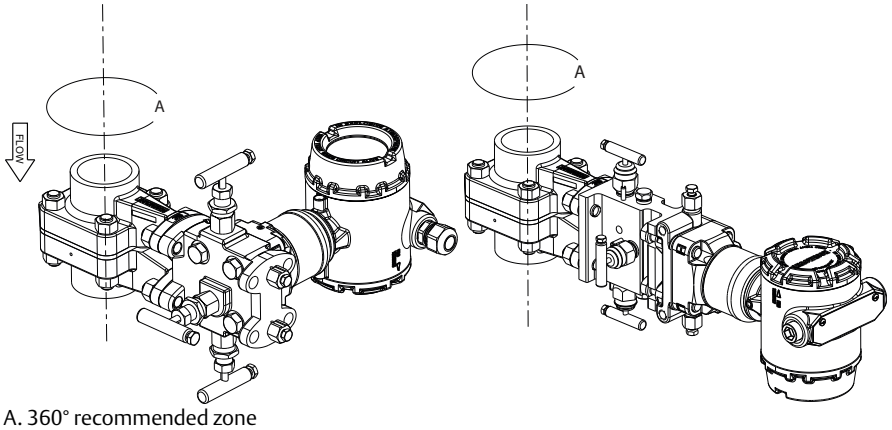

A. 360° recommended zone

2.3.5 Remote mount orientation

Gas in vertical or horizontal pipes

Figure 2-12. Remote Mount Gas in Vertical or Horizontal Pipes

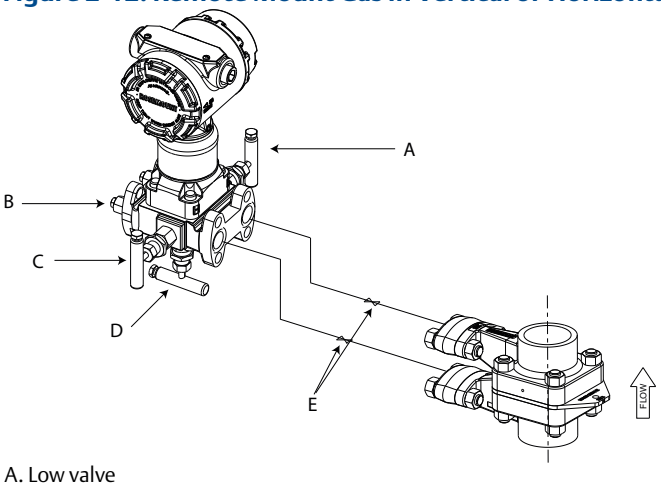

A. Low valve
B. Vent
C. High valve
D. Equalizer valve
E. Block valves

Liquid or steam in vertical or horizontal pipes

Note
Rosemount1195 should not be used in vertical liquid or steam applications if the fluid is flowing down.

Figure 2-13. Remote Mount Liquid or steam in Vertical or Horizontal Pipes

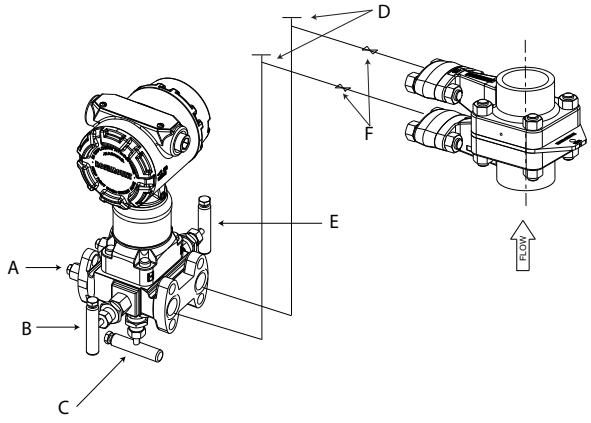

A. Vent
B. High valve
C. Equalizer valve
D. Vent valves
E. Low valve
F. Block valves

Remote mount adapter installation

Rosemount 1195 is available with 1/2–14-in. NPT connections (option code G2). The 1/2-in. connections can be rotated to attain connection centers of 2-, 2 1/8-, or 2 1/4-in. (51, 54, or 57 mm). See Figure 2-14 for detail. Use a lubricant or sealant when making the process connections.

Ensure all four flange studs are installed and tightened prior to applying pressure to prevent process leakage.

Figure 2-14. Adapter for Remote Mounting

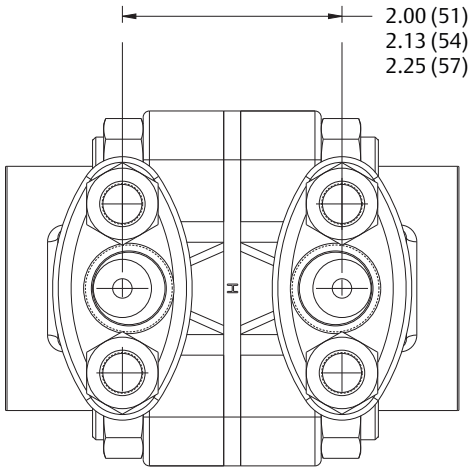

Note
Do not attempt to loosen or remove the nuts or studs while the Rosemount 1195 is in service.

Perform the following to install flange adapters to the instrument connection of the Rosemount 1195 (see Figure 2-15 on page 11).

1. Place O-ring in the groove on the instrument connection face.
2. Position flange adapters on top of the instrument connection with the machined surface in contact with the O-ring.
3. Insert studs through the Rosemount 1195 instrument connection and flange adapters.
4. Thread nuts onto studs. Tighten nuts to 32 ft-lbs.

O-rings must be replaced each time the Rosemount 1195 is disassembled for installation or maintenance.

Figure 2-15. Rosemount 1195 Remote Mount Flange Adapter Installation

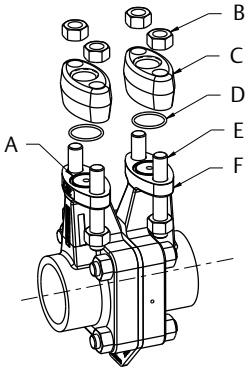

A. O-ring groove
B. Nut
C. Flange adapter
D. O-ring
E. Stud
F. Rosemount 1195 instrument connection

2.3.6 Temperature sensors

No cabling is provided on Rosemount 1195 and 3051SFP models ordered with temperature sensors.

Section 3 Commissioning

Safety messages . . . . . page 13
Direct mount applications . . . . . page 14
Remote mount applications . . . . . page 17

3.1 Safety messages

Instructions and procedures in this section may require special precautions to ensure the safety of the personnel performing the operations. Please refer to the following safety messages before performing any operation in this section.

⚠WARNING

Explosions could result in death or serious injury:

- Do not remove the transmitter cover in explosive atmospheres when the circuit is live.
- Before connecting a Field Communicator in an explosive atmosphere, make sure the instruments in the loop are installed in accordance with intrinsically safe or non-incendive field wiring practices.
- Verify that the operating atmosphere of the transmitter is consistent with the appropriate hazardous locations certifications.
- Both transmitter covers must be fully engaged to meet explosion-proof requirements.

Failure to follow these installation guidelines could result in death or serious injury:

- Make sure only qualified personnel perform the installation.
- If the line is pressurized, serious injury or death could occur by opening valves.

3.2 Direct mount applications

3.2.1 Liquid service

1. Pressurize line.
2. Open the equalizer valve.
3. Open the high and low side valves.
4. Bleed drain/vent valves until no gas is apparent in the liquid.
5. Close the vent/drain valves.
6. Close the low side valve.
7. Check the transmitter zero according to the transmitter product manual so that the output on the test meter reads zero percent of span.
8. Close the equalizer valve.
9. Open the low side valve. The system is now operational.

Figure 3-1. Direct Mount Liquid Service

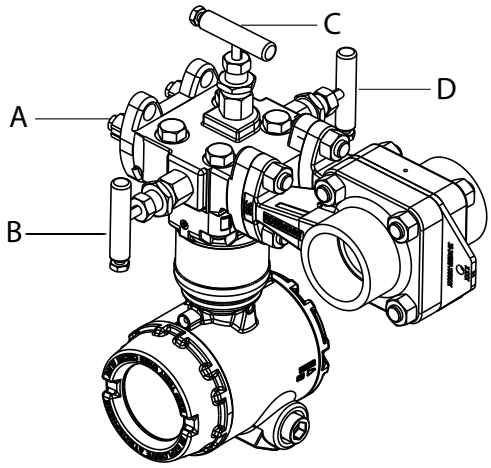

A. Vent
B. Low valve
C. Equalizer valve
D. High valve

3.2.2 Gas service

1. Pressurize line.
2. Open the equalizer valve.
3. Open the high and low side valves.
4. Open drain/vent valves to ensure no liquid is present.
5. Close the vent/drain valves.
6. Close the low side valve.
7. Check the transmitter zero according to the transmitter product manual so that the output on the test meter reads zero percent of span.
8. Close the equalizer valve.
9. Open the low side valve. The system is now operational.

Figure 3-2. Direct Mount Gas Service

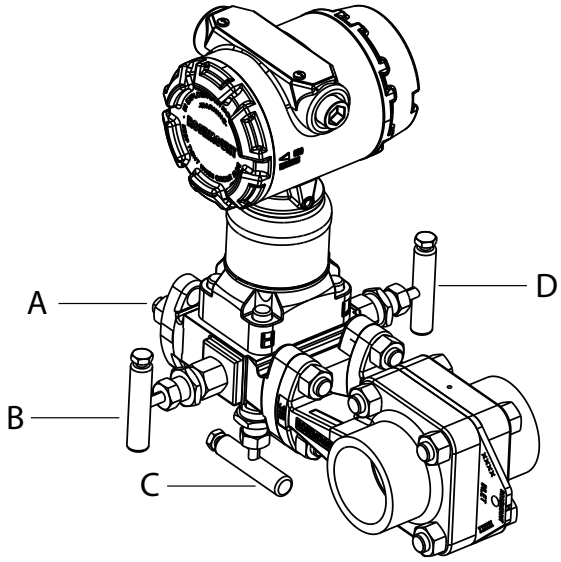

A. Vent
B. High valve
C. Equalizer
D. Equalizer valve

3.2.3 Steam service

1. Remove pressure from line.
2. Open equalizer, high, and low side valves.
3. Fill manifold and transmitter with water via drain vents.
4. Close low side valve.
5. Pressurize line.
6. Gently tap electronics body, manifold head, and Rosemount 1195 body with a small wrench to dislodge any entrapped air.
7. Zero electronics.
8. Close equalizer valve.
9. Open the low side valve. The system is now operational.

Figure 3-3. Direct Mount Steam Service

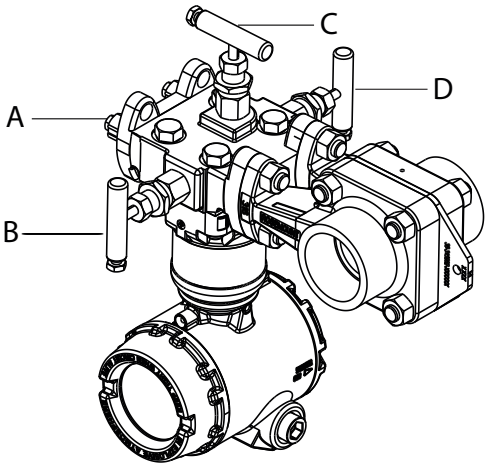

A. Vent
B. Low valve
C. Equalizer valve
D. High valve

3.3 Remote mount applications

3.3.1 Liquid service

1. Pressurize line.
2. Open equalizer valve on transmitter manifold. Close equalizer valve at Rosemount 1195, if one is used.
3. Open high and low side transmitter manifold valves and high and low block valves at Rosemount 1195.
4. Bleed drain/vent valves on transmitter manifold until no air is present.
5. Close drain vent valves, then bleed vent valves at the Rosemount 1195 block valves until no air is present.
6. Close vent valves at Rosemount 1195 block valves.
7. Close equalizer valve at transmitter manifold.
8. Close low and high side block valves at Rosemount 1195.
9. Open vent valves at Rosemount 1195 block valves.
10. Check transmitter zero according to transmitter manual.
11. Close vent valves at Rosemount 1195 block valves.
12. Open high and low side block valves at Rosemount 1195.

Figure 3-4. Remote Liquid Service

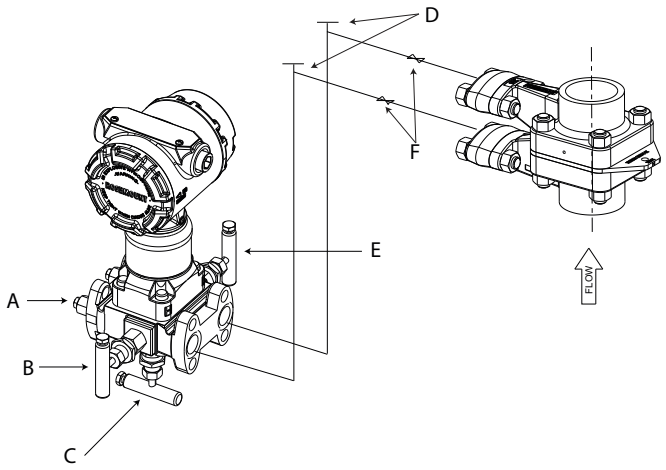

A. Vent
B. High valve
C. Equalizer valve
D. Vent valves
E. Low valve
F. Block valves

3.3.2 Gas service

1. Pressurize line.
2. Open equalizer valve on transmitter manifold.
3. Open high and low side transmitter manifold valves.
4. Open drain/vent valves on transmitter manifold to ensure no liquids are present.
5. Close drain/vent valves.
6. Close low side transmitter manifold valve.
7. Check transmitter zero according to transmitter manual.
8. Close equalizer on transmitter manifold.
9. Open low side valve on transmitter manifold. The system is now operational.

Figure 3-5. Remote Gas Service

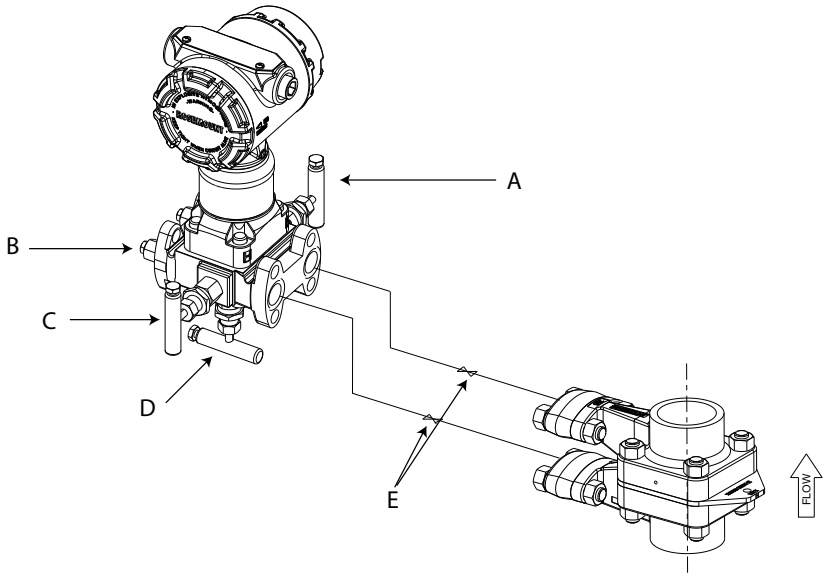

A. Low valve
B. Vent
C. High valve
D. Equalizer valve
E. Block valves

3.3.3 Steam service

1. Remove pressure from line or close block valves at Rosemount 1195.
2. Open equalizer valves, high and low side valves on the transmitter manifold. Close equalize valve at Rosemount 1195, if one is used.
3. Open vent valves at Rosemount 1195 block valves.
4. Fill transmitter manifold and instrument lines with water via low side vent at Rosemount 1195 block valves.
5. Open and close vent valves at transmitter to bleed out trapped air.
6. Close the equalizer valve at transmitter manifold.
7. Complete filling the low side sensing line.
8. Gently tap electronics body, transmitter manifold, instrument lines, and Rosemount 1195 with a small wrench to dislodge any trapped air.
9. Check transmitter zero according to transmitter manual.
10. Close vent valves at Rosemount 1195 block valves.If block valves at Rosemount 1195 had been closed they should now be opened. System is now operational for steam flow measurement.

Figure 3-6. Remote Steam Service

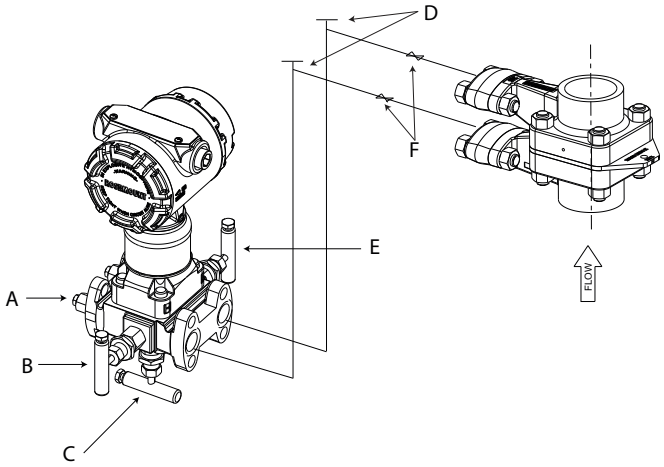

A. Vent
B. High valve
C. Equalizer valve
D. Vent valves
E. Low valve
F. Block valves

Section 4 Operation and Maintenance

Safety Messages . . . . . page 21
Troubleshooting . . . . . page 22
RTD Maintenance . . . . . page 23

4.1 Safety Messages

Procedures and instructions in this section may require special precautions to ensure the safety of the personnel performing the operations. Information that raises potential safety issues is indicated by a warning symbol (⚠). Refer to the following safety messages before performing an operation preceded by this symbol.

⚠WARNING

Explosions can result in death or serious injury:

- Do not remove the instrument cover in explosive environments when the circuit is live.
- Both transmitter covers must be fully engaged to meet explosion-proof requirements.
- Before connecting a communicator in an explosive atmosphere, make sure the instruments in the loop are installed in accordance with intrinsically safe or nonincendive field wiring practices.

Electrical shock can result in death or serious injury.

Avoid contact with the leads and the terminals.

4.2 Troubleshooting

If a malfunction is suspected despite the absence of diagnostic messages on the communicator display, follow the procedures described below to verify that the flow meter hardware and process connections are in good working order. Always approach the most likely and easiest-to-check conditions first.

Table 4-1. Troubleshooting

Symptom	Possible cause	Corrective action
Questionable accuracy or erroneous flow signal	Improper installation	• Is the flow arrow pointed in the direction of the flow? • Verify that the cross reservoirs are perfectly level with one another. • Is there sufficient straight run upstream and downstream of the flow meter?
	System leaks	Check for leaks in instrument piping. Repair and seal all leaks.
	Contamination/plugging	Remove the flow meter and check for contamination.
	Closed valve	Verify that both HI and LO manifold valves are open. Verify that vent, equalizer, and line valves are properly positioned per the “start up procedure.”
	Connections (remote mount only)	Verify that the high side of the electronics is connected to the high side of the flow meter. Check the same for the low side.
	Entrapped air (liquid and steam applications)	Are there uneven water legs caused by air entrapment in the instrument connections? If so, bleed air.
	Operating conditions	Are the operating conditions in compliance with those given at the time the flow meter was purchased? Check the flow calculation and the fluid parameters for accuracy. Double-check pipe inside diameter for proper sizing.
Spiking flow signal	Two-phase flow	The flow meter is a head measurement device and will not accurately measure a two-phase flow.
Spiking flow signal (stream service)	Improper insulation (vertical pipes only) Excessive vibration	Added insulation may be required to ensure that a phase change occurs at the cross reservoirs. Check the impulse piping for vibration.
Milliamp reading is zero		• Check if power polarity is reversed • Verify voltage across terminals (should be 10–55 Vdc) • Check for bad diode in terminal block • Replace electronics terminal block
Electronics not in communication		• Check power supply voltage at electronics (10.5 Vdc minimum) • Check load resistance (250 ohms minimum) • Check if unit is addressed properly • Replace electronics board
Milliamp reading is low or high		• Check pressure variable reading for saturation • Check if output is in alarm condition • Perform 4–20 mA output trim • Replace electronics board
No response to changes in applied flow		• Check test equipment • Check impulse piping for blockage • Check for disabled span adjustment • Check electronics security switch • Verify calibration settings (4 and 20 mA points) • Contact factory for replacement
Low reading/high reading		• Check impulse piping for blockage • Check test equipment • Perform full sensor trim (if software revision is 35 or higher) • Contact factory for replacement

Table 4-1. Troubleshooting

Symptom	Possible cause	Corrective action
Erratic reading for pressure variable		• Check impulse piping for blockage • Check damping • Check for EMF interference • Contact factory for replacement

Check flow direction

Check that the side of the orifice plate marked “Inlet” is facing upstream. If the DP transmitter is remote mounted from the Rosemount 1195, be sure that the impulse tubing is connected correctly from the Rosemount 1195 to the DP transmitter (high to high and low to low).

Check orientation

Improper orientation can result in inaccurate measurements.

Check zero

The transmitter may read off in the high or low direction if not zeroed properly at start-up/commissioning. Refer to the appropriate transmitter reference manual for additional information.

Check valves

The correct valve setting for flow measurement are: equalizer valve fully closed, high and low side valves fully open.

Check configuration/scaling

Is the 20 mA DP URL of the Rosemount 1195 set properly? This may involve sizing the Rosemount 1195 in the Toolkit Software program to confirm.

Confirm the DCS or PLC and transmitter on Rosemount 1195 are scaled consistently.

Is the square root being taken in the DCS or transmitter attached to the Rosemount 1195? The square root should not be taken in both places.

Check Rosemount 3051SMV configuration

If a Rosemount 3051SMV Transmitter is being used, its enhanced functionality should be taken into account during configuration and troubleshooting. The square root should not be taken in the DCS if a Rosemount 3051SMV Transmitter is being used.

See the Rosemount 3051SMV Reference Manual for additional information.

4.3 RTD Maintenance

To test the 4-wire RTD (refer to Figure 4-1 on page 24):

1. Disconnect power from the electronics.
2. Remove the temperature terminal housing cover.
3. Disconnect the RTD lead wires from the terminal block.
4. Separate the wires so that the un-insulated ends are not touching anything.

5. Check that the resistance measured between the two red wires is the same as the resistance measured between the two white wires within +/- 0.1 ohms. Take note of the resistance value measured between the two white wires for use in step 6.
6. Measure the resistance between one red wire and one white wire. Subtract the resistance measured in step 5 from the resistance measured in this step. Refer to Table 4-2 on page 25 to determine if this resistance matches the temperature that the RTD is in contact with.
7. Check the resistance between any wire and the RTD head or sheath. An acceptable resistance is 200 K ohms or greater.
8. If any of the above measurements are not within the acceptable range as stated above, contact an Emerson representative for a replacement RTD.
9. To return the RTD to service, connect the lead wires as shown in Figure 4-1.
10. Replace the Temperature Terminal Housing cover.
11. Re-connect power to the electronics.

Figure 4-1. Temperature Terminal Housing

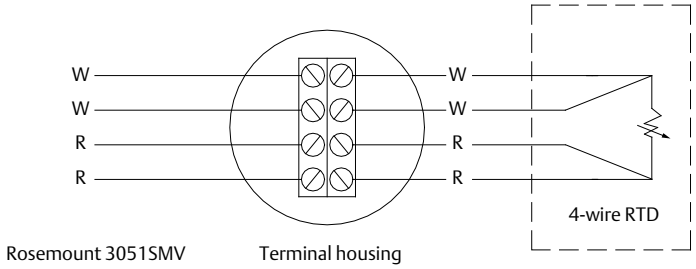

4.3.1 Replacing an RTD

If an RTD needs to be replaced, proceed as follows:

1. Disconnect power from the electronics.
2. Remove the temperature terminal housing cover.
3. Disconnect the RTD lead wires from the terminal block.

Note
Take care not to damage the RTD lead wires or insulation.

4. Use a $^{7}/_{16}$-in.deep socket and a pair of vise grip pliers to remove the RTD from the thermowell. It is necessary to feed the wires through the socket to avoid damaging the lead wires. Grip the socket with the vise grip pliers and turn the socket to remove the RTD.

Note
A special tool (part number 28-509004-01) may be purchased to perform this task.

5. Install the new RTD using the socket and pliers as in step 4 above.
6. Connect the RTD lead wires to the terminal block (see Figure 4-1).
7. Replace the temperature terminal housing cover.
8. Re-connect power to the electronics.

Table 4-2. Resistance vs. Temperature

IEC 751 Platinum 100, Alpha = 0.00385 RTD															
°F	Ohms	°F	Ohms	°F	Ohms	°F	Ohms	°C	Ohms	°C	Ohms	°C	Ohms	°C	Ohms
–330	18.04	60	106.07	450	187.65	840	263.80	–200	18.52	20	107.79	240	190.47	460	267.56
–320	20.44	70	108.23	460	189.67	850	265.68	–190	22.83	30	111.67	250	194.10	470	270.93
–310	22.83	80	110.38	470	191.68	860	267.56	–180	27.10	40	115.54	260	197.71	480	274.29
–300	25.20	90	112.53	480	193.70	870	269.44	–170	31.34	50	119.40	270	201.31	490	277.64
–290	27.57	100	114.68	490	195.71	880	271.31	–160	35.54	60	123.24	280	204.90	500	280.98
–280	29.93	110	116.83	500	197.71	890	273.17	–150	39.72	70	127.08	290	208.48	510	284.30
–270	32.27	120	118.97	510	199.71	900	275.04	–140	43.88	80	130.90	300	212.05	520	287.62
–260	34.61	130	121.11	520	201.71	910	276.90	–130	48.00	90	134.71	310	215.61	530	290.92
–250	36.94	140	123.24	530	203.71	920	278.75	–120	52.11	100	138.51	320	219.15	540	294.21
–240	39.26	150	125.37	540	205.70	930	280.61	–110	56.19	110	142.29	330	222.68	550	297.49
–230	41.57	160	127.50	550	207.69	940	282.46	–100	60.26	120	146.07	340	226.21	560	300.74
–220	43.88	170	129.62	560	209.67	950	284.30	–90	64.30	130	149.83	350	229.72	570	304.01
–210	46.17	180	131.74	570	211.66	960	286.14	–80	68.33	140	153.58	360	233.21	580	307.25
–200	48.46	190	133.86	580	213.63	970	287.98	–70	72.33	150	157.33	370	236.70	590	310.49
–190	50.74	200	135.97	590	215.61	980	289.82	–60	76.33	160	161.05	380	240.18	600	313.71
–180	53.02	210	138.08	600	217.58	990	291.65	–50	80.31	170	164.77	390	243.64	610	316.92
–170	55.29	220	140.19	610	219.55	1000	293.48	–40	84.27	180	168.48	400	247.09	620	320.12
–160	57.55	230	142.29	620	221.51	1010	295.30	–30	88.22	190	172.17	410	250.53	630	323.30
–150	59.81	240	144.39	630	223.47	1020	297.12	–20	92.16	200	175.86	420	253.96	640	326.48
–140	62.06	250	146.49	640	225.42	1030	298.94	–10	96.09	210	179.53	430	257.38	650	329.64
–130	64.30	260	148.58	650	227.38	1040	300.75	0	100.00	220	183.17	440	260.78	660	332.79
–120	66.54	270	150.67	660	229.33	1050	302.56	10	103.90	230	186.84	450	264.18		
–110	68.77	280	152.75	670	231.27	1060	304.37								
–100	71.00	290	154.83	680	233.21	1070	306.17								
–90	73.22	300	156.91	690	235.15	1080	307.97								
–80	75.44	310	158.98	700	237.09	1090	309.77								
–70	77.66	320	161.05	710	239.02	1100	311.56								
–60	79.86	330	163.12	720	240.95	1110	313.35								
–50	82.07	340	165.18	730	242.87	1120	315.14								
–40	84.27	350	167.24	740	244.79	1130	316.92								
–30	86.47	360	169.30	750	246.71	1140	318.70								
–20	88.66	370	171.35	760	248.62	1150	320.47								
–10	90.85	380	173.40	770	250.53	1160	322.24								
0	93.03	390	175.45	780	252.44	1170	324.01								
10	95.21	400	177.49	790	254.34	1180	325.77								
20	97.39	410	179.53	800	256.24	1190	327.53								
30	99.57	420	181.56	810	258.14	1200	329.29								
40	101.74	430	183.59	820	260.03	1210	331.04								
50	103.90	440	185.62	830	261.92	1220	332.79								

Note
To convert from °C to °F: (1.8 x [°C]) + 32 = °F

Example: (1.8 x 100) + 32 = 212 °F

To convert from °F to °C: 0.556 ([°F] – 32) = °C
Example: 0.556 (212 – 32) = 100 °C

Appendix A Specifications and Reference Data

Product Certifications . . . . . page 27
Ordering Information, Specifications, and Drawings . . . . . page 27

A.1 Product Certifications

To view current Rosemount 1195, 2051CFP, 3051CFP, and 3051SFP Product Certifications, follow these steps:

1. Go to Emerson.com/Rosemount/Rosemount-1195-Integral-Orifice-Primary-Element.
2. Scroll as needed to the green menu bar and click **Documents & Drawings**.
3. Click **Manuals & Guides**.
4. Select the appropriate Quick Start Guide.

A.2 Ordering Information, Specifications, and Drawings

To view current Rosemount 1195, 2051CFP, 3051CFP, and 3051SFP Ordering Information, Specifications, and Drawings, follow these steps:

1. Go to Emerson.com/Rosemount/Rosemount-1195-Integral-Orifice-Primary-Element.
2. Scroll as needed to the green menu bar and click **Documents & Drawings**.
3. For installation drawings, click **Drawings & Schematics** and select the appropriate document.
4. For ordering information, specifications, and dimensional drawings, click Data Sheets & Bulletins and select the appropriate Product Data Sheet.

Reference Manual
00809-0100-4686, Rev KA
December 2017

Global Headquarters
Emerson Automation Solutions
6021 Innovation Blvd.
Shakopee, MN 55379, USA
+1 800 999 9307 or +1 952 906 8888
+1 952 949 7001
RFQ.RMD-RCC@Emerson.com

North America Regional Office
Emerson Automation Solutions
8200 Market Blvd.
Chanhassen, MN 55317, USA
+1 800 999 9307 or +1 952 906 8888
+1 952 949 7001
RMT-NA.RCCRFQ@Emerson.com

Latin America Regional Office
Emerson Automation Solutions
1300 Concord Terrace, Suite 400
Sunrise, FL 33323, USA
+1 954 846 5030
+1 954 846 5121
RFQ.RMD-RCC@Emerson.com

Europe Regional Office
Emerson Automation Solutions Europe GmbH
Neuhofstrasse 19a P.O. Box 1046
CH 6340 Baar
Switzerland
+41 (0) 41 768 6111
+41 (0) 41 768 6300
RFQ.RMD-RCC@Emerson.com

Asia Pacific Regional Office
Emerson Automation Solutions
1 Pandan Crescent
Singapore 128461
+65 6777 8211
+65 6777 0947
Enquiries@AP.Emerson.com

Middle East and Africa Regional Office
Emerson Automation Solutions
Emerson FZE P.O. Box 17033
Jebel Ali Free Zone - South 2
Dubai, United Arab Emirates
+971 4 8118100
+971 4 8865465
RFQ.RMTMEA@Emerson.com

Linkedin.com/company/Emerson-Automation-Solutions

Twitter.com/Rosemount_News

Facebook.com/Rosemount

Youtube.com/user/RosemountMeasurement

Google.com/+RosemountMeasurement

Standard Terms and Conditions of Sale can be found on the Terms and Conditions of Sale page.
The Emerson logo is a trademark and service mark of Emerson Electric Co.
Paine and Paine logotype are trademarks of Emerson.
All other marks are the property of their respective owners.
© 2017 Emerson. All rights reserved.

PAINE

EMERSON