Quick Start Guide
MS-00825-0100-4965, Rev. AE
June 2026

Rosemount™ 965 Flame Detector



Product documents can be located by selecting the search tool magnifier icon at the top of **www.emerson.com** and then select the "Serial Number" lookup button in the pop-up menu.

For Additional Product Information:

Please scan the QR code on this document for your local language safety messages.
Escaneie o código QR acima para obter as mensagens de segurança no idioma local.
Bitte scannen Sie den QR-Code oben nach den Sicherheitshinweisen Ihrer Landessprache.
Veuillez scanner le code QR ci-dessus pour obtenir vos messages de sécurité en langue locale.
Lea el código QR anterior para ver sus mensajes de seguridad en el idioma local.
Eseguire la scansione del codice QR sopra indicato per i messaggi di sicurezza nella lingua locale.
Отсканируйте QR-код выше, чтобы получить сообщения о безопасности на местном языке.
请扫描上面的 QR 代码以了解您的本地语言安全消息。
上記の QR コードをスキャンして、地域の言語の安全性に関するメッセージを確認してください。
현지 언어 안전 메시지를 보려 면 위의 QR 코드를 스캔하세요

ROSEMOUNT™

EMERSON

1 Safety information

WARNING

Physical access

Unauthorized personnel may potentially cause significant damage to and/or misconfiguration of end users' equipment. This could be intentional or unintentional and needs to be protected against.

Physical security is an important part of any security program and fundamental in protecting your system. Restrict physical access by unauthorized personnel to protect end users' assets. This is true for all systems used within the facility.

CAUTION

Improper wiring may damage the detector.

NOTICE

To comply with Electromagnetic Control (EMC) Directive 2014/30/EU and protect against interference caused by radio frequency interference (RFI) and electromagnetic interference (EMI), shield the cable to the detector and ground the detector.

NOTICE

Disconnect external devices, such as fire alarms and automatic extinguishing systems, before performing maintenance.

Do not expose the detector to radiation of any kind unless required for testing purposes.

Do not open the electronic compartment. Keep this part closed at all times. It can only be opened at the factory. Opening the electronic component side invalidates the warranty.

Only access the wiring compartment to wire or remove the detector or access RS-485 terminals for maintenance.

2 Introduction

The Rosemount 965 detects hydrocarbon fires at up to 150 ft. (45 m) with unparalleled reliability.

The 965 is based on QuadSense™ triple-infrared (IR3) technology, ensuring high sensitivity and proven immunity to false alarms.

3 Installation

Ensure that installation guidelines align with the National Fire Protection Association (NFPA) 72E or any other local and international regulations and standards, as applicable to flame detectors and installation of Ex-approved products. To ensure optimal performance and efficient installation, consider the following guidelines.

3.1 Installation guidelines

3.1.1 Wiring

The wire gauge must be designed according to the distance from the detector to the controller and the number of detectors on the same power line.

NOTICE

To fully comply with Electromagnetic Control (EMC) directive and protect against interference caused by radio frequency interference (RFI) and electromagnetic interference (EMI), the cable to the detector must be shielded and the detector must be grounded. The shield should be grounded at the detector end.

An external bonding connection shall be used for all installations. Ensure the external bonding conductor is connected in accordance with applicable local and national electrical codes.

3.1.2 Environment

Dust, snow, or rain can reduce the detector's sensitivity and require more maintenance activities.

The presence of high intensity emission sources may affect sensitivity.

3.2 Preparation for use

The installation sequence may vary according to the physical structure of the site.

The following tools are required for installation:

Note

These are standard tools. Emerson does not supply them with the detector.

Table 3-1: Required tools

Tool	Function
Hex key 5 mm	Adjust the tilt mount
Phillips head screwdriver	Fasten the back cover security screw
Flat screwdriver 3 mm	For terminals
Flat screwdriver	Fasten the ground wire (aluminum model only)

3.3 Stainless steel tilt mount

Figure 3-1: Tilt mount

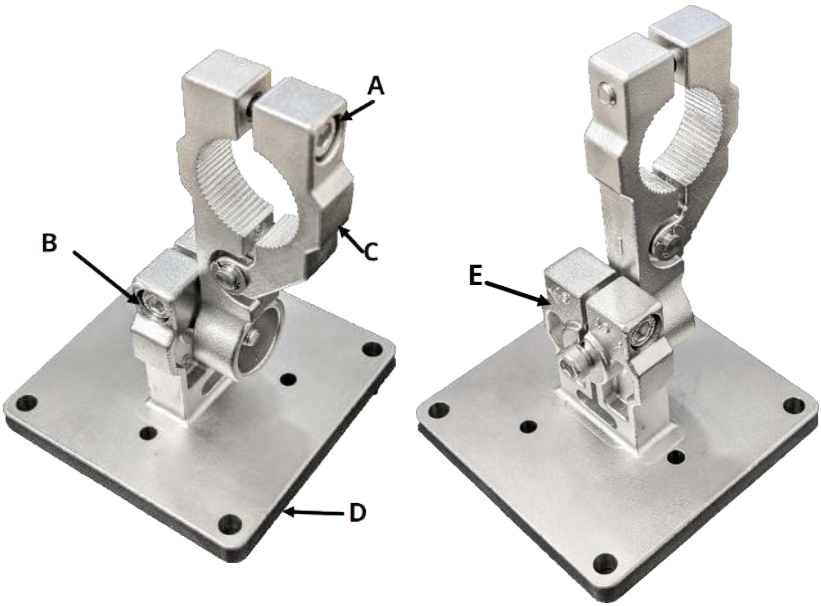

A. Clamp locking screw
B. Horizontal/vertical locking screw
C. Rotating clamp
D. Tilt holding plate
E. 45° mark

Figure 3-2: Tilt mount dimensions

Dimensions are in millimeters.

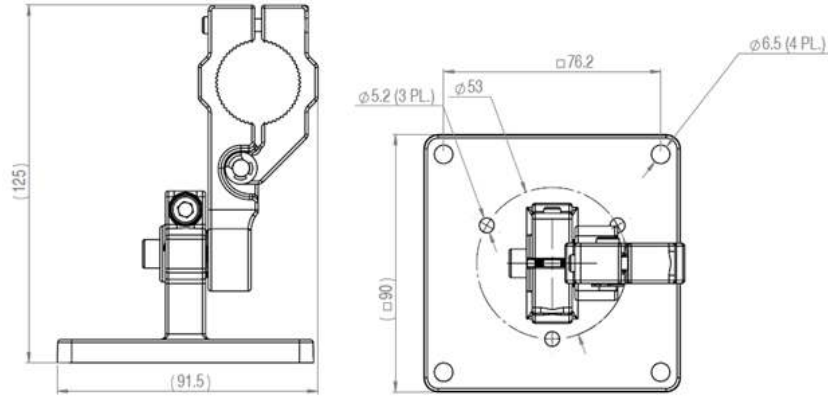

3.4 Engineered polymer tilt mount

Figure 3-3: Tilt mount



A. Clamp locking screw
B. Horizontal/vertical locking screw
C. Rotating clamp
D. Tilt holding plate
E. 45° mark

Figure 3-4: Tilt mount dimensions

Dimensions are in millimeters [inches].

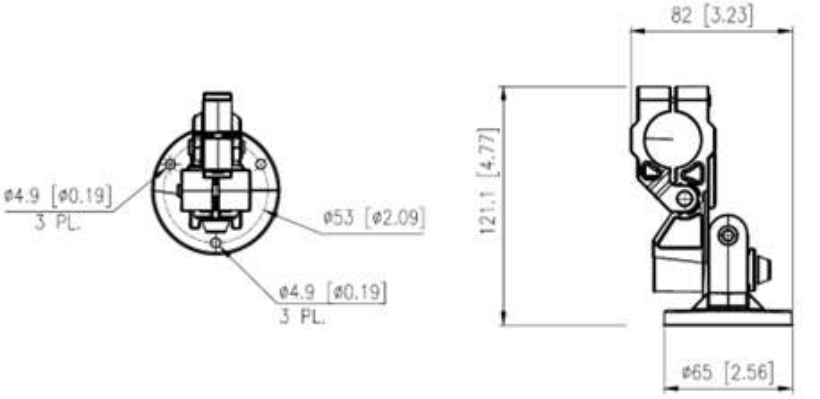

3.5 Install tilt mount

Procedure

1. Unpack the detector.
   Emerson provides a plastic protection plug with the detector. See Figure 3-5.

Figure 3-5: Detector with a plastic protection plug



Note

The tilt mount features a single X/Y rotation axis. Consider the desired position of the tilt mount holding plate prior to installation.

2. Use the 5 mm hex key to release the captive screw that locks the clamp.

Figure 3-6: Tilt mount installation diagram

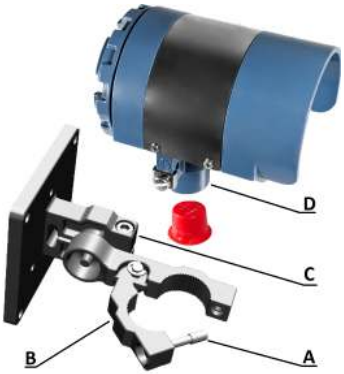

A. Clamp locking screw
B. Rotating clamp
C. Horizontal/vertical locking screw
D. Detector conduit

3. Place the detector conduit within the clamp.

Note

To change the detector field of view, release the horizontal/vertical locking screw.

4. Lock the clamp and tighten the clamp locking captive screw.
5. Point the detector toward the protected area and ensure the view of the area is unobstructed.
6. Secure the detector in that position by tightening the horizontal/vertical locking screw on the tilt mount.

Release the rotating clamp to minimize paint scratches on the detector conduit when moving the detector.

Figure 3-7: Detector with tilt mount installed



3.6 Wiring preparation

Procedure

1. Use a Phillips head screwdriver (see following image) to unfasten the locking screw (A) on the back cover.

Figure 3-8: Removing the back cover security screw and protective plug



A. Back cover security screw (aluminum model only)
B. Protective plug

2. Unscrew and remove the back cover to access the terminal compartment.

Figure 3-9: Accessing the terminal compartment by removing the back cover



3. Remove the protective plug to use the conduit.

3.7 Wire the terminals and ground cable

Procedure

1. Connect the terminals according to Table 3-2.

The terminal details also appear on the inside of the detector.

Figure 3-10: Terminals

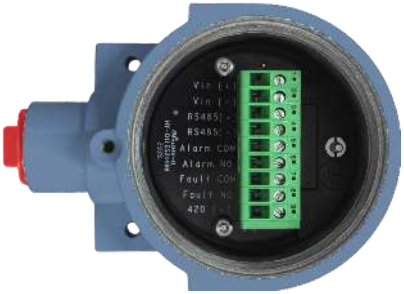

Table 3-2: Terminal box

Terminal	Function
T1	`Vin (+)`: 24 Vdc (+)
T2	`Vin (-)`: 24 Vdc (-)
T3	`RS485(+)`
T4	`RS485(-)`
T5	`Alarm COM`: Alarm relay - common
T6	`Alarm NO`: Alarm relay - normally open
T7	`Fault COM`: Fault relay - common (COM)
T8	`Fault NO`: Fault relay - normally open
T9	`420 (-)`:4-20 (-)

When the fault relay wiring option is set to Normally Open (NO), the relay contact is **closed** under Normal (energized) conditions and **open** during a Fault (de-energized) condition.

Use Figure 3-11 and Figure 3-12 for typical wiring configurations.

Figure 3-11: Typical wiring configuration for 4-wire controllers

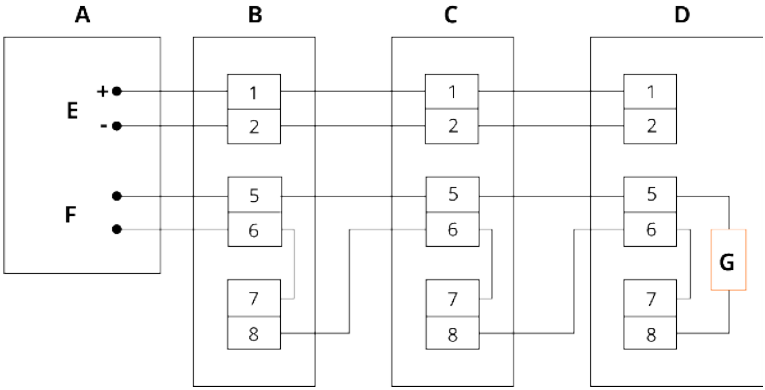

A. Controller
B. First detector
C. Second detector
D. Last detector
E. Power supply
F. Alarm loop - relay connection
G. End of line resistor (1.5 kΩ)

Figure 3-12: Source 3-wire

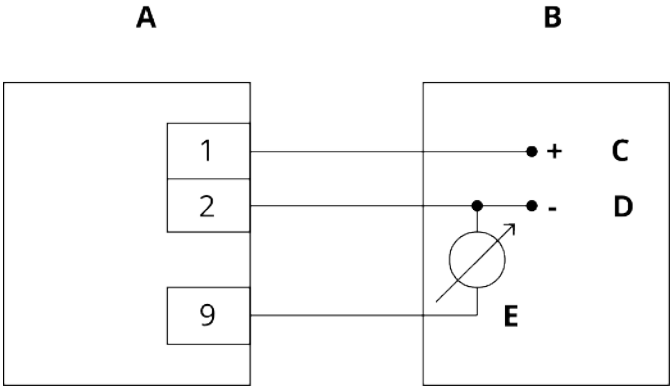

A. Detector
B. Controller
C. Input power: 18 to 32 Vdc
D. Return
E. 0–20 mA meter

2. Check that the wires are securely connected and press them neatly against the terminal to prevent interference when closing the back cover.
3. Close the terminal compartment by screwing the back cover on the housing.

4. Use the Phillips screwdriver to screw the back cover security screw to fix the back cover.

Figure 3-13: Security screw



A. Back cover security screw (aluminum model only)

5. Connect the ground cable.

Figure 3-14: Ground cable connection

Aluminum model only.



A. Ground cable connection point

3.8 Backshell assembly instructions



3.8.1 Pinout

Figure 3-15: Pinout diagram



Table 3-3: Pin configuration and signal description

Pin	Signal
1	VIN_PWR
2	GND_PWR (Ground power)
4	4–20 (-)
5	Fault Relay COM (common)
6	Fault Relay NC (normally closed)
7	Alarm Relay COM (common)
8	Alarm Relay NO (normally open)
9	RS-485 (-)
10	RS-485 (+)
12	Shield

3.8.2 Assemble backshell

Figure 3-16: Backshell assembly

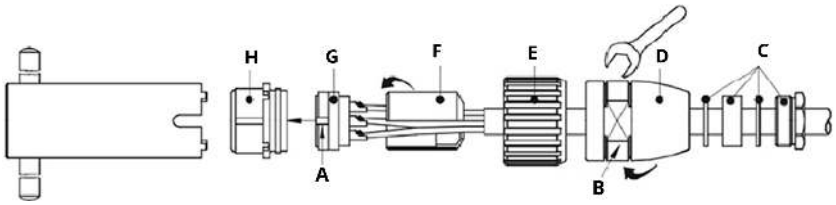

A. Coding groove
B. SW 20 mm
C. Cable screw connection
D. Adapter
E. Coupling nut
F. Distance shell
G. Contact insert
H. Insert ring

Prerequisites

This section lists the essential equipment needed for the assembly, including the mounting key – binder connector manufacturing part number: `08 1205 000 000`. Mounting key must be ordered separately.

Figure 3-17: Mounting key - binder connector



Procedure

1. Prepare cable.
   a. Push the cable screw connection, adapter, and coupling nut onto the cable.
   b. Strip the cable coating by 0.79 in. (20 mm).
   c. Trim foil, filler, and inner insulation as needed.
2. Prepare wires.
   a. Strip the single wires by 0.14 in. (3.5 mm).
   b. Twist the exposed wire strands.
   c. Tin the twisted wire ends to prepare for soldering.
3. Solder the single wires to the contacts in the contact insert.
4. Insert components.
   a. Insert the distance shell.

b. Guide the insert and distance shell into the insert ring.

c. Ensure that the desired coding groove of the insert is properly aligned with the coding bar.

5. Complete final assembly.

a. Screw the adapter as tightly as possible.

b. Screw the cable gland as tightly as possible.

Torque specifications

- Maximum 0.1 N-m for screw contacts with a mating diameter of 0.04 in. (1 mm)
- Maximum 0.2 N-m for screw contacts with a mating diameter of 0.08 in. (2 mm)

⚠ CAUTION

Ensure all components are securely fastened and that the coding grooves are correctly aligned before final tightening to prevent electrical faults and mechanical damage.

For any further assistance, please refer to the manufacturer's detailed technical documentation or contact support.

3.9 Specific conditions for use

1. Flameproof joints are not intended for repair.
2. Appropriate cable, glands, and conduit seals need to be suitable for a temperature of at least 90 °C.
3. Use only suitably rated and approved/certified M20 to ½-inch NPT adapter for a ½-inch NPT conduit connection.
4. Potential Electrostatic Charging Hazard.
5. Avoid Installation that could cause electrostatic build-up and only clean with a damp cloth.

3.10 Aiming the detector

Aim the detector towards the center of the detection zone and make sure you have a completely unobstructed view of the protected area.

Position the detector tilted down at a 45° angle to maximize coverage and prevent accumulation of dust and dirt.

4 Electrical specifications

Table 4-1: Electrical Rating

Operating voltage	24 Vdc nominal (12 to 32 Vdc)
Typical power consumption (24 Vdc)	25 mA, 0.6 Watts

Table 4-2: Outputs

Relays	Fault - normally closed (NC) Alarm - normally open (NO) SPST volt-free contacts rated 2 A at 30 Vdc
0–20 mA (stepped) default(1)	Fault: < 1.1 mA Built-in test (BIT) fault: 2 mA ± 3 mA Normal: 4 mA ± 0.3 mA Warning: 16 mA ± 0.3 mA Alarm: 20 mA ± 0.3 mA
HART® protocol	HART communication on the 0–20 mA analog current (FSK) used for maintenance, configuration changes, and asset management, available in mA source output wiring options
RS-485	RS-485 Modbus®-compatible communication link that can be used in computer controlled installations

(1) This output is configurable.

Quick Start Guide
MS-00825-0100-4965, Rev. AE
June 2026

For more information: Emerson.com

©2026 Emerson. All rights reserved.

Emerson Terms and Conditions of Sale are available upon request. The Emerson logo is a trademark and service mark of Emerson Electric Co. Rosemount is a mark of one of the Emerson family of business units. All other marks are the property of their respective owners.

ROSEMOUNT™

EMERSON