Reference Manual
00809-0100-4810, Rev EE
October 2025

Rosemount™ 405 Compact Orifice Flow Meter Series



ROSEMOUNT™

EMERSON™

NOTICE

Read this manual before working with the product. For personal and system safety and for optimum product performance, ensure that you thoroughly understand the contents before installing, using, or maintaining this product.

The United States has two toll-free assistance numbers and one international number.

Customer Central: 1-800-999-9307 (7:00 a.m. to 7:00 p.m. CST)

National Response Center: 1-800-654-7768 (24 hours a day), Equipment service needs

International: 1-(952) 906-8888

⚠ CAUTION

The products described in this document are NOT designed for nuclear-qualified applications. Using non-nuclear qualified products in applications that require nuclear-qualified hardware or products may cause inaccurate readings.

For information on Emerson nuclear-qualified products, contact your local Emerson Sales Representative.

Contents

Chapter 1 **Introduction** **5**
1.1 Transmitter information 5
1.2 Receiving and inspection 5
1.3 Returning the product 5
1.4 Considerations 6

Chapter 2 **Installation** **7**
2.1 Safety messages 7
2.2 Installation 7
2.3 Location and orientation 11
2.4 405 installation 16

Chapter 3 **Commissioning** **21**
3.1 Safety messages 21
3.2 Direct-mount applications 21
3.3 Remote-mount applications 24

Chapter 4 **Operation and Maintenance** **29**
4.1 Safety messages 29
4.2 Troubleshooting 29
4.3 Resistance Temperature Detector (RTD) maintenance 32

Appendix A **Reference Data** **35**
A.1 Ordering information 35
A.2 Specifications 65
A.3 Installation consideration 101
A.4 Dimensional drawings 104
A.5 Spare parts 108

Appendix B **Product certifications** **113**
B.1 Rosemount 3051S/3051/2051 113

1 Introduction

1.1 Transmitter information

If the 405 Primary Element was ordered assembled to a Rosemount 3051S Transmitter, then the new assembly is the Rosemount 3051SFC Compact Flow Meter. See the Rosemount 3051S Series Pressure Transmitter Reference Manual for information regarding transmitter installation, configuration, and operation.

If the 405 Primary Element was ordered assembled to a Rosemount 3051S MultiVariable™ Transmitter, then the new assembly is the Rosemount 3051SFC Compact Mass Flow Meter. See the Rosemount 3051S MultiVariable Transmitter Reference Manual for information regarding transmitter installation, configuration, and operation.

If the 405 Primary Element was ordered assembled to a Rosemount 3051 Transmitter, then the new assembly is the Rosemount 3051CFC Compact Flow Meter. See the Rosemount 3051 Pressure Transmitter Reference Manual for information regarding transmitter installation, configuration, and operation.

If the 405 Primary Element was ordered assembled to a Rosemount 2051 Transmitter, then the new assembly is the Rosemount 2051CFC Compact Flow Meter. See the Rosemount 2051 Pressure Transmitter Reference Manual for information regarding transmitter installation, configuration, and operation.

1.2 Receiving and inspection

Devices are available in different models and with different options. Before installation, it is important to inspect and verify that the appropriate model was delivered.

Upon receipt of the shipment, check the packing list against the material received and the purchase order. All items are tagged with a model number, serial number, and customer tag number. Report any damage to the carrier.

1.3 Returning the product

To expedite the return process, call the Rosemount National Response Center toll-free at 800-654-7768. This center, available 24 hours a day, will assist you with any needed information or materials.

The center will ask for:

- Product model
- Serial numbers
- The last process material to which the product was exposed

The center will provide:

- A Return Material Authorization (RMA) number
- Instructions and procedures that are necessary to return goods that were exposed to hazardous substances

Note
If a hazardous substance is identified, then a Material Safety Data Sheet (MSDS) must be included with the returned materials. The MSDS is required by law to be available to people exposed to specific hazardous substances.

1.4 Considerations

1.4.1 Functional

The Rosemount 405 produces the most accurate and repeatable measurement when it is used in single-phase flow or steam flow above the saturation temperature. Location of the 405 in pulsating flow will cause a noisy signal. Vibration can also distort the output signal and compromise the structural limits of the flow meter.

Mount the 405 in a secure run of pipe as far as possible from pulsation sources such as check valves, reciprocating compressors or pumps, and control valves.

Install the 405 in the correct location within the piping branch to prevent measurement inaccuracies caused by flow disturbances.

Maximum temperature for direct-mount applications is 450 °F (232 °C). Maximum temperature for remote-mount applications is 850 °F (454 °C).

Vibration limits

Qualified per IEC61298-3 (2008) for field with general application or pipeline with low vibration level (10 to 1,000 Hz test frequency range, 0.15 mm displacement peak amplitude, 20 m/s^2 acceleration amplitude). The weight and length of the transmitter assembly shall not exceed 9.8 lb. (4.45 kg) and 8.60 in. (218.44 mm).

2 Installation

2.1 Safety messages

Instructions and procedures in this section may require special precautions to ensure the safety of the personnel performing the operations. Refer to the following safety messages before performing any operation in this section.

⚠ WARNING

Explosions could result in death or serious injury.

Do not remove the transmitter cover in explosive atmospheres when the circuit is live.

Before connecting a HART® Communicator in an explosive atmosphere, make sure the instruments in the loop are installed in accordance with intrinsically safe or non-incendive field wiring practices.

Verify that the operating atmosphere of the transmitter is consistent with the appropriate hazardous locations certifications.

Both transmitter covers must be fully engaged to meet explosion-proof requirements.

Failure to follow these installation guidelines could result in death or serious injury.

Ensure only qualified personnel perform the installation.

The product may be hot while in service, potentially causing burns. Handle with care.

2.2 Installation

2.2.1 Flowchart

Figure 2-1 is an installation flowchart that provides guidance through the installation process. Following the figure, an installation checklist has been provided to verify that all critical steps have been taken in the installation process. The checklist numbers are indicated in the flowchart.

Figure 2-1: Commissioning Chart

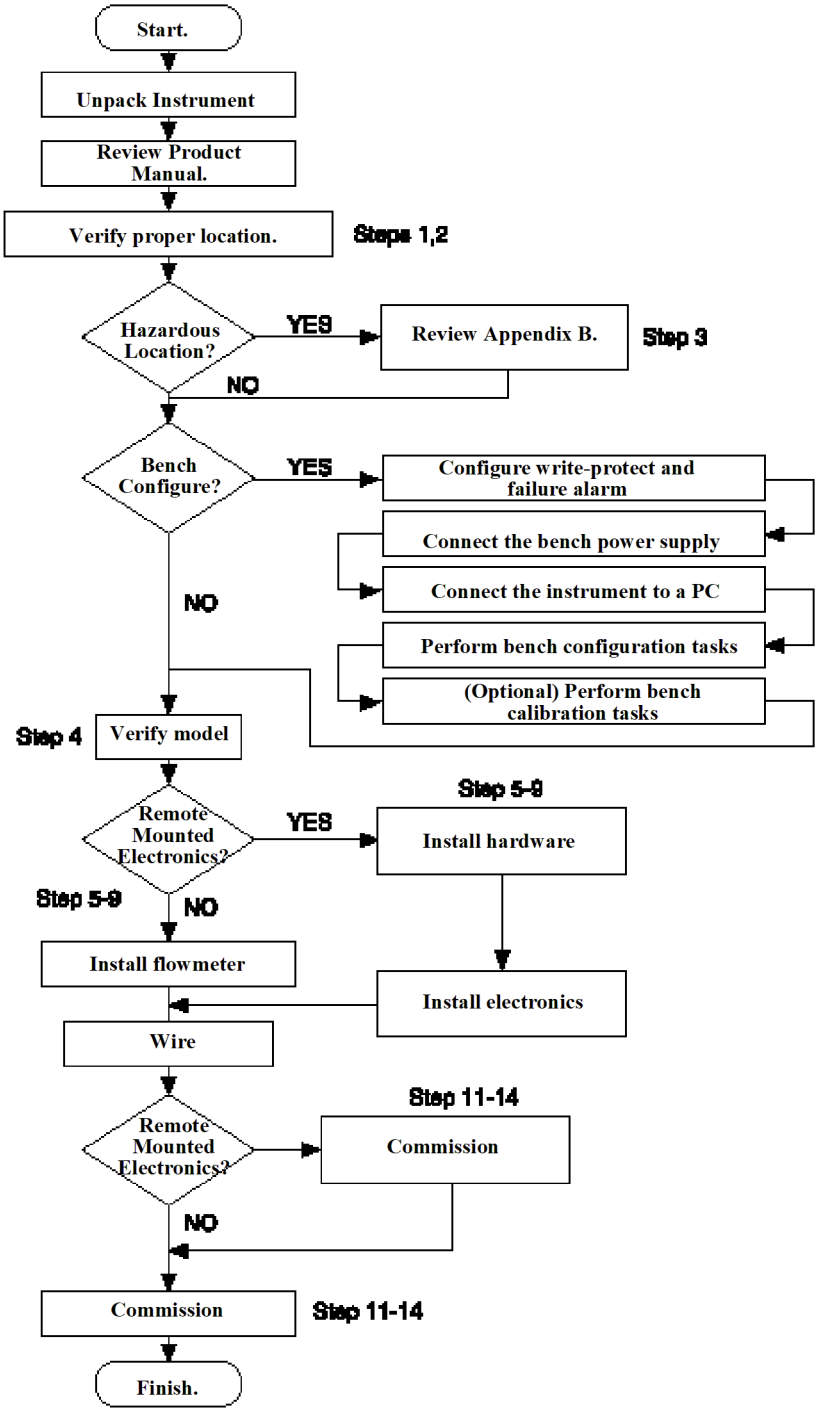

2.2.2 Handling

⚠ CAUTION

The product tag is not designed to withstand the weight of the flow meter. Do not lift the product by the tag.

Do not lift the product by the orifice holes. Holes have sharp edges that may cause personal injury.

Lift the product by the neck tube connecting the orifice plate to manifold/transmitter assembly.

2.2.3 Straight run requirements

Table 2-1: 405C Straight Pipe Requirements

	Beta	0.40	0.50	0.65
Upstream (inlet) side of primary(1)	Reducer	2	2	2
	Single 90° bend or tee	2	2	2
	Two or more 90° bends in the same plane	2	2	2
	Two or more 90° bends in different planes	2	2	2
	Up to 10° of swirl	2	2	2
	Butterfly valve (75% to 100% open)	2	5	5
Downstream (outlet) side of primary		2	2	2

(1) If a disturbance is not listed, consult an Emerson representative.

Table 2-2: 405P Straight Pipe Requirements

	Beta	0.40	0.50	0.65
Upstream (inlet) side of primary(1)(2)	Reducer	5	8	12
	Single 90° bend or tee	16	22	44
	Two or more 90° bends in the same plane	10	18	44
	Two or more 90° bends in different planes	50	75	60
	Expander	12	20	28
	Ball/gate valve fully open	12	12	18
Downstream (outlet) side of primary		6	6	7

(1) If a disturbance is not listed, consult an Emerson representative.
(2) If using flow straighteners, refer to ISO 5167 for recommended links.

2.2.4 Bolting a transmitter to the Rosemount 405

If the Rosemount 405 is ordered separately from the Rosemount transmitter and will be used in a direct-mount configuration, then it will need to be assembled to the

transmitter. Follow the directions below to assemble the 405 to a transmitter with a coplanar configuration.

Note
Units shipped from the factory direct-mounted are pressure-tested and characterized with the primary attached. Factory assembly is recommended for best performance.

Procedure

1. Remove the four body bolts from the transmitter.
2. Remove the socket head cap screws from the bottom of the coplanar flange and remove the coplanar flange.

   Note
   Protect the transmitter sensing diaphragms. Do not remove the O-rings in transmitter sensor module.

3. Carefully assemble the 405 to the pressure transmitter sensor. Ensure the “H” and “L” on transmitter and primary match.
4. Use studs and nuts supplied with the 405 to connect the transmitter sensor to the manifold head of the 405.
5. Preload to 150 in-lb then final torque at 300 in-lb. Tighten evenly in a cross pattern.

Figure 2-2: Bolting the 405 to a Transmitter

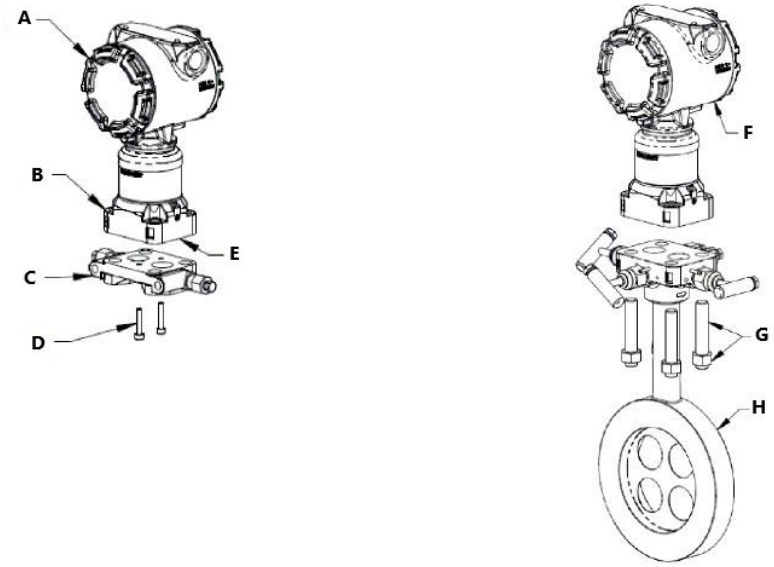

A. Transmitter
B. Sensing module
C. Coplanar flange
D. Flange screws
E. Sensing diaphragms and O-rings (do not disturb or remove)
F. Transmitter
G. Studs and nuts
H. Rosemount 405

2.3 Location and orientation

The primary element can be installed in any position around the circumference of the pipe, provided the vents are positioned properly for bleeding or venting. Optimal results for liquid in a vertical line or steam are obtained when flow is up.

Note
The maximum acceptable temperature for direct mounting is 450 °F (232 C°). Refer to Location and orientation if the process could potentially exceed this temperature.

2.3.1 Liquid - Rosemount 405C and 405P

Note
The 405 should not be used in vertical liquid or steam applications if the fluid is flowing down.

Figure 2-3: Liquid Application Mounting

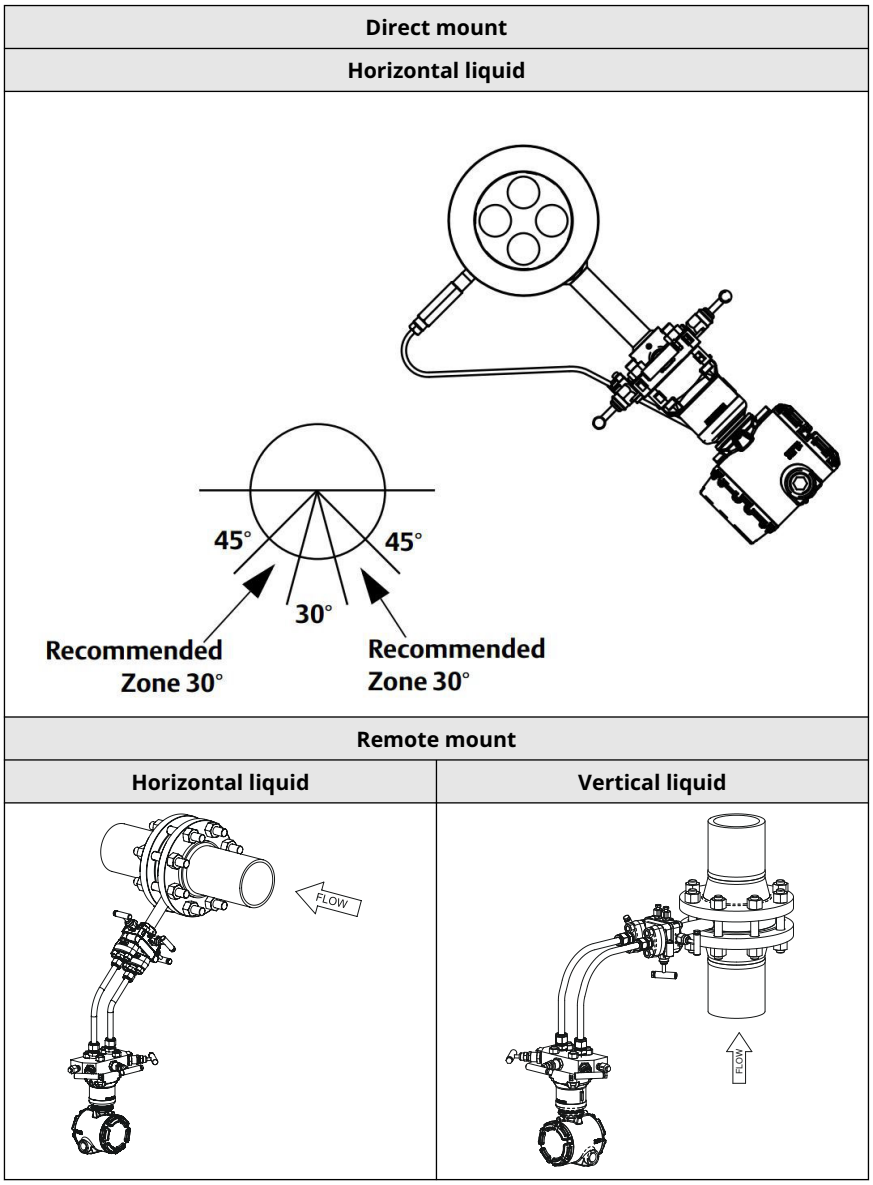

Vent location will depend on direction of flow. The vent is fixed to the downstream side.

2.3.2 Gas and Cryogenic - Rosemount 405C and 405P

Note
Due to drain vent orientation, a direct-mount 405 should not be used in vertical gas applications if the fluid is flowing up. Consider remote mounting the pressure transmitter to facilitate condensate draining.

Note
For cryogenic applications, a direct-mount flow meter can be used down to ambient temperatures of 40 °F (4 °C), provided the head and neck are uninsulated. Below this temperature, provisions should be made to maintain the temperature of the transmitter above 40 °F (4 °C).

Figure 2-4: Direct Mounting

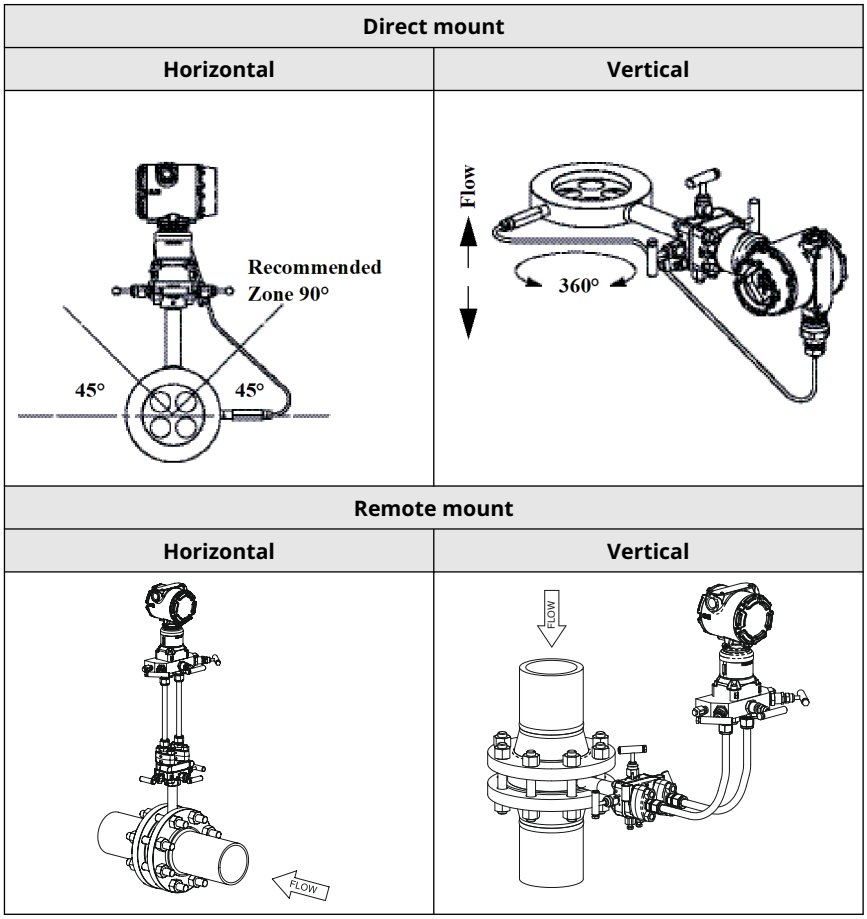

⚠ WARNING

Gas in vertical pipes

Mount the Rosemount 405 with vents on bottom to allow condensate drainage.

2.3.3 Steam - Rosemount 405C and 405P

Note
If the fluid is flowing down, then the 405 should not be used in vertical liquid or steam applications.

Figure 2-5: Direct and Remote Mounting

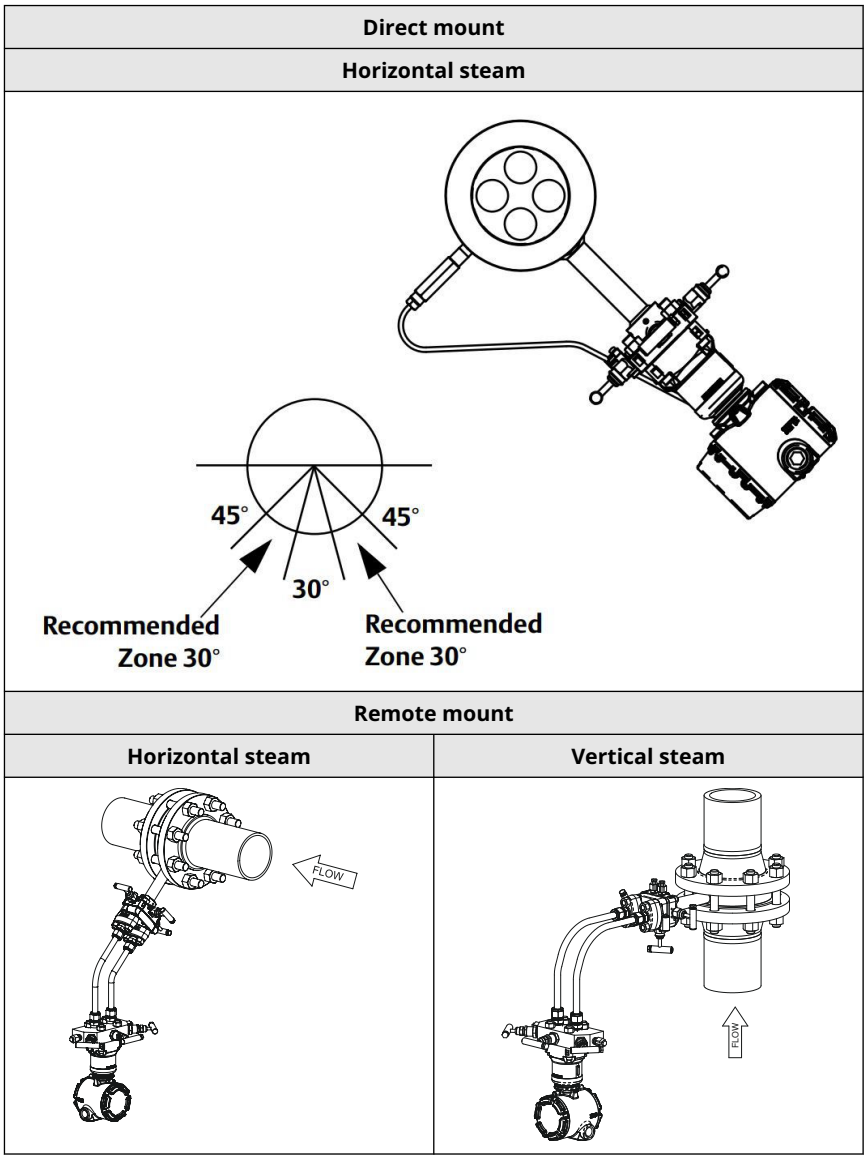

2.3.4 Process connections (remote mount only)

The 405 is available with either ¼—18 NPT connections (standard) or ½—14 NPT connections (option code E). The ½-inch connections can be rotated to attain connection centers of 2 in. (51 mm), 2⅛ in. (54 mm), or 2¼ in. (57 mm). The threads are Class 2; use a lubricant or sealant when making the process connections.

Ensure all four flange studs are installed and tightened prior to applying pressure to prevent process leakage. When properly installed, the flange studs will protrude through the top of the module housing.

Note
Do not attempt to loosen or remove the flange studs while the 405 is in service.

Perform the following to install flange adapters to the head of the 405.

Procedure

1. Place O-ring in the groove on bottom of the flange adapter.
2. Position flange adapters over NPT connections on the adapter plate.
3. Insert studs through 405 head, adapter plate, and flange adapters.
4. Thread nuts onto studs.
5. Tighten nuts to 300 in-lb. (34 N-m).

Figure 2-6: Installing the Flange Adapters to a 405

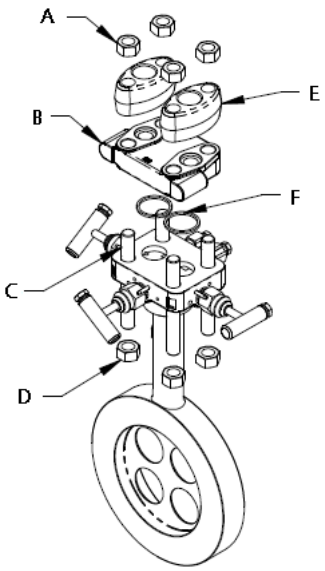

A. Nut
B. Adapter plate
C. Stud
D. Nut
E. Flange adapter
F. O-ring

When compressed, PTFE O-rings tend to cold flow, which aids in their sealing capabilities. When removing adapter plates or adapters, visually inspect the O-rings. Replace them if there are any signs of damage, such as nicks or cuts. If they are undamaged, then you may reuse them. If you replace the O-rings, then re-torque the nuts after installation to compensate for cold flow.

High temperature units (option code T)

Alloy O-rings should be replaced any time the unit is disassembled.

2.4 405 installation

Install the 405 according to the procedure below.

Procedure

1. Orient the assembly according to the guidelines provided in Location and orientation. Ensure the flow arrow is pointing in the same direction as the process flow.

   Note
   An ANSI alignment ring is provided standard with the 405. If a DIN or JIS alignment ring is required, it must be ordered as an option. Contact an Emerson sales representative for additional information.

   Note
   For ease of installation, the gasket may be secured to the flange face with small pieces of tape. Ensure the gasket and/or tape do not protrude into the pipe.

2. If using an alignment ring with through holes, then proceed to Step 9.
3. Insert two studs through the flange holes located opposite the head of the 405.
4. Place the alignment ring on the 405 body (see Figure 2-7).
5. Insert gaskets.
6. Insert the 405 between the flanges so that the indentations on the alignment ring contact the installed studs. The studs must contact the alignment ring in the indentation marked with the appropriate flange rating to ensure proper alignment.
7. Install remaining studs and nuts (hand tight). Ensure that three of the studs are in contact with the alignment ring.
8. Lubricate studs and tighten nuts in a cross pattern to the appropriate torque per local standards.

   Note
   Step 9 through Step 12 are for use with alignment rings that have through holes.

9. Place the alignment ring on the 405 body (see Figure 2-7).
10. Insert the 405 between the flanges. Insert one stud through the flange hole located opposite the 405 head; passing through the alignment ring through hole and the opposite flange hole. The stud must contact the alignment ring through the through hole marked with the appropriate flange rating to ensure proper alignment.
11. Repeat Step 10 for a second stud opposite the 405 head.
12. Insert gaskets.
13. Install remaining studs and nuts (hand tight). Ensure that three of the studs are in contact with the alignment ring.
14. Lubricate studs and tighten nuts in a cross pattern to the appropriate torque per local standards.

    Note
    Standard 1/16-inch gaskets are recommended for use with the 405. Using other gaskets could potentially caused a bias shift in the measurement.

2.4.1 Recommended insulation guidelines

For flow meters with integral temperature assembly:

Note
It is recommended for the meter to be insulated when the process ambient temperature is greater than 30 °F (–1 °C).

Procedure

1. For line sizes ½ in. (15 mm) to 4 in. (100 mm), it is recommended to have 4 in. (100 mm) of insulation of at least a 4.35 R-factor.
2. For line sizes 6 in. (150 mm) to 12 in. (300 mm), it is recommended to have 5 in. (125 mm) of insulation of at least a 4.35 R-factor.

   The full thickness stated above may not be necessary for the entire flow meter, but is required for the temperature sensor area at a minimum. Insulation is needed to ensure meeting our specified temperature measurement accuracy.

Figure 2-7: 405 Installation

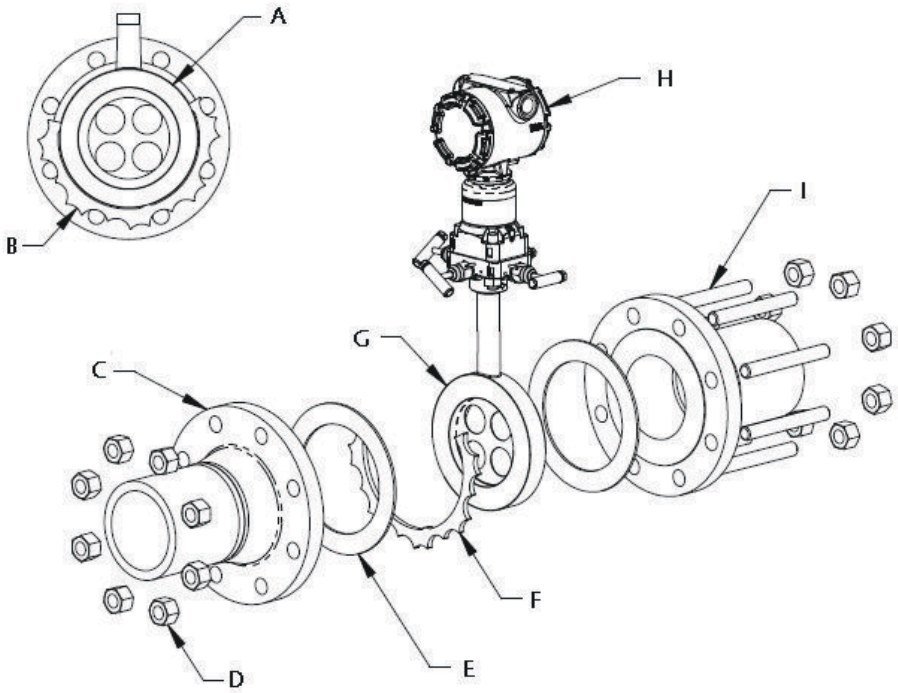

A. Rosemount 405(1)
B. Alignment ring
C. Existing pipe assembly with flange
D. Nut
E. Gasket (2)
F. Alignment ring
G. Rosemount 405(1)
H. Transmitter(2)
I. Stud

(1) This installation drawing applies to the 405C and 405P.
(2) The installation drawing applies when using the Rosemount 3051S, Rosemount 3051S MultiVariable™, Rosemount 3051, and Rosemount 2051 Transmitter. See the following documents for quick installation instruction of the transmitters:

Rosemount 3051S MultiVariable Transmitter Quick Start Guide

Rosemount 3051S Transmitter Quick Start Guide

Rosemount 3051 Transmitter Quick Start Guide

Rosemount 2051 Transmitter Quick Start Guide

2.4.2 Remote Resistance Temperature Detector (RTD) installation

A remote RTD requires that the process piping be modified. Follow site-specific requirements for installation. Install the RTD thermowell in close proximity downstream[(3)] of the primary element. The standard-supplied RTD connection cable is 12 feet long. Consult factory for longer lengths.

Drill a ⅝ in. (16 mm) to ¾ in. (19 mm) hole at the RTD location and weld on a customer-supplied 1 in. (25 mm) tall, ½—14 NPT weld coupling. The RTD thermowell threads into the weld coupling. The thermowell material is 316 SST with ½—14 ANPT threads. When installed, it will be inserted 1½ in. (38 mm) into the pipe internal diameter.

For remote RTD applications with pipe diameters less than 2 in. (50 mm), consult factory.

(3) For the 405P, at least six pipe diameters downstream of the primary element. For the 405C, two pipe diameters downstream of the primary element.

3 Commissioning

3.1 Safety messages

Instructions and procedures in this section may require special precautions to ensure the safety of the personnel performing the operations. Refer to the following safety messages before performing any operation in this section.

⚠ WARNING

Explosions could result in death or serious injury.

Do not remove the transmitter cover in explosive atmospheres when the circuit is live.

Before connecting a HART® Communicator in an explosive atmosphere, make sure the instruments in the loop are installed in accordance with intrinsically safe or non-incendive field wiring practices.

Verify that the operating atmosphere of the transmitter is consistent with the appropriate hazardous locations certifications.

Both transmitter covers must be fully engaged to meet explosion-proof requirements.

Failure to follow these installation guidelines could result in death or serious injury.

Ensure only qualified personnel perform the installation.

If the line is pressurized, serious injury or death could occur by opening valves.

3.2 Direct-mount applications

3.2.1 Liquid service

Procedure

1. Pressurize line.
2. Open the equalizer valve.
3. Open the high and low side valves.
4. Bleed drain/vent valves until no gas is apparent in the liquid.
5. Close the drain/vent valves.
6. Close the low side valve.
7. Check transmitter zero according to the transmitter product manual so that the output on the test meter reads zero percent of span.
8. Close the equalizer valve.
9. Open the low side valve. The system is now operational.

Figure 3-1: Direct-Mount Liquid Service

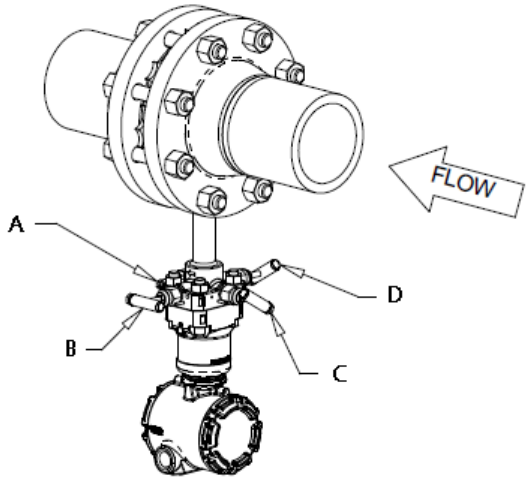

A. Drain/vent valve (2)
B. Low valve
C. Equalizer valve
D. High valve

3.2.2 Gas service

Procedure

1. Pressurize line.
2. Open the equalizer valve.
3. Open the high and low side valves.
4. Open drain/vent valves to ensure no liquid is present.
5. Close the drain/vent valves.
6. Close the low side valve.
7. Check transmitter zero according to the transmitter product manual so the output on the test meter reads zero percent of span.
8. Close the equalizer valve.
9. Open the low side valve. The system is now operational.

Figure 3-2: Direct-Mount Gas Service

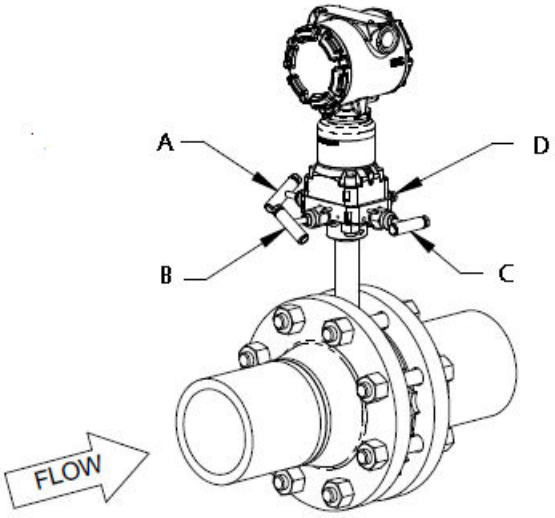

A. High valve
B. Equalizer valve
C. Low valve
D. Drain/vent valve (2)

3.2.3 Steam service

Procedure

1. Remove pressure from line.
2. Open equalizer, high, and low side valves.
3. Zero electronics.
4. Fill manifold and transmitter with water via drain vents.
5. Close low side valve to prevent possible heat damage to transmitter.
6. Pressurize line.
7. Gently tap electronics body, manifold head, and 405 body with a small wrench to dislodge any entrapped air.
8. Zero electronics.
9. Close the equalizer valve. Then open the low side valve.
   The system is now operational.

Figure 3-3: Direct-Mount Steam Service

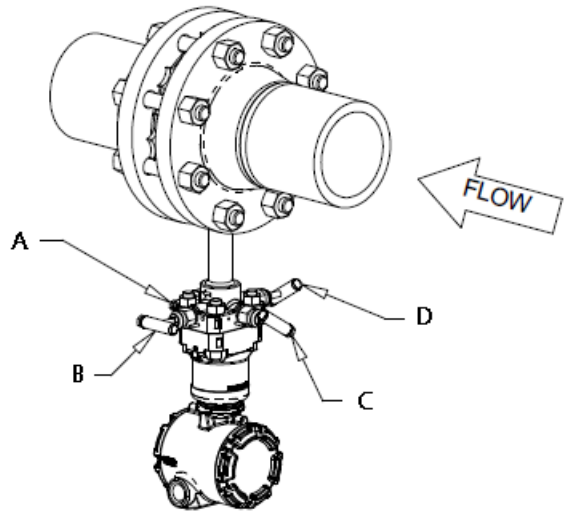

A. Drain/vent valve (2)
B. Low valve
C. Equalizer valve
D. High valve

3.3 Remote-mount applications

3.3.1 Liquid service

Procedure

1. Zero electronics and pressurize line.
2. Open equalizer valves on transmitter manifold and 405.
3. Open high and low side transmitter manifold valves and 405 valves.
4. Bleed vent valves on transmitter manifold until no air is present.
5. Close vent valves.
6. Close equalizer valve on 405.
7. Check transmitter zero. If transmitter does not read 0, repeat Step 1 through Step 7.
8. Close equalizer valve on transmitter manifold.

Figure 3-4: Remote Liquid Service

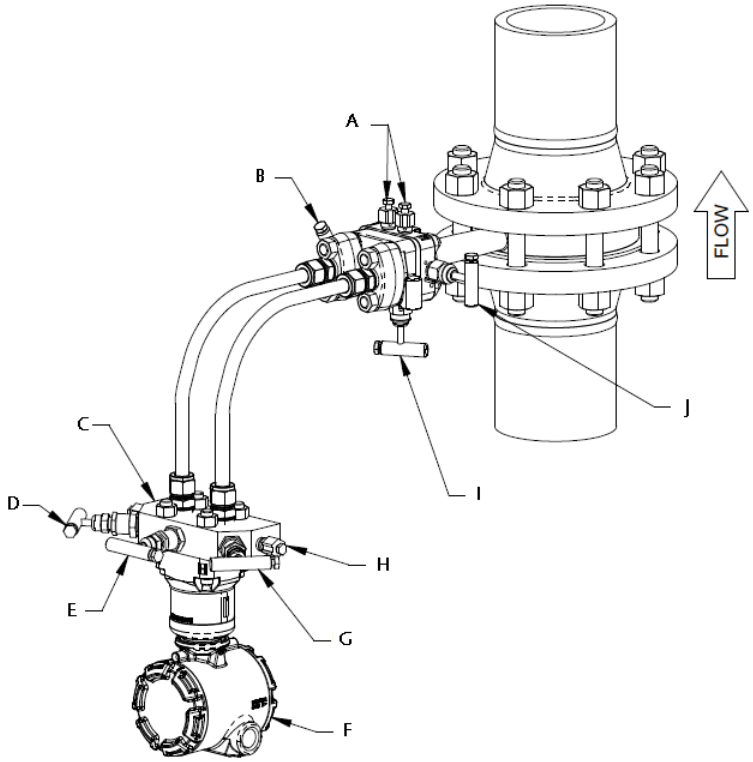

A. Vents
B. 405 High valve
C. Transmitter manifold
D. Manifold high valve
E. Manifold equalizer valve
F. Transmitter
G. Manifold low valve
H. Manifold vent
I. 405 Equalizer valve
J. 405 Low valve

3.3.2 Gas service

Procedure

1. Zero electronics and pressurize line.
2. Open equalizer valves on transmitter manifold and 405.
3. Open high and low side transmitter manifold valves and 405 valves.
4. Open drain/vent valves on transmitter manifold to ensure no liquids are present.
5. Close drain/vent valves.
6. Close low side transmitter manifold valve.

7. Close 405 equalizer valve.
8. Check transmitter zero. If transmitter does not read 0, repeat Step 1 through Step 7.
9. Close equalizer on transmitter manifold.
10. Open low side valve on transmitter manifold.
    The system is now operational.

Figure 3-5: Remote Gas Service

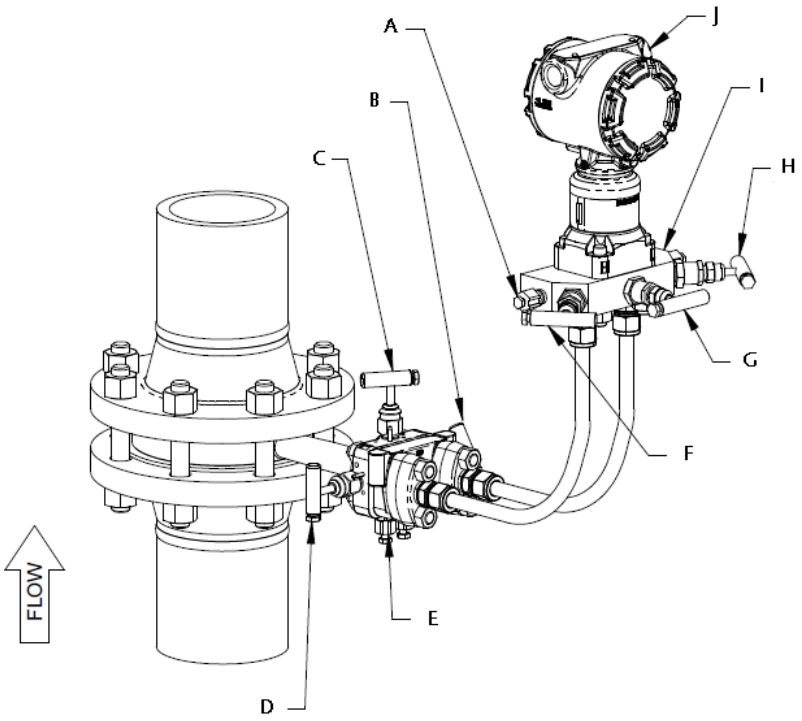

A. Manifold vents
B. 405 Low valve
C. 405 Equalizer valve
D. 405 High valve
E. Drain/vent valve
F. Manifold high valve
G. Manifold equalizer valve
H. Manifold low valve
I. Transmitter manifold
J. Transmitter

3.3.3 Steam service

Procedure

1. Remove pressure from line.
2. Open equalizer valves, high side valves, and low side valves on both the 405 and transmitter manifold.

3. Zero electronics.
4. Fill transmitter manifold, instrument lines, and 405 with water via drain/vents on transmitter manifold.
5. Close 405 equalizer valve and transmitter manifold vents.
6. Close low side transmitter manifold valve.
7. Pressurize line.
8. Gently tap electronics body, transmitter manifold, instrument lines, and 405 with a small wrench to dislodge any trapped air.
9. Check transmitter zero. If transmitter does not read 0, repeat Step 4 through Step 8.
10. Close the transmitter equalizer and open low side valve on transmitter manifold. The system is now operational.

Figure 3-6: Remote Steam Service

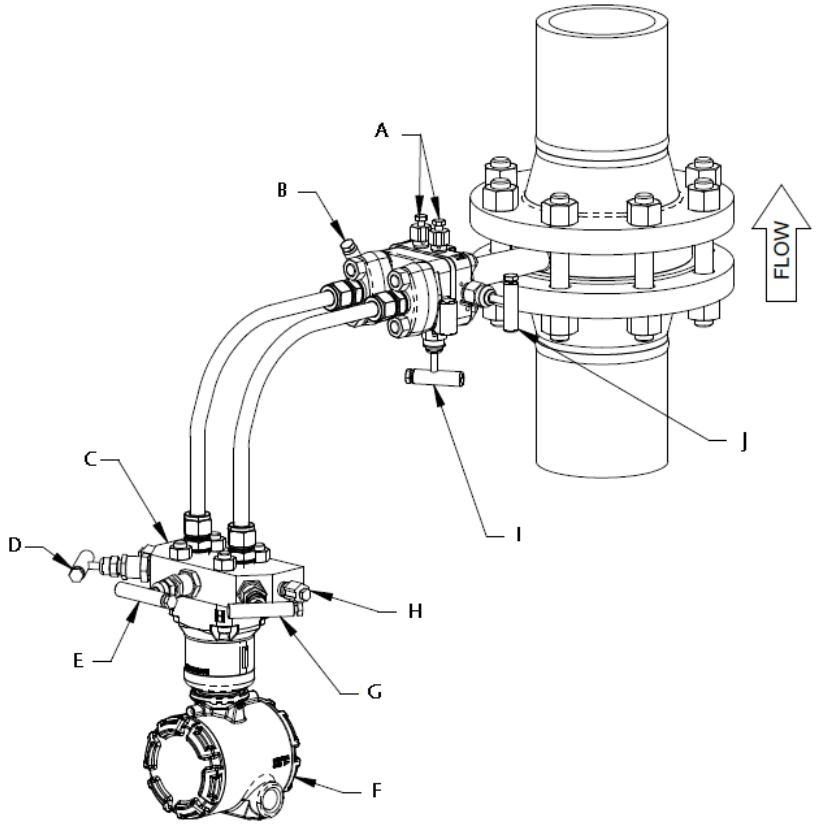

A. Drain/vents
B. 405 High valve
C. Transmitter manifold
D. Manifold high valve
E. Manifold equalizer valve
F. Transmitter
G. Manifold low valve
H. Manifold vent
I. 405 Equalizer valve
J. 405 Low valve

4 Operation and Maintenance

4.1 Safety messages

Procedures and instructions in this section may require special precautions to ensure the safety of the personnel performing the operations. Information that raises potential safety issues is indicated by a warning symbol (⚠). Refer to the following safety messages before performing an operation preceded by this symbol.

⚠ WARNING

Explosions could result in death or serious injury.

Do not remove the transmitter cover in explosive atmospheres when the circuit is live.

Both transmitter covers must be fully engaged to meet explosion-proof requirements.

Before connecting a communicator in an explosive atmosphere, ensure the instruments in the loop are installed in accordance with intrinsically safe or non-incendive field wiring practices.

Electrical shock could cause death or serious injury.

Avoid contact with the leads and terminals.

4.2 Troubleshooting

If a malfunction is suspected despite the absence of a diagnostic messages on the communicator display, then follow the procedures described below to verify that the flow meter hardware and process connections are in good working order. Always approach the most likely and easiest-to-check conditions first.

Symptom	Possible cause	Corrective action
Questionable accuracy or erroneous flow signal	Improper installation	• Is the flow arrow pointed in the direction of the flow? • Verify the cross reservoirs are perfectly level with one another. • Is there sufficient straight run upstream and downstream of the flow meter?
	System leaks	Check for leaks in instrument piping. Repair and seal all leaks.
	Contamination/ plugging	Remove the flow meter and check for contamination.
	Closed valve	• Verify that both Rosemount transmitter (PH and PL) or (MH and ML) valves are open. • Verify that vent, equalizer, and line valves are properly positioned per the “start up procedure”.

Symptom	Possible cause	Corrective action
	Calibration	Is the calibration too high or low for the flow rate?
	Connections (remote mount only)	Verify that the high side of the electronics is connected to the high side of the flow meter. Check the same for the low side.
	Entrapped air (liquid applications)	Are there uneven water legs caused by air entrapment in the instrument connections? If so, then bleed air.
	Rosemount transmitter misalignment	Misalignment of the flow meter beyond 3 degrees will cause an erroneous signal.
	Operating conditions	Are the operating conditions in compliance with those given at the time the flow meter was purchased? Check the flow calculation and the fluid parameters for accuracy. Double-check pipe inside diameter for proper sizing.
Spiking flow signal	Two-phase flow	The flow meter is a head measurement device and will not accurately measure a two-phase flow.
Spiking flow signal (stream service)	Improper insulation (vertical pipes only) Excessive vibration	Added insulation may be required to ensure that a phase change occurs at the cross reservoirs. Check the impulse piping for vibration.
Milliamp reading is zero	No flow in system Power polarity	• Check if power polarity is reversed. • Verify voltage across terminals (should be 10 to 55 Vdc). • Check for bad diode in terminal block. • Replace electronics terminal block.
Electronics not in communication	Power supply	• Check power supply voltage at electronics (10.5 V minimum). • Check load resistance (250 ohms minimum). • Check if unit is addressed properly. • Replace electronics board.
Milliamp reading is low or high	Zero trim	• Check pressure variable reading for saturation. • Check if output is in alarm condition. • Perform 4–20 mA output trim. • Replace electronics board.
No response to changes in applied flow	Blocked upstream piping and/or blocked impulse piping	• Check test equipment. • Check impulse piping for blockage. • Check for disabled span adjustment. • Check electronics security switch. • Verify calibration settings (4 and 20 mA points). • Contact factory for replacement.

Symptom	Possible cause	Corrective action
Low reading/high reading	Blocked upstream piping and/or blocked impulse piping	• Check impulse piping for blockage. • Check test equipment. • Perform full sensor trim (if software revision is 35 or higher). • Contact factory for replacement.
Erratic reading for pressure variable	Blocked upstream piping and/or blocked impulse piping	• Check impulse piping for blockage. • Check damping. • Check for EMF interference. • Contact factory for replacement.

Check flow direction

Check that the flow arrow on the neck of the 405 points in the direction of flow. If the DP transmitter is remote-mounted from the 405, then ensure that the impulse tubing is connected correctly from the 405 to the DP transmitter (high to high and low to low).

Check orientation

Improper orientation can result in inaccurate measurements.

Check zero

The transmitter may read off in the high or low direction if not zeroed properly at start-up/commissioning. Refer to the appropriate transmitter reference manual for additional information.

Check valves

The correct valve setting for flow measurement are; equalizer valve fully closed, high and low side valves fully open.

Check configuration/scaling

Is the 20 mA DP URL of the 405 set properly? This may involve sizing the 405 in the Toolkit Software program to confirm.

Confirm the Distributed Control System (DCS) or Programmable Logic Controller (PLC) and transmitter on 405 are scaled consistently.

Is the square root being taken in the DCS or transmitter attached to the 405? The square root should not be taken in both places.

Check Rosemount Pressure Transmitter configuration

If a Rosemount Pressure Transmitter is being used, then its enhanced functionality should be taken into account during configuration and troubleshooting. The square root should not be taken in the DCS if a 3051S MultiVariable™ Transmitter is being used.

See the Rosemount Pressure Transmitter Reference manuals for additional information:

- Rosemount 3051S MultiVariable Transmitter Reference Manual
- Rosemount 3051 Pressure Transmitter Reference Manual
- Rosemount 2051 Pressure Transmitter Reference Manual

4.3 Resistance Temperature Detector (RTD) maintenance

4.3.1 Replacing an RTD

Remote mount for compact conditioning and standard orifice

If an RTD needs to be replaced on a remote-mount Rosemount 405 with primary element technology P and C, proceed as follows:

Procedure

1. Close instrument valves to ensure the pressure is disconnected from the transmitter.
2. Open bleed valves on the transmitter to remove all pressure.
3. Remove cap.
4. Remove RTD wiring only from terminal.
5. Remove terminal housing from the head.
6. Pull RTD wire out of nipple and remove RTD. The RTD is in a thermowell, so no live line pressure will be present.
7. Install new RTD and thread wires through the nipple.
8. Using appropriate thread lubricant or tape, install terminal housing onto remote head.
9. Reconnect RTD wires to terminal. This diagram is for a typical RTD transmitter wiring connection.
10. Open instrument valves.

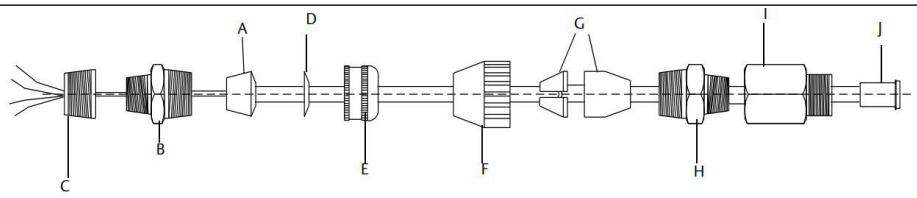

A. Rubber bushing (slide stop to edge of armored cable)
B. Compression fitting
C. ¾ to ½ in. NPT Adapter (screws into RTD connection head)
D. Washer
E. Cap
F. Cap
G. Bushing
H. Compression
I. Fitting
J. Connect to transmitter

Direct mount for compact conditioning and standard orifice

If an RTD needs to be replaced on a direct-mount Rosemount Integrated Orifice Flow Meter, proceed as follows:

Note
RTD wires are specifically bent for each unit, contact Emerson for replacement RTD cable prior to disassembling the unit.

Procedure

1. Close instrument valves to ensure that the pressure is disconnected from the transmitter.
2. Open the bleed valves on the transmitter to remove all pressure.
3. Remove the cap.
4. Remove the RTD wiring only from the terminal.
5. Unscrew the union adapter from the transmitter's conduit entry.
6. Unscrew the hex compression fitting from the 405 Orifice Plate and remove the RTD and metal wire from the unit. Remove the union adapter and hex compression fitting from RTD cable.
7. With the terminal block facing the user, thread the male half of the union adapter into the transmitter's left conduit entry, wrench tight.
8. Thread the hex compression fitting into the side of the 405 orifice plate, wrench tight.
9. Insert the new RTD into the compression fitting until it bottoms out.
10. Tighten the plug on top of the compression fitting, wrench tight.
11. Attach the female end of the union adapter to the wire end of the RTD, wrench tight.
12. Run the wires into the conduit entry and connect both halves of the union fitting together with the coupling nut, wrench tight.
13. Reconnect the RTD wires to the terminal.
14. Open the instrument valves.

4.3.2 Electrical RTD check procedure

If the RTD is not functioning properly, perform the following checks to determine if the RTD is functioning properly. Figure 4-1 shows the schematic of a 4-wire RTD.

Continuity check

Procedure

1. Using an Ohm meter or a multimeter, check the resistance between each of the red and white wires.
2. If the resistance measured represents the proper temperature, proceed to the Grounding check.
3. If the resistance measured does not represent the proper temperature or no resistance is measured (i.e. Open circuit), the RTD is damaged and must be replaced.

Grounding check

Procedure

1. Using an Ohm meter or a Multimeter, test for each wire of the RTD to the sheath for a resistance value. All tests should measure an infinite resistance (i.e. open circuit) between the RTD wires and the sheath.
2. If all tests verify an open circuit, the RTD is functioning properly.
3. If any tests confirm a shorted wire to the RTD sheath, the RTD is damaged and must be replaced.

Figure 4-1: Schematic of a Typical 4-Wire RTD

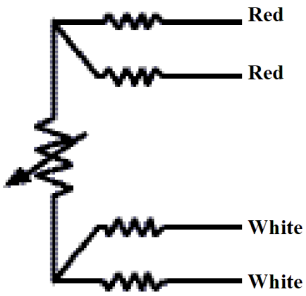

A Reference Data

A.1 Ordering information

• = Available

— = Unavailable

A.1.1 Rosemount 3051SFC Compact Flow Meter

The Standard offering represents the most common options. The starred options (★) should be selected for best delivery. The Expanded offering is subject to additional delivery lead time.

Required model components

Table A-1: Model

Code	Description	Measurement type		
		D	1–7	
3051SFC	Compact flow meter	•	•	

Table A-2: Measurement Type

Code	Description	Measurement type		
		D	1–7	
1	Fully compensated mass and energy flow calculations – differential and static pressures with temperature	—	•	★
2	Compensated flow calculations – differential and static pressures	—	•	★
3	Compensated flow calculations – differential pressure and temperature	—	•	★
4	Compensated flow calculations – differential pressure	—	•	★
5	Process variables only (no flow calculations) – differential and static pressures with temperature	—	•	★
6	Process variables only (no flow calculations) – differential and static pressures	—	•	★
7	Process variables only (no flow calculations) – differential pressure and temperature	—	•	★
D	Differential pressure	•	—	★

Table A-3: Primary Element Technology

Code	Description	Measurement type		
		D	1–7	
C	Conditioning orifice plate	•	•	★
P	Orifice plate	•	•	★

Table A-4: Material Type

Code	Description	Measurement type		
		D	1–7	
S	316 SST	•	•	★

Table A-5: Line Size

Code	Description	Measurement type		
		D	1–7	
005(1)	½ in. (15 mm)	•	•	★
010(1)	1 in. (25 mm)	•	•	★
015(1)	1½ in. (40 mm)	•	•	★
020	2 in. (50 mm)	•	•	★
030	3 in. (80 mm)	•	•	★
040	4 in. (100 mm)	•	•	★
060	6 in. (150 mm)	•	•	★
080	8 in. (200 mm)	•	•	★
100(2)	10 in. (250 mm)	•	•	★
120(2)	12 in. (300 mm)	•	•	★

(1) Available with primary element technology P code only.
(2) For the 10 in. (250 mm) and 12 in. (300 mm) line sizes, the alignment ring must be ordered (Installation Accessories).

Table A-6: Primary Element Type

Code	Description	Measurement type		
		D	1–7	
N040	0.40 Beta ratio (β)	•	•	★
N050	0.50 Beta ratio (β)	•	•	★
N065(1)	0.65 Beta ratio (β)	•	•	★

(1) For 2 in. (50 mm) line size, the beta ratio is 0.60 for primary element technology code C.

Table A-7: Temperature Measurement

Code	Description	Measurement type		
		D	1–7	
T(1)	Integral Resistance Temperature Detector (RTD)	—	•	★
0	No temperature sensor	•	•	★
R(1)	Remote thermowell and RTD	•	•	

(1) A temperature sensor is required for measurement types 1, 3, 5, and 7. If the temperature sensor will be customer-supplied, contact an Emerson representative for assistance.

Table A-8: Transmitter Connection Platform

Code	Description	Measurement type		
		D	1–7	
3	Direct-mount, integral 3-valve manifold	•	•	★
7	Remote-mount, NPT connections	•	•	★

Table A-9: Differential Pressure Range

Code	Description	Measurement type		
		D	1–7	
1	0 to 25 inH_2O (0 to 62.16 mbar)	•	•	★
2	0 to 250 inH_2O (0 to 621.60 mbar)	•	•	★
3	0 to 1,000 inH_2O (0 to 2.49 bar)	•	•	★

Table A-10: Static Pressure Range

Code	Description	Measurement type		
		D	1–7	
A(1)	None	•	•	★
D	Absolute (0 to 800 psia [0 to 55.16 bar])	—	•	★
E(2)	Absolute (0 to 3,626 psia [0 to 250.0 bar])	—	•	★
J	Gauge (–14.20 to 800 psig [–0.98 to 55.16 bar])	—	•	★
K(2)	Gauge (–14.20 to 3,626 psig [–0.98 to 250.0 bar])	—	•	★

(1) Required for measurement type codes 3, 4, 7, and D.
(2) For measurement type codes 1, 2, 5, and 6 with DP range 1, absolute limits are 0.5 to 2,000 psi (0.03 to 137.9 bar) and gauge limits are –14.2 to 2,000 psig (–0.98 to 137.9 bar).

Table A-11: Transmitter Output

Code	Description	Measurement type		
		D	1–7	
A	4–20 mA with digital signal based on HART® protocol	•	•	★
F(1)(2)	FOUNDATION™ Fieldbus protocol	•	•	★
X(3)(4)	Wireless	•	—	★

(1) Requires Plantweb™ housing.
(2) Transmitter output code F is only available with measurement type codes 1, 2, 5, 6, and D.
(3) Only intrinsically safe approval codes apply.
(4) Only available with measurement types D and 6.

Table A-12: Transmitter Housing Style

Code	Description	Material	Conduit entry size	Measurement type		
				D	1–7	
00	None[1]	N/A	N/A	•	—	★
1A	Plantweb™ housing	Aluminum	½—14 NPT	•	•	★
1B	Plantweb housing	Aluminum	M20 x 1.5	•	•	★
1J	Plantweb housing	SST	½—14 NPT	•	•	★
1K	Plantweb housing	SST	M20 x 1.5	•	•	★
2E	Junction box housing with output for remote display and interface	Aluminum	½—14 NPT	•	—	★
2F	Junction box housing with output for remote display and interface	Aluminum	M20 x 1.5	•	—	★
2M	Junction box housing with output for remote display and interface	SST	½—14 NPT	•	—	★
5A[2]	Wireless Plantweb housing	Aluminum	½—14 NPT	•	•	★
5J[2]	Wireless Plantweb housing	SST	½—14 NPT	•	•	★
1C	Plantweb housing	Aluminum	G½	•	•	
1L	Plantweb housing	SST	G½	•	•	
2G	Junction box housing with output for remote display and interface	Aluminum	G½	•	—	

(1) Customer-supplied electrical connection.
(2) Only available with transmitter output code X.

Table A-13: Performance Class

Code	Description	Measurement type		
		D	1–7	
Measurement types 1, 2, 5, and 6				
3[1]	Ultra for Flow: 0.75% flow rate accuracy, 14:1 flow turndown, 15-year stability, 15-year limited warranty	•	•	★
5	Classic MV: 1.10% flow rate accuracy, 8:1 flow turndown, 15-year stability	—	•	★
Measurement types 3, 4, 7, and D				
1	Ultra: up to 0.90% flow rate accuracy, 8:1 flow turndown, 15-year stability, 15-year limited warranty	•	—	★
2	Classic: up to 1.40% flow rate accuracy, 8:1 flow turndown, 15-year stability	•	—	★
3[1]	Ultra for Flow: 0.75% flow rate accuracy, 14:1 flow turndown, 15-year stability, 15-year limited warranty	•	•	★

(1) Only available with differential pressure ranges 2 and 3, and silicone fill fluid.

Wireless options

Table A-14: Update Rate, Operating Frequency, and Protocol

Code	Description	Measurement type		
		D	1–7	
WA3	User-configurable update rate, 2.4 GHz DSSS, IEC 62591 (*Wireless*HART®)	•	•	★

Table A-15: Omni-directional Wireless Antenna and SmartPower™

Code	Description	Measurement type		
		D	1–7	
WJ1	Remote antenna, adapter for Black Power Module (Intrinsically Safe [I.S.] Power Module sold separately)	•	—	★
WK1	External antenna, adapter for Black Power Module (I.S. Power Module sold separately)	•	•	★
WM1	Extended range, external antenna, adapter for Black Power Module (I.S. Power Module sold separately)	•	•	★
WN1	High-gain, remote antenna, adapter for Black Power Module (I.S. Power Module sold separately)	•	•	

Additional options

Table A-16: HART® Revision Configuration (Requires HART Protocol Output Code A)

Code	Description	Measurement type		
		D	1–7	
HR7	Configured for HART Revision 7	•	—	★

Table A-17: Extended Product Warranty

Code	Description	Measurement type		
		D	1–7	
WR3	3-year limited warranty	•	•	★
WR5	5-year limited warranty	•	•	★

Table A-18: Installation Accessories

Code	Description	Measurement type		
		D	1–7	
A[(1)]	ANSI alignment ring (Class 150)	•	•	★
C[(1)]	ANSI alignment ring (Class 300)	•	•	★
D[(1)]	ANSI alignment ring (Class 600)	•	•	★
G	DIN alignment ring (PN 16)	•	•	★
H	DIN alignment ring (PN 40)	•	•	★
J	DIN alignment ring (PN 100)	•	•	★
B	JIS alignment ring (10K)[(2)]	•	•	

Table A-18: Installation Accessories *(continued)*

Code	Description	Measurement type		
		D	1–7	
R	JIS alignment ring (20K)	•	•	
S	JIS alignment ring (40K)	•	•	

(1) Only required for 10 in. (250 mm) and 12 in. (300 mm) line sizes.
(2) Not available on 12 in. (300 mm) line size.

Table A-19: Remote Adapters

Code	Description	Measurement type		
		D	1–7	
E	Flange adapters 316 SST (½ in. NPT)	•	•	★

Table A-20: High Temperature Applications

Code	Description	Measurement type		
		D	1–7	
T	Graphite valve packing (T_{max} = 850 °F [454 °C])	•	•	

Table A-21: Flow Calibration

Code	Description	Measurement type		
		D	1–7	
WC(1)	Flow calibration, 3-point conditioning orifice option C	•	•	
WD(1)	Flow calibration, 10-point conditioning orifice option C	•	•	

(1) Available with primary element technology code C only.

Table A-22: Pressure Testing

Code	Description	Measurement type		
		D	1–7	
P1	Hydrostatic testing with certificate	•	•	★

Table A-23: Special Cleaning

Code	Description	Measurement type		
		D	1–7	
P2	Cleaning for special processes	•	•	

Table A-24: Special Inspection

Code	Description	Measurement type		
		D	1–7	
QC1	Visual and dimensional inspection with certificate	•	•	★
QC7	Inspection and performance certificate	•	•	★

Table A-25: Transmitter Calibration Certification

Code	Description	Measurement type		
		D	1–7	
Q4	Calibration certificate for transmitter	•	•	★
QP	Calibration certificate and tamper evident seal	•	•	★

Table A-26: Quality Certification for Safety

Code	Description	Measurement type		
		D	1–7	
QT	Safety-certified to IEC 61508 with certificate of failure modes, effects, and diagnostic analysis (FMEDA) data	•	—	★

Table A-27: Material Traceability Certification

Code	Description	Measurement type		
		D	1–7	
Q8	Material traceability certificate per EN 10204:2004 3.1	•	•	★

Table A-28: Positive Material Identification (PMI)

Code	Description	Measurement type		
		D	1–7	
Q76	PMI verification and certificate	•	•	★

Table A-29: Code Conformance

Code	Description	Measurement type		
		D	1–7	
J2	ANSI/ASME B31.1	•	•	
J3	ANSI/ASME B31.3	•	•	
J5[(1)(2)]	Certificate of Compliance to NACE® MR0175/ISO 15156 for wetted materials	•	•	

(1) Materials of construction comply with metallurgical requirements within NACE MR0175/ISO 15156 for sour oil field production environments. Environmental limits apply to certain materials. Consult latest standard for details. Selected materials also conform to NACE MR0103 for sour refining environments.

(2) Selecting J5 option will provide Alloy C-276 transmitter diaphragms.

Table A-30: Country Certification

Code	Description	Measurement type		
		D	1–7	
J1	Canadian Registration	•	•	
J8	Chinese Certificate of Special Equipment Type Test	•	•	

Table A-31: Product Certifications

Code	Description	Measurement type		
		D	1–7	
E1	ATEX Flameproof	•	•	★
I1	ATEX Intrinsic Safety	•	•	★
IA[1]	ATEX FISCO Intrinsic Safety	•	•	★
N1	ATEX Type n	•	•	★
ND	ATEX Dust	•	•	★
K1	ATEX Flameproof, Intrinsic Safety, Type n, Dust (combination of E1, I1, N1, and ND)	•	•	★
I2	Brazil Intrinsic Safety	•	•	★
K2	Brazil Flameproof, Intrinsic Safety	•	•	★
IB	Brazil FISCO Intrinsic Safety	•	•	★
E4	Japan Flameproof	•	•	★
E5	USA Explosion-proof, Dust Ignition-proof	•	•	★
I5	USA Intrinsically Safe; Non-incendive	•	•	★
IE[1]	USA FISCO Intrinsic Safety	•	•	★
K5	USA Explosion-proof, Dust Ignition-proof, Intrinsically Safe, Division 2 (combination of E5 and I5)	•	•	★
E6[2]	Canada Explosion-proof, Dust Ignition-proof, Division 2	•	•	★
I6	Canada Intrinsically Safe	•	•	★
IF[1]	Canada FISCO Intrinsic Safety	•	•	★
K6[2]	Canada Explosion-proof, Dust Ignition-proof, Intrinsically Safe, Division 2 (combination of E6 and I6)	•	•	★
E7	IECEx Flameproof, Dust Ignition-proof	•	•	★
I7	IECEx Intrinsic Safety	•	•	★
IG[1]	IECEx FISCO Intrinsic Safety	•	•	★
K7	IECEx Flameproof, Dust Ignition-proof, Intrinsic Safety, Type n (combination of E7, I7, and N7)	•	•	★
E3	China Flameproof	•	•	★
I3	China Intrinsic Safety	•	•	★
EP	Republic of Korea Flameproof	•	•	★
IP	Republic of Korea Intrinsic Safety	•	•	★
KP	Republic of Korea Flameproof, Intrinsic Safety	•	•	★
KA[2]	ATEX and Canada Flameproof, Intrinsically Safe, Division 2 (combination of E1, I1, E6, and I6)	•	•	★
KB[2]	USA and Canada Explosion-proof, Dust Ignition-proof, Intrinsically Safe, Division 2 (combination of E5, E6, I5, and I6)	•	•	★
EM	Technical Regulations Customs Union (EAC) Flameproof	•	•	★
IM	Technical Regulations Customs Union (EAC) Intrinsic Safety	•	•	★

Table A-31: Product Certifications *(continued)*

Code	Description	Measurement type		
		D	1–7	
KM	Technical Regulations Customs Union (EAC) Flameproof, Intrinsic Safety	•	•	★
E2	Brazil Flameproof	•	•	★
KC	USA and ATEX Explosion-proof, Intrinsically Safe, Division 2 (combination of E5, E1, I5, and I1)	•	•	★
KD(2)	USA, Canada, and ATEX Explosion-proof, Intrinsically Safe (combination of E5, I5, E6, I6, E1, and I1)	•	•	★
KL	USA, Canada, IECEx, ATEX Intrinsic Safety Combination	•	•	★
KS	USA, Canada, IECEx, ATEX Explosion Proof, Intrinsically Safe, Dust, Non-incendive, Type N, Div. 2	•	•	★

(1) FISCO is only available with transmitter output code F.
(2) Not available with M20 or G½ conduit entry size.

Table A-32: Shipboard Approvals

Code	Description	Measurement type		
		D	1–7	
SBS	American Bureau of Shipping	•	•	★
SBV	Bureau Veritas (BV) Type Approval	•	•	★
SDN	Det Norske Veritas (DNV) Type Approval	•	•	★
SLL	Lloyd's Register (LR) Type Approval	•	•	★

Table A-33: Sensor Fill Fluid and O-ring Options

Code	Description	Measurement type		
		D	1–7	
L1	Inert sensor fill fluid	•	•	★
L2	Graphite-filled (PTFE) O-ring	•	•	★
LA	Inert sensor fill fluid and graphite-filled (PTFE) O-ring	•	•	★

Table A-34: Digital Display

Code	Description	Measurement type		
		D	1–7	
M5	Plantweb™ LCD display (requires Plantweb housing)	•	•	★
M7(1)(2)(3)	Remote-mount LCD display and interface, Plantweb housing, no cable; SST bracket	•	—	★
M8(1)(2)	Remote-mount LCD display and interface, Plantweb housing, 50 ft. (15 m) cable; SST bracket	•	—	★
M9(1)(2)	Remote-mount LCD display and interface, Plantweb housing, 100 ft. (31 m) cable; SST bracket	•	—	★

(1) Not available with transmitter output code X. Only available with measurement type D.

(2) Not available with transmitter output code F, option code DA2, or option code QT.
(3) See the Rosemount 3051S Reference Manual for cable requirements. Contact an Emerson representative for additional information.

Table A-35: Transient Protection

Code	Description	Measurement type		
		D	1–7	
T1	Transient terminal block(1)	•	•	★

(1) This is not available with housing code 00, 5A, 5J, or 7J. External ground screw assembly (option code D4) is included with the T1 option. The T1 option is not needed with FISCO Product Certifications.

Table A-36: Manifold for Remote-Mount Option

Code	Description	Measurement type		
		D	1–7	
F2	3-valve manifold, SST	•	•	★
F6	5-valve manifold, SST	•	•	★

Table A-37: Plantweb Control Functionality

Code	Description	Measurement type		
		D	1–7	
A01	FOUNDATION™ Fieldbus advanced control function block suite	•	•	★

Table A-38: Plantweb Diagnostics Functionality

Code	Description	Measurement type		
		D	1–7	
D01	FOUNDATION™ Fieldbus diagnostics suite (Process Intelligence, Plugged Impulse Line diagnostic)	•	—	★
DA2(1)	Advanced HART® diagnostic suite, which consists of the following: • Process Intelligence • Loop Integrity • Plugged Impulse Line diagnostic • Process Alerts • Service Alerts • Variable Log • Event Log	•	—	★

(1) Includes hardware adjustments (option code D1) as standard. Not available with transmitter output code X or F. Only available with measurement type D.

Table A-39: Plantweb Enhanced Measurement Functionality

Code	Description	Measurement type		
		D	1–7	
H01	FOUNDATION™ Fieldbus fully compensated mass flow block	•	—	★

Table A-40: Cold Temperature

Code	Description	Measurement type		
		D	1–7	
BRR	–58 °F (–50 °C) cold temperature start-up	—	•	★
BR6	–76 °F (–60 °C) cold temperature operation	•	—	★

Table A-41: Alarm Limit

Code	Description	Measurement type		
		D	1–7	
C4	NAMUR alarm and saturation levels, high alarm	•	•	★
C5	NAMUR alarm and saturation levels, low alarm	•	•	★
C6	Custom alarm and saturation levels, high alarm (requires C1 and Configuration Data Sheet)	•	•	★
C7	Custom alarm and saturation levels, low alarm (requires C1 and Configuration Data Sheet)	•	•	★
C8	Low alarm (standard Rosemount alarm and saturation levels)	•	•	★

Table A-42: Hardware Adjustments and Ground Screw

Code	Description	Measurement type		
		D	1–7	
D1[(1)(2)(3)]	Hardware adjustments (zero, span, alarm, security)	•	—	★
D4[(4)]	External ground screw assembly	•	•	★
DA[(1)(2)(3)]	Hardware adjustments (zero, span, alarm, security) and external ground screw assembly	•	—	★

(1) Not available with output code X. Only available with measurement type D.
(2) Not available with output protocol code F.
(3) Not available with housing codes 2E, 2F, 2G, 2M, 5A, 5J, or 7J.
(4) This assembly is included with options EP, KP, E1, N1, K1, ND, E4, E7, K7, E3, KA, KC, KD, IA, T1, EM, and KM.

Table A-43: Conduit Plug

Code	Description	Measurement type		
		D	1–7	
DO	316 SST conduit plug	•	•	★

Table A-44: Conduit Electrical Connector

Code	Description	Measurement type		
		D	1–7	
ZE	M12, 4-pin, male connector (eurofast®)	•	•	★
ZM	A size mini, 4-pin, male connector (minifast®)	•	•	★

Typical model number: `3051SFC 1 C S 060 N 065 T 3 2 J A 1A 3`

A.1.2 Rosemount 3051CFC Compact Flow Meter

The Standard offering represents the most common options. The starred options (★) should be selected for best delivery. The Expanded offering is subject to additional delivery lead time.

Required model components

Table A-45: Model

Code	Description	
3051CFC	Compact flow meter	★

Table A-46: Measurement Type

Code	Description	
D	Differential pressure	★

Table A-47: Primary Element Technology

Code	Description	
C	Conditioning orifice plate	★
P	Orifice plate	★

Table A-48: Material Type

Code	Description	
S	316 SST	★

Table A-49: Line Size

Code	Product description	
005(1)	½ in. (15 mm)	★
010(1)	1 in. (25 mm)	★
015(1)	1½ in. (40 mm)	★
020	2 in. (50 mm)	★
030	3 in. (80 mm)	★
040	4 in. (100 mm)	★
060	6 in. (150 mm)	★
080	8 in. (200 mm)	★

Table A-49: Line Size *(continued)*

Code	Product description	
100	10 in. (250 mm)	★
120	12 in. (300 mm)	★

(1) Available with orifice plate (code P) only.

Table A-50: Primary Element Type

Code	Description	
N040	0.40 Beta ratio (β)	★
N050	0.50 Beta ratio (β)	
N065(1)	0.65 Beta ratio (β)	★

(1) For 2 in. (50 mm) line sizes, the primary element type is 0.60 for conditioning orifice plate (code C).

Table A-51: Temperature Measurement

Code	Description	
0	No temperature sensor	★
R	Remote thermowell and Resistance Temperature Detector (RTD)	

Table A-52: Transmitter Connection Platform

Code	Description	
3	Direct-mount, integral 3-valve manifold	★
7	Remote-mount, NPT connections	★

Table A-53: Differential Pressure Range

Code	Description	
1	0 to 25 inH_2O (0 to 62.16 mbar)	★
2	0 to 250 inH_2O (0 to 621.60 mbar)	★
3	0 to 1,000 inH_2O (0 to 2.49 bar)	★

Table A-54: Transmitter Output

Code	Description	
A	4–20 mA with digital signal based on HART® Protocol	★
F	FOUNDATION™ Fieldbus Protocol	★
W(1)	PROFIBUS® PA Protocol	★
X(2)	Wireless(3)	★
M(4)	Low-power, 1–5 Vdc with digital signal based on HART Protocol	

(1) For local addressing and configuration, M4 (LOI) is required. Not available with product certification codes EM, IM, KM, KL, and KS.
(2) This option is only available with intrinsically safe approvals.

(3) Requires wireless options and engineered polymer housing.
(4) Only available with C6, E2, E5, I5, K5, KB, EM, IM, KM, EP, and E8 product certifications.

Table A-55: Housing Material

Code	Description	Conduit entry size	
A	Aluminum	½—14 NPT	★
B	Aluminum	M20 x 1.5	★
J	SST	½—14 NPT	★
K	SST	M20 x 1.5	★
P(1)	Engineered polymer	No conduit entries	★
D(2)	Aluminum	G½	
M(2)	SST	G½	

(1) Only available with wireless output (code X).
(2) Transmitter conduit entry will be ½ NPT and a ½ NPT to G½ thread adapter will be provided. These options are only available with product certifications option I1. Product certifications option IG is available with aluminum only (option D).

Table A-56: Transmitter Performance Class

Code	Description	
1	Up to ±1.75% flow rate accuracy, 8:1 flow turndown, 5-year stability	★

Wireless options

Requires wireless output (code X) and engineered polymer housing (code P).

Table A-57: Wireless Transmit Rate, Operating Frequency, and Protocol

Code	Description	
WA3	User-configurable transmit rate, 2.4 GHz *Wireless*HART®	★

Table A-58: Antenna and SmartPower™

Code	Description	
WP5	Internal antenna, compatible with Green Power Module(1)	★

(1) Intrinsically Safe (IS) Power Module sold separately.

Additional options

Table A-59: Local Wireless Device Access

Code	Description	
BLE(1)	Bluetooth® configuration and maintenance	★

(1) Requires the graphical LCD display (code M6).

Table A-60: Extended Product Warranty

Code	Description	
WR3	3-year limited warranty	★

Table A-60: Extended Product Warranty *(continued)*

Code	Description	
WR5	5-year limited warranty	★

Table A-61: Alternate Transmitter Diaphragm Material

Code	Description	
ID2	316 SST	
ID3	Alloy C-276	
ID4(1)	Alloy 400	
ID5(1)	Tantalum	
ID6(1)	Gold-plated Alloy 400(2)	
ID7(1)	Gold-plated SST	

(1) Not available with wireless output (code X).
(2) Includes graphite-filled PTFE O-ring.

Table A-62: Installation Accessories

Code	Description	
AB(1)	ANSI alignment ring (Class 150)	★
AC(1)	ANSI alignment ring (Class 300)	★
AD(1)	ANSI alignment ring (Class 600)	★
DG	DIN alignment ring (PN16)	★
DH	DIN alignment ring (PN40)	★
DJ	DIN alignment ring (PN100)	★
JB	JIS alignment ring (10K)(2)	
JR	JIS alignment ring (20K)	
JS	JIS alignment ring (40K)	

(1) Only required for 10 in. (250 mm) and 12 in. (300 mm) line sizes.
(2) Not available on 12 in. (300 mm) line size.

Table A-63: Remote Adapters

Code	Description	
FE	Flange adapters 316 SST (½ in. NPT)	★

Table A-64: High Temperature Application

Code	Description	
HT	Graphite valve packing (T_{max} = 850 °F [454 °C])	

Table A-65: Flow Calibration

Code	Description	
WC(1)	Flow calibration, 3-point, conditioning orifice option C	

Table A-65: Flow Calibration *(continued)*

Code	Description	
WD[1]	Flow calibration, 10-point, conditioning option C	

(1) Available with primary element technology C only.

Table A-66: Pressure Testing

Code	Description	
P1	Hydrostatic testing with certificate	

Table A-67: Special Cleaning

Code	Description	
P2	Cleaning for special processes	

Table A-68: Special Inspection

Code	Description	
QC1	Visual and dimensional inspection with certificate	★
QC7	Inspection and performance certificate	★

Table A-69: Transmitter Calibration Certification

Code	Description	
Q4	Calibration certificate for transmitter	★

Table A-70: Quality Certification for Safety

Code	Description	
QT	Safety-certified to IEC 61508 with certificate of failure modes, effects, and diagnostic analysis (FMEDA) data	★

Table A-71: Material Traceability Certification

Code	Description	
Q8	Material traceability certification per EN 10204:2004 3.1	★

Table A-72: Positive Material Identification (PMI)

Code	Description	
Q76	PMI verification and certificate	★

Table A-73: Code Conformance

Code	Description	
J2	ANSI/ASME B31.1	
J3	ANSI/ASME B31.3	

Table A-74: Materials Conformance

Code	Description	
J5	Certificate of Compliance to NACE MR0175/ISO 15156 for wetted materials	

Table A-75: Country Certification

Code	Description	
J1	Canadian Registration	
J8	Chinese Certificate of Special Equipment Type Test	

Table A-76: Product Certifications

Code	Description	
E8	ATEX Flameproof and Dust Certification	★
I1[(1)]	ATEX Intrinsic Safety and Dust	★
IA	ATEX FISCO Intrinsic Safety; for FOUNDATION™ Fieldbus or PROFIBUS® PA Protocol only	★
N1	ATEX Type n Certification and Dust	★
K8	ATEX Flameproof, Intrinsic Safety, Type n, Dust (combination of E8, I1, and N1)	★
E5	USA Explosion-proof, Dust Ignition-proof	★
I5[(2)]	USA Intrinsically Safe, Non-incendive	★
K5	USA Explosion-proof, Dust Ignition-proof, Intrinsically Safe, and Division 2	★
E6	Canada Explosion-proof, Dust Ignition-proof, Division 2	★
I6[(3)]	Canada Intrinsic Safety	★
C6	Canada Explosion-proof, Dust Ignition-proof, Intrinsically Safe, and Division 2	★
K6	Canada and ATEX Explosion-proof, Intrinsically Safe, and Division 2 (combination of C6, E8, and I1)	★
E7	IECEx Flameproof, Dust Ignition-proof	★
I7	IECEx Intrinsic Safety	★
N7	IECEx Type n Certification	★
K7	IECEx Flame-proof, Dust Ignition-proof, Intrinsic Safety, and Type n (combination of I7, N7, and E7)	★
E2	Brazil Flameproof	★
I2	Brazil Intrinsic Safety	★
IB	Brazil FISCO Intrinsically Safe; for FOUNDATION Fieldbus or PROFIBUS PA Protocols only	★
K2	Brazil Flameproof, Intrinsic Safety	★
E3	China Flameproof	★
I3	China Intrinsic Safety	★
EP	Republic of Korea Flameproof	★
IP	Republic of Korea Intrinsic Safety	★
EM	Technical Regulations Customs Union (EAC) Flameproof	★
IM	Technical Regulations Customs Union (EAC) Intrinsic Safety	★

Table A-76: Product Certifications *(continued)*

Code	Description	
KM	Technical Regulations Customs Union (EAC) Flameproof and Intrinsic Safety	★
KB	USA and Canada Explosion-proof, Dust Ignition-proof, Intrinsically Safe, and Division 2 (combination of K5 and C6)	★
KD	USA, Canada, and ATEX Explosion-proof, Intrinsically Safe (combination of K5, C6, I1, and E8)	★
KP	Republic of Korea Flameproof and Intrinsic Safety	★

(1) Dust approval not applicable to wireless (output code X).
(2) Non-incendive certification not provided with wireless (output code X).
(3) Only available with wireless output (code X).

Table A-77: Sensor Fill Fluid and O-ring Options

Code	Description	
L1(1)	Inert sensor fill fluid	★
L2	Graphite-filled (PTFE) O-ring	★
LA(1)	Inert sensor fill fluid and graphite-filled (PTFE) O-ring	★

(1) Not available with wireless output (code X).

Table A-78: Shipboard Approvals

Code	Description	
SBS	American Bureau of Shipping	★

Table A-79: Display and Interface Options

Code	Description	
M6(1)	Graphical LCD display	★
M5	LCD display	★
M4(2)	LCD display with Local Operator Interface (LOI)	★

(1) Only available with 4–20 mA HART® output (code A).
(2) Only available with 4–20 mA HART output (code A), low power (code M), and PROFIBUS® PA (code W).

Table A-80: Transient Protection

Code	Description	
T1	Transient terminal block	★

Table A-81: Manifold for Remote-Mount Option

Code	Description	
F2	3-valve manifold, SST	★
F6	5-valve manifold, SST	★

Table A-82: Plantweb™ Control Functionality

Code	Description	
A01	FOUNDATION™ Fieldbus control function block suite	★

Table A-83: Plantweb Diagnostic Functionality

Code	Description	
DA0(1)	Loop Integrity diagnostic	★
DA1(2)	Loop Integrity and Plugged Impulse Line diagnostics	★
D01	FOUNDATION™ Fieldbus Diagnostics Suite	★

(1) Only available with 4–20 mA HART® protocol (code A).
(2) Only available with 4–20 mA HART (code A) and low power (code M) output codes. With low power output code, only the Plugged Impulse Line Diagnostic is included.

Table A-84: Alarm Levels

Code	Description	
C4	NAMUR alarm and saturation levels, high alarm	★
CN	NAMUR alarm and saturation levels, low alarm	★
CR	Custom alarm and saturation signal levels, high alarm (See Rosemount 3051 Configuration Data Sheet)	★
CS	Custom alarm and saturation signal levels, low alarm (See Rosemount 3051 Configuration Data Sheet)	★
CT	Rosemount standard low alarm	★

Table A-85: Ground Screw

Code	Description	
V5	External ground screw assembly(1)	★

(1) The V5 option is not needed with the T1 option; external ground screw assembly is included with the T1 option.

Table A-86: Enhanced Safety

Code	Description	
T9	Enhanced Safety Instrumented Systems (SIS) proof testing and logging(1)	★

(1) Only available with 4–20 mA HART® output (code A).

Table A-87: Configuration Buttons

Code	Description	
D1(1)	Quick service buttons	★
D4(2)	Analog zero and span	★
DZ(3)	Digital zero trim	★

(1) Only available with graphical LCD display (code M6).
(2) Only available with 4–20 mA HART® output (code A).

(3) Only available with 4–20 mA HART output (code A) and wireless output (code X).

Table A-88: Enhanced Software

Code	Description	
RK	Enhanced software	★

Typical model number: `3051CFC D C S 060 N 065 0 3 2 A A 1 WC E5 M5`

A.1.3 Rosemount 2051CFC Compact Flow Meter

The Standard offering represents the most common options. The starred options (★) should be selected for best delivery. The Expanded offering is subject to additional delivery lead time.

Required model components

Table A-89: Model

Code	Description	
2051CFC	Compact flow meter	★

Table A-90: Measurement Type

Code	Description	
D	Differential pressure	★

Table A-91: Primary Element Technology

Code	Description	
C	Conditioning orifice plate	★
P	Orifice plate	★

Table A-92: Material Type

Code	Description	
S	316 SST	★

Table A-93: Line Size

Code	Description	
005(1)	½ in. (15 mm)	★
010(1)	1 in. (25 mm)	★
015(1)	1½ in. (40 mm)	★
020	2 in. (50 mm)	★
030	3 in. (80 mm)	★
040	4 in. (100 mm)	★
060	6 in. (150 mm)	★
080	8 in. (200 mm)	★

Table A-93: Line Size *(continued)*

Code	Description	
100[2]	10 in. (250 mm)	★
120[2]	12 in. (300 mm)	★

(1) Only available with primary element technology P.
(2) For the codes 100 and 120, the alignment ring must be ordered (installation accessories).

Table A-94: Primary Element Type

Code	Description	
N040	0.40 Beta ratio (β)	★
N050	0.50 Beta ratio (β)	★
N065[1]	0.65 Beta ratio (β)	★

(1) For 2 in. (50 mm) line sizes, the primary element type is 0.60 for primary element technology code C.

Table A-95: Temperature Measurement

Code	Description	
0	No temperature sensor	★
R	Remote thermowell and Resistance Temperature Detector (RTD)	

Table A-96: Transmitter Connection Platform

Code	Description	
3	Direct-mount, integral 3-valve manifold	★
7	Remote-mount, NPT connections	★

Table A-97: Differential Pressure Range

Code	Description	
1	0 - 25 inH_2O (0 - 62.16 mbar)	★
2	0 - 250 inH_2O (0 - 621.6 mbar)	★
3	0 - 1,000 inH_2O (0 - 2.49 bar)	★

Table A-98: Transmitter Output

Code	Description	
A[1]	4–20 mA with digital signal based on HART® Protocol	★
F	FOUNDATION™ Fieldbus Protocol	★
W[2]	PROFIBUS® PA Protocol	★
X[3]	Wireless	★

(1) HART Revision 5 is the default HART output. The Rosemount 2051 with Selectable HART can be factory or field configured to HART Revision 7. To order HART Revision 7 factory configured, add option code HR7.

(2) For local addressing and configuration, M4 Local Operator Interface (LOI) is required. Not available with product certification codes EM, IM, KL, KM, and KS.
(3) Only available with intrinsically safe approvals.

Table A-99: Transmitter Housing Material

Code	Description	Conduit entry size	
A	Aluminum	½–14 NPT	★
B	Aluminum	M20 x 1.5	★
J	SST	½–14 NPT	★
K	SST	M20 x 1.5	★
P(1)	Engineered polymer	No conduit entries	★
D(2)	Aluminum	G½	
M(2)	SST	G½	

(1) Only available with output code X.
(2) Transmitter conduit entry will be ½ NPT and a ½ NPT to G½ thread adapter will be provided. This option is only available with product certifications option I1. Housing code D is also available with E4 and IG.

Table A-100: Transmitter Performance Class

Code	Description	
1	Up to ±2.25% flow rate accuracy, 5:1 flow turndown, 2-year stability	★

Wireless options

Requires wireless output (code X) and engineered polymer housing (code P).

Table A-101: Wireless Transmit Rate, Operating Frequency, and Protocol

Code	Description	
WA3	User-configurable transmit rate, 2.4 GHz *Wireless*HART®	★

Table A-102: Antenna and SmartPower™

Code	Description	
WP5	Internal antenna, compatible with Green Power Module(1)	★

(1) Intrinsically Safe (IS) Power Module sold separately.

Additional options

Table A-103: Extended Product Warranty

Code	Description	
WR3	3-year limited warranty	★
WR5	5-year limited warranty	★

Table A-104: Alternate Transmitter Diaphragm Material

Code	Description	
ID2	316L SST	
ID3	Alloy C-276	
ID5(1)(2)	Tantalum	

(1) Available in ranges 2 to 5 only.
(2) Not available with output code X.

Table A-105: Installation Accessories

Code	Description	
AB(1)	ANSI alignment ring (Class 150)	★
AC(1)	ANSI alignment ring (Class 300)	★
AD(1)	ANSI alignment ring (Class 600)	★
DG	DIN alignment ring (PN 16)	★
DH	DIN alignment ring (PN 40)	★
DJ	DIN alignment ring (PN 100)	★
JB	JIS alignment ring (10K)(2)	
JR	JIS alignment ring (20K)	
JS	JIS alignment ring (40K)	

(1) Only required for 10 in. (250 mm) and 12 in. (300 mm) line sizes.
(2) Not available on 12 in. (300 mm) line size.

Table A-106: Remote Adapters

Code	Description	
FE	Flange adapters 316 SST (½-inch NPT)	★

Table A-107: High Temperature Application

Code	Description	
HT	Graphite valve packing (T_{max} = 850 °F [454 °C])	

Table A-108: Flow Calibration

Code	Description	
WC(1)	Flow calibration, 3-point, conditioning orifice option C	
WD(1)	Flow calibration, 10-point, conditioning option C	

(1) Available with primary element technology C only.

Table A-109: Pressure Testing

Code	Description	
P1	Hydrostatic testing with certificate	

Table A-110: Special Cleaning

Code	Description	
P2	Cleaning for special processes	

Table A-111: Transmitter Calibration Certification

Code	Description	
Q4	Calibration certificate for transmitter	★

Table A-112: Quality Certification for Safety

Code	Description	
QT	Safety-certified to IEC 61508 with certificate of failure modes, effects, and diagnostic analysis (FMEDA)(1)	★

(1) The quality certification for safety is only available with HART® 4–20 mA output (code A).

Table A-113: Material Traceability Certification

Code	Description	
Q8	Material traceability certification per EN 10204:2004 3.1	★

Table A-114: Positive Material Identification (PMI)

Code	Description	
Q76	PMI verification and certificate	★

Table A-115: Code Conformance

Code	Description	
J2	ANSI/ASME B31.1	
J3	ANSI/ASME B31.3	

Table A-116: Materials Conformance

Code	Description	
J5	Certificate of Compliance to NACE MR0175/ISO 15156 for wetted materials	

Table A-117: Country Certification

Code	Description	
J1	Canadian Registration	
J8	Chinese Certificate of Special Equipment Type Test	

Table A-118: Product Certifications

Code	Description	
E8	ATEX Flameproof	★
I1(1)	ATEX Intrinsic Safety	★
IA	ATEX FISCO Intrinsic Safety; for FOUNDATION™ Fieldbus or PROFIBUS® PA Protocol only	★

Table A-118: Product Certifications *(continued)*

Code	Description	
N1	ATEX Type n Certification	★
K1	ATEX Flameproof, Intrinsic Safety, Type n, Dust (combination of E8, I1, and N1)	★
E4[(2)]	Japan Flameproof	★
E5	USA Explosion-proof, Dust Ignition-proof	★
I5[(3)]	USA Intrinsically Safe, Non-incendive	★
K5	USA Explosion-proof, Dust Ignition-proof, Intrinsically Safe, and Division 2	★
E6	Canada Explosion-proof, Dust Ignition-proof, Division 2	★
I6	Canada Intrinsic Safety	★
C6	Canada Explosion-proof, Dust Ignition-proof, Intrinsically Safe, and Division 2	★
K6	Canada Explosion-proof, Intrinsically Safe, and Division 2 (combination of E6 and I6)	★
E7	IECEx Flameproof	★
I7	IECEx Intrinsic Safety	★
N7	IECEx Type n Certification	★
K7	IECEx Flameproof, Dust Ignition-proof, Intrinsic Safety, and Type n (combination of I7, N7, and E7)	★
IG	IECEx FISCO Intrinsically Safe; for FOUNDATION Fieldbus or PROFIBUS PA Protocols only	★
E2	Brazil Flameproof	★
I2	Brazil Intrinsic Safety	★
IB	Brazil FISCO Intrinsically Safe; for FOUNDATION Fieldbus or PROFIBUS PA Protocols only	★
K2	Brazil Flameproof, Intrinsic Safety	★
E3	China Flameproof	★
I3	China Intrinsic Safety	★
EM	Technical Regulations Customs Union (EAC) Flameproof	★
IM	Technical Regulations Customs Union (EAC) Intrinsic Safety	★
KM	Technical Regulations Customs Union (EAC) Flameproof and Intrinsic Safety	★
KB	USA and Canada Explosion-proof, Dust Ignition-proof, Intrinsically Safe, and Division 2 (combination of K5 and C6)	★
KD	USA, Canada, and ATEX Explosion-proof, Intrinsically Safe (combination of K5, C6, I1, and E8)	★
KL[(4)]	USA, Canada, IECEx, ATEX Intrinsic Safety Combination	★
KS	USA, Canada, IECEx, ATEX Explosion-proof, Intrinsically Safe, Dust, Non-incendive, Type N, Division 2	★
EP	Republic of Korea Flameproof	★
IP	Republic of Korea Intrinsic Safety	★
KP	Republic of Korea Flameproof, Intrinsic Safety	★

(1) Dust approval not applicable to wireless (output code X). For wireless approvals, see the Certifications section of the Rosemount 3051 Wireless Pressure Transmitters Reference Manual.

(2) Only available with 4–20 mA HART®(output code A), FOUNDATION Fieldbus (output code F), or PROFIBUS PA (output code W). Only available with aluminum housing and ½ NPT conduit entry size (housing material code A).
(3) Non-incendive certification not provided with wireless (output code X).
(4) Only available with wireless (output code X).

Table A-119: Shipboard Approval

Code	Description	
SBS	American Bureau of Shipping(1)	★

(1) Not available with wireless (output code X).

Table A-120: Sensor Fill Fluid and O-ring Options

Code	Description	
L1(1)	Inert sensor fill fluid	★
L2	Graphite-filled (PTFE) O-ring	★
LA(1)	Inert sensor fill fluid and graphite-filled (PTFE) O-ring	★

(1) Not available with output code X.

Table A-121: Display and Interface Options

Code	Description	
M4(1)	LCD display with Local Operator Interface (LOI)	★
M5	LCD display	★

(1) Not available with FOUNDATION™ Fieldbus (output code F) or wireless (output code X).

Table A-122: Transient Protection

Code	Description	
T1	Transient terminal block(1)(2)	★

(1) This option is not available with output code X.
(2) This option is not available with housing code 00, 5A, or 7J. The T1 option is not needed with FISCO Product Certifications; transient protection is included with the FISCO Product Certification code IA.

Table A-123: Manifold for Remote-Mount Option

Code	Description	
F2	3-valve manifold, SST	★
F6	5-valve manifold, SST	★

Table A-124: Alarm Limit

Code	Description	
C4	NAMUR alarm and saturation levels, high alarm	★
CN	NAMUR alarm and saturation levels, low alarm	★

Table A-124: Alarm Limit *(continued)*

Code	Description	
CR	Custom alarm and saturation signal levels, high alarm (requires C1 and Configuration Data Sheet)	★
CS	Custom alarm and saturation signal levels, low alarm (requires C1 and Configuration Data Sheet)	★
CT	Low alarm (standard Rosemount alarm and saturation levels)	★

Table A-125: Plantweb Control Functionality

Code	Description	
A01	FOUNDATION™ Fieldbus advanced control function block suite(1)	★

(1) This option is only valid with FOUNDATION Fieldbus (output code F).

Table A-126: Configuration Buttons

Code	Description	
D4(1)	Zero and span hardware adjustments	★
DZ(2)	Digital zero trim	★

(1) Only available with 4–20 mA HART®(output code A).
(2) Only available with 4–20 mA HART (output code A) and wireless output (code X).

Table A-127: Ground Screw

Code	Description	
V5	External ground screw assembly	★

Table A-128: HART® Revision Configuration

Code	Description	
HR5(1)	Configured for HART Revision 5	★
HR7(2)	Configured for HART Revision 7	★

(1) Configures the HART output to HART Revision 5. The device can be field configured to HART Revision 7 if needed.
(2) Configures the HART output to HART Revision 7. The device can be field configured to HART Revision 5 if needed.

Typical model number: `2051CFC D C S 060 N 065 0 3 2 A A 1 WC E5 M5`

A.1.4 Rosemount 405 Compact Primary Element



Rosemount 405 Compact Primary Element utilizes an easy to install direct-mount primary element assembly.

- Available with Conditioning Orifice Plate Primary Element Technology.
- 405P/C orifice primary elements are based on ASME/ISO corner tap design.
- Available in ½ to 12 in. (15 to 300 mm) line sizes.

The Standard offering represents the most common options. The starred options (★) should be selected for best delivery. The Expanded offering is subject to additional delivery lead time.

Required model components

Table A-129: Model

Code	Description	
405	Compact Primary Element	

Table A-130: Primary Element Technology

Code	Description	
C	Conditioning orifice plate	★
P	Orifice plate	★

Table A-131: Material Type

Code	Description	
S	316 SST	★

Table A-132: Line Size

Code	Description	
005(1)	½ in. (15 mm)	★
010(1)	1 in. (25 mm)	★
015(1)	1½ in. (40 mm)	★
020	2 in. (50 mm)	★
030	3 in. (80 mm)	★
040	4 in. (100 mm)	★
060	6 in. (150 mm)	★
080	8 in. (200 mm)	★
100(2)	10 in. (250 mm)	★

Table A-132: Line Size *(continued)*

Code	Description	
120[2]	12 in. (300 mm)	★

(1) Available with primary element technology P only.
(2) For the 10 in. (250 mm) and 12 in. (300 mm) line size, the alignment ring must be ordered (installation accessories).

Table A-133: Temperature Measurement

Code	Description	
N	No temperature measurement	★

Table A-134: Primary Element Type

Code	Description	
040	0.40 Beta ratio (β)	★
050	0.50 Beta ratio (β)	★
065[1]	0.65 Beta ratio (β)	★

(1) For 2 in. (50 mm) line sizes, the primary element type is 0.6 for primary element technology code C.

Table A-135: Transmitter Connection

Code	Description	
D3	Direct mount	★
R3	Remote mount, NPT connections	★
A3	Traditional, direct mount, 3-valve integral manifold with adapter plate, SST	

Options

Include with selected model number.

Table A-136: Installation Accessories

Code	Description	
A	ANSI alignment ring Class 150	★
C	ANSI alignment ring Class 300	★
D	ANSI alignment ring Class 600	★
G	DIN alignment ring (PN 16)	★
H	DIN alignment ring (PN 40)	★
J	DIN alignment ring (PN 100)	★
B	JIS alignment ring (10K)	
R	JIS alignment ring (20K)	
S	JIS alignment ring (40K)	

Table A-137: Remote Adapters

Code	Description	
E	Flange adapters 316 SST (½ in. NPT)	★

Table A-138: High Temperature Application

Code	Description	
T	Graphite valve packing (T_{max} = 850 °F [454 °C])	

Table A-139: Flow Calibration

Code	Description	
WC(1)	Flow calibration, 3-point, conditioning orifice option C (all pipe schedules)	
WD(1)	Flow calibration, 10-point, conditioning option C (all schedules)	

(1) Available with primary element technology C only.

Table A-140: Pressure Testing

Code	Description	
P1	Hydrostatic testing	

Table A-141: Special Cleaning

Code	Description	
P2	Cleaning for special processes	
PA	Cleaning per ASTM G93 Level D (section 11.4)	

Table A-142: Special Inspection

Code	Description	
QC1	Visual and dimensional inspection with certificate	★
QC7	Inspection and performance certificate	★

Table A-143: Material Traceability Certification

Code	Description	
Q8	Material traceability certification per EN10204:2004 3.1	★

Table A-144: Code Conformance

Code	Description	
J2	ANSI/ASME B31.1	
J3	ANSI/ASME B31.3	
J4	ANSI/ASME B31.8	

Table A-145: Materials Conformance

Code	Description	
J5[(1)]	NACE® MR-0175/ISO 15156	

(1) Materials of construction comply with metallurgical requirements within NACE MR0175/ISO for sour oil field production environments. Environmental limits apply to certain materials. Consult latest standard for details. Selected materials also conform to NACE MR0103 for sour refining environments.

Table A-146: Country Certification

Code	Description	
J1	Canadian Registration	

Typical model number: `405 C S 040 N 040 D3`

A.2 Specifications

A.2.1 Rosemount 3051SF specifications

Performance specifications

Performance assumptions include: measured pipe inside diameter (ID), transmitter is trimmed for optimum flow accuracy, and performance is dependent on application parameters.

MultiVariable™ flow performance

Note
Measurement types 2 to 4 assume that the unmeasured variables are constant. Additional uncertainty will depend on the variation in the unmeasured variables. DP calibrated at up to 1/10th full scale to optimize accuracy over range of use.

Note
Range 1 flow meters experience an additional uncertainty up to 0.9%. Consult an Emerson representative for exact specifications.

Table A-147: MultiVariable Flow Performance—Flow Reference Accuracy (Measurement Type 1)

Model	Classic MV (8:1 flow turndown)	Ultra-for-Flow (14:1 flow turndown)
3051SFC Compact Orifice Flow Meter - Conditioning option C (3051SFC_C)		
Ranges 2–3		
β = 0.4	±1.10% of flow rate	±0.75% of flow rate
β = 0.50, 0.65	±1.45% of flow rate	±1.15% of flow rate
3051SFC Compact Orifice Flow Meter - Orifice option P (3051SFC_P)[(1)]		
Ranges 2–3	±1.45% of flow rate	±1.30% of flow rate

(1) For line size less than 2 in. (50 mm) or greater than 8 in. (200 mm), add an additional 0.5% uncertainty.

Flow performance

Note
For measurement types 5 to 7, refer to the Reference Accuracy specification for the 3051SMV with measurement type P.

Note
These flow measurement accuracies assume a constant density, viscosity, and expansibility factor.

Note
Range 1 flow meters experience an additional uncertainty up to 0.9%. Consult an Emerson representative for exact specifications.

Table A-148: Flow Performance—Flow Reference Accuracy (Measurement Type D)

Model	Ultra (8:1 flow turndown)	Classic (8:1 flow turndown)	Ultra-for-Flow (14:1 flow turndown)
3051SFC Compact Orifice Flow Meter - Conditioning option C (3051SFC_C)			
Ranges 2–3			
β = 0.4	±0.9% of flow rate	±1.10% of flow rate	±0.75% of flow rate
β = 0.65	±1.25% of flow rate	±1.40% of flow rate	±1.15% of flow rate
3051SFC Compact Orifice Flow Meter - Orifice option P (3051SFC_P)(1)			
Ranges 2–3	±1.35% of flow rate	±1.80% of flow rate	±1.30% of flow rate

(1) For line size less than 2 in. (50 mm) or greater than 8 in. (200 mm), add an additional 0.5% uncertainty.

Dynamic performance

Table A-149: Total Time Response at 75 °F (24 °C), includes Dead Time

Note
For FOUNDATION™ Fieldbus (output code F), add 52 ms to stated values (not including segment macro-cycle). For option code DA2, add 45 ms (nominal) to stated values.

3051SF_D	3051SF_1, 2, 5, or 6	3051SF_3, 4, or 7
DP ranges 2–5: 100 ms Range 1: 255 ms Range 0: 700 ms	DP range 1: 310 ms DP range 2: 170 ms DP range 3: 155 ms AP and GP: 240 ms	DP ranges 2–5: 145 ms DP range 1: 300 ms DP range 0: 745 ms

Table A-150: Dead Time

Note
For option code DA2, dead time is 90 ms (nominal).

3051SF_D	3051SF_1-7
45 ms (nominal)	DP: 100 ms AP and GP: 140 ms RTD interface: 1 s

Table A-151: Sensor Update Rate

Note
Does not apply to wireless (output code X). See Wireless self-organizing networks for wireless update rate.

3051SF_D	3051SF_1-7	
22 updates per second	DP: 22 updates per second AP and GP: 11 updates per second RTD interface: 1 update per second	Calculated variables: Mass/volumetric flow rate: 22 updates per second Energy flow rate: 22 updates per second Totalized flow: 1 update per second

Mounting position effects

Models		Ultra, Ultra-for-Flow, Classic, and Classic MV
3051SF_3, 4, 7, or D		Zero shifts up to ±1.25 inH_2O (3.11 mbar), which can be zeroed span: no effect
3051SF_1, 2, 5, or 6	DP Sensor	Zero shifts up to ±1.25 inH_2O (3.11 mbar), which can be zeroed span: no effect
	GP/AP Sensor	Zero shifts to ±2.5 inH_2O (6.22 mbar), which can be zeroed span: no effect

Vibration effect for Rosemount 3051SFC

Less than ±0.1% of URL when tested per the requirements of IEC60770-1 field with general application or pipeline with low vibration level (10 to 1,000 Hz test frequency range, 0.15 mm displacement peak amplitude, 20 m/s^2 acceleration amplitude).

Power supply effect

Less than ±0.005% of calibrated span per volt change in voltage at the transmitter terminals.

Electromagnetic compatibility (EMC)

Meets all relevant requirements of EN 61326 and NAMUR NE-21.[4][5]

Transient protection (option T1)

Meets IEEE C62.41.2-2002, Location Category B

- 6 kV crest (0.5 µs – 100 kHz)
- 3 kA crest (8 × 20 µs)
- 6 kV crest (1.2 × 50 µs)
- Meets IEEE C37.90.1-2002 Surge Withstand Capability
- SWC 2.5 kV crest, 1.0 MHz wave form

(4) NAMUR NE-21 does not apply to wireless output code X.
(5) 3051SMV and 3051SF_1, 2, 3, 4, 5, 6, and 7 requires shielded cable for both temperature and loop wiring.

Functional specifications

Range and sensor limits

Table A-152: Flow Meter with Coplanar Sensor Module

Range	DP Sensor (3051SF_3, 4, or 7)	
	Lower (LRL)	**Upper (URL)**
1	0 inH_2O (0 mbar)	25 inH_2O (62.16 mbar)
2	0 inH_2O (0 bar)	250 inH_2O (621.60 mbar)
3	0 inH_2O (0 bar)	1,000 inH_2O (2.49 bar)

Table A-153: Flow Meter with MultiVariable™ Sensor Module

Range	DP Sensor (3051SF 1, 2, 5, or 6)	
	Lower (LRL)	**Upper (URL)**
1	0 inH_2O (0 mbar)	25 inH_2O (62.3 mbar)
2	0 inH_2O (0 bar)	250 inH_2O (0.62 bar)
3	0 inH_2O (0 bar)	1,000 inH_2O (2.49 bar)
Range	**Static Pressure Sensor (GP/AP)**	
	Lower (LRL)	**Upper (URL)(1)**
3	GP(2): –14.2 psig (0.98 bar) AP: 0.5 psia (34.5 mbar)	GP: 800 psig (55.16 bar) AP: 800 psia (55.16 bar)
4	GP(2): –14.2 psig (0.98 bar) AP: 0.5 psia (34.5 mbar)	GP: 3,626 psig (250 bar) AP: 3,626 psia (250 bar)

(1) For SP range 4 with DP range 1, the URL is 2,000 psi (137.9 bar).
(2) Inert fill: minimum pressure = 1.5 psia (0.10 bar) or –13.2 psig (–0.91 bar).

Table A-154: Process Temperature RTD Interface (3051SF_1, 3, 5 or 7)

Note
Transmitter is compatible with any Pt 100 RTD sensor. Examples of compatible RTDs include Rosemount Series 68 and 78 RTD Temperature Sensors.

Lower (LRL)	Upper (URL)
–328 °F (–200 °C)	1562 °F (850 °C)

Minimum span limits

Table A-155: Transmitter with Coplanar Sensor Module (Single Variable)

Range	DP Sensor (3051SF_D, 3, 4 or 7)	
	Ultra and Ultra-for-Flow	**Classic**
1	0.5 inH_2O (1.24 mbar)	0.5 inH_2O (1.24 mbar)
2	1.3 inH_2O (3.11 mbar)	2.5 inH_2O (6.23 mbar)
3	5.0 inH_2O (12.4 mbar)	10.0 inH_2O (24.9 mbar)

Table A-156: Transmitter with MultiVariable Sensor Module

Range	DP Sensor (3051SF_1, 2, 5, or 6)	
	Ultra-for-Flow	**Classic MV**
1	0.5 inH_2O (1.24 mbar)	0.5 inH_2O (1.24 mbar)
2	1.3 inH_2O (3.11 mbar)	2.5 inH_2O (6.23 mbar)
3	5.0 inH_2O (12.4 mbar)	10.0 inH_2O (24.9 mbar)
Range	**Static Pressure Sensor (GP/AP)**	
	Ultra-for-Flow	**Classic MV**
3	4.0 psi (276 mbar)	8.0 psi (522 mbar)
4	18.13 psi (1.25 bar)	36.26 psi (2.50 bar)

Process temperature RTD interface (3051SF_1, 3, 5 or 7)

Minimum span = 50 °F (28 °C)

Service

3051SF_5, 6, 7, or D (Direct Process Variable Output):

Liquid, gas, and steam applications

3051SF_1, 2, 3, or 4 (Mass and Energy Flow Output):

Some fluid types are only supported by certain measurement types.

Table A-157: Fluid Compatibility with Pressure and Temperature Compensation

• Available

— Not available

Ordering Code	Measurement Type	Fluid Types			
		Liquids	**Saturated Steam**	**Superheated Steam**	**Gas and Natural Gas**
1	DP/P/T (full compensation)	•	•	•	•
2	DP/P	•	•	•	•
3	DP/T	•	•	—	—
4	DP only	•	•	—	—

4–20 mA HART® protocol

Zero and span adjustment	Zero and span values can be set anywhere within the range. Span must be greater than or equal to the minimum span.
Output	2-wire 4–20 mA is user-selectable for linear or square root output. Digital process variable superimposed on 4–20 mA signal, available to any host that conforms to the HART protocol.

Power supply

External power supply required.

- 3051SF_D: 10.5 to 42.4 Vdc with no load
- 3051SF_D with Advanced HART Diagnostics Suite: 12 to 42.4 Vdc with no load
- 3051SF_1–7: 12 to 42.4 Vdc with no load

Load limitations

Maximum loop resistance is determined by the voltage level of the external power supply, as described by:

Figure A-1: Rosemount 3051SF_D

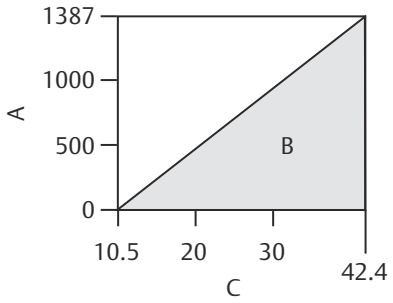

A. Load (ohms)
B. Operating region
C. Voltage (Vdc)

Maximum Loop Resistance = 43.5 × (Power Supply Voltage – 10.5)

The Field Communicator requires a minimum loop resistance of 250 Ω for communication.

Figure A-2: Rosemount 3051SF_1-7 and 3051SF_D with HART Diagnostics (option code DA2)

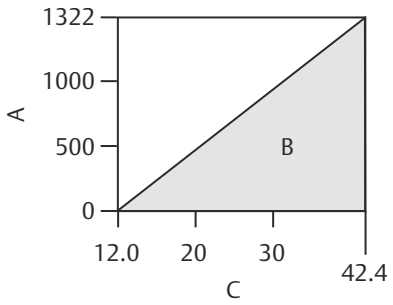

A. Load (ohms)
B. Operating region
C. Voltage (Vdc)

Maximum Loop Resistance = 43.5 × (Power Supply Voltage – 12.0)

The Field Communicator requires a minimum loop resistance of 250 Ω for communication.

Advanced HART Diagnostics Suite (option code DA2)

The Rosemount 3051SF provides Abnormal Situation Prevention indication for a breakthrough in diagnostic capability. The 3051SF ASP Diagnostics Suite for HART includes Statistical Process Monitoring (SPM), variable logging with time stamp and advanced process alerts. The enhanced EDDL graphic display provides an intuitive and user-friendly interface to better visualize these diagnostics.

The integral SPM technology calculates the mean and standard deviation of the process variable 22 times per second and makes them available to the user. The 3051SF uses these values and highly flexible configuration options for customization to detect many user-defined or application specific abnormal situations such as detecting plugged impulse lines and fluid composition change. Variable logging with time stamp and advanced process alerts capture valuable process and sensor data to enable quick troubleshooting of application and installation issues.

FOUNDATION™ Fieldbus

Power supply

External power supply required; transmitters operate on 9.0 to 32.0 Vdc transmitter terminal voltage.

Current draw

17.5 mA for all configurations (including LCD display option)

FOUNDATION Fieldbus parameters

Schedule entries	14 (maximum)
Links	30 (maximum)
Virtual Communications Relationships (VCR)	20 (maximum)

Standard function blocks

Resource block — Contains hardware, electronics, and diagnostic information.

Transducer block — Contains actual sensor measurement data including the sensor diagnostics and the ability to trim the pressure sensor or recall factory defaults.

LCD block — Configures the local display.

Two Analog input blocks — Processes the measurements for input into other function blocks. The output value is in engineering or custom units and contains a status indicating measurement quality.

PID block with auto-tune — Contains all logic to perform PID control in the field including cascade and feedforward. Auto-tune capability allows for superior tuning for optimized control performance.

Backup Link Active Scheduler (LAS)

The transmitter can function as a Link Active Scheduler if the current link master device fails or is removed from the segment.

Software upgrade in the field

Software for the 3051SF with FOUNDATION Fieldbus is easy to upgrade in the field using the FOUNDATION Fieldbus Common Device Software Download procedure.

PlantWeb™ Alerts

Enable the full power of the PlantWeb digital architecture by diagnosing instrumentation issues, communicating advisory, maintenance, and failure details, and recommending a solution.

Advanced control function block suite (option code A01)

Input selector block
Selects between inputs and generates an output using specific selection strategies such as minimum, maximum, midpoint, average, or first "good".

Arithmetic block
Provides pre-defined application-based equations including flow with partial density compensation, electronic remote seals, hydrostatic tank gauging, ratio control, and others.

Signal characterizer block
Characterizes or approximates any function that defines an input/output relationship by configuring up to twenty X, Y coordinates. The block interpolates an output value for a given input value using the curve defined by the configured coordinates.

Integrator block
Compares the integrated or accumulated value from one or two variables to pre-trip and trip limits and generates discrete output signals when the limits are reached. This block is useful for calculating total flow, total mass, or volume over time.

Output splitter block
Splits the output of one PID or other control block so that the PID will control two valves or other actuators.

Control selector block
Selects one of up to three inputs (highest, middle, or lowest) that are normally connected to the outputs of PID or other control function blocks.

Block	Execution time
Resource	N/A
Transducer	N/A
LCD block	N/A
Analog input 1, 2	20 milliseconds
PID with auto-tune	35 milliseconds
Input selector	20 milliseconds
Arithmetic	20 milliseconds
Signal characterizer	20 milliseconds
Integrator	20 milliseconds
Output splitter	20 milliseconds
Control selector	20 milliseconds

Fully compensated mass flow block (option code H01)
Calculates fully compensated mass flow based on differential pressure with external process pressure and temperature measurements over the fieldbus segment. Configuration for the mass flow calculation is easily accomplished using the Rosemount Engineering Assistant.

ASP Diagnostics Suite for FOUNDATION Fieldbus (option code D01)

The Rosemount 3051SF ASP Diagnostics Suite for FOUNDATION Fieldbus provides Abnormal Situation Prevention indication and enhanced EDDL graphic displays for easy visual analysis.

The integral Statistical Process Monitoring (SPM) technology calculates the mean and standard deviation of the process variable 22 times per second and makes them available to the user. The 3051SF uses these values and highly flexible configuration options for customization to detect many user-defined or application specific abnormal situations such as detecting plugged impulse lines and fluid composition change.

Wireless self-organizing networks

Output *Wireless*HART®, 2.4 GHz DSSS

Local display The optional 5-digit LCD display can display user-selectable information such as primary variable in engineering units, percent of range, sensor module temperature, and electronics temperature. Display updates at up to once per minute.

Update rate *Wireless*HART, user-selectable 8 seconds to 60 minutes

Power module Field-replaceable, keyed connection eliminates the risk of incorrect installation, Intrinsically Safe lithium thionyl chloride ($LiSOCl_2$) power module with polybutadine terephthalate (PBT) enclosure. 10-year life at 1 minute update rate(6).

Overpressure limits

Transmitters withstand the following limits without damage:

Table A-158: Coplanar Sensor Module (Single Variable)

Range	DP(1)
	3051SF_3, 4, 7, or D
1	2,000 psi (137.9 bar)
2	3,626 psi (250.0 bar)
3	3,626 psi (250.0 bar)

(1) The overpressure limit of a DP Sensor with the P9 option is 4,500 psig (310.3 bar). The overpressure limit of a DP Sensor with the P0 option is 6,092 psig (420 bar).

Table A-159: Coplanar MultiVariable Sensor Module (3051SF_1, 2, 5, or 6)

Static pressure	Differential pressure		
	Range 1	**Range 2**	**Range 3**
Range 3 GP/AP	1,600 psi (110.3 bar)	1,600 psi (110.3 bar)	1,600 psi (110.3 bar)
Range 4 GP/AP	2,000 psi (137.9 bar)	3,626 psi (250.0 bar)	3,626 psi (250.0 bar)

(6) Reference conditions are 70 °F (21 °C), and routing data for three additional network devices. Note: Continuous exposure to ambient temperature limits of –40 °F or 185 °F (–40 °C or 85 °C) may reduce specified life by less than 20 percent.

Static pressure limits

Coplanar sensor module

Operates within specifications between static line pressures of:

Range	DP Sensor[1]
	3051SF_3, 4, 7, or D
1	0.5 psia to 2,000 psig (0.03 to 137.9 bar)
2	0.5 psia to 3,626 psig (0.03 to 150 bar)
3	0.5 psia to 3,626 psig (0.03 to 150 bar)

(1) The static pressure limit of a DP Sensor with the P9 option is 4,500 psig (310.3 bar). The static pressure limit of a DP Sensor with the P0 option is 6,092 psig (420 bar).

Coplanar MultiVariable Sensor Module (3051SF_1, 2, 5, or 6)

Operates within specifications between static line pressures of 0.5 psia (0.03 bar) and the values in the table below:

Static pressure	Differential pressure		
	Range 1	**Range 2**	**Range 3**
Range 3 GP/AP	800 psi (57.91 bar)	800 psi (57.91 bar)	800 psi (57.91 bar)
Range 4 GP/AP	2,000 psi (137.9 bar)	3,626 psi (250 bar)	3,626 psi (250 bar)

Burst pressure limits

Coplanar Sensor Module

10,000 psig (689.5 bar)

Temperature limits

Ambient

–40 to 185 °F (–40 to 85 °C)

With LCD display[7]: –40 to 175 °F (–40 to 80 °C)

With option code P0: –20 to 185 °F (–29 to 85 °C)

Storage

–50 to 185 °F (–46 to 85 °C)

With LCD display: –40 to 185 °F (–40 to 85 °C)

With wireless output: –40 to 185 °F (–40 to 85 °C)

Process temperature limits

For 3051SFC temperature limits, see Process temperature limits.

Humidity limits

0–100% relative humidity

(7) LCD display may not be readable and LCD updates will be slower at temperatures below –4 °F (–20 °C).

Turn-on time

Note
Does not apply to wireless option code X.

When power is applied to the transmitter during startup, performance will be within specifications per the time period described below:

Transmitter	Turn-on time (typical)
3051S, 3051SF_D	2 seconds
Diagnostics	5 seconds
3051SMV, 3051SF_1-7	5 seconds

Volumetric displacement

Less than 0.005 $in.^3$ (0.08 cm^3)

Damping

Note
Does not apply to wireless option code X.

Analog output response time to a step change is user-selectable from 0 to 60 seconds for one time constant. For 3051SF_1-7, each variable can be individually adjusted. Software damping is in addition to sensor module response time.

Failure mode alarm

4–20 mA HART (output option code A)

If self-diagnostics detect a gross transmitter failure, the analog signal will be driven offscale to alert the user. Rosemount standard (default), NAMUR, and custom alarm levels are available (see Table A-160).

High or low alarm signal is software-selectable or hardware-selectable via the optional switch (option D1).

Table A-160: Alarm configuration

	High alarm	Low alarm
Default	≥ 21.75 mA	≤ 3.75 mA
NAMUR compliant(1)	≥ 22.5 mA	≤ 3.6 mA
Custom levels(2)	20.2 to 23.0 mA	3.4 to 3.8 mA

(1) Analog output levels are compliant with NAMUR recommendation NE 43, see option codes C4 or C5.
(2) Low alarm must be 0.1 mA less than low saturation and high alarm must be 0.1 mA greater than high saturation.

Physical specifications

Safety-certified transmitter failure values

Note
Does not apply to wireless option code X.

Safety accuracy: 2.0%(8)

Safety response time: 1.5 seconds

Electrical connections

½—14 NPT, G½, and M20 × 1.5 conduit. HART® interface connections fixed to terminal block for output code A and X.

Process connections

Coplanar Sensor Module	
Standard	¼—18 NPT on 2⅛ in. centers

Process-wetted parts

For 3051SFC wetted parts, see Physical details.

Process isolating diaphragms

Coplanar Sensor Module
• 316L SST (UNS S31603) • Alloy C-276 (UNS N10276) • Alloy 400 (UNS N04400) • Tantalum (UNS R05440) • Gold-plated Alloy 400 • Gold-plated 316L SST

Drain/vent valves

316 SST, Alloy C-276, or Alloy 400/K-500 material

Drain vent seat: Alloy 400

Drain vent stem: Alloy K-500

Process flanges and adapters

- Plated carbon steel
- SST: CF-8M (Cast 316 SST) per ASTM A743
- Cast C-276: CW-12MW per ASTM A494
- Cast Alloy 400: M-30C per ASTM A494

Non-wetted parts

Electronics housing

Low-copper aluminum alloy or CF-8M (Cast 316 SST)

NEMA® 4X, IP66, IP68 [66 ft. (20 m) for 168 hours]

Note
IP68 is not available with wireless output.

Paint for aluminum housing

Polyurethane

Coplanar sensor module housing

SST: CF-3M (Cast 316L SST)

(8) A 2% variation of the transmitter mA output is allowed before a safety trip. Trip values in the Distributed Control System (DCS) or safety logic solver should be derated by 2%.

Bolts

- Plated carbon steel per ASTM A449, Type 1
- Austenitic 316 SST per ASTM F593
- ASTM A453, Class D, Grade 660 SST
- ASTM A193, Grade B7M alloy steel
- ASTM A193, Class 2, Grade B8M SST
- Alloy K-500

Sensor module fill fluid

Silicone or inert halocarbon

Cover O-rings

Nitirile Butadiene Rubber (NBR)

Wireless antenna

PBT/polycarbonate (PC) integrated omni-directional antenna

Power module

Field replaceable, keyed connection eliminates the risk of incorrect installation, Intrinsically Safe lithium-thionyl chloride power module with PBT enclosure.

Pipe orientation

Pipe orientation for Compact Flow Meters:

D = Direct mount acceptable (recommended)

R = Remote mount acceptable

NR = Not recommended

Orientation/Flow Direction	Process		
	Gas	Liquid	Steam
Horizontal	D/R	D/R	D/R
Vertical Up	R	D/R	R
Vertical Down	D/R	NR	NR

Pipe centering

Improper centering of any orifice type device can cause an error of up to ±5% in small line sizes. A centering mechanism (centering ring) independent of flange rating comes standard with the 405 Compact Series.

Figure A-3: Conditioning Orifice

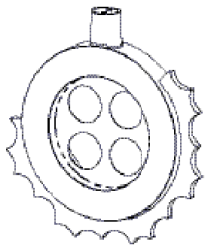

A.2.2 Rosemount 3051CF specifications

Performance specifications

Performance specifications covers both HART®, FOUNDATION™ Fieldbus, and PROFIBUS® PA protocols unless specified. For zero-based spans, reference conditions, silicone oil fill, glass-filled PTFE O-rings, SST materials, coplanar flange (3051C) or ½—14 NPT (3051T) process connections, and digital trim values set to equal range points.

Flow performance

Table A-161: Flow Performance—Flow Reference Accuracy

3051CFC Compact Orifice Flow Meter - Conditioning option C (3051CFC_C)	
Ranges 2–3	
β = 0.4	±1.75% of flow rate at 8:1 flow turndown
β = 0.50, 0.65	±1.95% of flow rate at 8:1 flow turndown
3051CFC Compact Orifice Flow Meter - Orifice type option P (3051CFC_P)(1)	
Ranges 2–3	±2.00% of flow rate at 8:1 flow turndown

(1) For line size less than 2 in. (50 mm) or greater than 8 in. (200 mm), add an additional 0.5% uncertainty.

Conformance to specification (±3σ [Sigma])

Technology leadership, advanced manufacturing techniques, and statistical process control ensure specification conformance to at least ±3σ.

Total performance

Total performance is based on combined errors of reference accuracy, ambient temperature effect, and static pressure effect.

For ±50 °F (28 °C) temperature changes, up to 1,000 psi (6.9 MPa) line pressure (CD only), from 1:1 to 5:1 rangedown.

Model	Total performance
3051CF Ranges 2–5	±0.15% of span

Long term stability

Model	Long term stability
3051CF Ranges 2–5	±0.2% of URL for 10 years ±50 °F (28 °C) temperature changes and up to 1,000 psi (6.9 MPa) line pressure
3051CF Low/draft range Ranges 0–1	±0.2% of URL for 1 year

Dynamic performance

	4–20 mA HART[1] 1–5 Vdc HART low power	FOUNDATION Fieldbus and PROFIBUS PA protocols[2]
Total response time (T_d + T_c)[3]		
3051CF, Ranges 2–5	100 ms	152 ms
Range 1	255 ms	307 ms
Range 0	700 ms	N/A
Dead time (T_d)	45 ms (nominal)	97 ms
Update rate	22 times per second	22 times per second

(1) Dead time and update rate apply to all models and ranges; analog output only.
(2) Transducer block response time and Analog Input block execution time are not included.
(3) Nominal total response time at 75 °F (24 °C) reference conditions.

Figure A-4: Typical HART Transmitter Response Time

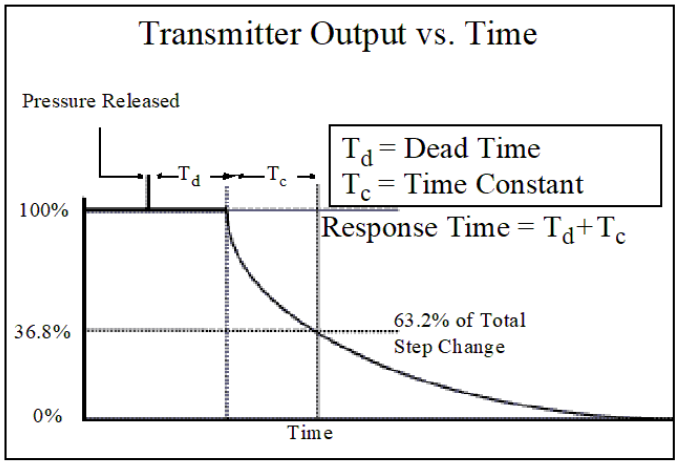

Vibration effect

Less than ±0.1% of URL when tested per the requirements of IEC60770-1 field with general application or pipeline with low vibration level (10 to 1,000 Hz test frequency range, 0.15 mm displacement peak amplitude, 20 m/s^2 acceleration amplitude).

Power supply effect

Less than ±0.005% of calibrated span per volt change.

Electromagnetic Compatibility (EMC)

Meets all relevant requirements of EN 61326 and NAMUR NE-21.

Transient protection (option code T1)

Meets IEEE C62.41, Category Location B

- 6 kV crest (0.5 µs – 100 kHz)
- 3 kV crest (8 × 20 µs)
- 6 kV crest (1.2 × 50 µs)

Note
Calibrations are at 68 °F (20 °C) per ASME Z210.1 (ANSI).

Functional specifications

Range and sensor limits

Table A-162: 3051CF Range and Sensor Limits

Range	Minimum span	Upper (URL)	Lower (LRL)
1	0.50 inH_2O (1.24 mbar)	25 inH_2O (62.16 mbar)	–25 inH_2O (–62.16 mbar)
2	1.67 inH_2O (4.15 mbar)	250 inH_2O (621.60 mbar)	–250 inH_2O (–621.60 bar)
3	6.67 inH_2O (16.58 mbar)	1,000 inH_2O (2.48 bar)	–1,000 inH_2O (–2.48 bar)

4–20 mA HART® (output code A)

Power supply

External power supply required. Standard transmitter (4–20 mA) operates on 10.5 to 42.4 Vdc with no load.

Load limitations

Maximum loop resistance is determined by the voltage level of the external power supply described by:

Maximum Loop Resistance = 43.5 × (Power Supply Voltage – 10.5)

The Field Communicator requires a minimum loop resistance of 250 Ω for communication.

Figure A-5: Rosemount 3051CF

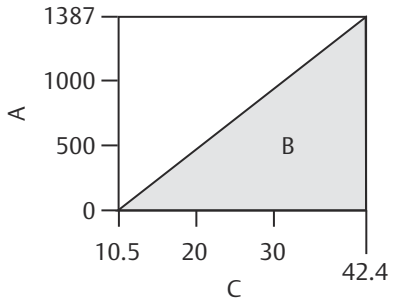

A. Load (ohms)
B. Operating region
C. Voltage (Vdc)

Note
For CSA approval, power supply must not exceed 42.4 V.

Indication

Optional 2-line LCD/LOI display

Optional configuration buttons

Configuration buttons need to be specified:

Digital zero trim (option code DZ) changes digital value of the transmitter and is used for performing a sensor zero trim.

Analog zero span (option code D4) changes analog value and can be used to re-range the transmitter with an applied pressure.

Output

2-wire 4–20 mA, user selectable for linear or square root output. Digital process variable superimposed on 4–20 mA signal, available to any host that conforms to HART protocol. The 3051 comes with selectable HART revisions. Digital communications based on HART revision 5 (default) or revision 7 (option code HR7) protocol can be selected. The HART revision can be switched in the field using any HART-based configuration tool or the optional local operator interface (M4).

Power advisory diagnostics

Power advisory diagnostics pro-actively detect and notify you of degraded electrical loop integrity before it can affect your process operation. Example loop problems that can be detected include water in the terminal compartment, corrosion of terminals, improper grounding, and unstable power supplies.

The Device Dashboard presents the diagnostics in a graphical, task-based interface that provides single-click access to critical process/device information and descriptive graphical troubleshooting.

Local Operator Interface (LOI)

The LOI utilizes a two-button menu with internal and external configuration buttons. Internal buttons are always configured for Local Operator Interface. External buttons can be configured for either LOI (option code M4), Analog Zero and Span (option code D4) or Digital Zero Trim (option code DZ). See Rosemount 3051 Pressure Transmitter Manual for LOI configuration menu.

FOUNDATION™ Fieldbus (output code F)

Power supply

External power supply required; transmitters operate on 9.0 to 32.0 Vdc transmitter terminal voltage. FISCO transmitters operate on 9.0 to 17.5 Vdc.

Current draw

17.5 mA for all configurations (including LCD display option)

Indication

Optional 2-line LCD display

FOUNDATION Fieldbus block execution times

Block	Execution time
Resource	N/A
Sensor and SPM transducer	N/A
LCD display	N/A
Analog input 1, 2	20 milliseconds
PID	25 milliseconds

Block	Execution time
Input selector	20 milliseconds
Arithmetic	20 milliseconds
Signal characterizer	20 milliseconds
Integrator	20 milliseconds
Output splitter	20 milliseconds
Control selector	20 milliseconds

Table A-163: FOUNDATION Fieldbus Parameters

Links	25 (maximum)
Virtual Communications Relationships (VCR)	20 (maximum)

FOUNDATION Fieldbus function blocks (option A01)

Resource block
The resource block contains diagnostic, hardware, and electronics information. There are no linkable inputs or outputs to the resource block.

Sensor transducer block
The sensor transducer block contains sensor information and the ability to calibrate the pressure sensor or recall factory calibration.

LCD transducer block
The LCD transducer block is used to configure the LCD display meter.

Analog input (AI) block
The AI block processes the measurements from the sensor and makes them available to other function blocks. The output value from the AI block is in engineering units and contains a status indicating the quality of the measurement. The AI block is widely used for scaling functionality.

Input selector (ISEL) block
The ISEL block can be used to select the first good, hot backup, maximum, minimum, or average of as many as eight input values and place it at the output. The block supports signal status propagation.

Integrator (INT) block
The INT block integrates one or two variables over time. The block compares the integrated or accumulated value to pre-trip and trip limits and generates discrete output signals when the limits are reached.

The INT block is used as a totalizer. This block will accept up to two inputs, has six options how to totalize the inputs, and two trip outputs.

Arithmetic (ARTH) block
The ARTH block provides the ability to configure a range extension function for a primary input. It can also be used to compute nine different arithmetic functions including flow with partial density compensation, electronic remote seals, hydrostatic tank gauging, ratio control, and others.

Signal characterizer (SGCR) block
The SGCR block characterizes or approximates any function that defines an input/output relationship. The function is defined by configuring as many as twenty X,Y coordinates. The block interpolates an output value for a given input value using the curve defined by the configured coordinates. Two separate analog input signals can be processed simultaneously to give two corresponding separate output values using the same defined curve.

PID block	The PID function block combines all of the necessary logic to perform proportional/integral/derivative (PID) control. The block supports mode control, signal scaling and limiting, feed forward control, override tracking, alarm limit detection, and signal status propagation.
Control selector block	The control selector function block selects one of two or three inputs to be the output. The inputs are normally connected to the outputs of PID or other function blocks. One of the inputs would be considered normal and the other two overrides.
Output splitter block	The output splitter function block provides the capability to drive two control outputs from a single input. It takes the output of one PID or other control block to control two valves or other actuators.
Backup Link Active Scheduler (LAS)	The transmitter can function as a Link Active Scheduler if the current link master device fails or is removed from the segment.

FOUNDATION Fieldbus Diagnostics Suite (option code D01)

The 3051C FOUNDATION Fieldbus Diagnostics Suite features SPM technology to detect changes in the process, process equipment, or installation conditions (such as plugged impulse lines) of the transmitter. This is done by modeling the process noise signature (using the statistical values of mean and standard deviation) under normal conditions and then comparing the baseline values to current values over time. If a significant change in the current values is detected, then the transmitter can generate an alert.

PROFIBUS® PA (output code W)

Profile version

3.02

Power supply

External power supply required; transmitters operate on 9.0 to 32.0 Vdc transmitter terminal voltage.

Current draw

17.5 mA for all configurations (including LCD display option)

Output update rate

Four times per second

Standard function blocks

Analog input (AI block)	The AI function block processes the measurements and makes them available to the host device. The output value from the AI block is in engineering units and contains a status indicating the quality of the measurement.
Physical block	The physical block defines the physical resources of the device including type of memory, hardware, electronics and diagnostic information.
Transducer block	Contains actual sensor measurement data including the sensor diagnostics and the ability to trim the pressure sensor or recall factory defaults.
Indication	Optional 2-line LCD display
Local operator interface	Optional external configuration buttons

Wireless (output code X)

Output

IEC 62591 (*Wireless*HART®), 2.4 GHz DSSS

Wireless radio (Internal Antenna, WP5 option)

- Frequency: 2.400 to 2.485 GHz
- Channels: 15
- Modulation: IEEE 802.15.4 compliant DSSS
- Transmission: Maximum of 10 dBm EIRP

Local display

The optional 3-line, 7-digit LCD display can display user-selectable information such as primary variable in engineering units, scaled variable, percent of range, sensor module temperature, and electronics temperature. The display updates based on the wireless update rate.

Digital zero trim

Digital zero trim (option DZ) is an offset adjustment to compensate for mounting position effects, up to 5% of URL.

Update rate

User selectable 1 second to 60 minutes

Wireless sensor module for in-line transmitters

The 3051 Wireless Transmitter requires the engineered polymer housing to be selected. The standard sensor module will come with aluminum material. If stainless steel is required, the option WSM must be selected.

Power module

Field replaceable, keyed connection eliminates the risk of incorrect installation, Intrinsically Safe Lithium-thionyl chloride Power Module with PBT/PC enclosure. 10-year life at 1 minute update rate.(9)

1–5 Vdc HART low power (output code M)

Output

Three wire 1 to 5 Vdc or 0.8 to 3.2 Vdc (option code C2) user-selectable output. Also user selectable for linear or square root output configuration. Digital process variable superimposed on voltage signal, available to any host conforming to the HART protocol. Low-power transmitter operates on 6 to 12 Vdc with no load.

Power consumption

3.0 mA, 18 to 36 mW

Minimum load impedance

100 kΩ (V_{out} wiring)

Indication

Optional 5-digit LCD display

(9) Reference conditions are 70 °F (21 °C), and routing data for three additional network devices. Note: Continuous exposure to ambient temperature limits of –40 °F or 185 °F (–40 °C or 85 °C) may reduce specified life by less than 20 percent.

Burst pressure limits

3051CF

10,000 psig (69 MPa)

Failure mode alarm

If self-diagnostics detect a sensor or microprocessor failure, the analog signal is driven either high or low to alert the user. High or low failure mode is user-selectable with a jumper on the transmitter. The values to which the transmitter drives its output in failure mode depend on whether it is factory-configured to standard or NAMUR-compliant operation. The values for each are as follows:

Standard operation			
Output code	**Linear output**	**Fail high**	**Fail low**
A	3.9 ≤ I ≤ 20.8	I ≥ 21.75 mA	I ≤ 3.75 mA
M	0.97 ≤ V ≤ 5.2	V ≥ 5.4 V	V ≤ 0.95 V

NAMUR-compliant operation			
Output code	**Linear output**	**Fail high**	**Fail low**
A	3.8 ≤ I ≤ 20.5	I ≥ 22.5 mA	I ≤ 3.6 mA

Low power output

1 to 5 Vdc HART low power (output code M)

Output	3-wire 1 to 5 Vdc (option code C2) user-selectable output. Also user selectable for linear or square root output configuration. Digital process variable superimposed on voltage signal, available to any host conforming to the HART protocol. Low-power transmitter operates on 6 to 12 Vdc with no load.
Power consumption	3.0 mA, 18 to 36 mW
Minimum load impedance	100 kΩ (V_{out} wiring)
Indication	Optional 5-digit LCD display
Output code F, W, and X	If self-diagnostics detect a gross transmitter failure, that information gets passed as a status along with the process variable.

Temperature limits

For 3051CFC temperature limits

Process temperature limits

- **Direct-mount transmitter:**
  - –40 to 450 °F (–40 to 232 °C)
  - Up to 400 °F (204 °C) when top mounted in steam service
- **Remote-mount transmitter:**
  - –148 to 850 °F (–100 to 454 °C) – Stainless Steel

Differential pressure (DP) limits

Maximum differential pressure up to 800 inH_2O (2 bar).

Note
When the temperature is 400 to 850 °F (204 to 454 °C), the DP limit should be 400 inH_2O (1 bar).

Physical specifications

Electrical connections

½—14 NPT, PG 13.5, G½, and M20 × 1.5 (CM20) conduit. HART® interface connections fixed to terminal block.

Process connections

Material of construction

316/316L SST

Orifice plate

- 316/316L SST
- Alloy C-276
- Alloy 400

Body

316 SST (CF8M), material per ASTM A351

Pipe material (if applicable)

A312 Gr 316/316L

Flange

- A182 Gr 316/316L
- Flange pressure limits are per ANSI B16.5
- Flange face finish per ANSI B16.5, 125 to 250 RMS

Body bolts/studs

- ASTM A193 Gr B8M studs
- ASTM A193 Gr B8M Class 2 body studs provided for high temperature option code G

Transmitter connection studs

ASTM A193 Gr B8M studs

Gaskets/O-rings

- Glass-filled PTFE
- Alloy X-750 provided for high temperature option code G
- Gaskets and O-rings must be replaced each time the 3051SFP is disassembled for installation or maintenance.

Orifice type

Square edge–orifice bore sizes	0.066 in. and larger
Quadrant edge–orifice bore sizes [for ½ in. (15 mm) line size only]	• 0.034 in. (0.86 mm) • 0.020 in. (0.51 mm) • 0.014 in. (0.35 mm) • 0.010 in. (0.25 mm)

Note
Integral orifice bodies contain corner tapped pressure ports.

Process-wetted parts

Drain/vent valves

316 SST, Alloy C-276, or Alloy 400 material (Alloy 400 not available with 3051L)

Process flanges and adapters

- Plated carbon steel
- SST cast CF-8M (cast version of 316 SST, material per ASTM-A743)
- C-Type cast Alloy CW12MW
- Cast Alloy M30C

Wetted O-rings

Glass-filled PTFE or Graphite-filled PTFE

Table A-164: Process isolating diaphragms

Isolating diaphragm material	3051CD 3051CG
Alloy C-276	•
Alloy 400	•
Tantalum	•
Gold-plated Alloy 400	•
Gold-plated SST	•

Non-wetted parts

Electronics housing

Low-copper aluminum or CF-8M (Cast version of 316 SST). Enclosure Type 4X, IP65, IP66, IP68

Coplanar sensor module housing

CF-3M (Cast version of 316L SST, material per ASTM-A743)

Bolts

- TM A449, Type 1 (zinc-cobalt plated carbon steel)
- ASTM F593G, Condition CW1 (Austenitic 316 SST)
- ASTM A193, Grade B7M (zinc-plated alloy steel)
- Alloy K-500

Sensor module fill fluid

Silicone oil (D.C. 200)

Paint

Polyurethane

Cover O-rings

Nitirile Butadiene (NBR)

A.2.3 Rosemount 2051CF specifications

Performance specifications

Performance assumptions include: measured pipe inside diameter (ID), transmitter is trimmed for optimum flow accuracy, and performance is dependent on application parameters.

Note
Range 1 flow meters may experience an additional uncertainty up to 0.9%. Consult an Emerson representative for exact specifications.

Flow performance

Table A-165: Flow Performance—Flow Reference Accuracy

2051CFC Compact Orifice Flow Meter - Conditioning option C		
Ranges 2–3	β = 0.4	±2.25% of flow rate at 5:1 flow turndown
	β = 0.50, 0.65	±2.45% of flow rate at 5:1 flow turndown
2051CFC Compact Orifice Flow Meter - Orifice option P(1)		
Ranges 2–3	β = 0.4	±2.50% of flow rate at 5:1 flow turndown
	β = 0.50, 0.65	±2.50% of flow rate at 5:1 flow turndown

(1) For smaller line sizes, see Rosemount Compact Orifice.

Functional specifications

Range and sensor limits

Table A-166: Range and Sensor Limits

Range	2051CF minimum span	Range and sensor limits
1	0.5 inH_2O (1.24 mbar)	0 to 25 inH_2O (62.16 mbar)
2	2.5 inH_2O (4.14 mbar)	0 to 250 inH_2O (0.62 bar)
3	6.67 inH_2O (16.58 mbar)	0 to 1,000 inH_2O (2.49 bar)

Service

Liquid, gas, and steam applications

4–20 mA HART® (output code A)

Output 2-wire 4–20 mA, user selectable for linear or square root output. Digital process variable superimposed on 4–20 mA signal, available to any host that conforms to the HART protocol.

Power supply External power supply required. Standard transmitter operates on 10.5 to 42.4 Vdc with no load.

Turn-on time Performance within specifications less than 2.0 seconds after power is applied to the transmitter.

Load limitations

Maximum loop resistance is determined by the voltage level of the external power supply, as described by:

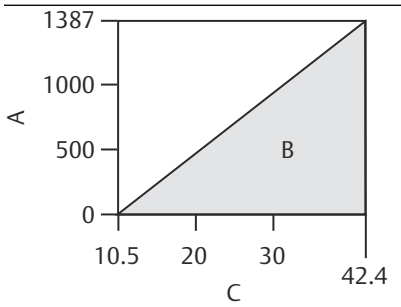

A. Load (ohms)
B. Operating region
C. Voltage (Vdc)

Maximum Loop Resistance = 43.5 × (Power Supply Voltage – 10.5)

The Field Communicator requires a minimum loop resistance of 250 Ω for communication.

FOUNDATION™ Fieldbus (output code F)

Power supply

External power supply required; transmitters operate on 9 to 32 Vdc transmitter terminal voltage for non-intrinsically safe applications, 9.0 to 30 Vdc for entity model intrinsically safe applications and 9.0 to 17.5 Vdc for FISCO intrinsically safe applications.

Current draw

17.5 mA for all configurations (including LCD display option)

Indication

Optional 2-line LCD display

FOUNDATION Fieldbus function block execution times

Block	Execution time
Resource	N/A
Transducer	N/A
LCD display block	N/A
Analog input 1, 2	20 milliseconds
PID	25 milliseconds
Arithmetic	20 milliseconds
Input selection	20 milliseconds
Signal characterizer	20 milliseconds
Integrator	20 milliseconds
Output splitter	20 milliseconds
Control selector	20 milliseconds

Table A-167: FOUNDATION Fieldbus Parameters

Schedule entries	7 (maximum)
Links	25 (maximum)
Virtual Communications Relationships (VCR)	20 (maximum)

Standard function blocks

Resource block The resource block contains diagnostic, hardware and electronics information. There are no linkable inputs or outputs to the resource block.

Sensor transducer block The sensor transducer block contains sensor information including the sensor diagnostics and the ability to trim the pressure sensor or recall factory calibration.

LCD display transducer block The LCD display transducer block is used to configure the LCD display meter.

Analog Input (AI) block The AI block processes the measurements from the sensor and makes them available to other function blocks. The output value from the AI block is in engineering units and contains a status indicating the quality of the measurement. The AI block is widely used for scaling functionality.

Note
The channel, Set XD_Scale, Set L_Type, and sometimes Set Out_Scale are typically configured by instrument personnel. Other AI block parameters, block links, and schedule are typically configured by the control systems configuration engineer.

Input selector (ISEL) block The ISEL block can be used to select the first good, Hot Backup™, maximum, minimum, or average of as many as eight input values and place it at the output. The block supports signal status propagation.

Integrator (INT) block The INT block integrates one or two variables over time. The block compares the integrated or accumulated value to pre-trip and trip limits and generates discrete output signals when the limits are reached.

The INT block is used as a totalizer. This block will accept up to two inputs, has six options how to totalize the inputs, and two trip outputs.

Arithmetic (ARTH) block The ARTH block provides the ability to configure a range extension function for a primary input. It can also be used to compute nine different arithmetic functions including flow with partial density compensation, electronic remote seals, hydrostatic tank gauging, ratio control and others.

Signal characterizer (SGCR) block The SGCR block characterizes or approximates any function that defines an input/output relationship. The function is defined by configuring as many as twenty X, Y coordinates. The block interpolates an output value for a given input value using the curve defined by the configured coordinates. Two separate analog input signals can be processed simultaneously to give two corresponding separate output values using the same defined curve.

PID block	The PID function block combines all of the necessary logic to perform proportional/integral/derivative (PID) control. The block supports mode control, signal scaling and limiting, feed forward control, override tracking, alarm limit detection, and signal status propagation.
Control selector block	The control selector function block selects one of two or three inputs to be the output. The inputs are normally connected to the outputs of PID or other function blocks. One of the inputs would be considered normal and the other two overrides.
Output splitter block	The output splitter function block provides the capability to drive two control outputs from a single input. It takes the output of one PID or other control block to control two valves or other actuators.

Backup Link Active Scheduler (LAS)

The transmitter can function as a LAS if the current link master device fails or is removed from the segment.

PROFIBUS® PA (output code W)

Profile version

3.02

Power supply

External power supply required; transmitters operate on 9.0 to 32.0 Vdc transmitter terminal voltage for non-intrinsically safe applications, 9.0 to 30 Vdc for entity model intrinsically safe applications and 9.0 to 17.5 Vdc for FISCO intrinsically safe applications.

Current draw

17.5 mA for all configurations (including LCD display option)

Output update rate

Four times per second

Standard function blocks

Analog Input (AI) block	The AI function block processes the measurements and makes them available to the host device. The output value from the AI block is in engineering units and contains a status indicating the quality of the measurement.
Physical block	The physical block defines the physical resources of the device including type of memory, hardware, electronics, and diagnostic information.
Transducer block	Contains actual sensor measurement data including the sensor diagnostics and the ability to trim the pressure sensor or recall factory defaults.
Indication	Optional 2-line LCD display
Local Operator Interface (LOI)	Optional external configuration buttons.

Wireless (output code X)

Output

IEC 62591 (*Wireless*HART®), 2.4 GHz DSSS

Wireless radio (Internal Antenna, WP5 option)

- Frequency: 2.400 to 2.485 GHz
- Channels: 15
- Modulation: IEEE 802.15.4 compliant DSSS
- Transmission: Maximum of 10 dBm EIRP

Local display

The optional 3-line, 7-digit LCD display can display user-selectable information such as primary variable in engineering units, scaled variable, percent of range, sensor module temperature, and electronics temperature. The display updates based on the wireless update rate.

Digital zero trim

Digital Zero trim (option DZ) is an offset adjustment to compensate for mounting position effects, up to 5% of URL.

Update rate

User-selectable 1 second to 60 minutes

Wireless sensor module for in-line transmitters

The 2051 Wireless Transmitter requires the engineered polymer housing to be selected. The standard sensor module will come with aluminum material. If stainless steel is required, the option WSM must be selected.

Power module

Field replaceable, keyed connection eliminates the risk of incorrect installation, Intrinsically Safe lithium thionyl chloride power module with PBT/PC enclosure. 10-year life at 1 minute update rate.(10)

(10) Reference conditions are 70 °F (21 °C), and routing data for three additional network devices. Note: Continuous exposure to ambient temperature limits of -40 °F to 185 °F (–40 °C to 85 °C) may reduce specified life by less than 20 percent.

HART 1–5 Vdc low power (output code M)

Output

3-wire 1 to 5 Vdc output, user-selectable for linear or square root output. Digital process variable superimposed on voltage signal, available to any host conforming to the HART protocol.

2051

Digital communications based on HART revision 5 protocol.

2051 with selectable HART

The 2051 with selectable HART comes with selectable HART revisions. Digital communications based on HART revision 5 (default) or revision 7 (option code HR7) protocol can be selected. The HART revision can be switched in the field using any HART based configuration tool or the optional local operator interface (LOI).

Local Operator Interface (LOI)

The LOI utilizes a 2 button menu with internal and external configuration buttons. Internal buttons are always configured for Local Operator Interface. External buttons can be configured for either LOI, (option code M4), Analog Zero and Span (option code D4) or Digital Zero Trim (option code DZ). See Rosemount 2051 Pressure Transmitter Manual for LOI configuration menu.

Power supply

External power supply required. Standard transmitter operates on 9 to 28 Vdc with no load.

Power consumption

3.0 mA, 27 to 84 mW

Output load

100 kΩ or greater (meter input impedance)

Turn-on time

Performance within specifications less than 2.0 seconds after power is applied to the transmitter.

Overpressure limits

Transmitters withstand the following limits without damage:

2051CF Flow Meters

- Ranges 2–5: 3,626 psig (250 bar) 4,500 psig (310.3 bar) for option code P9
- Range 1: 2,000 psig (137.9 bar)

Static pressure limit

- Operates within specifications between static line pressures of –14.2 psig (0.034 bar) and 3,626 psig (250 bar)
- Range 1: 0.5 psia to 2,000 psig (34 mbar and 137.9 bar)

Burst pressure limits

2051CF

- 10,000 psig (689.5 bar)

Temperature limits

For 2051CFC temperature limits:

Process temperature limits

- Direct-mount transmitter:
  - –40 to 450 °F (–40 to 232 °C)
  - Up to 400 °F (204 °C) when top mounted in steam service
- Remote-mount transmitter:
  - –148 to 850 °F (–100 to 454 °C) – Stainless Steel
- Transmitter temperature limits:
  - **Ambient:**(11)
    - –40 to 185 °F (–40 to 85 °C)
      With LCD display(12): –40 to 175 °F (–40 to 80 °C)
  - **Storage:**(11)
    - –50 to 230 °F (–46 to 110 °C)
    - With LCD display: –40 to 185 °F (–40 to 85 °C)

Remote-mount transmitter temperature limits

At atmospheric pressures and above.

2051C	
Silicone fill sensor(1)	–40 to 250 °F (–40 to 121 °C)
Inert fill sensor(1)	–40 to 185 °F (–40 to 85 °C)

(1) Process temperatures above 185 °F (85 °C) require derating the ambient limits by a 1.5:1 ratio.

Humidity limits

0–100% relative humidity

Volumetric displacement

Less than 0.005 in^3 (0.08 cm^3)

Damping

Analog output response to a step input change is user selectable from 0 to 25.6 seconds for one time constant. This software damping is in addition to sensor module response time.

Failure mode alarm

If self-diagnostics detect a sensor or microprocessor failure, the analog signal is driven either high or low to alert the user. High or low failure mode is user-selectable with a jumper on the transmitter. The values to which the transmitter drives its output in failure mode depend on whether it is factory-configured to standard or NAMUR-compliant operation. The values for each are as follows:

Standard operation			
Output code	**Linear output**	**Fail high**	**Fail low**
A	3.9 ≤ I ≤ 20.8	I ≥ 21.75 mA	I ≤ 3.75 mA
M	0.97 ≤ V ≤ 5.2	V ≥ 5.4 V	V ≤ 0.95 V

(11) Limits for silicone fill fluid only.
(12) LCD display may not be readable and LCD display updates will be slower at temperatures below –4 °F (–20 °C).

NAMUR-compliant operation			
Output code	**Linear output**	**Fail high**	**Fail low**
A	3.8 ≤ I ≤ 20.5	I ≥ 22.5 mA	I ≤ 3.6 mA

Output code F

If self-diagnostics detect a gross transmitter failure, that information gets passed as a status along with the process variable.

Table A-168: Long term stability

Models	Standard	Performance option, P8
2051CF Range 1 (CF) Ranges 2–5	±0.2% of URL for 1 year, Reference Stability ±0.1% of URL for 2 years, Operating Stability	±0.125% of URL for 5 years, Operating Stability

Table A-169: Dynamic performance

	4–20 mA HART(1) 1–5 Vdc HART Low Power	FOUNDATION Fieldbus(2)	Typical HART transmitter response time
Total response time (T_d + T_c) (3)			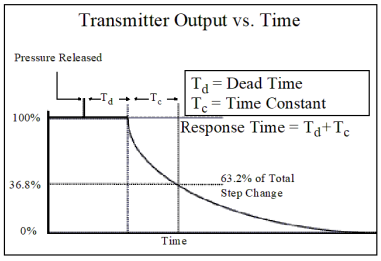
2051CF Range 3–5: Range 1: Range 2:	 115 ms 270 ms 130 ms	 152 ms 307 ms 152 ms	
Dead time (Td)	60 ms (nominal)	97 ms	
Update rate	22 times per second	22 times per second	

(1) Dead time and update rate apply to all models and ranges; analog output only.
(2) Transmitter fieldbus output only, segment macro-cycle not included.
(3) Nominal total response time at 75 °F (24 °C) reference conditions.

Vibration effect for 2051CFC

Less than ±0.1% of URL when tested per the requirements of IEC60770-1 field or pipeline with high vibration level (10 to 60 Hz 0.21 mm displacement peak amplitude, 60 to 2,000 Hz 3g).

Physical specifications

Electrical connections

½—14 NPT, G½, and M20 × 1.5 conduit

2051CF process-wetted parts

For 2051CFC wetted parts

Material of construction

Body/plate	• 316/316L SST • 50 micro-inch Ra surface finish
Manifold head/valves	316 SST
Flange studs and nuts	• Customer-supplied • Available as a spare part.
Transmitter connection studs and nuts	• Studs – A193 Grade B8M • Nuts – A194 Grade 8M
Gasket and O-rings	• Gaskets are customer supplied. • Durlon 8500 fiber gaskets are recommended. Consult an Emerson representative for use with other gaskets. • Available as a spare part.

Note
Gaskets and O-rings should be replaced when the 405 is disassembled.

Process isolating diaphragms	316L SST, Alloy C-276, or Tantalum

Non-wetted parts for 2051CF

Electronics housing

Low-copper aluminum or CF-8M (Cast version of 316 SST). Enclosure Type 4X, IP65, IP66, IP68

Coplanar sensor module housing

CF-3M (Cast version of 316L SST)

Bolts

- ASTM A449, Type 1 (zinc-cobalt plated carbon steel)
- ASTM F593G, Condition CW1 (Austenitic 316 SST)
- ASTM A193, Grade B7M (zinc plated alloy steel)

Sensor module fill fluid

Silicone oil (D.C. 200) or Fluorocarbon oil

Paint

Polyurethane

Cover O-rings

Nitirile Butadiene (NBR)

A.2.4 Rosemount 405 specifications

Performance specifications

Table A-170: 405C Compact Conditioning Orifice Technology

Beta Ratio	Discharge Coefficient Uncertainty
β = 0.40	±0.50%
β = 0.50	±1.00%
β = 0.65(1)	±1.00%

(1) For 0.65 beta and ReD< 10,000, add an additional 0.5% to the Discharge Coefficient Uncertainty.

Table A-171: 405P Compact Orifice Technology

Line Size	Discharge Coefficient Uncertainty
½ in. (15 mm)	±2.25%
1 to 1½ in. (25 to 40 mm)	±1.75%
2 to 12 in. (50 to 300 mm)	±1.25%

Line sizes

- ½ in. (15 mm) – not available for the 405C
- 1 in. (25 mm) – not available for the 405C
- 1½ in. (40 mm) – not available for the 405C
- 2 in. (50 mm)
- 3 in. (80 mm)
- 4 in. (100 mm)
- 6 in. (150 mm)
- 8 in. (200 mm)
- 10 in. (250 mm)
- 12 in. (300 mm)

Sizing

Contact an Emerson representative for assistance. A “Configuration Data Sheet” is required prior to order for application verification.

Functional specifications

Service

- Liquid
- Gas
- Vapor

Process temperature limits

Direct-mount transmitter:

- –40 to 450 °F (–40 to 232 °C)
- Up to 400 °F (204 °C) when top mounted in steam service

Remote-mount transmitter:

- –148 to 850 °F (–100 to 454 °C) – stainless steel

Differential Pressure (DP) limits for primary element technology C and P for all sizes

Table A-172: Maximum Allowable DP

Maximum DP < 400 °F (200 °C)	Maximum DP = 400 to 800 °F (200 to 454 °C)
800 inH_20 (2 bar)	400 inH_20 (1 bar)

Maximum working pressure

Pressure retention per ANSI B16.5 Class 600 or DIN PN100

Vibration effect for 405C and 405P

Qualified per IEC61298-3 (2008) for field with general application or pipeline with low vibration level (10 to 1,000 Hz test frequency range, 0.15 mm displacement peak amplitude, 20 m/s^2 acceleration amplitude).

The weight and length of the transmitter assembly shall not exceed 9.8 lb. (4.45 kg) and 8.60 in. (218.44 mm).

Assembly to a transmitter

Select option code C11 for the Rosemount 3051S Transmitter (or option code S3 for the Rosemount 3051C or 2051C Transmitter) to factory assemble the Rosemount 405 to a Rosemount Pressure Transmitter. If the 405 and transmitter are not factory assembled, they may be shipped separately. For a consolidated shipment, inform the Emerson representative when placing the order.

Physical specifications

Temperature measurement for primary element technology P and C

Integral Resistance Temperature Detector (RTD)(13)

- 100 Ohm platinum RTD temperature sensor assembly (316 SST mineral insulated cable) with ¼ in. NPT connection to wafer side and ½ in. NPT connection to transmitter RTD sensor is separated from process fluid by 1/16 inch and is pressure retaining rated for ANSI Class 600.
- Complies with IEC-751 Class B accuracy
- Meets Intrinsic Safety certification

Remote RTD(14)

- 100 Ohm platinum with ½ in. NPT nipple and union (078 series with Rosemount 644 housing) Model: 0078D21N00A025T32Ex; Connection Head: 00644-4410-0011
- Standard RTD cable is shielded armored cable, length is 12 ft. (3.66 m)
- Remote RTD material is SST Thermowell

(13) Only available with 3051SFC Compact Orifice Flow Meter models.
(14) Only available with 3051SFC, 3051CFC, or 2051CFC Compact Orifice Flow Meter models.

- ½ in. x ½ in. NPT, 316 SST

Physical details

Body	316/316L SST
Manifold head/valves	316 SST
Orifice plate for primary element technologies C and P	50 micro-inch Ra surface finish
Flange studs and nuts	• Customer-supplied • Available as a spare part.
Transmitter connection studs and nuts	• Studs: A193 Grade B8M • Nuts: A194 Grade 8M
Gasket and O-rings	• Gaskets are customer supplied. • Gaskets and O-rings are available as spare parts. **Note** Gaskets and O-rings should be replaced when the 405 is disassembled.

Transmitter connections

Direct-mount:

- Available with Rosemount 3051SMV, 3051S, 3051, and 2051 transmitters, ranges 1, 2, and 3.

Remote-mount:

- Primary element technology C or P are available with ¼ in. NPT (standard) or ½ in. NPT (option code E) connections.

Orifice plate design

Orifice type: Square-edged

Orifice pressure taps: Corner

Alignment rings

Table A-173: Mounts Between the Following Flange Configurations

ASME B16.5 (ANSI)	DIN	JIS
Class 150	PN16 (option code G)	10K (option code B)
Class 300	PN40 (option code H)	20K (option code R)
Class 600	PN100 (option code H)	40K (option code S)

ANSI 150 - Class 600 alignment ring is included as standard when ordering for up to 8 in. (200 mm) line size. For the 10 in. (250 mm) and 12 in. (300 mm) line sizes, the alignment ring must be ordered (Installation Accessories).

Typical orifice hole sizes

For 405C, beta is calculated by: $\beta = d_C$ / Pipe ID[15], where the calculated bore is equal to 2 x typical orifice hole size (dC = 2d). The tables below show the diameter of the typical orifice holes.

Table A-174: β = 0.4

Tolerance = ±0.002 in.

Measurements are in inches (millimeters).

Line Size	405C	405P
½ in. (15 mm)	Not available	0.249 (6.325)
1 in. (25 mm)	Not available	0.420 (10.668)
1½ in. (40 mm)	Not available	0.644 (16.358)
2 in. (50 mm)	0.413 (10.490)	0.827 (21.006)
3 in. (80 mm)	0.614 (15.596)	1.227 (31.166)
4 in. (100 mm)	0.805 (20.447)	1.610 (40.894)
6 in. (150 mm)	1.213 (30.810)	2.426 (61.620)
8 in. (200 mm)	1.596 (40.538)	3.192 (81.077)
10 in. (250 mm)	2.004 (50.902)	4.008 (101.80)
12 in. (300 mm)	2.400 (60.960)	4.800 (121.92)

Table A-175: β = 0.65

Tolerance = ±0.002 in.

Measurements are in inches (millimeters).

Line Size	405C	405P
½ in. (15 mm)	Not available	0.404 (10.262)
1 in. (25 mm)	Not available	0.682 (17.323)
1½ in. (40 mm)	Not available	1.047 (26.594)
2 in. (50 mm)	0.620 (15.748)(1)	1.344 (34.138)
3 in. (80 mm)	0.997 (25.324)	1.994 (50.648)
4 in. (100 mm)	1.308 (33.223)	2.617 (66.472)
6 in. (150 mm)	1.971 (50.063)	3.942 (100.127)
8 in. (200 mm)	2.594 (65.888)	5.188 (131.775)
10 in. (250 mm)	3.257 (82.728)	6.513 (165.43)
12 in. (300 mm)	3.900 (99.060)	7.800 (198.120)

(1) For 2 in. (50 mm) line size, Beta (β) = 0.60.

Table A-176: β = 0.50

Tolerance = ±0.002 in.

Measurements are in inches (millimeters).

Line Size	405C	405P
½ in. (15 mm)	Not available	0.311 (7.899)
1 in. (25 mm)	Not available	0.525 (13.335)

(15) Based on Schedule 40.

Table A-176: β = 0.50 *(continued)*

Line Size	405C	405P
1½ in. (40 mm)	Not available	0.805 (20.447)
2 in. (50 mm)	0.517 (13.125)	1.034 (26.264)
3 in. (80 mm)	0.767 (19.481)	1.534 (38.963)
4 in. (100 mm)	1.007 (25.565)	2.013 (51.130)
6 in. (150 mm)	1.516 (38.512)	3.033 (77.038)
8 in. (200 mm)	1.995 (50.679)	3.991 (101.371)
10 in. (250 mm)	2.505 (63.627)	5.010 (127.254)
12 in. (300 mm)	3.000 (76.200)	6.000 (152.400)

Table A-177: 405 P or C Weight

Measurements are in pounds (kilograms).

Line Size	Direct Mount (D3)	Remote Mount (R3)
½ in. (15 mm)	3.50 (1.73)	7.5 (3.70)
1 in. (25 mm)	4.25 (2.10)	8.25 (4.07)
1½ -in. (40 mm)	4.75 (2.34)	8.75 (4.32)
2 in. (50 mm)	5.00 (2.47)	9.00 (4.44)
3 in. (80 mm)	7.00 (3.45)	11.00 (5.43)
4 in. (100 mm)	9.50 (4.69)	13.50 (6.67)
6 in. (150 mm)	13.00 (6.41)	17.00 (8.40)
8 in. (200 mm)	18.25 (9.00)	22.25 (10.99)
10 in. (250 mm)	23.50 (11.59)	27.50 (13.58)
12 in. (300 mm)	29.50 (14.55)	33.50 (16.54)

A.3 Installation consideration

Straight pipe requirement

Use the appropriate lengths of straight pipe upstream and downstream of the 405 to minimize the effects of moderate flow disturbances in the pipe. Table A-178 and Table A-179 lists recommended lengths of straight pipe per ISO 5167.

Table A-178: 405C Straight Pipe Requirements

Note
Consult an Emerson representative if disturbance is not listed.

	Beta	0.40	0.50	0.65
Upstream (inlet) side of primary	Reducer	2	2	2
	Single 90° bend or tee	2	2	2
	Two or more 90° bends in the same plane	2	2	2
	Two or more 90° bends in different plane	2	2	2

Table A-178: 405C Straight Pipe Requirements *(continued)*

	Beta	0.40	0.50	0.65
	Up to 10° of swirl	2	2	2
	Butterfly valve (75% to 100% open)	2	5	5
Downstream (outlet) side of primary		2	2	2

Table A-179: 405P Straight Pipe Requirements

Note
Consult an Emerson representative if disturbance is not listed.

Note
Recommended lengths represented in pipe diameters per ISO 5167.

Note
Refer to ISO 5167 for recommended lengths when using flow straighteners.

	Beta	0.40	0.50	0.65
Upstream (inlet) side of primary	Reducer	5	8	12
	Single 90° bend or tee	16	22	44
	Two or more 90° bends in the same plane	10	18	44
	Two or more 90° bends in different plane	50	75	60
	Expander	12	20	28
	Ball/gate valve fully open	12	12	18
Downstream (outlet) side of primary		6	6	7

Pipe orientation

D = Direct mount acceptable (recommended)

R = Remote mount acceptable

NR = Not recommended

Orientation/Flow Direction	Process		
	Gas	Liquid	Steam
Horizontal	D/R	D/R	D/R
Vertical Up	R	D/R	R
Vertical Down	D/R	NR	NR

Pipe centering

Improper centering of any orifice type device can cause an error of up to ±5% in small line sizes. A centering mechanism (centering ring) independent of flange rating comes standard with the 405 Compact Orifice Series. The centering ring can be rotated around the wafer to facilitate centering depending on the orientation of the flow meter.

Figure A-6: 405C Conditioning Orifice

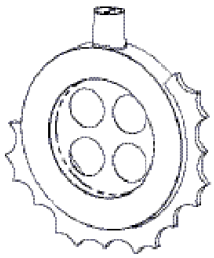

A.4 Dimensional drawings

A.4.1 Rosemount 3051SFC Compact Flow Meter

	Front view	Side view	Top view
Conditioning Flow Meter (primary element type code C and P)	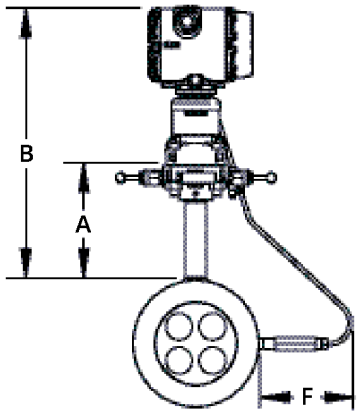	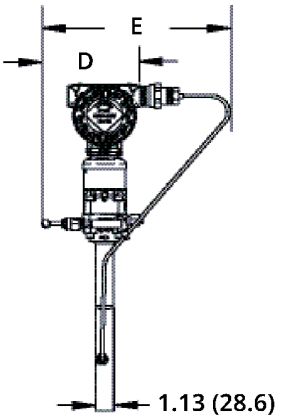	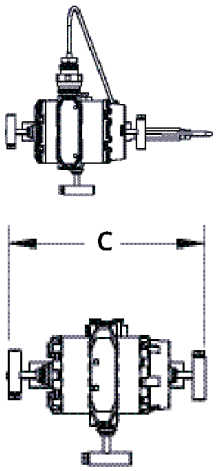
Measurements are in inches (millimeters). Refer to Table A-180 for the dimensional data.			

Table A-180: 3051SFC Compact Dimensional Data

Measurements are in inches (millimeters).

Primary element type	A	B	Transmitter height	C	D	E	F
P and C	5.62 (143)	Transmitter height + A	7.70 (196)	7.75 (197) – closed 8.25 (210) – open	6.00 (152) – closed 6.25 (159) – open	10.2 (257.8) – closed 10.4 (264.2) – open	Max. of 6.7 (71)

A.4.2 Rosemount 3051CFC Compact Flow Meter

	Side view	Front view	Top view
Primary element type code C and P	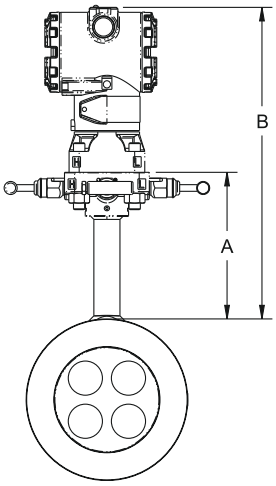	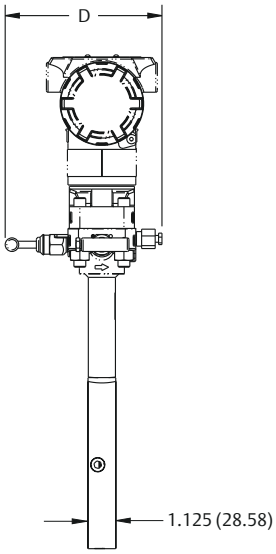	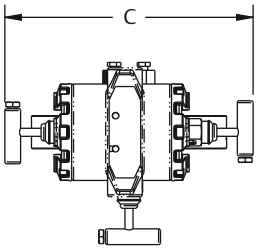
Measurements are in inches (millimeters). Refer to Table A-181 for the dimensional data.			

Table A-181: 3051CFC Compact Dimensional Data

Measurements are in inches (millimeters).

Primary element type	A	B	Transmitter height	C	D
P and C	5.62 (143)	Transmitter height + A	6.55 (166)	7.75 (197) – closed 8.25 (210) – open	6.00 (152) – closed 6.25 (159) – open

A.4.3 Rosemount 2051CFC Compact Flow Meter

Primary element type	Side view	Front view	Top view
Compact Flow Meter (primary element type code C and P)	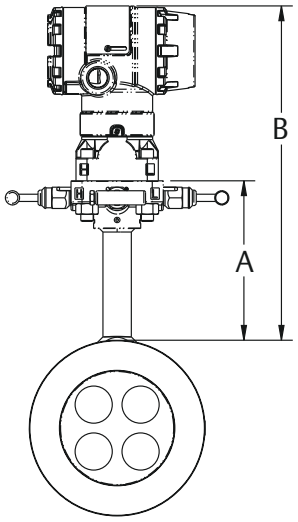	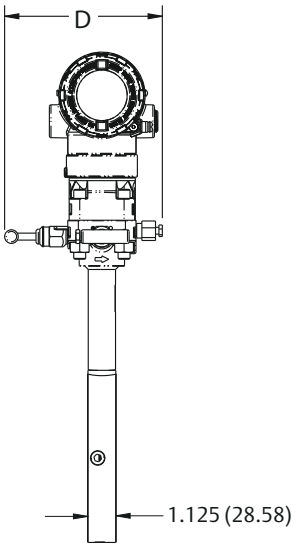	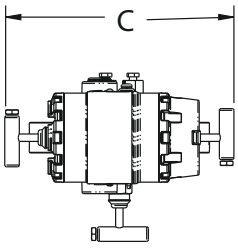
Measurements are in inches (millimeters). Refer to Table A-182 for the dimensional data.			

Table A-182: 2051CFC Compact Dimensional Data

Measurements are in inches (millimeters).

Primary element type	A	B	Transmitter height	C	D
P and C	5.62 (143)	Transmitter height + A	6.20 (157)	7.75 (197) – closed 8.25 (210) – open	6.00 (152) – closed 6.25 (159) – open

A.4.4 Rosemount 405 Compact Orifice Primary Element

Rosemount 405 Compact Orifice Plate (direct-mount transmitter)

Note
Transmitter connection code A3 is to be used with a traditional style transmitter. This is a stainless steel adapter plate for allowing the direct mount of traditional style transmitters.

	Front View (transmitter connection A3)	Front View (transmitter connection D3)
Compact Orifice Plate (primary element type code P)	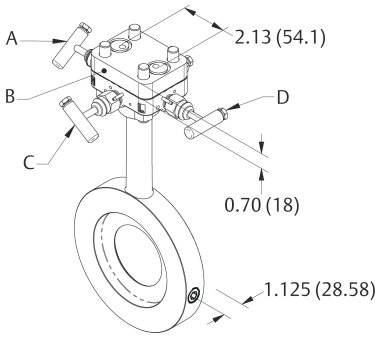	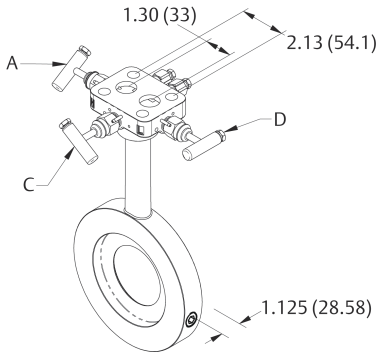
Conditioning Orifice Plate (primary element type code C)	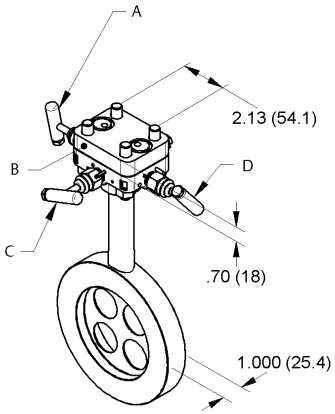	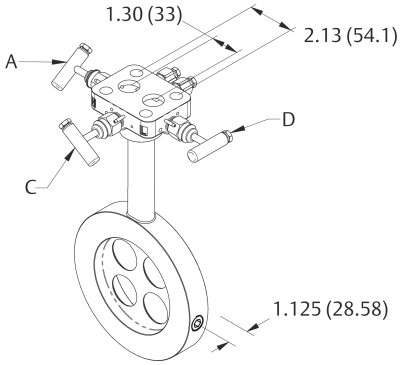
	A High instrument valve **B** Adapter plate	**C** Equalizer valve **D** Low instrument valve
Measurements are in inches (millimeters).		

Rosemount 405 Compact Orifice Plate (remote-mount transmitter)

	Adapter Plate (R3)	Flange Adapter (R3 with option E)
Compact Orifice Plate (primary element type code P)	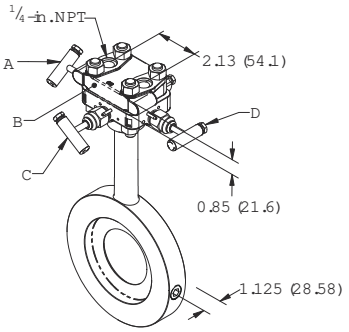	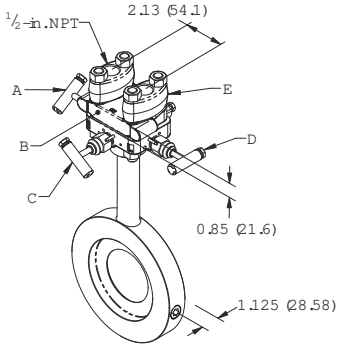
Conditioning Orifice Plate (primary element type code C)	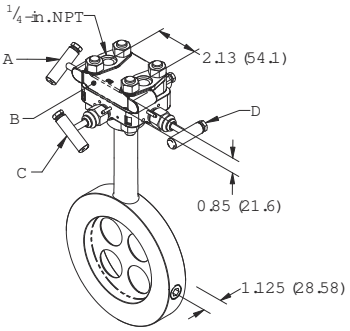	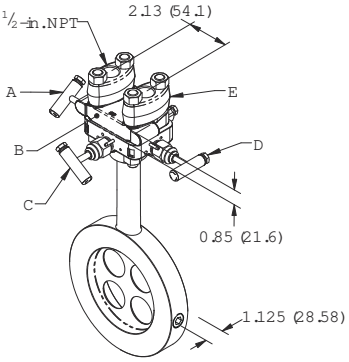
	A High instrument valve **B** Adapter plate **C** Equalizer valve	**D** Low instrument valve **E** Flange adapter
Measurements are in inches (millimeters).		

A.5 Spare parts

Table A-183: Mounting Stud and Nut Kits

Part Number	Part Description
08951-0100-0101	½-inch Class 150 mounting kit
08951-0100-0102	1-inch Class 150 mounting kit
08951-0100-0103	1½-inch Class 150 mounting kit
08951-0100-0104	2-inch Class 150 mounting kit
08951-0100-0105	3-inch Class 150 mounting kit
08951-0100-0106	4-inch Class 150 mounting kit
08951-0100-0107	6-inch Class 150 mounting kit
08951-0100-0108	8-inch Class 150 mounting kit
08951-0100-0109	10-inch Class 150 mounting kit

Table A-183: Mounting Stud and Nut Kits *(continued)*

Part Number	Part Description
08951-0100-0110	12-inch Class 150 mounting kit
08951-0100-0201	½-inch Class 300 mounting kit
08951-0100-0202	1-inch Class 300 mounting kit
08951-0100-0203	1½-inch Class 300 mounting kit
08951-0100-0204	2-inch Class 300 mounting kit
08951-0100-0205	3-inch Class 300 mounting kit
08951-0100-0206	4-inch Class 300 mounting kit
08951-0100-0207	6-inch Class 300 mounting kit
08951-0100-0208	8-inch Class 300 mounting kit
08951-0100-0209	10-inch Class 300 mounting kit
08951-0100-0210	12-inch Class 300 mounting kit
08951-0100-0301	½-inch Class 600 mounting kit
08951-0100-0302	1-inch Class 600 mounting kit
08951-0100-0303	1½-inch Class 600 mounting kit
08951-0100-0304	2-inch Class 600 mounting kit
08951-0100-0305	3-inch Class 600 mounting kit
08951-0100-0306	4-inch Class 600 mounting kit
08951-0100-0307	6-inch Class 600 mounting kit
08951-0100-0308	8-inch Class 600 mounting kit
08951-0100-0309	10-inch Class 600 mounting kit
08951-0100-0310	12-inch Class 600 mounting kit

Table A-184: Gasket Kits

Part Number	Part Description
08951-0200-0101	½-inch Class 150 gasket kit
08951-0200-0102	1-inch Class 150 gasket kit
08951-0200-0103	1½-inch Class 150 gasket kit
08951-0200-0104	2-inch Class 150 gasket kit
08951-0200-0105	3-inch Class 150 gasket kit
08951-0200-0106	4-inch Class 150 gasket kit
08951-0200-0107	6-inch Class 150 gasket kit
08951-0200-0108	8-inch Class 150 gasket kit
08951-0200-0109	10-inch Class 150 gasket kit
08951-0200-0110	12-inch Class 150 gasket kit
08951-0200-0201	½-inch Class 150 gasket kit
08951-0200-0202	1-inch Class 150 gasket kit

Table A-184: Gasket Kits *(continued)*

Part Number	Part Description
08951-0200-0203	1½-inch Class 150 gasket kit
08951-0200-0204	2-inch Class 150 gasket kit
08951-0200-0205	3-inch Class 150 gasket kit
08951-0200-0206	4-inch Class 150 gasket kit
08951-0200-0207	6-inch Class 150 gasket kit
08951-0200-0208	8-inch Class 150 gasket kit
08951-0200-0209	10-inch Class 300 gasket kit
08951-0200-0210	12-inch Class 300 gasket kit
08951-0200-0301	½-inch Class 150 gasket kit
08951-0200-0302	1-inch Class 150 gasket kit
08951-0200-0303	1½-inch Class 150 gasket kit
08951-0200-0304	2-inch Class 150 gasket kit
08951-0200-0305	3-inch Class 150 gasket kit
08951-0200-0306	4-inch Class 150 gasket kit
08951-0200-0307	6-inch Class 150 gasket kit
08951-0200-0308	8-inch Class 150 gasket kit
08951-0200-0309	10-inch Class 600 gasket kit
08951-0200-0310	12-inch Class 600 gasket kit

Table A-185: Remote-Mount Retrofit Kits

Part Number	Part Description
08951-0300-0001	Remote retrofit kit, ¼-in. NPT, 405C/P
08951-0300-0002	Remote retrofit kit, ½-in. NPT, 405C/P

Table A-186: Miscellaneous

Part Number	Part Description
08951-0400-0001	Drain/vent replacement kit
08951-0401-0001	Valve bonnet, SST
08951-0402-0001	Spare ½-inch alignment ring
08951-0402-0002	Spare 1-inch alignment ring
08951-0402-0003	Spare 1½-inch alignment ring
08951-0402-0004	Spare 2-inch alignment ring
08951-0402-0005	Spare 3-inch alignment ring
08951-0402-0006	Spare 4-inch alignment ring
08951-0402-0007	Spare 6-inch alignment ring
08951-0402-0008	Spare 8-inch alignment ring
08951-0402-0030	Spare 10-inch alignment ring Class 150/Class 300

Table A-186: Miscellaneous *(continued)*

Part Number	Part Description
08951-0402-0031	Spare 10-inch alignment ring Class 600
08951-0402-0032	Spare 10-inch alignment ring DN250 PN16
08951-0402-0033	Spare 10-inch alignment ring DN250 PN40
08951-0402-0034	Spare 10-inch alignment ring DN250 PN100
08951-0402-0035	Spare 10-inch alignment ring JIS DN250 (10K/20K/40K)
08951-0402-0036	Spare 10-inch alignment ring JIS DN250 (20K)
08951-0402-0037	Spare 10-inch alignment ring JIS DN250 (40K)
08951-0402-0038	Spare 12-inch alignment ring Class 150/Class 300
08951-0402-0039	Spare 12-inch alignment ring Class 600
08951-0402-0009	Spare ½-inch alignment ring DN15 (PN16/PN40/PN100)
08951-0402-0010	Spare 1-inch alignment ring DN25 (PN16/PN40/PN100)
08951-0402-0011	Spare 1½-inch alignment ring DN40 (PN16/PN40/PN100)
08951-0402-0012	Spare 2-inch alignment ring DN50 (PN16/PN40/PN100)
08951-0402-0013	Spare 3-inch alignment ring DN80 (PN16/PN40/PN100)
08951-0402-0014	Spare 4-inch alignment ring DN100 (PN16/PN40/PN100)
08951-0402-0015	Spare 6-inch alignment ring DN150 (PN16)
08951-0402-0016	Spare 6-inch alignment ring DN150 (PN16/PN40/PN100)
08951-0402-0017	Spare 8-inch alignment ring DN200 (PN16)
08951-0402-0018	Spare 8-inch alignment ring DN200 (PN16/PN40/PN100)
08951-0402-0019	Spare ½-inch alignment ring JIS DN15 (10K/20K/40K)
08951-0402-0020	Spare 1-inch alignment ring JIS DN25 (10K/20K/40K)
08951-0402-0021	Spare 1½-inch alignment ring JIS DN40 (10K/20K/40K)
08951-0402-0022	Spare 2-inch alignment ring JIS DN50 (10K/20K/40K)
08951-0402-0023	Spare 3-inch alignment ring JIS DN80 (10K)
08951-0402-0024	Spare 3-inch alignment ring JIS DN80 (20K/40K)
08951-0402-0025	Spare 4-inch alignment ring JIS DN100 (10K/20K)
08951-0402-0026	Spare 4-inch alignment ring JIS DN100 (40K)
08951-0402-0027	Spare 6-inch alignment ring JIS DN150 (10K)
08951-0402-0028	Spare 6-inch alignment ring JIS DN150 (20K/40K)
08951-0402-0029	Spare 8-inch alignment ring JIS DN200 (10K/20K/40K)
08951-0402-0040	Spare 12-inch alignment ring DN300 PN16
08951-0402-0041	Spare 12-inch alignment ring DN300 PN40
08951-0402-0042	Spare 12-inch alignment ring DN300 PN100
08951-0402-0043	Spare 12-inch alignment ring JIS DN300 (10K)
08951-0402-0044	Spare 12-inch alignment ring JIS DN300 (20K/40K)
08951-0402-0045	Spare 12-inch alignment ring JIS DN300 (40K)

Table A-187: Part Description—Rosemount 3051SFC Flow Meter Spare RTD

Part Number	Part Description
08951-0500-1005	RTD cable assembly (25 in.) for 3051SFC line size 005
08951-0500-1010	RTD cable assembly (25 in.) for 3051SFC line size 010
08951-0500-1015	RTD cable assembly (25 in.) for 3051SFC line size 015
08951-0500-1020	RTD cable assembly (28 in.) for 3051SFC line size 020
08951-0500-1030	RTD cable assembly (28 in.) for 3051SFC line size 030
08951-0500-1040	RTD cable assembly (28 in.) for 3051SFC line size 040
08951-0500-1060	RTD cable assembly (33.5 in.) for 3051SFC line size 060
08951-0500-1080	RTD cable assembly (33.5 in.) for 3051SFC line size 080
08951-0500-1100	RTD cable assembly (36.5 in.) for 3051SFC line size 100
08951-0500-1120	RTD cable assembly (36.5 in.) for 3051SFC line size 120
08951-0500-0005	RTD cable assembly (25 in.) for 3051SFC M20-G½, line size 005
08951-0500-0010	RTD cable assembly (25 in.) for 3051SFC M20-G½, line size 010
08951-0500-0015	RTD cable assembly (25 in.) for 3051SFC M20-G½, line size 015
08951-0500-0020	RTD cable assembly (28 in.) for 3051SFC M20-G½, line size 020
08951-0500-0030	RTD cable assembly (28 in.) for 3051SFC M20-G½, line size 030
08951-0500-0040	RTD cable assembly (28 in.) for 3051SFC M20-G½, line size 040
08951-0500-0060	RTD cable assembly (33.5 in.) for 3051SFC M20-G½, line size 060
08951-0500-0080	RTD cable assembly (33.5 in.) for 3051SFC M20-G½, line size 080
08951-0500-0100	RTD cable assembly (36.5 in.) for 3051SFC M20-G½, line size 100
08951-0500-0120	RTD cable assembly (36.5 in.) for 3051SFC M20-G½, line size 120

B Product certifications

B.1 Rosemount 3051S/3051/2051

For additional information, see the following: Rosemount Pressure Transmitter Reference Manuals:

- Rosemount 3051S MultiVariable™ Transmitter Reference Manual (00809-0100-4803)
- Rosemount 3051 Pressure Transmitter Reference Manual (00809-0100-4007)
- Rosemount 2051 Pressure Transmitter Reference Manual (00809-0100-4107)

00809-0100-4810
Rev. EE
2025

For more information: **Emerson.com/global**

©2025 Emerson. All rights reserved.

Emerson Terms and Conditions of Sale are available upon request. The Emerson logo is a trademark and service mark of Emerson Electric Co. Rosemount is a mark of one of the Emerson family of companies. All other marks are the property of their respective owners.

The "Bluetooth" word mark and logos are registered trademarks owned by Bluetooth SIG, Inc. and any use of such marks by Emerson is under license.

ROSEMOUNT™

EMERSON™