Manual
00809-1400-4975, Rev. AF
July 2026

Rosemount™ 975

Flame Detectors



ROSEMOUNT™

EMERSON™

Legal notice

The device described in this document is the property of Emerson.

No part of the hardware, software, or documentation may be reproduced, transmitted, transcribed, stored in a retrieval system, or translated into any language or computer language, in any form or by any means, without prior written permission of Emerson.

While great efforts have been made to ensure the accuracy and clarity of this document, Emerson assumes no liability resulting from any omissions in this document or from misuse of the information obtained herein. The information in this document has been carefully checked and is believed to be entirely reliable with all of the necessary information included. Emerson reserves the right to make changes to any products described herein to improve reliability, function, or design and reserves the right to revise this document and make changes from time to time in content hereof with no obligation to notify any persons of revisions or changes. Emerson does not assume any liability arising out of the application or any use of any product or circuit described herein; neither does it convey license under its patent rights or the rights of others.

Safety precautions

⚠ WARNING

Follow installation guidelines

Failure to follow these installation guidelines could result in death or serious injury.

Ensure only qualified personnel perform the installation.

⚠ WARNING

Do not open the housing while the power is on.

⚠ WARNING

The tamper void label must remain intact at all times. Any removal, alteration, or damage to the label will void all warranty obligations.

⚠ WARNING

Physical access

Unauthorized personnel may potentially cause significant damage to and/or misconfiguration of end users' equipment. This could be intentional or unintentional and needs to be protected against.

Physical security is an important part of any security program and fundamental in protecting your system. Restrict physical access by unauthorized personnel to protect end users' assets. This is true for all systems used within the facility.

NOTICE

Disconnect external devices, such as fire alarms and automatic extinguishing systems, before performing maintenance.

- Do not expose the detector to radiation of any kind unless required for testing purposes.
- Do not open the electronic compartment. Keep this part closed at all times. It can only be opened in the factory. Opening the electronic component side invalidates the warranty.
- Only access the wiring compartment to wire or remove the detector or access RS-485 terminals for maintenance.

Abbreviations and acronyms

Abbreviation or acronym	Definition
ATEX	Atmospheric explosives
AWG	American wire gauge
BIT	Built-in test
EMC	Electromagnetic compatibility
EOL	End of line
FOV	Field of view
HART®	Highway addressable remote transducer - communication protocol
IAD	Immune at any distance
IECEx	International Electrotechnical Commission Explosion
IPA	Isopropyl alcohol
IR	Infrared
JP5	Type of jet fuel
Latching	Refers to relays remaining in the ON state even after the ON condition has been removed.
LED	Light emitting diode
LPG	Liquified petroleum gas
mA	Milliamps (0.001 amps)
Modbus®	Master-slave messaging structure
N/A	Not applicable
NFPA	National Fire Protection Association
NPT	National pipe thread
RS-485	Communication protocol allowing bi-directional communication
PN	Part number
SIL	Safety integrity level
UNC	Unified coarse thread
Vac	Volts alternating current
Vdc	Volts direct current

Contents

Legal notice 2
Safety precautions 2
Abbreviations and acronyms 3

Chapter 1 Introduction
1.1 Product overview 5
1.2 Models 5

Chapter 2 Installation
2.1 Installation guidelines 7
2.2 Preparation for use 7
2.3 Attach detector to tilt mount 13
2.4 Open the back cover 15
2.5 Wire terminals and ground cable 15
2.6 Install protective cover 20
2.7 Aim the detector 20
2.8 Changing default detector settings 21

Chapter 3 Operation
3.1 Power up the detector 22
3.2 Test flame detectors 22

Chapter 4 Initial setup
4.1 Continuous feature test 23
4.2 Response to fault indication 23
4.3 Built-in test (BIT) 23

Chapter 5 Maintenance
5.1 Keep maintenance records 25
5.2 Clean the detector 25

Chapter 6 Troubleshooting
6.1 Light-emitting diode (LED) is OFF 26
6.2 Light-emitting diode (LED) flashes yellow at 4 Hz 26
6.3 Light-emitting diode (LED) flashes yellow at 4 Hz 26
6.4 Light-emitting diode (LED) constantly red 27
6.5 No HART® communication, 0-20 mA shows 0 mA 27

Chapter 7 Specifications
7.1 Technical specifications 28
7.2 Electrical specifications 31
7.3 Mechanical specifications 32

Appendix A Reference data
A.1 Ordering information, specifications, dimensional drawings, and installation drawings 33
A.2 Product certifications 33

Appendix B Immunity to false alarm sources

Appendix C Wiring instructions
C.1 General instructions for electrical wiring 35

1 Introduction

1.1 Product overview

The Rosemount 975 series is based on proven technologies, including triple infrared (IR3) and ultraviolet infrared (UV/IR). The Rosemount 975 series provides the fastest response to fire, longest distance detection, and revolutionary UV/IR technology, coupled with superior immunity to false alarms, functioning in harsh conditions with unparalleled reliability and durability.

The series is suited to meet the challenges of wide range of industrial and commercial applications with long distance and fast response detection, providing superior protection of high value property and personnel to keep an eye on your safety.

You can easily adapt detection performance to all environments, applications, and requirements, by changing the detector's configuration parameters. Use RS-485-based Modbus® communication or HART® communication to adjust these parameters and perform other maintenance and monitoring tasks.

1.2 Models

The Rosemount 975 Flame Detectors are electro-optical devices designed to identify fire events, enabling alarm activation. The detectors are intended for indoor or outdoor use and can be used stand alone or connected to an alarm or automatic extinguishing system.

The Rosemount 975 series comprises the following detectors:

1.2.1 Rosemount 975MR

The Rosemount 975MR Ultra Fast Multi-Spectrum Triple Infrared (IR3) Flame Detector provides superior, longest distance detection of hydrocarbon fires at up to 300 ft. (90 m), exceptional ultra-fast detection in under 50 msec, and unparalleled reliability. The Rosemount 975MR is based on proven IR3 technology, ensuring highest sensitivity with best immunity to false alarms.

1.2.2 Rosemount 975HR

The Rosemount 975HR Multi-Spectrum IR Flame Detector provides superior, longest distance detection of hydrogen (at up to 165 ft. [50 m]) and hydrocarbon (at up to 300 ft. [90 m]) fires, exceptional ultra-fast detection in under 50 msec, and unparalleled reliability. The Rosemount 975HR is designed to deal with the challenges of invisible fires based on proven triple IR (IR3) technology, ensuring highest sensitivity with best immunity to false alarms.

1.2.3 Rosemount 975UF

The Rosemount 975UF Ultra Fast Ultraviolet (UV)/IR Flame Detector can detect fire in under 20 msec and features a unique dual sensor with selectable UV and IR channels that can be used separately or combined. The detector is designed to detect a range of fires, such as hydrocarbon-based fuel and gas, hydroxyl, hydrogen, metal, and inorganic.

1.2.4 Rosemount 975UR

The Rosemount 975UR Ultra Fast UV/IR Flame Detector can detect fire in under 20 msec and features a unique dual sensor with selectable UV and IR channels that can be used separately or combined. The detector is designed to detect hydrocarbon-based fuel and gas fires.

Table 1-1: Rosemount 975 Series general technical specifications

Spectral response	Infrared and ultraviolet bands
Response time	Varies according to model, typically under 5 seconds
Field of view	Varies according to model, up to 100 degrees
Output	4–20 mA, relays, communication
Enclosure	Stainless steel 316 or aluminum polyurethane painted

Operating voltage	18–32 Vdc
Relay contacts	2A/30 Vdc
Over voltage category	2
Relative humidity	Non-condensing relative humidity up to 100%

Table 1-2: Typical current consumption

Typical current consumption	Rosemount 975MR and 975HR	Rosemount 975UF and 975UR
Normal power consumption without heater	60 mA (1.4 W)	90 mA (2.2 W)
Normal power consumption without heater with alarm	90 mA (2.2 W)	120 mA (2.9 W)
Low power heater with alarm	140 mA (3.4 W)	180 mA (4.3 W)
Standard power mode heater with alarm	280 mA (6.7 W)	320 mA (7.7 W)

NOTICE

If the product is used outside of specified limits, this voids the product certification, and Emerson is not responsible for any incurred warranty expense.

Do not open this product, except for the terminal compartment as listed in this document, under any circumstances.

The detector is not field-repairable. Do not attempt to modify or repair the internal circuits or change their settings, as this will impair the system's performance and void the product warranty.

Opening the attachment screws to dismantle the front part of the detector from remaining parts is restricted and voids the product warranty.

2 Installation

2.1 Installation guidelines

Ensure that installation guidelines align with the National Fire Protection Association (NFPA) 72E or any other local and international regulations and standards, as applicable to flame detectors and installation of Ex-approved products. To ensure optimal performance and efficient installation, consider the following guidelines.

2.1.1 Sensitivity

To determine the level of sensitivity, consider the following:

- size of fire at the required distance to be detected
- type of flammable materials
- proximity to false alarm sources

2.1.2 Wiring

The wire gauge must be designed according to the distance from the detector to the controller and the number of detectors on the same power line.

NOTICE

To fully comply with Electromagnetic Control (EMC) directive and protect against interference caused by radio frequency interference (RFI) and electromagnetic interference (EMI), the cable to the detector must be shielded and the detector must be grounded. The shield should be grounded at the detector end.

2.1.3 Spacing and location

The number of detectors and their locations in the protected area are determined by:

- size of the protected area
- sensitivity of the detectors
- obstructed lines of sight
- cone of view of the detectors

2.1.4 Environment

Dust, snow, or rain can reduce the detector's sensitivity and require more maintenance activities.

The presence of high intensity emission sources may affect sensitivity.

2.2 Preparation for use

The installation sequence may vary according to the physical structure of the site.

Note

Installation steps are also detailed in the *Rosemount 975 Quick Start Guide* supplied with the detector. This quick start guide is also electronically available on Rosemount 975 Flame Detector.

The following tools are required for installation. These are standard tools and are not supplied with the detector.

Table 2-1: Required tools

Tool	Function
Hex key 1.5 mm	Fasten back cover security screw.
Hex key 6 mm	Adjust the tilt mount.

Tool	Function
Hex key 10 mm	Affix the detector to the tilt mount.
Hex key ⅛ in.	Attach protective cover to detector.
Flat screwdriver 6 mm	Connect ground terminal.
Flat screwdriver 2.5 mm	Connect wires to the terminal blocks.
Hex key ⅜ in.	Stop plug ¾-in. NPT.
Open wrench 28 mm	Stop plug M25 only.

2.2.1 Field of view

Note

The field of view at maximal distance corresponds to the angle specification required in EN 54-10. The field of view per FM testing is 50 degrees.

Figure 2-1: Horizontal field of view for Rosemount 975MR

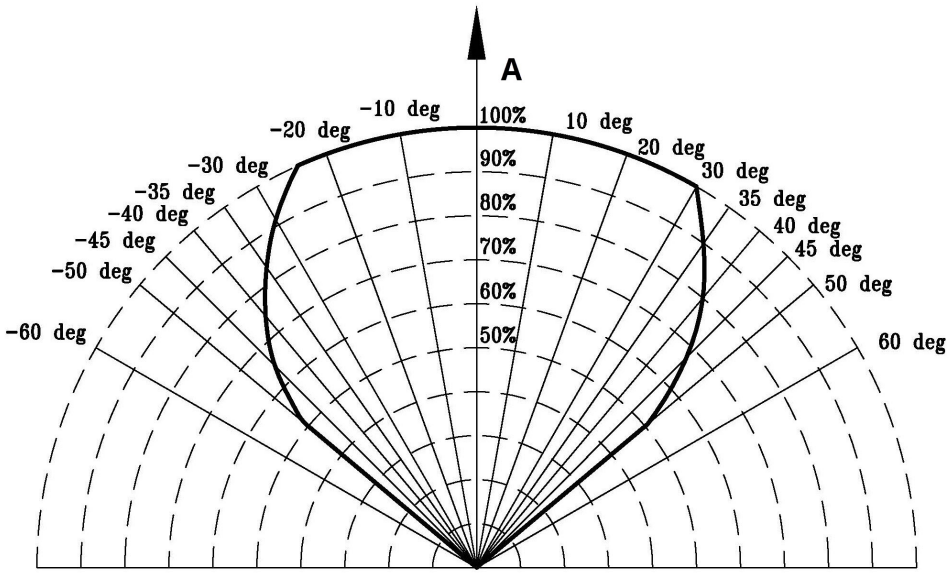

A. Relative range

Figure 2-2: Vertical field of view for Rosemount 975MR

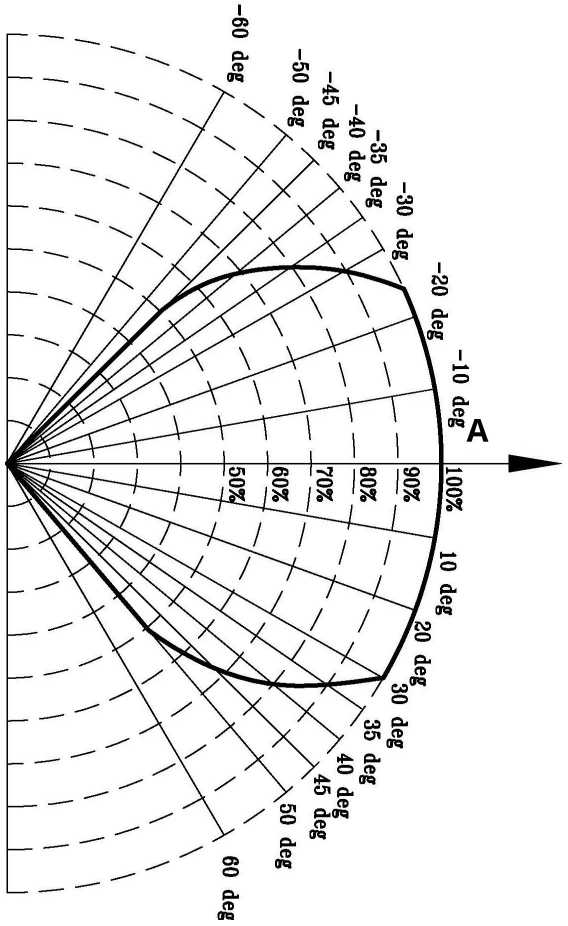

- +50 ° (down)
- -45 ° (up)

A. Relative range

Figure 2-3: Horizontal field of view for Rosemount 975UF and 975UR

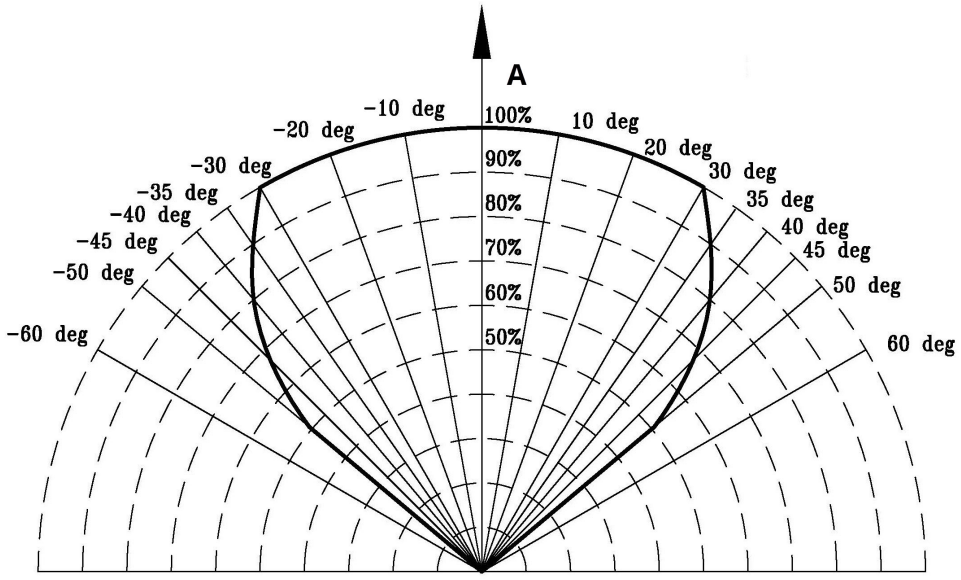

A. Relative range

Figure 2-4: Vertical field of view for Rosemount 975UF and 975UR

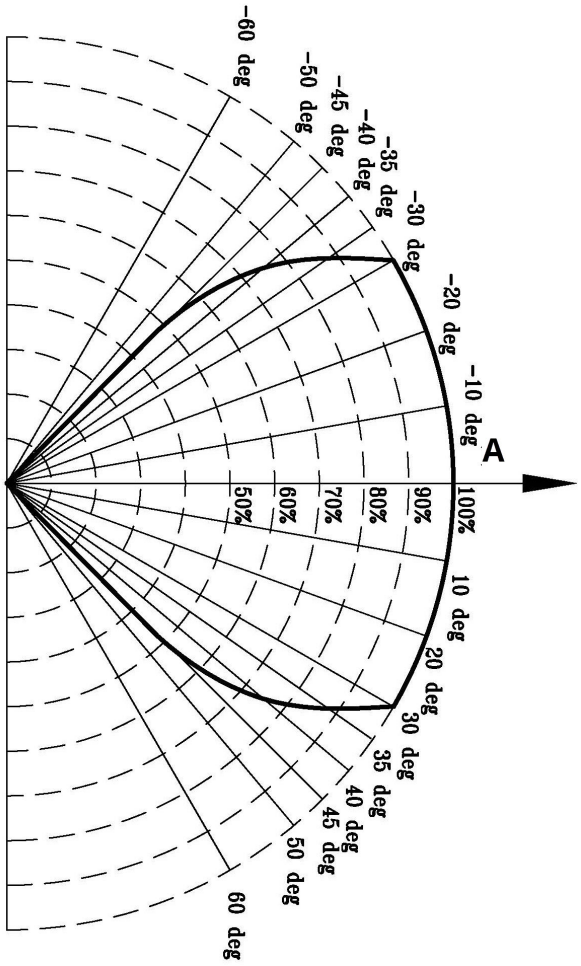

A. Relative range

Gasoline

For Rosemount 975HR.

- Horizontal: 80 °
- Vertical: 80 °

Figure 2-5: Vertical and horizontal field of view for gasoline

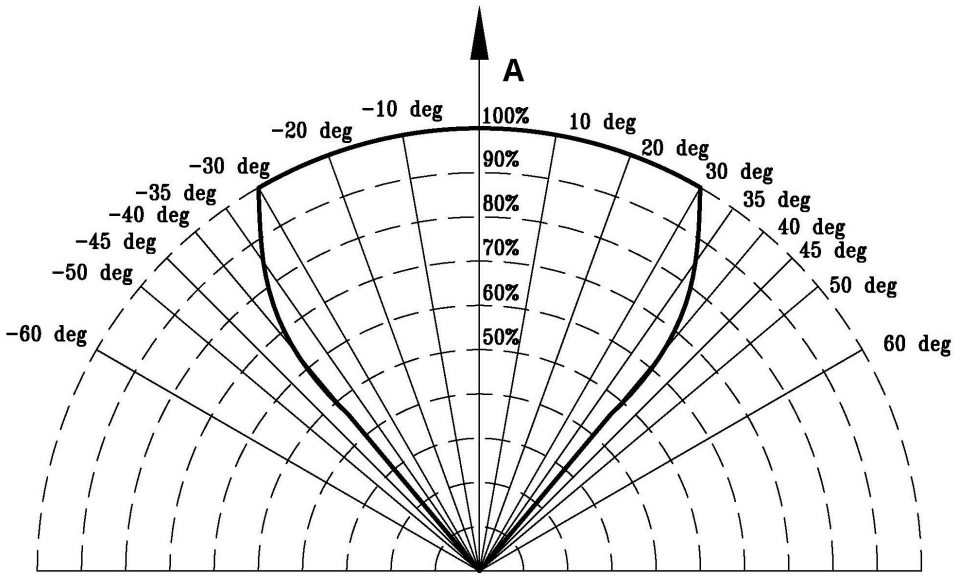

A. Relative range

Hydrogen

For Rosemount 975HR.

- Horizontal: 90°
- Vertical: 90°

Figure 2-6: Horizontal field of view for hydrogen

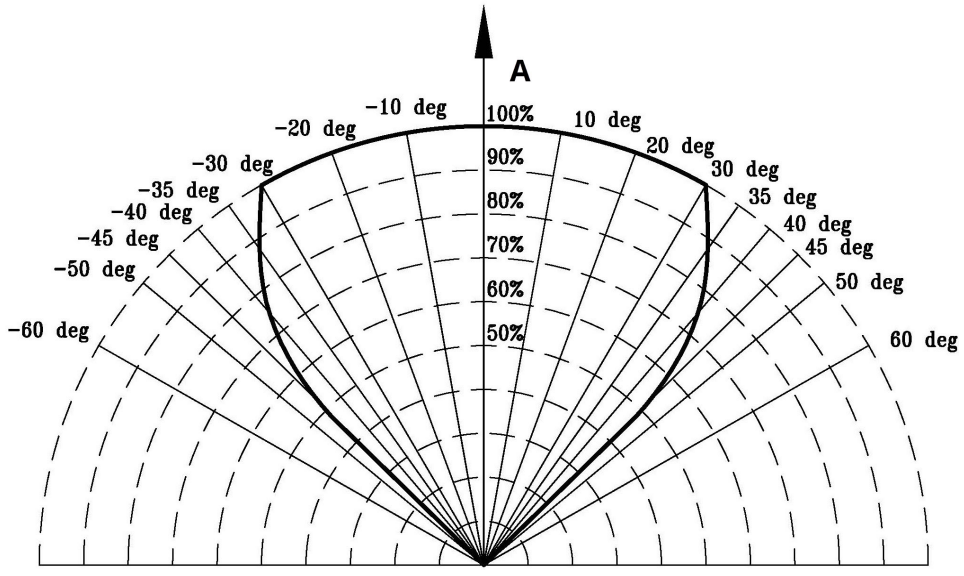

A. Relative range

Figure 2-7: Vertical field of view for hydrogen

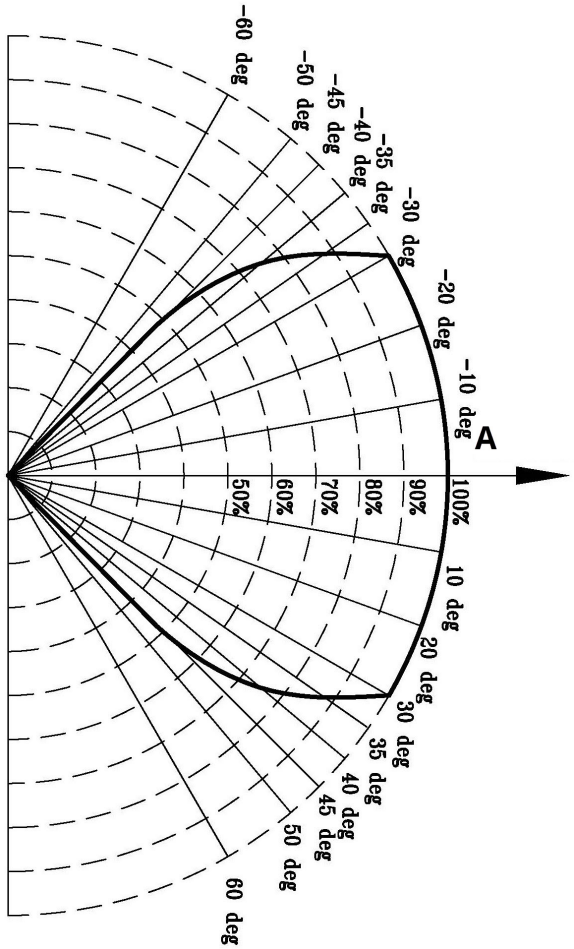

A. Relative range

2.3 Attach detector to tilt mount

Figure 2-8: Tilt mount

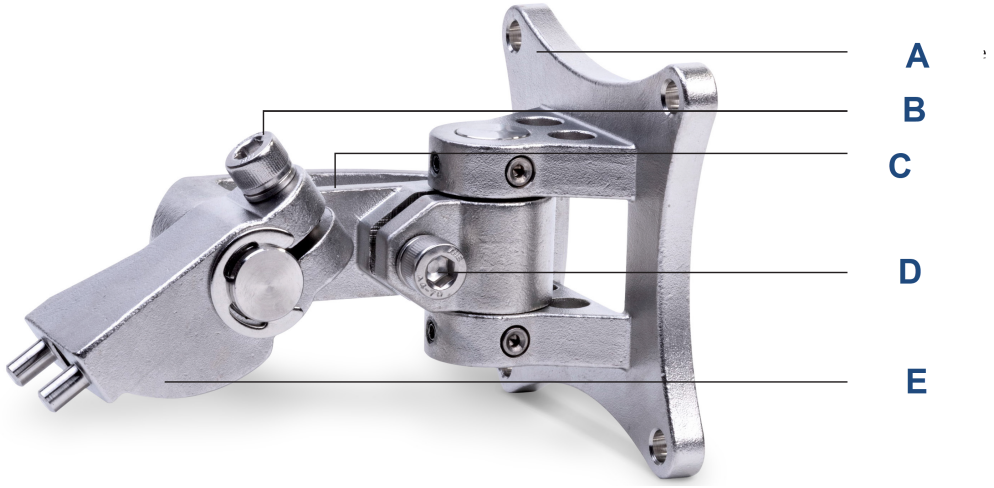

A. Tilt holding plate
B. Horizontal locking screw
C. Tilt mount
D. Vertical locking screw
E. Detector holding plate

Figure 2-9: Tilt mount with dimensions

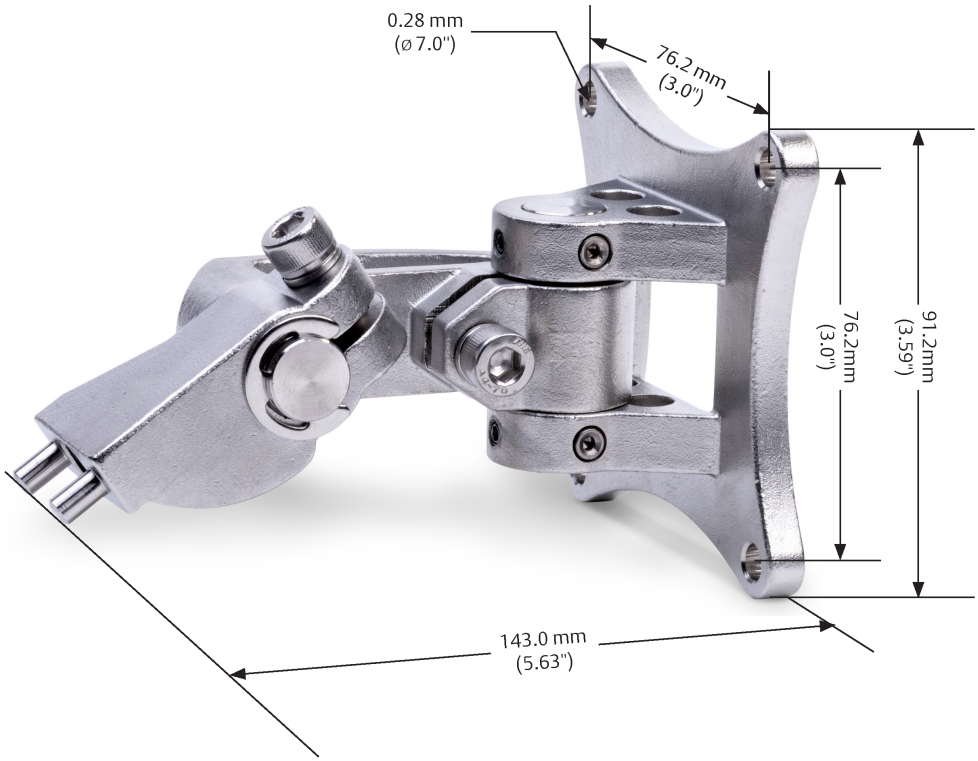

Procedure

1. Unpack the detector.

2. The device is provided with two plastic plugs.
The stainless steel stop plug used to seal the unused conduit is included in the device. Seal the detector with the stainless steel plug before use. Save the plug.

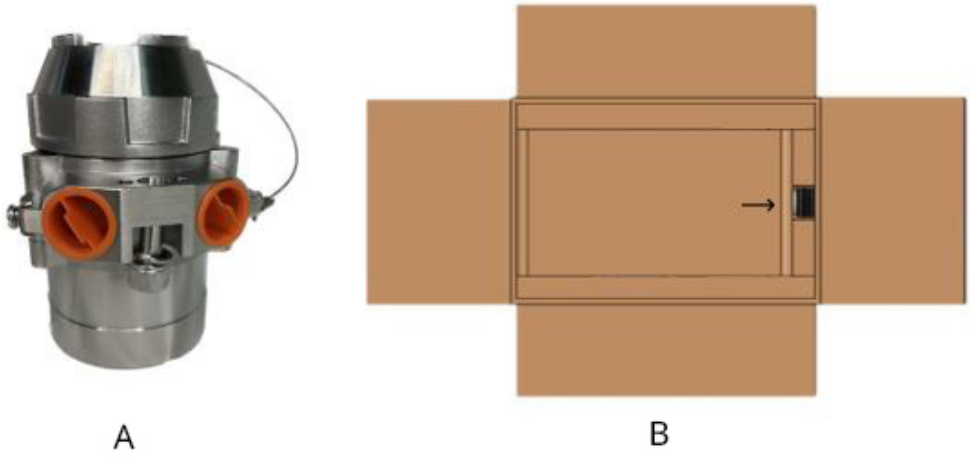

A. Detector with two plastic plugs
B. Product packaging with stainless-steel plug attachment

3. Insert location pins on the tilt mount into the openings on detector housing.

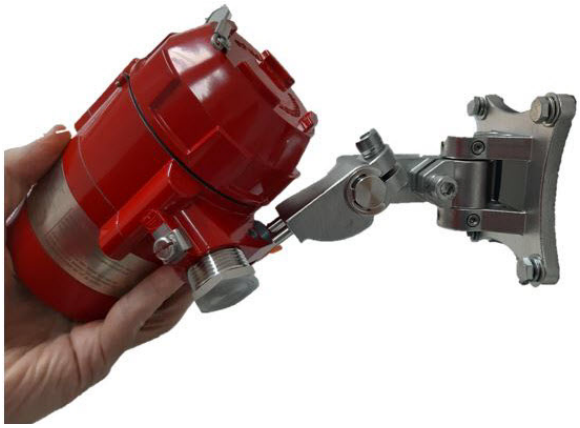

4. Thread the holding screw and tighten it.

Note
To change the detector field of view, release the horizontal and vertical locking screws.

5. Point the detector toward the protected area and ensure the view of the area is unobstructed.

6. Secure the detector in that position by tightening the locking screws on the tilt mount.
The detector is now correctly located, aligned, and ready to be connected to the system.

2.4 Open the back cover

Procedure

1. Loosen the back cover security screw.



A. Back cover security screw
B. Protective plug

2. Unscrew the back cover.

Note
The back cover is attached by a security cable.

3. Remove the protective plug.

2.5 Wire terminals and ground cable

NOTICE

Improper wiring may damage the detector.

Procedure

1. Connect the terminals according to Table 2-2.
The terminal details are also on the inside back cover.

Figure 2-10: Terminal box



Table 2-2: Terminal box

Terminal	Function
T1	24 Vdc (+)
T2	24 Vdc (-)

Terminal	Function
T3	**EXT BIT** (External built-in test [BIT] switch)
T4	**Fault NO** (Fault relay - normally open [NO])
T5	**Fault COM** (Fault relay)
T6	**Fault NC** (Fault relay - normally closed [NC])
T7	**Alarm NO** (Alarm relay - NO)
T8	**Alarm COM** (Alarm relay)
T9	**Alarm NC** (Alarm relay - NC)
T10	**0-20 mA (+)**
T11	**0-20 mA (-)**
T12	**Fast Out** (Alarm output)
T13	**RS485 (+)**
T14	**RS485 (-)**
T15	**ACC NO** (Accessory relay - normally open)
T16	**ACC COM** (Accessory relay)
T17	**ACC NC** (Accessory relay - normally closed)

When the fault relay wiring option is NC, the relay contact is open in **Normal** status (energized) and closed in **Fault** status (de-energized).

When the fault relay wiring option is NO, the relay contact is closed in **Normal** status (energized) and open in **Fault** status (de-energized).

When the alarm/accessories relay wiring option is NC, the relay contact is closed in **Normal** status (de-energized) and open in **Alarm** status (energized).

When the alarm/accessories relay wiring option is NO, the relay contact is open in **Normal** status (de-energized) and closed in **Alarm** status (energized).

2. Use Figure 2-11, Figure 2-12, Figure 2-13, and Figure 2-14 for typical wiring configurations.

Figure 2-11: Typical wiring for 4-wire controllers

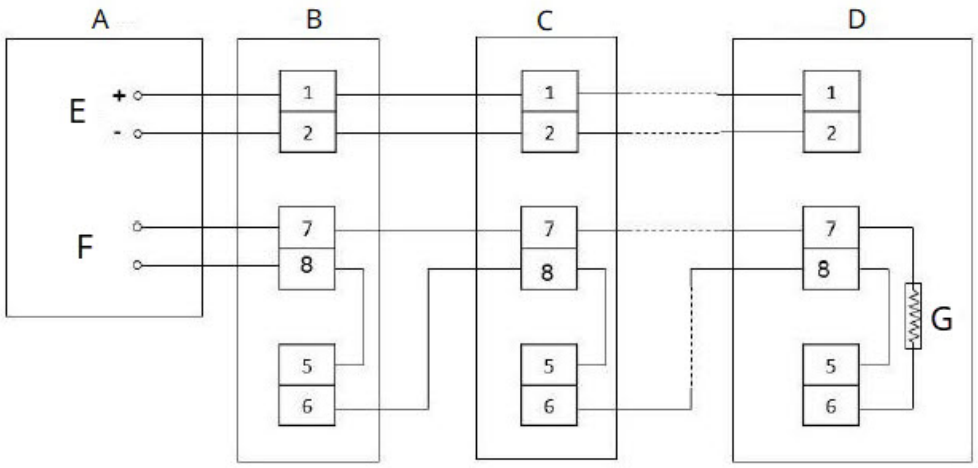

A. Controller
B. First detector
C. Second detector
D. Last detector
E. Power supply
F. Alarm loop
G. End of line

Figure 2-12: Non-isolated sink (3-wire)

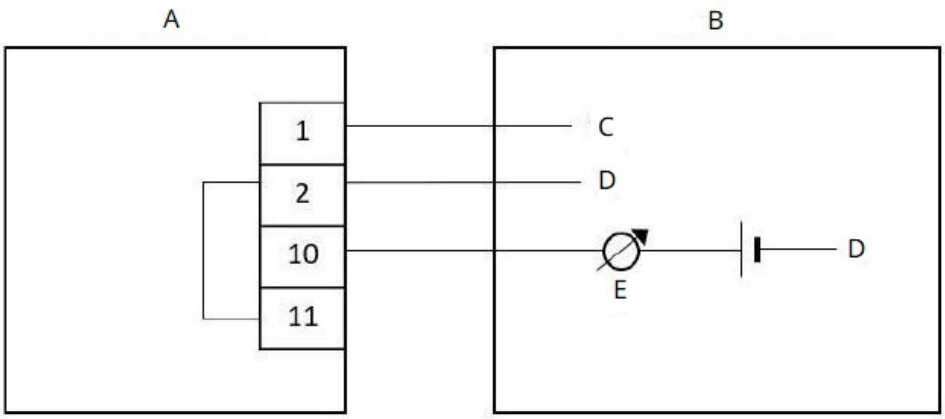

A. Detector
B. Controller
C. Input power: 18 to 32 Vdc
D. Return
E. 0–20 mA meter

Figure 2-13: Sink (4-wire)

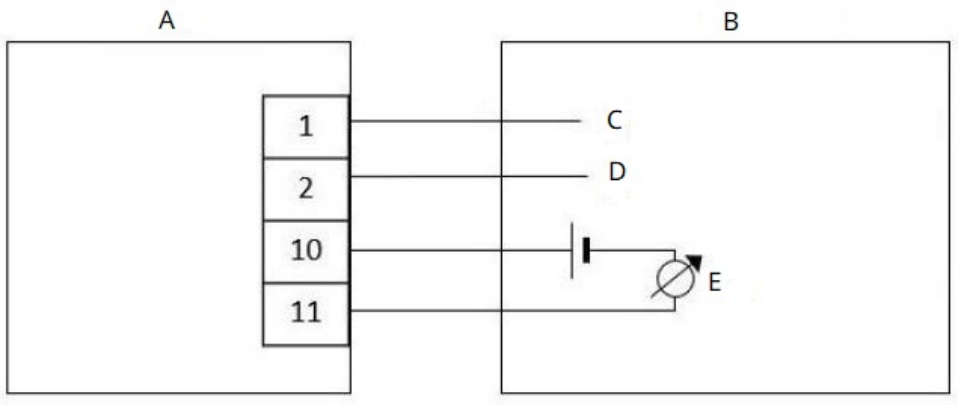

A. Detector
B. Controller
C. Input power: 18 to 32 Vdc
D. Return
E. 0–20 mA meter

Figure 2-14: Source 3-wire

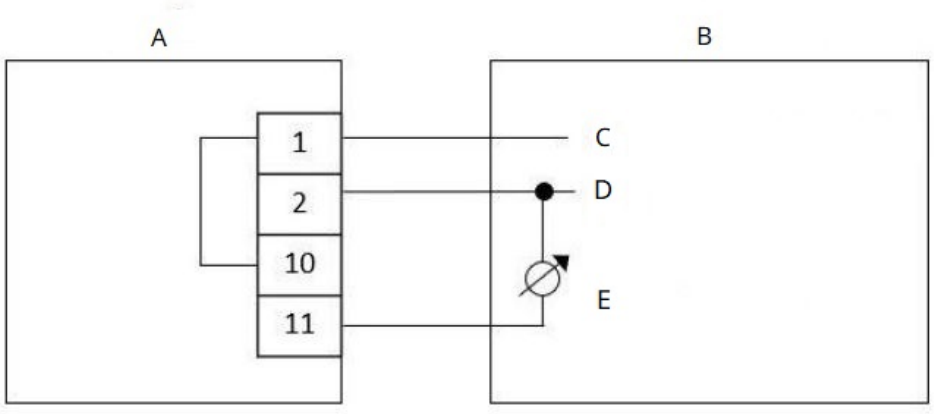

A. Detector
B. Controller
C. Input power: 18 to 32 Vdc
D. Return
E. 0–20 mA meter

Note

For additional configuration options, refer to the Flame Detectors.

3. Check the wires for secure mechanical connection and press them neatly against the terminal to prevent them from interfering while closing the back cover.
4. Close the terminal compartment by screwing the back cover on to the housing.

5. Tighten the back cover security screw.

Figure 2-15: Tilt mount

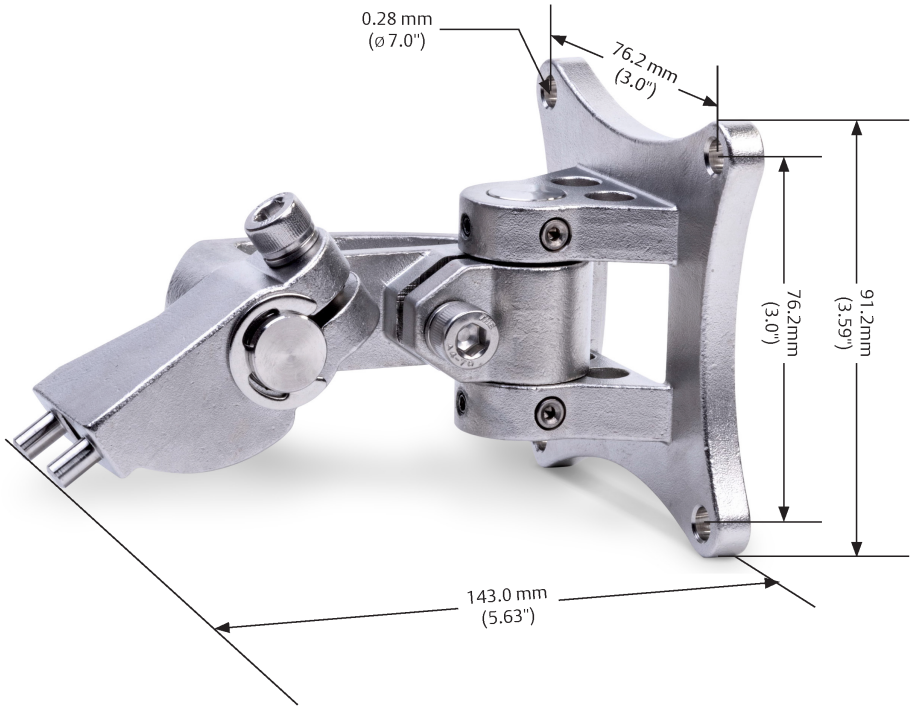

Figure 2-16: Closing security screw



A. Back cover security screw
B. Ground cable connection point

6. Connect the ground cable.

NOTICE

When the enclosed threaded plug is utilized in the conduit opening, it must be installed with a minimum thread engagement in order to comply with explosion-proof requirements. For straight threads, a minimum of seven threads must be engaged. For tapered threads, a minimum of five threads must be engaged.

Plug and seal the unused conduit connection with the provided conduit plug.

NOTICE

To comply with EMC directive 2014/30/EU and protect against interference caused by radio frequency interference (RFI) and electromagnetic interference (EMI), shield the cable to the detector and ground the detector.

2.6 Install protective cover

NOTICE

Always install the protective cover with the detector.

The protective cover is available in ABS plastic or stainless steel.

Table 2-3: Protective cover

Material	Part number
ABS plastic	877263
Stainless steel	877163

Procedure

1. Place the protective cover on top of the detector.



2. Secure the protective cover by tightening the screw.

Note

When installing the stainless steel protective cover, the same installation instructions apply.

2.7 Aim the detector

Note

Aim the detector toward the center of the detection zone and make sure you have a completely unobstructed view of the protected area.

Note

We recommend positioning the detector tilted down at a 45° angle to maximize coverage and prevent accumulation of dust and dirt.

⚠ WARNING

Do not begin installation until all conceivable considerations regarding detection location have been taken into account.

2.8 Changing default detector settings

You can modify the following settings using either the Modbus® Manager or HART® communication.

- Built-in test (BIT)
- Detection options
- Lock option
- 4–20 mA settings
- Modbus Manager settings
- Sensitivity
- Response time
- Heated optics functionality
- Alarm delay
- Accessory relay options
- Alarm latch
- Field of view integrity indication

Refer to the *Rosemount 975 Flame Detectors Modbus Manager Manual* or the *Rosemount 975 Flame Detectors HART Manual* on Rosemount 975 Flame Detector for instructions on changing these settings.

3 Operation

3.1 Power up the detector

Procedure

After connecting the detector to power, wait up to 60[1] seconds for the detector to complete the initial start-up procedure.

Note

Turning on the detector initiates the following sequence of events:

a. The yellow light-emitting diode (LED) flashes at 4 Hz.

b. The built-in test (BIT) is executed.

c. BIT completes.

d. Detector enters Normal mode, indicated by:

- Flashing green LED at 1 Hz.
- Fault relay contacts closing.
- mA output is 4 mA (for models featuring analog [voltage] output, this will be 2 V).

3.2 Test flame detectors

You can use the Rosemount flame simulators to test the Rosemount 975 flame detectors. You can also use the manual built-in text (BIT) to test the flame detectors.

Table 3-1: Flame simulator compatibility

Rosemount flame simulator model	Rosemount 975 flame detector model
FS-HR-975	Rosemount 975HR
FS-IR-975	Rosemount 975MR
FS-UVIR-975	Rosemount 975UF and 975UR

To test a flame detector:

Procedure

1. Power up the system and wait for up to 60 seconds for the detector to return to normal status.
   The Power light-emitting diode (LED) turns on.
2. Ensure all indicators show Normal.

After completing the task:

For full instructions on testing with a flame simulator, see the relevant Reference Manual.

Table 3-2: Flame simulator reference manuals

Rosemount flame simulator	Reference Manual
FS-HR-975	00809-0900-4975
FS-IR-975	00809-0500-4975
FS-UVIR-975	00809-0800-4975

1. *During startup, the device conducts an automated System Verification Self-Test (SVST) to validate the proper functioning of all components and systems. It will remain in **Standby** mode until the SVST successfully completes, confirming the device's operational readiness for accurate measurements. The SVST may trigger the 4–20 output for period of maximum 10 ms.*

4 Initial setup

4.1 Continuous feature test

The detector is supplied with default settings, including a continuous feature test.

To change these settings, refer to the *Rosemount 975 Flame Detectors Modbus ® Manager Manual* on Rosemount 975 Flame Detector.

During normal operation, the detector tests itself continuously and indicates a fault if a failure is found. This type of test complies with SIL-2 requirements.

The detector continuously tests:

- Input voltage level
- All internal regulator voltage level
- Voltage level status of sensor and sensor circuitry for noise or disconnection in the electronic circuitry
- 0–20 mA level output
- Relays and heater operation
- Processor watch dog
- Software
- Memory
- Oscillator frequency

4.2 Response to fault indication

If a failure is found, the detector indicates by:

- Light-emitting diode (LED): yellow flashes (4 Hz)
- Fault relay opens
- 0–20 mA: 1 mA default
- Analog voltage output: 0 V output

Note

The fault indications remain until the detector is turned off. The fault indications return if the fault is still found when power is restored.

4.3 Built-in test (BIT)

The detector's BIT checks the following:

- Sensors
- Window cleanliness
- Electronic circuitry

You can set the detector to perform the BIT in the following modes:

- **Automatic** and **Manual**
- **Manual** only

4.3.1 BIT operation

The BIT is intended to check optical integrity and electronic circuitry. The detector's status remains unchanged if the result of a BIT is the same as the current status (**Normal** or **BIT Fault**). The detector's status changes if the BIT differs from the current status.

Note

In **BIT Fault** status, the detector can continue to detect a fire in most cases.

4.3.2 Automatic BIT

The detector automatically performs a BIT every 15 minutes. A successful BIT sequence does not activate any indicator.

If required, you can modify the automatic BIT interval using the RS-485 Modbus® Manager or HART® communicator.

In case of a BIT fault, this sequence continues until a successful BIT occurs, when the detector resumes normal operation.

- As the result of a **successful** automatic/manual BIT, the fault relay remains **energized**.
- As the result of an **unsuccessful** automatic/manual BIT (which occurs after three failures), the fault relay **de-energizes**.

4.3.3 Manual BIT

You can initiate manual BIT using the Modbus Manager or HART communicator or by connecting terminal **3** to ground. You can also use the Modbus Manager or HART communicator to configure the manual BIT's alarm duration.

5 Maintenance

5.1 Keep maintenance records

Record all maintenance operations performed on a detector in accordance with site guidance and requirements.

5.2 Clean the detector

Procedure

1. Disconnect power from the flame detector.
2. Wipe the detector housing with clean water and a damp cloth.

   NOTICE

   Do not use a brush or sharp tools.

3. Identify where dust, dirt, or moisture accumulates on the detector window:
   a. Clean with a soft optical cloth.
   b. Rinse with clean water.
4. Detector performs a functional self-test every 15 minutes, checking dirty optics, electronic circuitry, and sensors' health.
5. Configure the frequency of the functional built-in test (BIT) using HART ®or Modbus®.
6. Follow local codes and regulations for maintenance and consider the site conditions.

6 Troubleshooting

6.1 Light-emitting diode (LED) is OFF

- LED is **OFF**
- **Fault** relay is open
- **0–20 mA** shows **0 mA**
- Analog voltage output is 0 V

6.1.1 Potential cause

No power to the device.

6.1.2 Recommended actions

Procedure

1. Check that the operating voltage is correct, according to Electrical specifications.
2. Check power polarity.
3. Check the terminal wiring.

6.2 Light-emitting diode (LED) flashes yellow at 4 Hz

- LED flashes yellow at 4 Hz
- **Fault** relay is open
- **0–20 mA** shows **1 mA**

6.2.1 Potential cause

Low voltage

6.2.2 Recommended action

Procedure

Check that the operating voltage is correct, according to Electrical specifications.

6.2.3 Potential cause

Faulty detector

6.2.4 Recommended action

Procedure

Re-power the detector.

6.3 Light-emitting diode (LED) flashes yellow at 4 Hz

- LED flashes yellow at 4 Hz
- Relay is open
- **0–20 mA** shows **2 mA**

6.3.1 Potential cause

Built-in test (BIT) fault

6.3.2 Recommended action

Procedure

Ensure the detector window and reflector mirror are clean.

6.3.3 Potential cause

Faulty detector

6.3.4 Recommended action

Procedure

Re-power the detector.

6.4 Light-emitting diode (LED) constantly red

- LED constantly red
- **Alarm** relay energized
- **0–20 mA** indicates **Alarm**

6.4.1 Potential cause

Existing alarm condition

6.4.2 Recommended action

Procedure

Check cause of alarm.

6.4.3 Potential cause

Alarm latched

6.4.4 Recommended action

Procedure

Ensure the **Alarm Latch** is not enabled in the detector settings.

6.4.5 Potential cause

Faulty detector

6.4.6 Recommended action

Procedure

Re-power the detector.

6.5 No HART® communication, 0-20 mA shows 0 mA

6.5.1 Potential cause

No HART is available at 0 mA level.

6.5.2 Recommended action

Procedure

For **Fault** mode, the default indication is **1 mA**. Configure this to **0 mA**.
Emerson does not recommend this when using a HART connection in order to preserve the HART communication.

7 Specifications

7.1 Technical specifications

7.1.1 Spectral response

Rosemount 975MR	Four infrared (IR) bands between 4 µm and 5 µm
Rosemount 975HR	Four IR bands between 2 µm and 5 µm
Rosemount 975UF	UV: 0.185 – 0.260 µm IR: 2.5 – 3.0 µm
Rosemount 975UR	UV: 0.185 – 0.260 µm IR: 4.3 – 4.8 µm

7.1.2 Detection range per fuel (ft./m)

Note

The ranges shown are at highest sensitivity setting for 1 $ft.^2$ (0.1 m^2) pan fire.

Table 7-1: Rosemount 975 models

Fuel	Rosemount 975MR	Rosemount 975HR	Rosemount 975UF	Rosemount 975UR
Gasoline	300 ft. (90 m)		93 ft. (28 m)	
N-Heptane	300 ft. (90 m)		93 ft. (28 m)	
Diesel fuel	207 ft. (63 m)		70 ft. (21 m)	
Kerosene	207 ft. (63 m)		70 ft. (21 m)	
Alcohol 95%	185 ft. (55 m)		57 ft. (17 m)	
Isopropyl alcohol (IPA)	185 ft. (55 m)		70 ft. (21 m)	
Methanol	185 ft. (55 m)		57 ft. (17 m)	
Methane	207 ft. (63 m)		60 ft. (18 m)	
Ethane	207 ft. (63 m)		60 ft. (18 m)	
Liquified petroleum gas (LPG)	207 ft. (63 m)		60 ft. (18 m)	
Polypropylene	160 ft. (49 m)		60 ft. (18 m)	
Paper	112 ft. (34 m)		33 ft. (10 m)	
Hydrogen[(1)]	N/A	164 ft. (50 m)	70 ft. (21 m)	N/A
Magnesium alloy[(2)]	N/A		33 ft. (10 m)	
Gun powder[(3)]	197 ft. (60 m)		66 ft. (20 m)	93 ft. (28 m)
Fireworks	33 ft. (10 m)		10 ft. (3 m)	
Cooking oil	207 ft. (63 m)		70 ft. (21 m)	
Mineral oil: 20W-50	207 ft. (63 m)		70 ft. (21 m)	
Wood	112 ft. (34 m)		33 ft. (10 m)	
Ethylene glycol	164 ft. (50 m)		23 ft. (7 m)	
Butyl acrylate	246 ft. (75 m)		70 ft. (21 m)	
Vinyl acetate	246 ft. (75 m)		70 ft. (21 m)	
Flammable adhesive	207 ft. (63 m)		70 ft. (21 m)	
Solvents	246 ft. (75 m)		70 ft. (21 m)	
Oil paint	207 ft. (63 m)		70 ft. (21 m)	
Jet fuel JP5	207 ft. (63 m)		70 ft. (21 m)	
Jet fuel A1	207 ft. (63 m)		70 ft. (21 m)	
Battery[(4)]	279 ft. (85 m)		75 ft. (23 m)	
Acetylene	203 ft. (61 m)		60 ft. (18 m)	
Ammonia fire[(5)]	N/A	117 ft. (35 m)	30 ft. (9 m)	17.5 ft. (5 m)
Silane fire[(6)]	N/A	N/A	67 ft. (20 m)	N/A

(1) 30-inch (0.75 m) high, 10-inch (0.25 m) wide plume fire.

(2) Contact Emerson representative for guidance on detecting magnesium alloy.

(3) 1.5 x 1.5-inch (3.8 x 3.8 cm) wide, 4-inch (10 cm) tall.

(4) One battery cell.

(5) Available for Rosemount 975HR, 975UF, and 975UR only.

(6) Available for Rosemount 975UF only.

7.1.3 Standard response time

Table 7-2: Rosemount 975 models

Rosemount 975MR	Rosemount 975HR	Rosemount 975UF	Rosemount 975UR
Typically < 2 sec at 131 ft. (40 m) 10 sec at 300 ft. (90 m)		Typically 5 sec at 93 ft. (28 m)	

7.1.4 Ultra fast response time

Table 7-3: Rosemount 975 models

Rosemount 975MR	Rosemount 975HR	Rosemount 975UF	Rosemount 975UR
Typically < 1 sec at 100 ft. (30 m)		20 msec for flash fire at 10 ft. (3 m)	

7.1.5 High speed response time

Table 7-4: Rosemount 975 models

Rosemount 975MR	Rosemount 975HR	Rosemount 975UF	Rosemount 975UR
50 msec for 1 $ft.^2$ (0.1 m^2) diameter sphere LPG-air mixture explosion at 66 ft. (20 m)		50 msec for 1 $ft.^2$ (0.1 m^2) diameter sphere LPG-air mixture explosion at 33 ft. (10 m)	

7.1.6 Sensitivity ranges

Note

All distances relate to detection of a 1 $ft.^2$ (0.1 m^2) n-heptane fire.

Table 7-5: Rosemount 975 models

Rosemount 975MR	Rosemount 975HR	Rosemount 975UF	Rosemount 975UR
Six ranges: • 10 ft. (3 m) • 50 ft. (15 m) • 100 ft. (30 m) • 150 ft. (45 m) • 215 ft. (65 m) • 300 ft. (90 m)		Three ranges: • 10 ft. (3 m) • 50 ft. (15 m) • 92 ft. (28 m)	

7.1.7 Field of view

Table 7-6: Rosemount 975 models

Rosemount 975MR	Rosemount 975HR	Rosemount 975UF	Rosemount 975UR
Horizontal: 100° Vertical: 95°	Hydrogen: Horizontal: 90° Vertical: 90°	Horizontal: 100° Vertical: 95°	
	Other fuels: Horizontal: 80° Vertical: 80°		

7.1.8 Temperature range (operating and storage)

Table 7-7: Rosemount 975 models

Rosemount 975MR	Rosemount 975HR	Rosemount 975UF	Rosemount 975UR
–76 °F (–60 °C) to +185 °F (+85 °C)			

7.1.9 Humidity

Non-condensing relative humidity up to 100 percent.

7.2 Electrical specifications

The electrical specifications apply to all models unless stated otherwise.

Operating voltage 24 Vdc nominal (18–32 Vdc)

Cable entries 2 x ¾-inch - 14 NPT conduits or 2 x M25 x 1.5 mm International Organization for Standardization (ISO)

Electrical input protection According to EN 50130

Electromagnetic capability Electromagnetic interference/Radio frequency interference (EMI/RFI) protected to EN61000-6-3 and EN 50130

Electrical interface The detector includes 17 terminals, one wiring option.

Table 7-8: Typical current consumption

Typical current consumption	Rosemount 975MR and 975HR	Rosemount 975UF and 975UR
Normal power consumption without heater	60 mA (1.4 W)	90 mA (2.2 W)
Normal power consumption without heater with alarm	90 mA (2.2 W)	120 mA (2.9 W)
Low power heater with alarm	140 mA (3.4 W)	180 mA (4.3 W)
Standard power mode heater with alarm	280 mA (6.7 W)	320 mA (7.7 W)

7.2.1 Electrical input protection

The input circuit is protected against voltage-reversed polarity, voltage transients, surges, and spikes according to EN 54-10.

7.2.2 Outputs

Relays	**Alarm**, **Fault**, and **Auxiliary** SPDT volt-free contacts rated 2A at 30 Vdc
Analog	5 V at detection, 0 V at fault, 2 V at normal
0–20 mA (stepped)	**Fault**: 0 +1 mA Built-in test **(BIT) Fault**: 2 mA ± 0.3 mA **Normal**: 4 mA ± 0.3 mA **Warning**: 16 mA ± 0.3 mA **Alarm**: 20 mA ± 0.3 mA

7.2.3 Heated optics

The front window can be heated to improve performance in ice, condensation, and snow conditions. The heater increases the temperature of the optical surface by 5 °C to 25 °C above the ambient temperature. The heated optics can be configured in three ways:

OFF	Heating is always **OFF**.
ON-LOW	Heating is always **ON** - low power
ON-HIGH	Heating is always **ON** - high power
AUTO - LOW	Low power
AUTO - HIGH	High power

Note

In **Auto** mode, the starting heat temperature can be defined between 32 °F (0 °C) and 86 °F (30 °C). The detector stops heating the window when the temperature is 59 °F (15 °C) above the start temperature.

7.3 Mechanical specifications

7.3.1 Enclosure options

Stainless steel 316 with electropolish finish

Heavy duty copper free aluminum (less than one percent), polyurethane painted

7.3.2 Tilt mount

Stainless steel 316 with electropolish finish

7.3.3 Detector dimensions

4 in. (100.6 mm) x 4.6 in. (117 mm) x 6.18 in. (155 mm)

7.3.4 Weight

Stainless steel detector: 6.3 lb. (2.9 kg)

Aluminum detector: 2.8 lb. (1.3 kg)

Tilt mount: 2.5 lb. (1.1 kg)

7.3.5 Environmental standards

DNV 2-4

7.3.6 Water and dust

IP66 and IP68 per EN 60529

Appendix A Reference data

A.1 Ordering information, specifications, dimensional drawings, and installation drawings

To view current ordering information, specifications, and dimensional drawings, follow these steps:

Procedure

1. Go to Rosemount 975 Flame Detector.
2. Select the appropriate product.
3. Scroll down to ***Documents***.
4. Select the appropriate Product Data Sheet.

A.2 Product certifications

To view current Rosemount 975 Series product certifications, see *Rosemount 975 Series Flame Detectors Certification Information* on Rosemount 975 Flame Detectors.

Appendix B Immunity to false alarm sources

IAD: Immunity at any distance

Table B-1: Immunity to false alarm sources

Radiation source	Immunity distance			
	Rosemount 975MR	Rosemount 975HR	Rosemount 975UF	Rosemount 975UR
Indirect or reflected sunlight	IAD	IAD	IAD	IAD
Vehicle headlights (low beam) conforming to MS53023	IAD	IAD	IAD	IAD
Incandescent frosted glass light, 300 W	IAD	IAD	IAD	IAD
Fluorescent light with white enamel reflector, standard office or shop, 80 W (or two 40 W)	IAD	IAD	IAD	IAD
Electric arc (15/32-inch (12 mm)) gap at 4,000 Vac, 60 Hz	IAD	IAD	IAD	IAD
Arc welding (5/16-inch (6 mm)) rod, 210 A	See Table B-2.			
Ambient light extremes (darkness to bright light with snow, water, rain, desert glare, or fog)	IAD	IAD	IAD	IAD
Bright colored clothing, including red and safety orange	IAD	IAD	IAD	IAD
Electronic flash (180 W seconds minimum output)	IAD	IAD	IAD	IAD
Movie light, 625 W quartz DWY lamp (Sylvania S.G. 55 or equivalent)	>6.5 ft. (2 m)	>6.5 ft. (2 m)	>13 ft. (4 m)	>3 ft. (1 m)
Blue green dome light conforming to M251073	IAD	IAD	IAD	IAD
Flashlight (MX 991/U)	IAD	IAD	IAD	IAD
Radiation heater, 3,000 W	>3 ft. (1 m)	>3 ft. (1 m)	IAD	IAD
Radiation heater, 1,000 W with fan	IAD	IAD	IAD	IAD
Quartz lamp (1,000 W)	>3 ft. (1 m)	>3 ft. (1 m)	See Table B-3.	
Mercury vapor lamp	IAD	IAD	IAD	IAD
Grinding metal	IAD	IAD	IAD	IAD
Lit cigar	>1 ft. (0.3 m)	>1 ft. (0.3 m)	IAD	IAD
Lit cigarette	>1 ft. (0.3 m)	>1 ft. (0.3 m)	IAD	IAD
Match, wood, stick, including flare up	>20 ft. (6 m)	>10 ft. (3 m)	>7 ft. (2 m)	>7 ft. (2 m)
Vehicle exhaust diesel fume For Rosemount 975MR only	IAD	IAD	N/A	N/A

Table B-2: Welding immunity distance

Level	Range	Distance
1	>10 ft. (3 m)	>1.6 ft. (0.5 m)
2	>50 ft. (15 m)	>6 ft. (1.8 m)
3	>100 ft. (30 m)	>12 ft. (3.7 m)
4	>150 ft. (45 m)	>17 ft. (6 m)
5	>215 ft. (65 m)	>25 ft. (7.5 m)
6	>295 ft. (89.9 m)	>33 ft. (10.1 m)

Table B-3: Halogen immunity distance

Sensitivity level	Detection range	Halogen distance			
		Rosemount 975 and 975UF		Rosemount 975 and 975UR	
		750 W	1,000 W	750 W	1,000 W
1	10 ft. (3 m)	>13 ft. (4 m)	>15 ft. (4.5 m)	>6 ft. (1.8 m)	>8 ft. (2.5 m)
2	50 ft. (15.2 m)	>43 ft. (13.1 m)	>50 ft. (15.2 m)	>15 ft. (4.5 m)	>16 ft. (4.9 m)
3	93 ft. (28.3 m)	>66 ft. (20.1 m)	>70 ft. (21.3 m)	>27 ft. (8.2 m)	>30 ft. (9.1 m)

Appendix C Wiring instructions

C.1 General instructions for electrical wiring

Prerequisites

Follow the instructions detailed in this section for determining the correct wire gauge to be used for the installation.

Procedure

1. Use Table C-1 to determine the required wire gauge/size for general wiring, such as relay wiring. Calculate the permitted voltage drop with respect to load current, wire gauge, and length of wires.

   Table C-1: Maximum DC resistance at 68 °F/20 °C for copper wire

AWG No.	mm^2	Ohm per 100 ft.	Ohm per 100 m
20	0.51 – 0.61	1.07	3.50
18	0.81 – 0.96	0.67	2.20
16	1.22 – 1.43	0.43	1.40
14	1.94 – 2.28	0.27	0.88

2. Use Table C-2 to select wire gauge for power supply wires.

⚠ WARNING

Do not connect any circuit or load to detectors' supply inputs.

- Select **number of detectors** connected in one circuit.
- Select wiring **length** per your installation requirements.
- Refer to **power supply** range for voltage extreme applied.

Table C-2: Wiring length (ft/m)

Number of detectors	Recommended Wire Diameter (AWG)					Power supply range (Vdc)
24	18	16	14	-	-	22–32
20	18	16	14	-	-	22–32
16	20	18	16	14	-	22–32
12	20	18	16	14	-	20–32
8	20	18	16	14	-	20–32
4 and less	20	18	16	16	14	20–32
ft/m	164/50	328/100	492/150	656/200	820/240	
	Maximum length from power supply to last detector					

3. Use Table C-3 to select the compatible ferrule size for the wire.
   - The **minimum ferrule length** required is 10 mm of ferrule conductive material.
   - The **bridge connection** between Vin to 4–20+ terminal should be with 20 AWG wire.

Table C-3: Ferrule size

Single wire connection		Dual wire connection	
Wire size (AWG)	**Ferrule size (AWG)**	**Wire size (AWG)**	**Ferrule size (AWG)**
20	20	20 + 20	16
18	18	18 + 20	16
16	16	16 + 20	16
14	14	14 + 20	14

Manual
00809-1400-4975, Rev. AF
July 2026

For more information: Emerson.com

©2026 Emerson. All rights reserved.

Emerson Terms and Conditions of Sale are available upon request. The Emerson logo is a trademark and service mark of Emerson Electric Co. Rosemount is a mark of one of the Emerson family of business units. All other marks are the property of their respective owners.

ROSEMOUNT™

EMERSON™