Quick Start Guide
00825-0100-3372
Rev. AA
May 2019

Rosemount™ 372

HF Resistant pH sensor



ROSEMOUNT™

EMERSON

Essential Instructions

Read this page before proceeding!

Emerson designs, manufactures and tests its products to meet many national and international standards. Because these sensors are sophisticated technical products, you MUST properly install, use, and maintain them to ensure they continue to operate within their normal specifications. The following instructions MUST be adhered to and integrated into your safety program when installing, using, and maintaining Rosemount products. Failure to follow the proper instructions may cause any one of the following situations to occur: loss of life; personal injury; property damage; damage to this sensor; and warranty invalidation.

- Read all instructions prior to installing, operating, and servicing the product.
- If you do not understand any of the instructions, contact your Emerson representative for clarification.
- Follow all warnings, cautions, and instructions marked on and supplied with the product.
- Inform and educate your personnel in the proper installation, operation, and mainte nance of the product.
- Install your equipment as specified in the Installation Instructions of the appropriate Instruction Manual and per applicable local and national codes. Connect all products to the proper electrical and pressure sources.
- To ensure proper performance, use qualified personnel to install, operate, update, program, and maintain the product.
- When replacement parts are required, ensure that qualified people use replacement parts specified by Emerson. Unauthorized parts and procedures can affect the product's performance, place the safe operation of your process at risk, and VOID YOUR WARRANTY. Third-party substitutions may result in fire, electrical hazards, or improper operation.
- Ensure that all equipment doors are closed and protective covers are in place, except when maintenance is being performed by qualified persons, to prevent electrical shock and personal injury.

The information contained in this document is subject to change without notice.

⚠ CAUTION

Sensor/Process Application Compatibility

The wetted sensor materials may not be compatible with process composition and operating conditions. Application compatibility is entirely the responsibility of the user.

⚠ CAUTION

Before removing the sensor, be absolutely certain the process pressure is reduced to 0 psig and the process temperature is at safe level.

⚠ CAUTION

Special Conditions for Safe Use

1. All pH/ORP sensors have a plastic enclosure which must only be cleaned with a damp cloth to avoid the danger due to a build up of an electrostatic charge.

2. All pH/ORP sensor models are intended to be in contact with the process fluid and may not meet the 500V r.m.s. a.c. test to earth.

This must be taken into consideration at installation.

⚠ WARNING

Physical access

Unauthorized personnel may potentially cause significant damage to and/or misconfiguration of end users' equipment. This could be intentional or unintentional and needs to be protected against.

Physical security is an important part of any security progam and fundamental to protecting your system. Restrict physical access by unauthorized personnel to protect end users' assets. This is true for all systems used within the facility.

Contents

Section 1: Specifications

1.1 Specifications 1
1.2 Ordering Information 2

Section 2: Installation

2.1 Unpacking and Inspection 3
2.2 Storage 3
2.3 Electrode Preparation 3

Section 3: Wiring

3.1 Wiring for Rosemount 372 5

Section 4: Calibration and Maintenance

4.1 Two Point Buffer Calibration 9
4.2 Recommended pH Sensor Standardization 9
4.3 Maintenance 9

Section 1: Specifications

1.1 Specifications

Table 1-1: Rosemount 372 HF resistant pH sensor specifications

Materials of construction
Ultem, Viton, glass, Kynar
Process connections
3/4 in. forward (insertion) and 1 in. reverse (submersion) MNPT
Insertion depth
2.2 in. to 8.3 in.
Measured range
0 to 12 pH (0-14 pH if no sodium ions are present)
Pressure range
-13 to 135 psig (6.9 to 1035 kPa abs)
Temperature range
-5 to 50 °C [23 to 122 °F] (100 °C [212 °F] if no fluoride ions are present)
Temperature compensation
Pt 100
Weight/shipping weight
0.4 kg/0.9 kg (1 lb/ 2 lb)
pH glass type
Hemispherical
Glass diameter
7.8mm
Glass impedance
Less than 400 M @ 25 °C
Acidic error
Less than .01 pH in 1.0M HCl @ 0.0pH
Reference type
Double junction with saturated KCL in cross-linked polymer

1.2 Ordering Information

Table 1-2: Rosemount 372 HF resistant pH sensor ordering information

Model	Sensor type
372	pH/ORP Sensor
Preamplifier/cable	
01	25 ft. cable with integral preamplifier
02	15 ft. cable without integral preamplifier
Typical Model Number: 372-01	

Section 2: Installation

2.1 Unpacking and Inspection

Inspect the outside of the carton for any damage. If damage is detected, contact the carrier immediately. Inspect the instrument and hardware. Make sure all items in the packing list are present and in good condition. Notify the factory if any part is missing.

2.2 Storage

1. It is recommended that electrodes be stored in their original shipping containers until needed.
2. Do not store at temperatures below -5 °C (23 °F).
3. Electrodes should be stored with a protective cap containing KCl solution (PN 9210342).
4. For overnight storage, immerse the sensor in tap water or a 4 pH buffer solution.
5. A pH glass electrode has a limited shelf life of one year.

Figure 2-1 Sensor dimensions

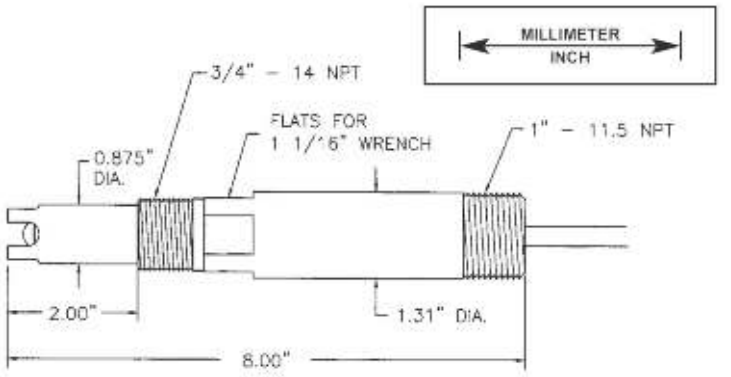

2.3 Electrode Preparation

1. Remove electrode from shipping container.
2. Remove the protective boot covering the electrode bulb.
3. Rinse away salt film with clean water, then shake the electrode so that the internal solution fills the bulb, thus removing any air trapped there.

NOTICE

Do not allow lubricant to coat electrode bulb or reference junction. If it does, wipe it clean before installation.

Figure 2-2 Sensor orientation

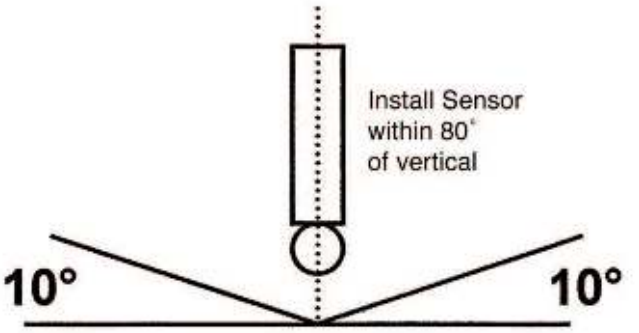

Section 3: Wiring

3.1 Wiring for Rosemount 372

For additional wiring information on this product, including sensor combinations not shown here, please refer to the Liquid Transmitter Wiring Diagrams.

Figure 3-1: Rosemount 372-01 to Rosemount 1056/56/1057 Transmitter Wiring

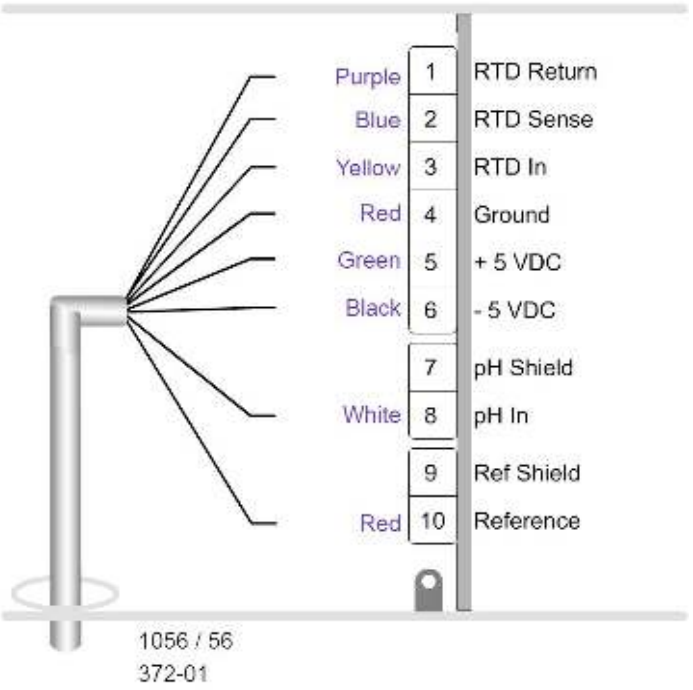

Figure 3-2: Rosemount 372-01 to Rosemount 1066 Transmitter

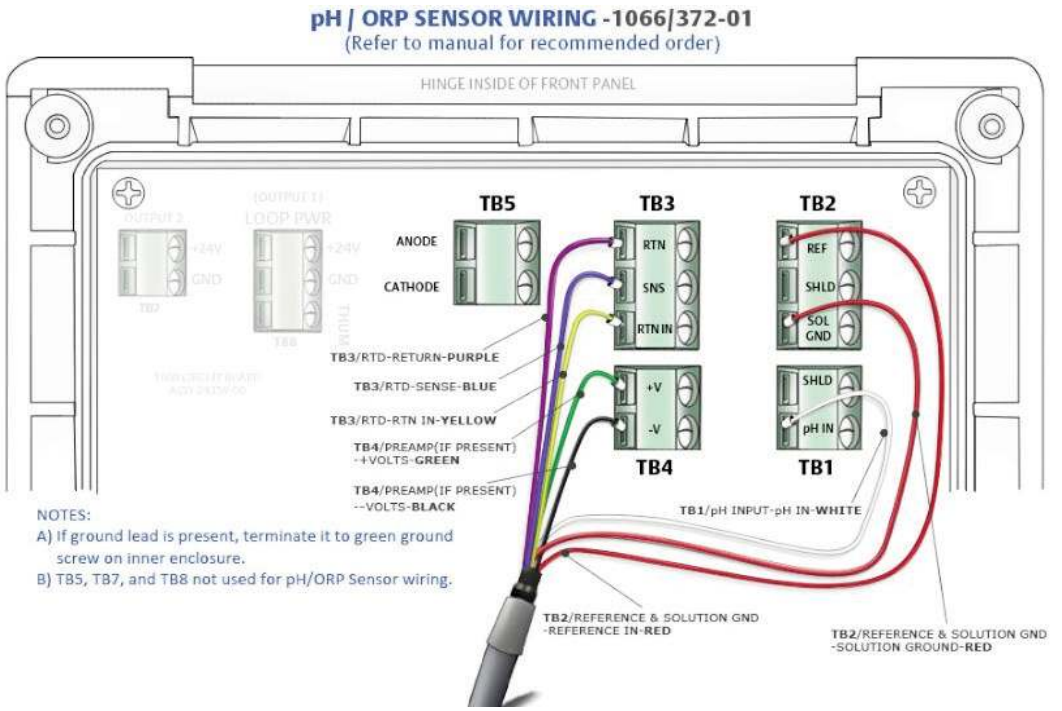

Figure 3-3: Rosemount 372-01 to Rosemount 5081 Transmitter Wiring

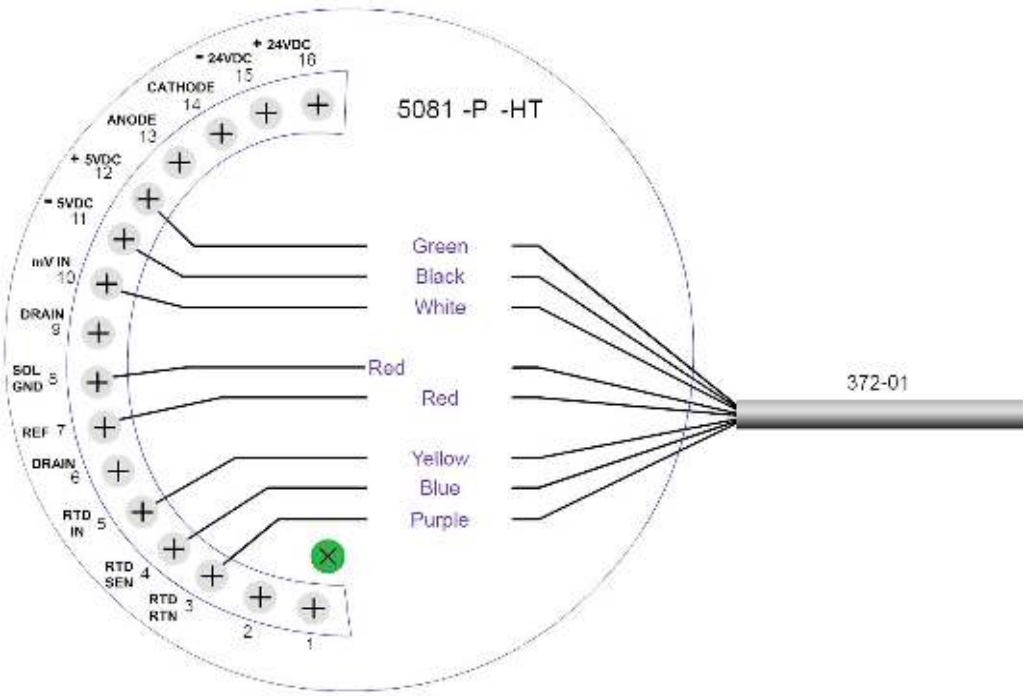

Figure 3-4: Rosemount 372-02 to Rosemount 1056/56/1057 Transmitter Wiring

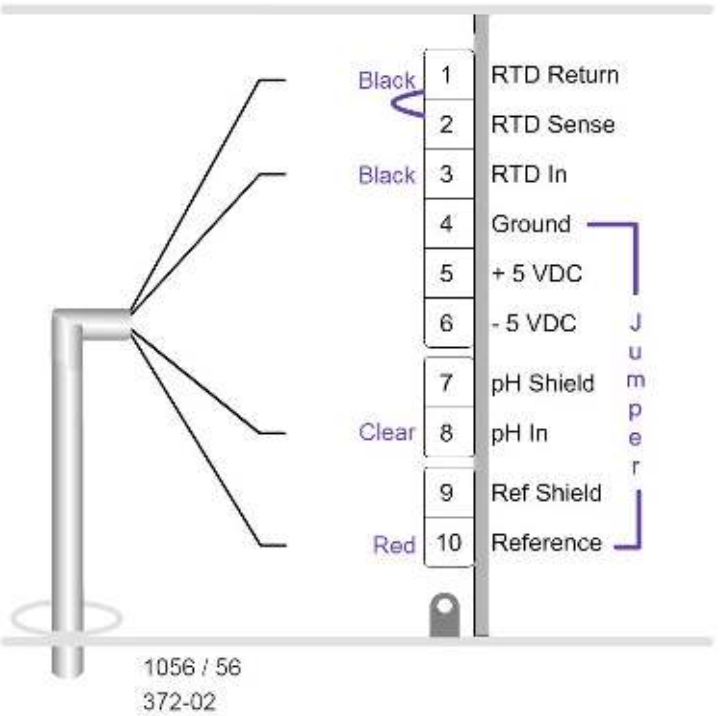

Figure 3-5: Rosemount 372-02 to Rosemount 1066 Transmitter Wiring

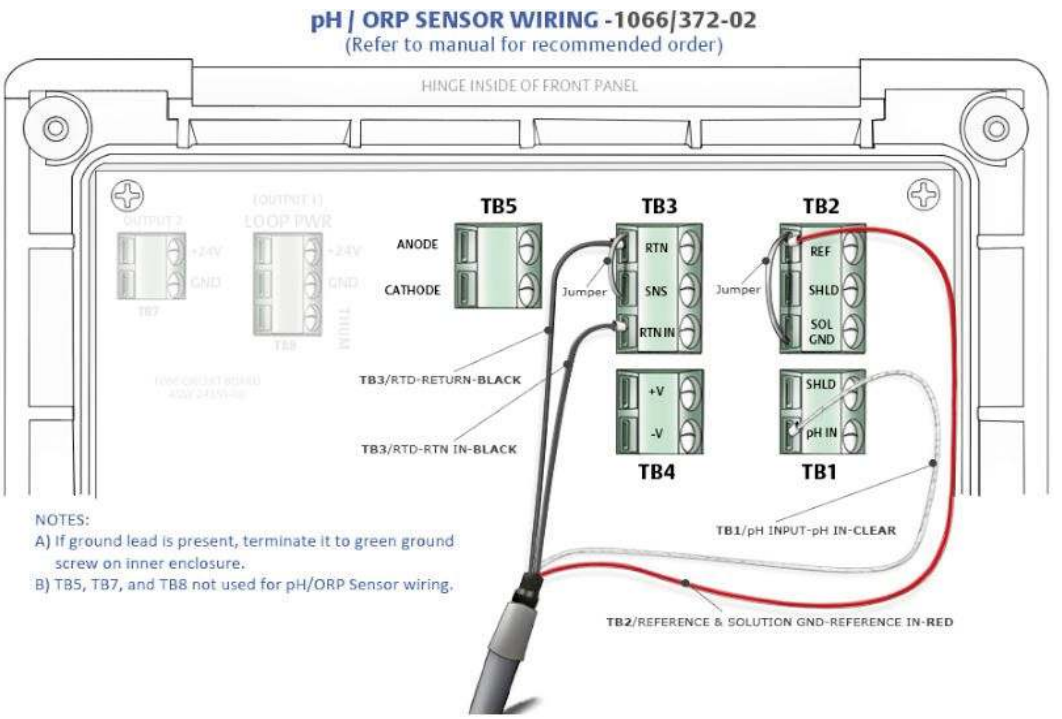

Figure 3-6: Rosemount 372-02 to Rosemount 5081 Transmitter Wiring

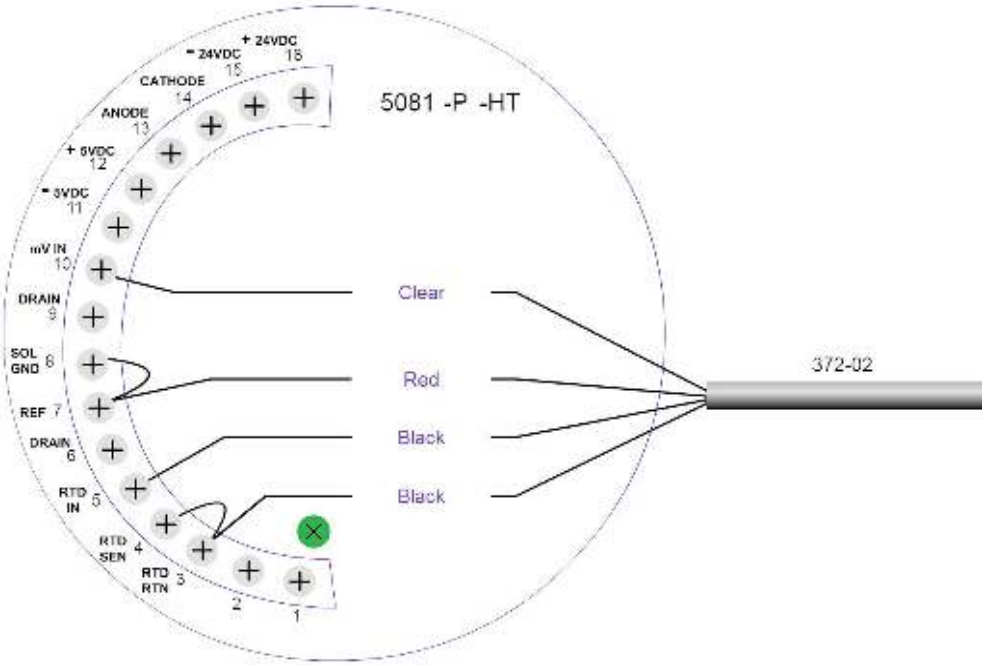

Section 4: Calibration and Maintenance

4.1 Two Point Buffer Calibration

Select two stable buffer solutions, preferably pH 4.0 and 7.0 (pH buffers other than pH 4.0 and pH 7.0 can be used as long as the pH values are at least two pH units apart).

NOTICE

A pH 7 buffer solution reads a mV value of approx. zero, and pH buffers read approximately ± 59.1 mV for each pH unit above or below pH 7. Check the pH buffer manufacturer specifications for millivolt values at various temperatures since it may affect the actual value of the buffer solution mV/pH value.

1. Immerse sensor in the first buffer solution. Allow sensor to equilibrate to the buffer temperature (to avoid errors due to temperature differences between the buffer solution and sensor temperature) and wait for reading to stabilize. Value of buffer can now be acknowledged by transmitter.
2. Once the first buffer has been acknowledged by the transmitter, rinse the buffer solution off of the sensor with distilled or deionized water.
3. Repeat steps 1 and 2 using the second buffer solution.
4. The theoretical slope value, according to the Nernst equation for calculating pH, is approximately 59.17 mV/pH. Over time the sensor will age, both in the process and in storage, and will result in reduced slope values. To ensure accurate readings, it is recommended that the electrode be replaced when the slope value falls below 47 to 49 mV/pH.

4.2 Recommended pH Sensor Standardization

For maximum accuracy, the sensor can be standardized online or with a process grab sample after a buffer calibration has been performed and the sensor has been conditioned to the process. Standardization accounts for the sensor junction potential and other interferences. Standardization will not change the sensor's slope but will simply adjust the transmitter's reading to match that of the known process pH.

4.3 Maintenance

Electrodes should respond rapidly. Sluggishness, offsets, and erratic readings are indicators that the electrodes may need cleaning or replacement.

1. To remove oil deposit, clean the electrode with a mild non-abrasive detergent.
2. To remove scale deposits, soak electrodes for 30 to 60 minutes in a 5 hydrochloric acid solution.
3. Temperature effect on life expectancy: If glass electrode life expectancy is 100 @ 25 °C (77°F), then it will be approximately 25 @ 80 °C (176 °F), and approximately 5 @ 120 °C (248°F).

00825-0100-3372
Rev. AA
May 2019

www.Emerson.com/Rosemount

Youtube.com/user/Rosemount

LinkedIn.com/company/Emerson-Automaton-Solutions

Twitter.com/Rosemount_News

facebook.com/Rosemount

Emerson Automation Solutions

8200 Market Blvd.
Chanhassen, MN 55317,
USA
Tel +1 800 999 9307
Fax +1 952 949 7001

Liquid.CSC@Emerson.com

©2017 Emerson Automation Solutions. All rights reserved.

The Emerson logo is a trademark and service mark of Emerson Electric Co. Rosemount is a mark of one of the Emerson family of companies. All other marks are the property of their respective owners.

The contents of this publication are presented for information purposes only, and while effort has been made to ensure their accuracy, they are not to be construed as warranties or guarantees, express or implied, regarding the products or services described herein or their use or applicability. All sales are governed by our terms and conditions, which are available on request. We reserve the right to modify or improve the designs or specifications of our products at any time without notice.

ROSEMOUNT™

EMERSON