Reference Manual
00809-0100-4803, Rev GB
October 2018

Rosemount™ 3051S MultiVariable™ Transmitter



EMERSON™

Safety messages

NOTICE

Read this manual before working with the product. For personal and system safety, and for optimum product performance make sure you thoroughly understand the contents before installing, using, or maintaining this product.

For technical assistance, contacts are listed below:

Customer Central

Technical support, quoting, and order-related questions. United States - 1-800-999-9307

(7:00 am to 7:00 pm CST) Asia Pacific- 65 777 8211Europe/Middle East/Africa - 49 (8153) 9390

North American Response Center

Equipment service needs.

1-800-654-7768 (24 hours—includes Canada)

Outside of these areas, contact your local Emerson™ representative.

⚠ CAUTION

The products described in this document are NOT designed for nuclear-qualified applications. Using non-nuclear qualified products in applications that require nuclear-qualified hardware or products may cause inaccurate readings.For information on Rosemount nuclear-qualified products, contact your local Emerson Sales Representative.

⚠ WARNING

Explosions could result in death or serious injury.

Installation of this transmitter in an explosive environment must be in accordance with the appropriate local, national, and international standards, codes, and practices. Review the approvals section of this manual for any restrictions associated with a safe

- — Before connecting a Field Communicator in an explosive atmosphere, ensure the instruments in the loop are installed in accordance with intrinsically safe or non-incendive field wiring practices.
- — In an explosion-proof/flameproof installation, do not remove the transmitter covers when power is applied to the unit.

Process leaks may cause harm or result in death.

- — Install and tighten process connectors before applying pressure.
- — Do not attempt to loosen or remove flange bolts while the transmitter is in service.

Electrical shock can result in death or serious injury.

- Avoid contact with the leads and terminals. High voltage that may be present on leads can cause electrical shock.

Warnings

⚠ WARNING

Explosions could result in death or serious injury.

Installation of this transmitter in an explosive environment must be in accordance with the appropriate local, national, and international standards, codes, and practices. Please review the approvals section of the Rosemount 2051 Reference Manual for any restrictions associated with a safe installation.

- Before connecting a HART® communicator in an explosive atmosphere, ensure the instruments in the loop are installed in accordance with intrinsically safe or non-incendive field wiring practices.
- In an Explosion-Proof/Flameproof installation, do not remove the transmitter covers when power is applied to the unit.

Process leaks may cause harm or result in death.

- Install and tighten process connectors before applying pressure.

Electrical shock can result in death or serious injury.

- Avoid contact with the leads and terminals. High voltage that may be present on leads can cause electrical shock.

⚠ WARNING

Electrical shock can result in death or serious injury.

- Avoid contact with the leads and terminals.

Process leaks could result in death or serious injury.

- Install and tighten all four flange bolts before applying pressure.
- Do not attempt to loosen or remove flange bolts while the transmitter is in service.

Replacement equipment or spare parts not approved by Emerson Process Management for use as spare parts could reduce the pressure retaining capabilities of the transmitter and may render the instrument dangerous.

- Use only bolts supplied or sold by Emerson Process Management as spare parts.
- Refer to page 208 for a complete list of spare parts.

Improper assembly of manifolds to traditional flange can damage sensor module.

- For safe assembly of manifold to traditional flange, bolts must break back plane of flange web (i.e., bolt hole) but must not contact sensor module housing.

Contents

Chapter 1 Introduction 7
1.1 Using this manual 7
1.2 Product recycling/disposal 8

Chapter 2 Configuration 9
2.1 Overview 9
2.2 Unresolved topicref 9
2.3 Engineering Assistant installation 10
2.4 Flow configuration 12
2.5 Basic device configuration 31
2.6 Detailed device configuration 34
2.7 Variable configuration 43
2.8 Menu trees and Field Communicator Fast Keys 62

Chapter 3 Installation 71
3.1 Overview 71
3.2 Safety messages 71
3.3 Installation considerations 72
3.4 Installation procedures 73
3.5 Rosemount 305 and 304 Manifolds 91

Chapter 4 Operation and Maintenance 107
4.1 Overview 107
4.2 Safety messages 107
4.3 Transmitter calibration 108
4.4 Transmitter functional tests 117
4.5 Process variables 118
4.6 Field upgrades and replacements 120

Chapter 5 Troubleshooting 129
5.1 Overview 129
5.2 Device diagnostics 129
5.3 Measurement quality and limit status 135
5.4 Engineering Assistant communication troubleshooting 137
5.5 Measurement troubleshooting 137
5.6 Service support 141

Chapter 6 Safety Instrumented Systems Requirements 143
6.1 Safety Instrumented Systems (SIS) Certification 143
6.2 Rosemount 3051SMV safety certified identification 143
6.3 Installation in SIS applications 143

6.4 Configuring in SIS applications 144
6.5 Rosemount 3051SMV SIS operation and maintenance 145
6.6 Inspection 147

Appendix A **Appendix A 149**
A.1 Product Certifications 149
A.2 Ordering Information, Specifications, and Dimensional Drawings 149

1 Introduction

1.1 Using this manual

The sections in this manual provide information on installing, operating, and maintaining the Rosemount™ 3051S MultiVariable™ Transmitter (Rosemount 3051SMV). The sections are organized as follows:

- Configuration provides instruction on commissioning and operating Rosemount 3051SMV. Information on software functions, configuration parameters, and online variables is also included.
- Installation contains mechanical and electrical installation instructions.
- Operation and Maintenance contains operation and maintenance techniques.
- Troubleshooting provides troubleshooting techniques for the most common operating problems.
- Safety Instrumented Systems Requirements contains identification, commissioning, maintenance, and operations information for the Rosemount 3051S MultiVariable Safety Instrumented System (SIS) Safety Transmitter.
- Specifications and Reference Data supplies reference and specification data, as well as ordering information.
- Contains intrinsic safety approval information, European ATEX directive information, and approval drawings.

1.1.1 Models covered

The following Rosemount 3051SMV Transmitters are covered in this manual:

Table 1-1: Rosemount 3051SMV Measurement with Fully Compensated Mass and Energy Flow Output

Measurement type	Multivariable type - M
1	Differential pressure, static pressure, temperature
2	Differential pressure and static pressure
3	Differential pressure and temperature
4	Differential pressure

Table 1-2: Rosemount 3051SMV Measurement with Direct Process Variable Output

Measurement type	Multivariable type - P
1	Differential pressure, static pressure, temperature
2	Differential pressure and static pressure
3	Differential pressure and temperature
5	Coplanar static pressure and temperature
6	In-line static pressure and temperature

1.2 Product recycling/disposal

Recycling of equipment and packaging should be taken into consideration and disposed of in accordance with local and national legislation/regulations.

2 Configuration

2.1 Overview

This section contains information for configuring the flow and device configuration for the Rosemount™ 3051S MultiVariable™ Transmitter (Rosemount 3051SMV). Engineering Assistant installation and Flow configuration instructions apply to Engineering Assistant version 6.3 or later. Basic device configuration, Detailed device configuration , and Variable configuration are shown for AMS Device Manager version 9.0 or later, but also include Fast Key sequences for Field Communicator version 2.0 or later. Engineering Assistant and AMS Device Manager screens are similar and follow the same instructions for use and navigation. For convenience, Field Communicator Fast Key sequences are labeled "Fast Keys" for each software function below the appropriate headings. The functionality of each host as show in Table 2-1:

Note
Coplanar transmitter configurations measuring gage pressure and process temperature (measurement 5) will report as the pressure as differential pressure. This will be reflected on the LCD display, nameplate, digital interfaces, and other user interfaces.

Table 2-1: Host Functionality

- Available — Not available

Multivariable type	Functionality	Rosemount 3051SMV Engineering Assistant	AMS Device Manager	Field Communicator
Fully compensated mass and energy flow (M)	Flow Configuration	•	•	—
	Device Configuration	•	•	•
	Test Calculation	•	•	•
	Calibration	•	•	•
	Diagnostics	•	•	•
Direct process variable output (P)	Device Configuration	—	•	•
	Calibration	—	•	•
	Diagnostics	—	•	•

2.2 Unresolved topicref

Unresolved topicref placeholder.

This is a placeholder for unresolved topicref links.

2.3 Engineering Assistant installation

2.3.1 Engineering Assistant version 6.3 or later

The Rosemount 3051SMV Engineering Assistant 6.3 or later is PC-based software that performs configuration, maintenance, diagnostic functions, and serves as the primary communication interface to the Rosemount 3051SMV with the fully compensated mass and energy flow feature board.

The Rosemount 3051SMV Engineering Assistant software is required to complete the flow configuration.

2.3.2 Installation and initial setup

The following are the minimum system requirements to install the Rosemount 3051SMV Engineering Assistant software:

- Pentium-grade Processor: 500 MHz or faster
- Operating system: Windows™ Professional 7, 8.1, 10
  - 32-bit
  - 64-bit
- 256 MB RAM
- 100 MB free hard disk space
- RS232 serial port or USB port (for use with HART® modem)
- CD-ROM

Installing the Rosemount 3051SMV Engineering Assistant version 6.3 or later

About this task

Engineering Assistant is available with or without the HART modem and connecting cables. The complete Engineering Assistant package contains the software CD and one HART modem with cables for connecting the computer to the Rosemount 3051SMV (See Ordering information.)

Procedure

1. Uninstall any existing versions of Engineering Assistant 6 currently installed on the PC.
2. Insert the new Engineering Assistant disk into the CD-ROM.
3. Windows should detect the presence of a CD and start the installation program. Follow the on-screen prompts to finish the installation. If Windows does not detect the CD, use Windows Explorer or My Computer to view the contents of the CD-ROM, and then double select the SETUP.EXE program.
4. A series of screens (Installation Wizard) will appear and assist in the installation process. Follow the on-screen prompts. It is recommended the default installation settings are used.

Example

Note
Engineering Assistant version 6.3 or later requires the use of Microsoft® .NET Framework version 4.0 or later. If .NET version 4.0 is not currently installed, the software will be automatically installed during the Engineering Assistant installation. Microsoft .NET version 4.0 requires an additional 200 MB of disk space.

Connecting to a PC

About this task

Figure 2-1 shows how to connect a computer to a Rosemount 3051SMV.

Figure 2-1: Connecting a PC to the Rosemount 3051SMV

Rosemount 3051SMV without optional process temperature connection

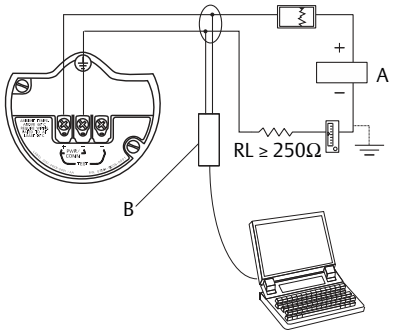

Rosemount 3051SMV with optional process temperature connection

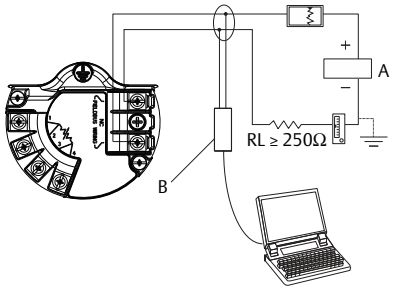

A. Power supply
B. HART modem

Procedure

1. Remove the cover from the field terminals side of the housing.
2. Power the device as outlined in Connect wiring and power up.
3. Connect the HART modem cable to the PC.
4. On the side marked “Field Terminals,” connect the modem mini-grabbers to the two terminals marked “PWR/COMM.”
5. Launch the Rosemount 3051SMV Engineering Assistant. For more information on launching Engineering Assistant, see Launching Engineering Assistant.
6. Once the configuration is complete, replace cover and tighten until metal contacts metal to meet flameproof/explosion-proof requirements. See Cover installation for more information.

2.4 Flow configuration

2.4.1 Rosemount 3051SMV Engineering Assistant 6.3 or later

The Rosemount 3051SMV Engineering Assistant is designed to guide the user through the setup of the flow configuration of a Rosemount 3051SMV. The flow configuration screens allow the user to specify the fluid, operating conditions, and information about the primary element including the inside pipe diameter. This information will be used by the Rosemount 3051SMV Engineering Assistant to create the flow configuration parameters that can be sent to the transmitter or saved for future use.

NOTICE

To ensure correct operation, download the most current version of the Engineering Assistant software at Emerson.com/en-us/catalog/rosemount-engineering-assistant-6.

Figure 2-2 shows the path in which the Rosemount 3051SMV Engineering Assistant will guide the user through a flow configuration. If a natural gas, custom liquid, or custom gas option is chosen, an extra screen will be provided to specify the gas composition or fluid properties.

Figure 2-2: Flow Configuration Flowchart

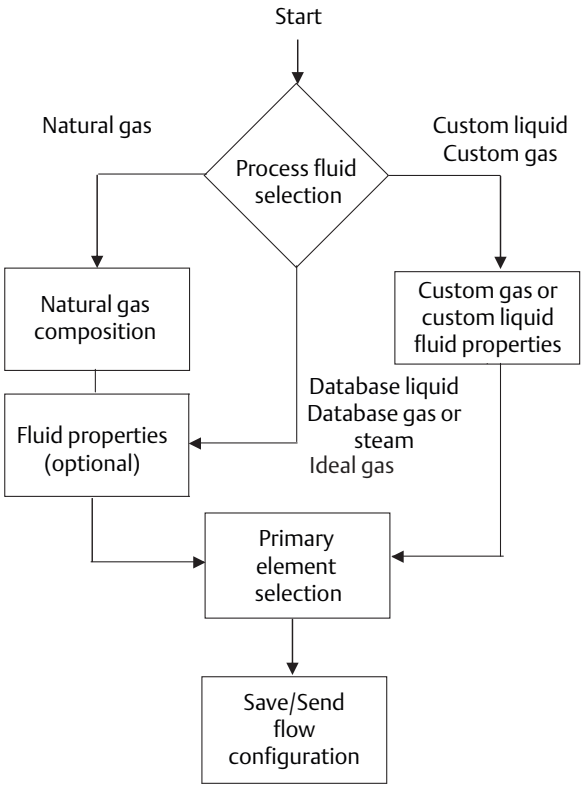

Online and offline mode

The Engineering Assistant software can be used in two modes: online and offline. In online mode, the user can receive the configuration from the transmitter, edit the configuration, send the changed configuration to the transmitter, or save the configuration to a file. In offline mode, the user may create a new flow configuration and save the configuration to a file or open and modify an existing file.

2.4.2 Basic navigation overview

Figure 2-3: Engineering Assistant Basic Navigation Overview

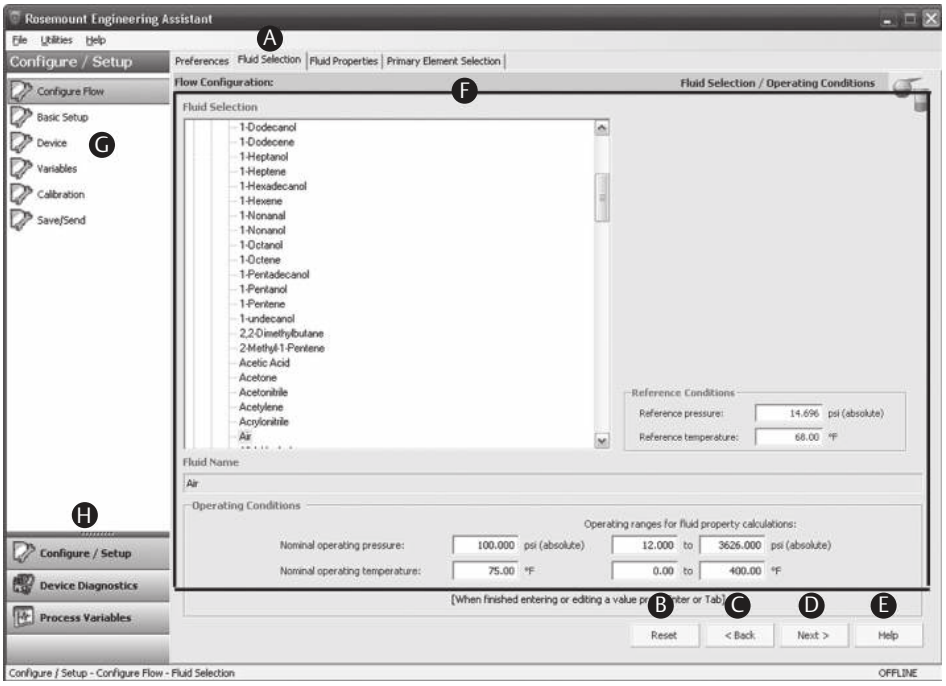

The Engineering Assistant software can be navigated in a variety of ways. The numbers below correspond to the numbers shown in Figure 2-3.

A. *The navigation tabs contain the flow configuration information. In offline mode, each tab will not become active until the required fields on the previous tab are completed. In online mode, these tabs will be functional unless a change on a preceding tab is made.*
B. *The **Reset** button will return each field within all of the flow configuration tabs (Fluid Selection, Fluid Properties, and Primary Element Selection) to the values initially displayed at the start of the configuration.*
    A. *If editing a previously saved flow configuration, the values will return to those that were last saved.*
    B. *If starting a new flow configuration, all entered values will be erased.*
C. *The **Back** button is used to step backward through the flow configuration tabs.*
D. *The Next button is used to step forward through the flow configuration tabs. The Next button will not become active until all required fields on the current page are completed.*
E. *The **Help** button may be selected at any time to get a detailed explanation of the information required on the current configuration tab.*
F. *Any configuration information that needs to be entered or reviewed will appear in this portion of the screen.*
G. *These menus navigate to the Configure Flow, Basic Setup, Device, Variables, Calibration, and Save/Send tabs.*
H. *These buttons navigate to Config/Setup, Device Diagnostics, or Process Variables sections.*

2.4.3 Launching Engineering Assistant

About this task

Flow configuration for the Rosemount 3051SMV is achieved by launching the Engineering Assistant Software from the START menu. The following steps show how to open the Engineering Assistant Software, and connect to a device:

Procedure

1. Select the Start menu > All Programs > **Engineering Assistant**. Engineering Assistant will open to screen as shown in Figure 2-4.
2. If working offline, select the **Offline** button located on the bottom of the screen as shown in Figure 2-4.

Example

OR

If working online, select the **Search** button located on the lower right corner of the screen as shown in Figure 2-4. Engineering Assistant will begin to search for online devices. When the search is completed, select the device to communicate with and select **Receive Configuration** button.

The HART Master Level can be set to either primary or secondary. Secondary is the default and should be used when the transmitter is on the same segment as another HART communication device. The COM Port and device address may also be edited as needed.

Figure 2-4: Engineering Assistant Device Connection Screen

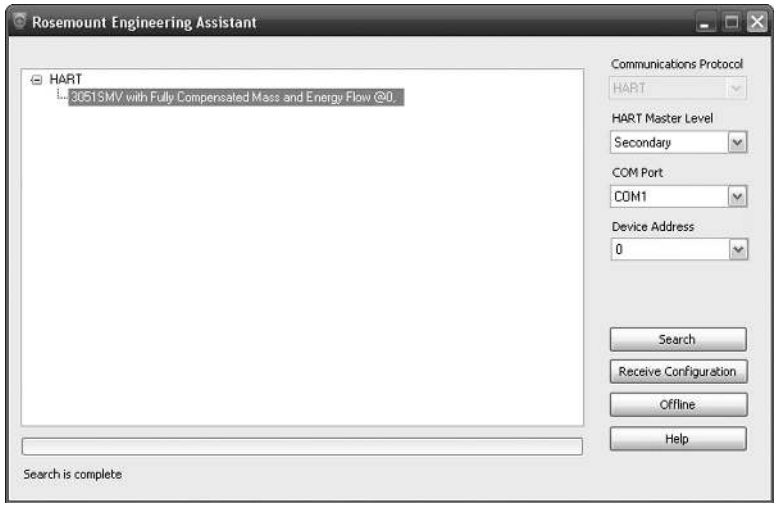

2.4.4 Preferences

The Preferences tab, shown in Figure 2-5, allows the user to select the preferred engineering units to display and specify flow configuration information.

- Select the preferred engineering units. If units are needed other than the default U.S. or S.I. units, use the Custom Units setting. If Custom Units are selected, configure the Individual Parameters using the drop-down menus.
- Unit preferences selected will be retained for future Engineering Assistant sessions. Check the box to prevent the Preferences tab from being automatically shown in future sessions. The Preferences are always available by select the Preferences tab.

Figure 2-5: Preferences Tab

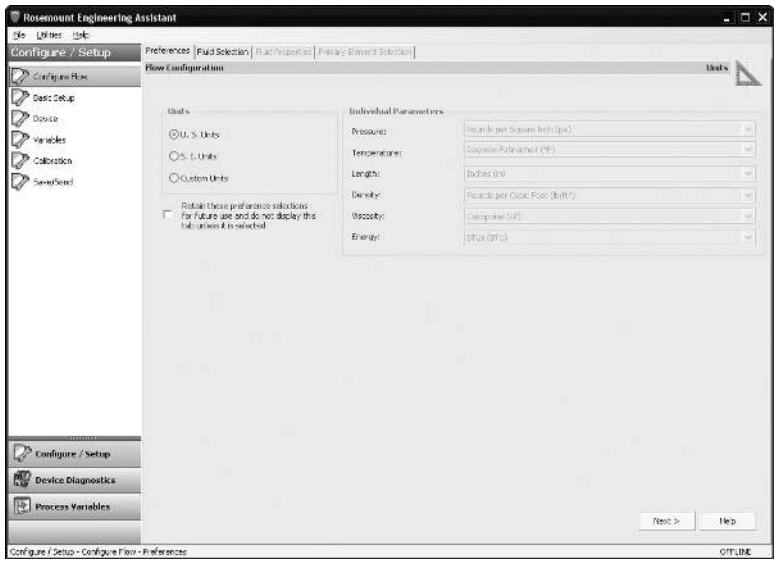

2.4.5 Fluid selection for database liquid/gas

About this task

The Fluid Selection tab (see Figure 2-6) allows the user to select the process fluid.

Figure 2-6: Fluid Selection Tab

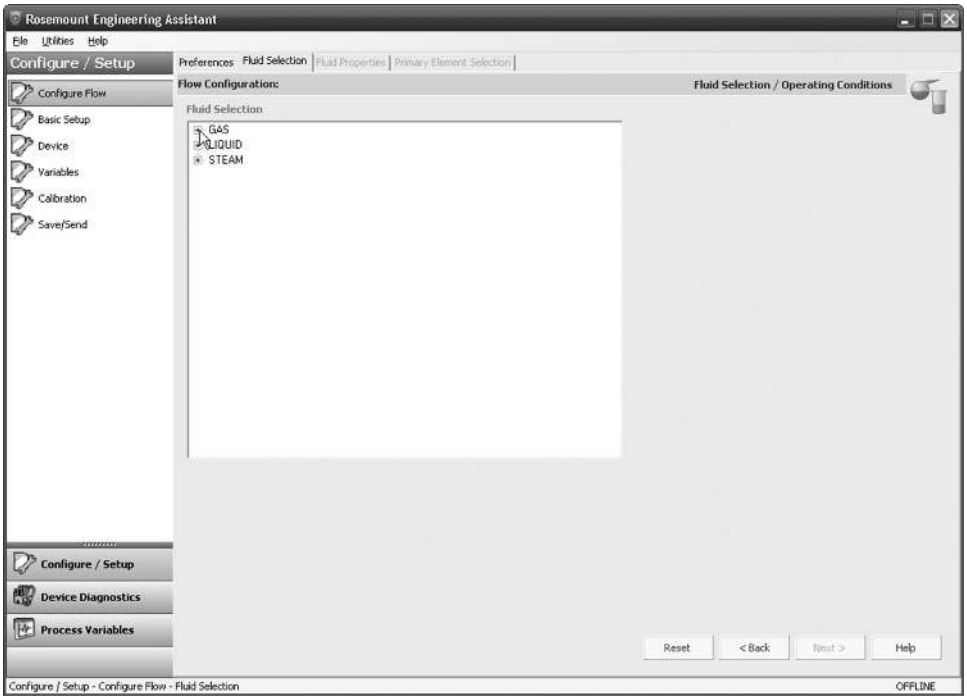

Note

The following example will show a flow configuration for an application with database gas air as the process fluid and a Rosemount 405C Conditioning Orifice Plate as the primary element. The procedure to configure an application with other fluids and other primary elements will be similar to this example. Natural gases, custom liquids, and custom gases require additional steps during the configuration. See Other fluid configurations for more information.

Procedure

1. Engineering Assistant may open to the Preferences tab. Using the tabs at the top of the screen, navigate to the Fluid Selection tab.
2. Expand the Gas category (select the + icon).
3. Expand the Database Gas category.
4. Select the appropriate fluid (Air for this example) from the list of database fluids.

Figure 2-7: Fluid Selection Tab - Database Gas Air

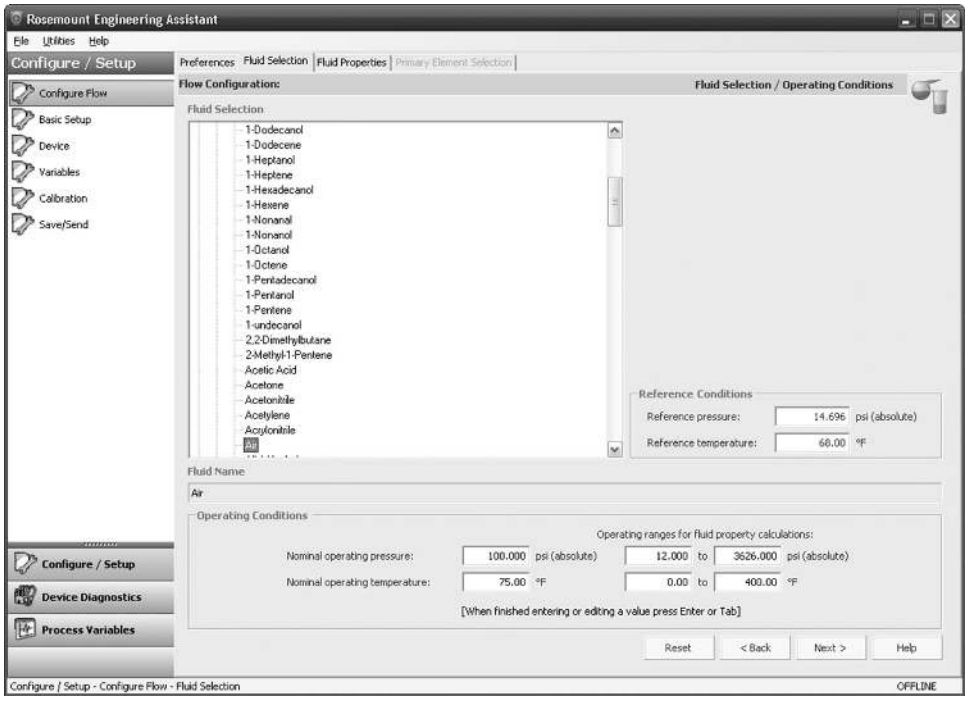

5. Enter the Nominal Operating Pressure, select the **Enter** or **Tab** key.

Note
The nominal operating pressure must be entered in absolute pressure units.

6. Enter the Nominal Operating Temperature, select the Enter or Tab key. Engineering Assistant will automatically fill in suggested operating ranges, as shown in . These values may be edited as needed by the user.
7. Verify the Reference Conditions are correct for the application. These values may be edited as needed.

Note
Reference pressure and temperature values are used by Engineering Assistant to convert the flow rate from mass units to mass units expressed as standard or normal volumetric units.

8. Select **Next >** to proceed to the Fluid Properties tab.

Example

Table 2-2: Liquids and Gases Database

1,1,2,2–Tetrafluoroethane	Acrylonitrile	Formaldehyde	Nitrous Oxide
1,1,2–Trichloroethane	Air	Formic Acid	Nonanal
1,2,4–Trichlorobenzene	Allyl Alcohol	Furan	n–Butane

Table 2-2: Liquids and Gases Database *(continued)*

1,2–Butadiene	Ammonia	Helium–4	n–Butanol
1,2–Propylene Glycol	Aniline	Hydrazine	n–Butyraldehyde
1,3–Propylene Glycol	Argon	Hydrogen	n–Butyronitrile
1,3,5–Trichlorobenzene	Benzene	Hydrogen Chloride	n–Decane
1,3–Butadiene	Benzaldehyde	Hydrogen Cyanide	n–Dodecane
1,4–Dioxane	Benzyl Alcohol	Hydrogen Peroxide	n–Heptadecane
1,4–Hexadiene	Biphenyl	Hydrogen Sulfide	n-Heptane
1–Butene	Bromine	Isobutane	n–Hexane
1–Decanol	Carbon Dioxide	Isobutylbenzene	n-Nonane
1–Decene	Carbon Monoxide	Isohexane	n–Octane
1–Dodecanol	Carbon Tetrachloride	Isoprene	n–Pentane
1–Dodecene	Chlorine	Isopropanol	Oxygen
1–Heptanol	Chlorotrifluoroethylene	Melamine	Pentafluoroethane
1–Heptene	Chloroprene	Methane	Phenol
1–Hexadecanol	Cycloheptane	Methanol	Propane
1–Hexene	Cyclohexane	Methyl Acrylate	Propadiene
1–Octanol	Cyclopentane	Methyl Ethyl Ketone	Pyrene
1–Octene	Cyclopentene	Methyl Vinyl Ether	Propylene
1–Nonanol	Cyclopropane	m–Chloronitrobenzene	p-Nitroaniline
1–Pentadecanol	Decanal	m–Dichlorobenzene	Sorbitol
1–Pentanol	Divinyl Ether	Neon	Styrene
1–Pentene	Ethane	Neopentane	Sulfur Dioxide
1–Undecanol	Ethanol	Nitric Acid	Toluene
2,2–Dimethylbutane	Ethylamine	Nitric Oxide	Trichloroethylene
2–Methyl–1–Pentene	Ethylbenzene	Nitrobenzene	Vinyl Acetate
Acetic Acid	Ethylene	Nitroethane	Vinyl Chloride
Acetone	Ethylene Glycol	Nitrogen	Vinyl Cyclohexane
Acetonitrile	Ethylene Oxide	Nitrogen Trifluoride	Vinylacetylene
Acetylene	Fluorene	Nitromethane	Water

2.4.6 Fluid properties

Note
The Fluid Properties tab is an optional step and is not required to complete a flow configuration.

The Fluid Properties tab for the database gas air is shown in Figure 2-8. The user may view the properties of the chosen fluid. The fluid properties are initially shown at nominal conditions. To view density, compressibility, and viscosity of the selected fluid at other pressure and temperature values, enter a Pressure and Temperature and select Calculate.

Note
Changing the pressure and temperature values on the Fluid Properties tab does not affect the flow configuration.

Figure 2-8: Fluid Properties Tab

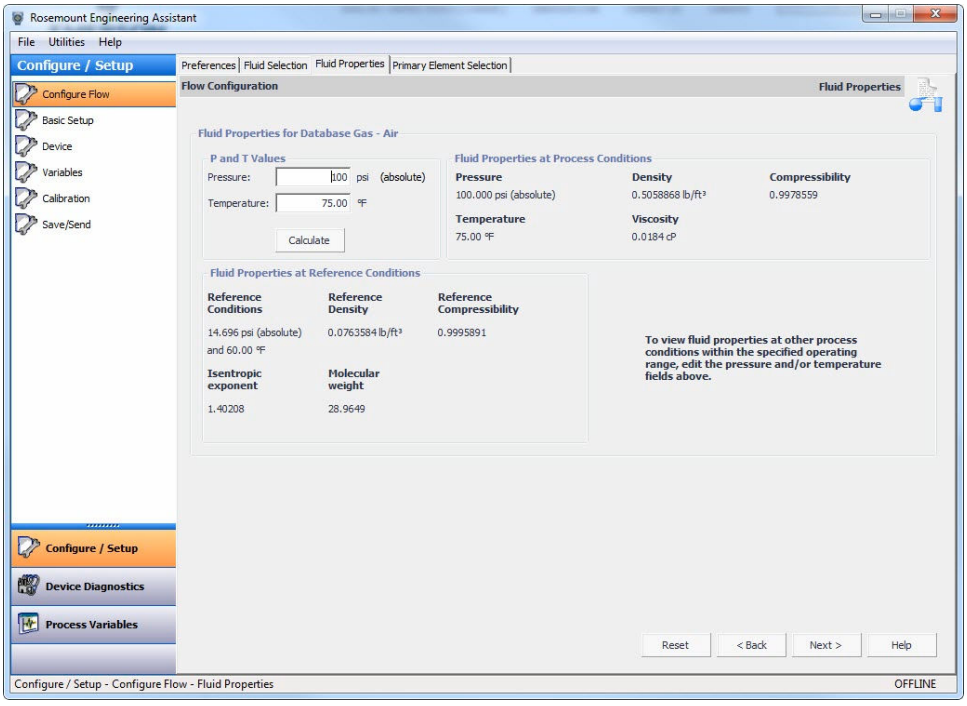

2.4.7 Primary element selection

About this task

The Primary Element Selection tab shown in Figure 2-9 allows the user to select the primary element that will be used with the Rosemount 3051SMV. This database of primary elements includes:

- Rosemount proprietary elements such as the Rosemount Annubar™ and the conditioning orifice plate
- Standardized primary elements such as ASME, ISO, and AGA primary elements
- Other proprietary primary elements

Figure 2-9: Primary Element Selection Tab

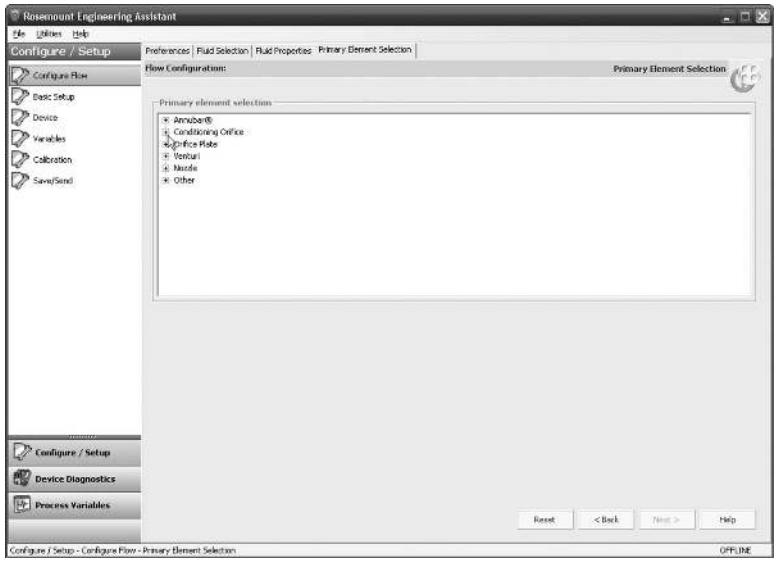

Continuing with the example configuration:

Procedure

1. Expand the Conditioning Orifice category.

Figure 2-10: Primary Element Selection Tab - 405C/3051SFC

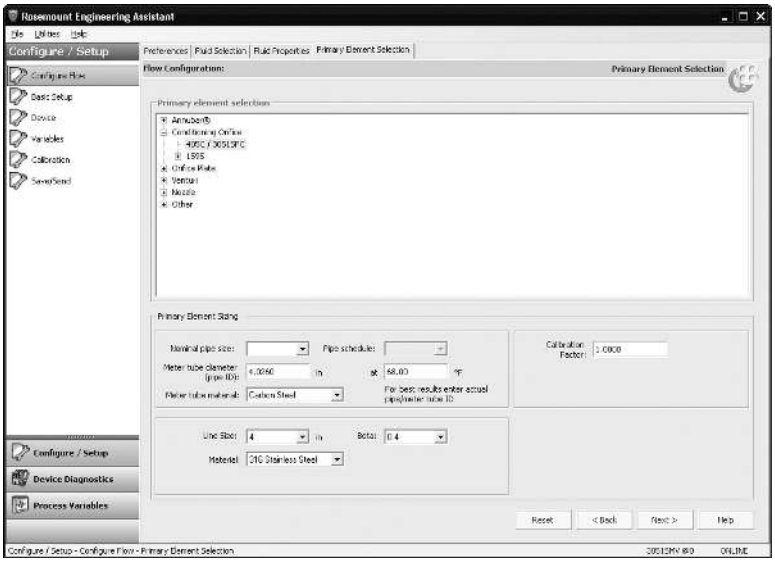

2. Select **405C/3051SFC**.
3. Enter the Measured Meter Tube Diameter (pipe ID) at a Reference Temperature. If the meter tube diameter cannot be measured, select a Nominal Pipe Size and Pipe Schedule to input an estimated value for the meter tube diameter (U.S. units only).
4. If necessary, edit the Meter Tube Material.

5. Enter the Line Size and select the Beta of the Conditioning Orifice Plate. The required primary element sizing parameters will be different depending on what primary element is selected.
6. If necessary, select a Primary Element Material from the drop-down menu.
7. A calibration factor may be entered if a calibrated primary element is being used.

Note
A Joule-Thomson Coefficient can be enabled to compensate for the difference in process temperature between the orifice plate location and the process temperature measurement point. The Joule-Thomson Coefficient is available with ASME MFC-3M-2 (2004) or ISO 5167-2.2003 (E) orifice plates used with Database Gases, Superheated Steam, or AGA DCM/ISO Molar Composition Natural Gas. For more information on the Joule-Thomson Coefficient, reference the appropriate orifice plate standard.

8. Select Next > to advance to the Save/Send Configuration tab.

Example

Note
To be in compliance with appropriate national or international standards, beta ratios and differential producer diameters should be within the limits as listed in the applicable standards. The Engineering Assistant software will alert the user if a primary element value exceeds these limits, but will allow the user to proceed with the flow configuration.

2.4.8 Save/send

About this task

The Save/Send Configuration tab shown in Figure 2-11 allows the user to view, save, and send the configuration information to the Rosemount 3051SMV with the fully compensated mass and energy flow feature board.

Procedure

1. Review the information under the Flow Configuration heading and Device Configuration heading.

Note
For more information on device configuration, see Basic device configuration.

Figure 2-11: Save/Send Configuration Tab (Offline Mode)

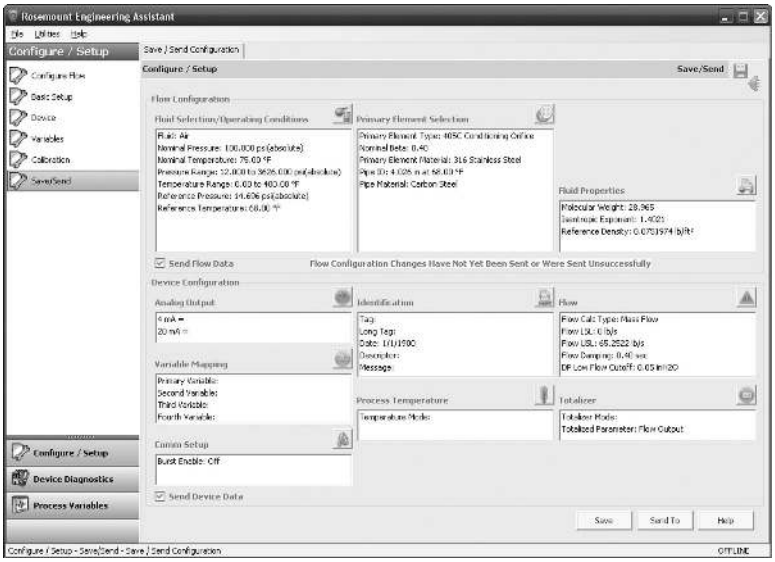

2. Select the icon above each window to be taken to the appropriate screen to edit the configuration information. To return to the Save/Send tab, select Save/Send in the left menu.
3. When all information is correct, see Sending a configuration in offline mode or Sending a configuration in online mode.

Note
The user will be notified if the configuration has been modified since it was last sent to the transmitter. A warning message will be shown to the right of the Send Flow Data and/or Send Device Data check boxes.

Sending a configuration in offline mode

Procedure

1. To send the configuration, select the **Send To** button.

Note
The Send Flow Data and/or Send Device Data check boxes can be used to select what configuration data is sent to the transmitter. If the check box is unselected, the corresponding data will not be sent.

2. The Engineering Assistant Device Connection screen will appear, see Figure 2-12.

Figure 2-12: Engineering Assistant Device Connection Screen

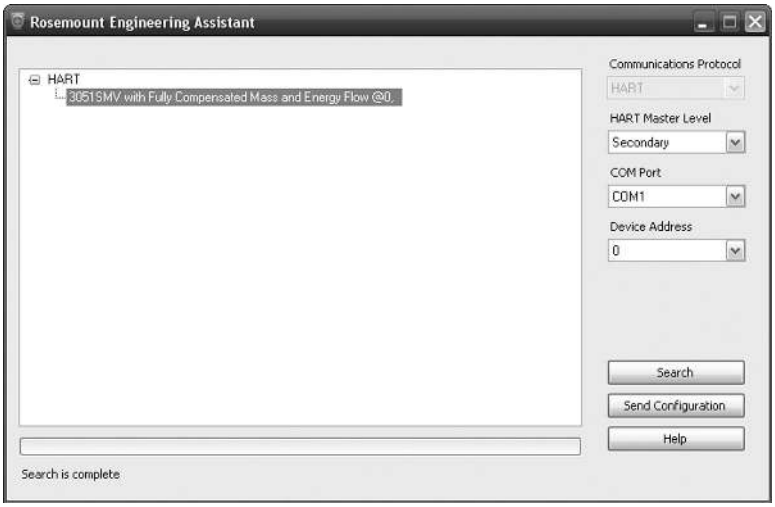

3. Select the **Search** button located in the lower right corner of the screen. Engineering Assistant will begin to search for connected devices.
4. When the search is completed, select the device to communicate with and select **Send Configuration** button.
5. Once the configuration is finished being sent to the device, a notification appears.
6. If finished with the configuration process, close Engineering Assistant.

Note
After the configuration is sent to the device, saving the configuration file is recommended. For more information on saving a configuration file, see Saving a configuration.

Sending a configuration in online mode

Procedure

1. To send the configuration, select the **Send** button. Once the configuration is finished being sent to the device, a notification appears.
2. If finished with the configuration process, close Engineering Assistant.

Note
After the configuration is sent to the device, saving the configuration file is recommended. For more information on saving a configuration file, see Saving a configuration.

Saving a configuration

Procedure

1. To save the configuration, select the **Save** button.

2. Navigate to the save location for the configuration file, give the file a name, and select **Save**. The configuration will be saved as a ".smv" file type.

Sending a saved configuration

Procedure

1. To send a saved configuration, open Engineering Assistant in offline mode and select **File>Open**.
2. Navigate to the saved .smv file to be sent. Select **Open**.
3. The Engineering Assistant Device Connection screen will appear, see Figure 2-12.
4. Select the **Search** button located in the lower right corner of the screen. Engineering Assistant will begin to search for connected devices.
5. When the search is completed, select the device to communicate with and select **Send Configuration** button.
6. Once the configuration is finished being sent to the device, a notification appears.
7. If finished with the configuration process, close Engineering Assistant.

2.4.9 Other fluid configurations

Natural gas AGA No. 8 detail characterization or ISO 12213, molar composition flow configuration

Procedure

1. Expand the Gas category.
2. Expand the Natural Gas category.
3. Select **AGA Report No. 8 Detail Characterization Method** or **ISO 12213, Molar Composition Method**.
4. Select **Next >** to proceed to the Fluid Composition tab. Figure 2-13 shows an example of the Fluid Composition tab for AGA Report No. 8 Detail Characterization Method. The ISO 12213, Molar Composition Method Fluid Composition tab will require the same information.

Figure 2-13: Fluid Composition Tab

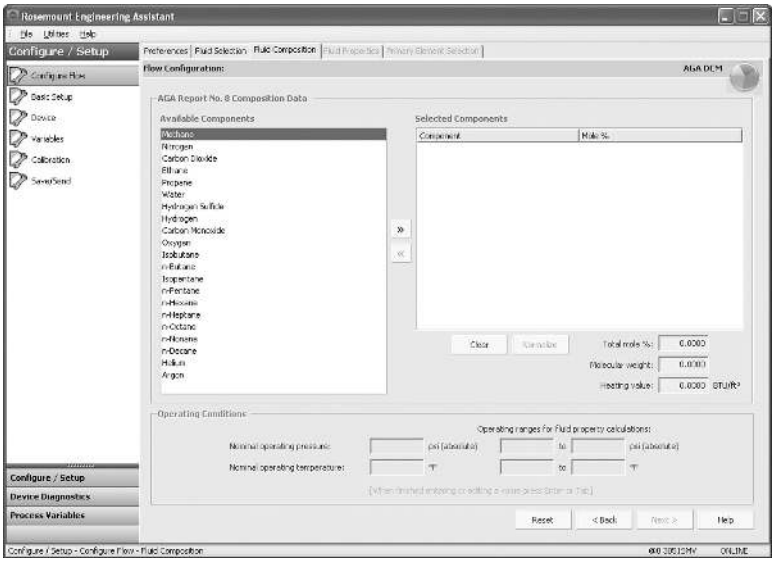

5. In the Available Components window, select the required components and move them into the Selected Components window using the **>>** button. The **<<** button moves the components back to the Available Components window. The Clear button moves all components back to the Available Components window.
6. After all required components are in the Selected Components window, begin assigning the percent composition of each component in the Mole % column.

Note
These percent composition values should add to 100 percent. If they do not, select the **Normalize** button. This will adjust the mole percentages proportionally to a total of 100 percent.

7. Enter the Nominal Operating Pressure, then the Nominal Operating Temperature as the entry blanks become available. Engineering Assistant will automatically fill in suggested operating ranges. These values may be edited by the user.

Note
In order to comply with the AGA requirements the calculation accuracy must be within ±50 ppm (±0.005%). This is stated in AGA Report No. 3, Part 4, Section 4.3.1. The pressure and temperature operating ranges will be autofilled to comply with the standard.

8. Select **Next >**. This will bring the user to the Fluid Properties tab.
9. Proceed with the steps in Fluid properties.

Natural gas AGA No. 8 gross characterization flow configuration method 1, method 2, and natural gas ISO 12213, physical properties (SGERG 88) flow configuration

Procedure

1. Expand the Gas category.
2. Select AGA No. 8 Gross Characterization Method 1, AGA No. 8 Gross Characterization Method 2, or ISO 12213, Physical Properties (SGERG 88).
3. Select Next to proceed to the Fluid Composition tab.
4. Enter the required data for the Natural Gas Characterization Method that was selected in Step 2. Required data for each method is listed in Table 2-3.

Table 2-3: Required and Optional Data for Natural Gas Characterization Methods

Characterization method	Required data	Optional data
AGA Report No. 8 Gross Characterization Method 1	Relative Density (1) Mole Percent CO2 Volumetric Gross Heating Value (2)	Mole Percent CO Mole Percent Hydrogen
AGA Report No. 8 Gross Characterization Method 2	Relative Density (1) Mole Percent CO_2 Mole Percent Nitrogen	Mole Percent CO Mole Percent Hydrogen
ISO 12213, Physical Properties (SGERG 88)	Relative Density (1) Mole Percent CO_2 Volumetric Gross Heating Value (2)	Mole Percent CO Mole Percent Hydrogen

(1) Reference conditions for the relative density are 60 °F (15.56 °C) and 14.73 psia (101.56 kPa).
(2) Reference conditions for the molar gross heating value are 60 °F (15.56 °C) and 14.73 psia (101.56 kPa) and reference conditions for molar density are 60 °F (15.56 °C) and 14.73 psia (101.56 kPa).

5. If appropriate, enter the optional data for the Natural Gas Characterization Method that was selected in Step 2. Optional data for each method is listed in Table 2-3.
6. Enter the Nominal Operating Pressure, then the Nominal Operating Temperature as the entry blanks come available. Engineering Assistant will automatically fill in suggested operating ranges. Note that these values may be edited by the user.
7. Select **Next**. This will open the Fluid Properties tab.
8. Proceed with the steps in Fluid properties.

Ideal gas

The ideal gas option should be used when the fluid behavior can be modeled by the ideal gas law. This option uses a modified version of the ideal gas law with a constant value of compressibility. The default value for compressibility is 1.00 but it may be edited by the user. To use an ideal gas enter in the operating pressure and temperature followed by either the density, specific gravity, or molecular weight.

Procedure

1. Expand the GAS category.
2. Select the **Ideal Gas** option.
3. Enter the Nominal Operating Pressure and Temperature Ranges. Engineering Assistant will use these ranges to identify the pressure and temperature values at which the fluid properties are required.

   For the ideal gas being used the nominal density, specific gravity, or molecular weight must now be entered using the drop-down menu. Once these are entered the other data entry fields, compressibility and viscosity, are enabled as shown on Figure 2-14.

Figure 2-14: Fluid Selection Ideal Gas

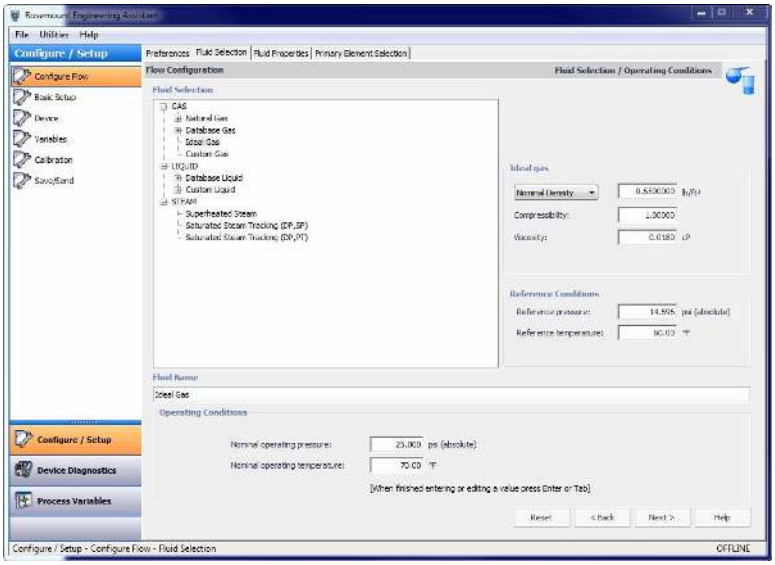

4. Adjust the compressibility and viscosity to fit the ideal gas of the process.
5. Select **Next** to proceed to the Fluid Properties tab.

Note
The Fluid Properties tab is an optional step and is not required to complete a flow configuration. The Fluid Properties tab for the database gas air is shown in Figure 2-15. The user may view the properties of the chosen fluid. The fluid properties are initially shown at nominal conditions. To view density, compressibility, and viscosity of the selected fluid at other pressure and temperature values, enter a Pressure and Temperature and select Calculate. Changing the pressure and temperature values on the Fluid Properties tab does not affect the flow configuration.

Figure 2-15: Fluid Properties Tab

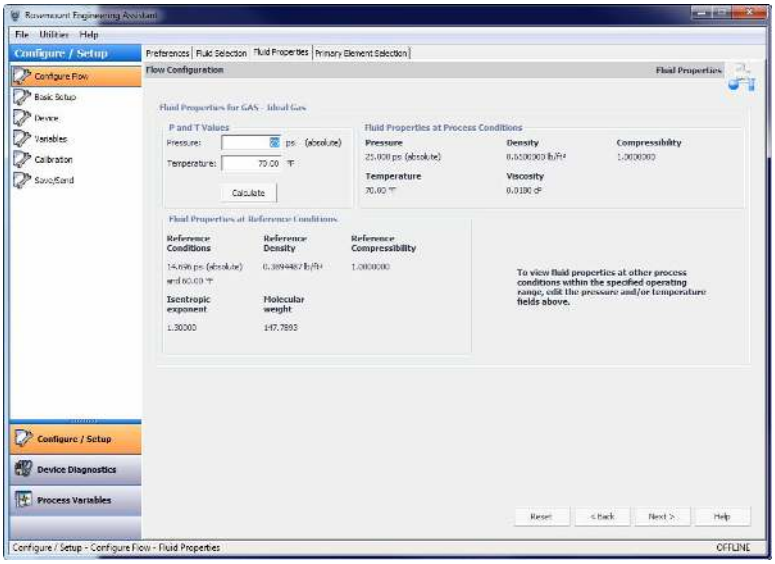

6. Select **Next** to continue with the flow configuration on the Primary Element Selection tab.
7. Proceed with the steps in Primary element selection.

Custom gas

About this task

The custom gas option should be used for fluids not in the database such as proprietary fluids or gas mixtures. To properly calculate the fluid properties, the compressibility factor or density needs to be entered at specific pressure and temperature values based on the operating ranges entered by the user. The pressure and temperature values may be edited as needed. The editable values are shown in fields with white backgrounds. For best performance, it is recommended that, whenever possible, the compressibility or density values be entered at the suggested pressure and temperature values.

To ease entering the compressibility/density or viscosity values, data can be copied from a spreadsheet and pasted into the grid. The recommended process is to copy the pressure and temperature values from the table on the Engineering Assistant screen to assist in computing the density or compressibility values. Once the compressibility or density values are computed, they may then be copied from the spreadsheet and pasted into the grid on the Custom Gas Fluid Properties tab.

Procedure

1. Expand the Gas category.
2. Select the **Custom Gas** option.
3. Enter the Nominal Operating Pressure and Temperature Ranges. Engineering Assistant will use these ranges to identify the pressure and temperature values at which the fluid properties are required.
4. Select **Next** to proceed to the Custom Gas Fluid Properties tab.

5. Enter the Molecular Weight of the Custom Gas. When the molecular weight of the gas is entered, the other data entry fields on the tab are enabled as shown in Figure 2-16.
6. Select either **Density** or **Compressibility** and enter data.

Note
All pressure and temperature values may be edited except the minimum and maximum values. The minimum and maximum values were set on the Fluid Selection tab.

7. Enter the Density or Compressibility at reference conditions.
8. Enter the Custom Gas Viscosity at the given temperatures. Note that all temperature values may be edited except the minimum and maximum temperatures.
9. Enter the Custom Gas Isentropic Exponent.
10. Select **Next** to continue with the flow configuration on the Primary Element Selection tab.
11. Proceed with the steps in Primary element selection.

Figure 2-16: Custom Gas Fluid Properties Tab

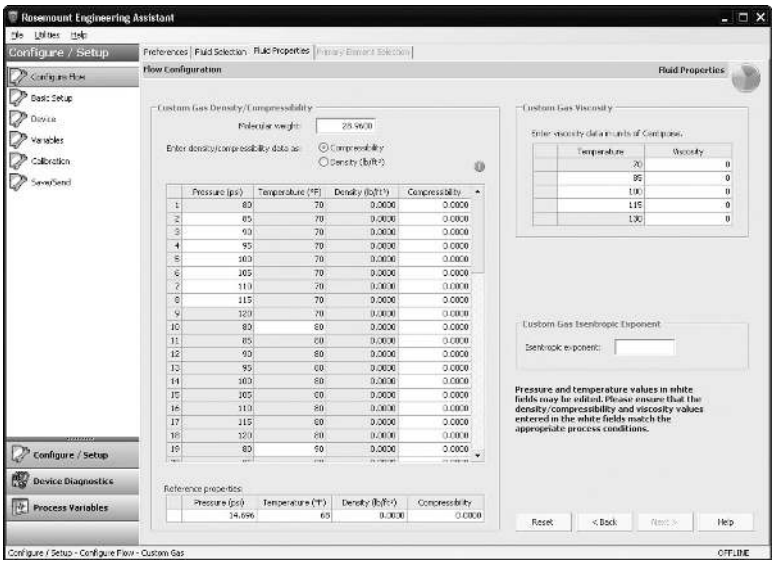

Custom liquid (Density [T])

About this task

The Custom Liquid option should be used for fluids not in the database such as proprietary fluids.

Procedure

1. Expand the Liquid category.
2. Expand the Custom Liquid category.

3. Select the **Custom Liquid (Density [T])** option.
4. Enter the Nominal and Operating Temperature Range. Engineering Assistant will use this range to identify the temperature values at which the fluid properties are required.
5. Select **Next** to continue the flow configuration on the Fluid Properties tab.
6. Enter the Custom Liquid Density at the given temperatures.

Note
All temperature values may be edited except the minimum and maximum temperatures.

7. Enter the Reference Density at the reference temperature.
8. Enter the Custom Liquid Viscosity at the given temperatures. Note that all temperature values may be edited except the minimum and maximum temperatures. The minimum and maximum values were set on the Fluid Selection tab.
9. Proceed with the steps in Primary element selection.

Figure 2-17: Custom Liquid (Density [T]) Fluid Properties Tab

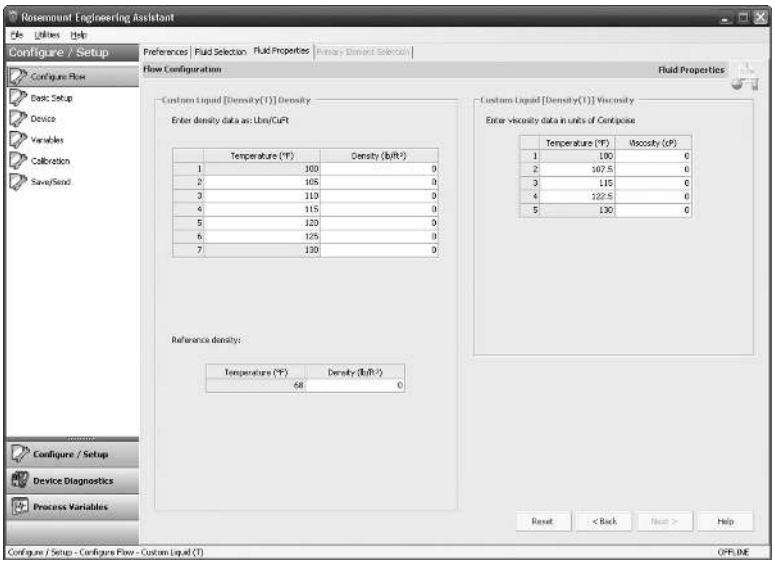

2.5 Basic device configuration

Mass and energy flow Fast Keys	1, 3
Direct process variable output Fast Keys	1, 3

This section provides procedures for configuring the basic requirements to commission the Rosemount 3051SMV. The Basic Setup tab, shown in Figure 2-18, can be used to perform all of the required transmitter configuration. The complete list of Field Communicator Fast Keys for basic setup are shown in Field Communicator Fast Keys.

Based on the configuration ordered, some measurements (i.e. static pressure, process temperature) and/or calculation types (i.e. mass, volumetric, and energy flow) may not be available for all fluid types. Available measurements and/or calculation types are determined by the multivariable type and measurement type codes ordered. See Ordering information for more information.

All screens in this section are shown for multivariable type M (fully compensated mass and energy flow) with measurement type 1 (differential pressure, static pressure, and process temperature). Field Communicator Fast Keys are given for both multivariable type M and P (direct process variable output) with measurement type 1. Field Communicator Fast Keys and screens for other multivariable types and measurement types may vary.

Note

All screen shots in this section will be shown using AMS Device Manager. Engineering Assistant screens are similar and the instructions shown here apply to both AMS Device Manager and Engineering Assistant.

When using Engineering Assistant, a Reset Page button will be shown. In online mode, the Reset Page button will return all values on tab to the initial values received from the device before the start of the configuration. If editing a previously saved configuration, the Reset Page button will return all values on tab to those that were last saved. If starting a new configuration, all entered values on tab will be erased.

⚠ CAUTION

When information is edited on any AMS Device Manager tab, it will be highlighted in yellow. Edited information is not sent to the transmitter until the Apply or OK button is selected.

2.5.1 Units of measure

If a unit of measure is edited and the Apply button is selected, the unit of measure will be changed in the device memory and on screen, but the value may take up to 30 seconds to be updated on the AMS Device Manager screen.

Figure 2-18: Basic Setup Tab

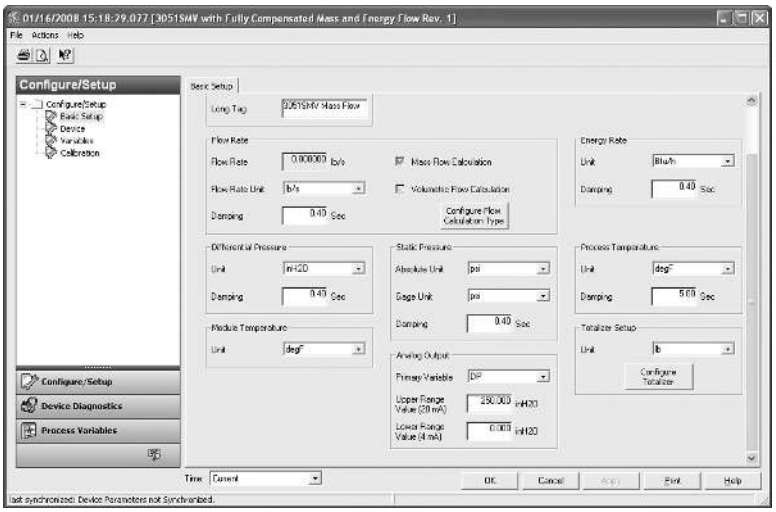

- Verify the Device Tag information. The tag information is used to identify specific transmitters on the 4–20 mA loop. This tag information may be edited.
- Under the Flow Rate heading (fully compensated mass and energy flow feature board only), the type of flow calculation (mass or volumetric) is displayed by the indicators on the right side of the box. The Flow Calculation Type may be edited by selecting the Configure Flow Calculation Type button. The Damping and Units of the Flow Rate may also be edited under this heading.

Note
The flow calculation within the device uses undamped process variables. Flow rate damping is set independently of measured process variables.

- Under the Energy Rate heading (fully compensated mass and energy flow feature board only), the Units and Damping for the Energy Rate may be edited.

Note
Energy rate calculations are only available for steam and natural gas. The energy rate calculation within the device uses undamped process variables. Energy rate damping is set independently of flow rate damping or measured process variables.

- Under the Differential Pressure heading, the Units and Damping for the Differential Pressure may be edited.
- Under the Static Pressure heading, the Units for both absolute and gage pressure and static pressure Damping may be edited.

Note
Both absolute and gage pressure are available as variables. The type of transmitter ordered will determine which variable is measured and which is calculated based on the user

defined atmospheric pressure. For more information on configuring the atmospheric pressure, see Static pressure. Since only one of the static pressures is actually being measured, there is a single damping setting for both variables which may be edited under the Static Pressure heading.

- Under the Process Temperature heading, the Units and Damping for the Process Temperature may be edited.
- Under the Module Temperature heading, the Units for the sensor module temperature may be set. The sensor module temperature measurement is taken within the module, near the differential pressure and/or static pressure sensors and can be used to control heat tracing or diagnose device overheating.
- Under the Analog Output heading, the primary variable can be selected from the drop down menu and the upper and lower range values (4 and 20 mA points) for the primary variable may be edited.
- Under the Totalizer heading (fully compensated mass and energy flow feature board only), the Totalizer can be configured by selecting the **Configure Totalizer** button. This button allows the user to select the variable to be totalized. The Totalizer Units may also be edited under this heading.

2.6 Detailed device configuration

2.6.1 Model identification

Mass and energy flow Fast Keys	1, 3, 5
Direct process variable output Fast Keys	1, 3, 5

The Identification tab displays the device identification information on one screen. The fields with white backgrounds may be edited by the user.

Figure 2-19: Device - Identification Tab

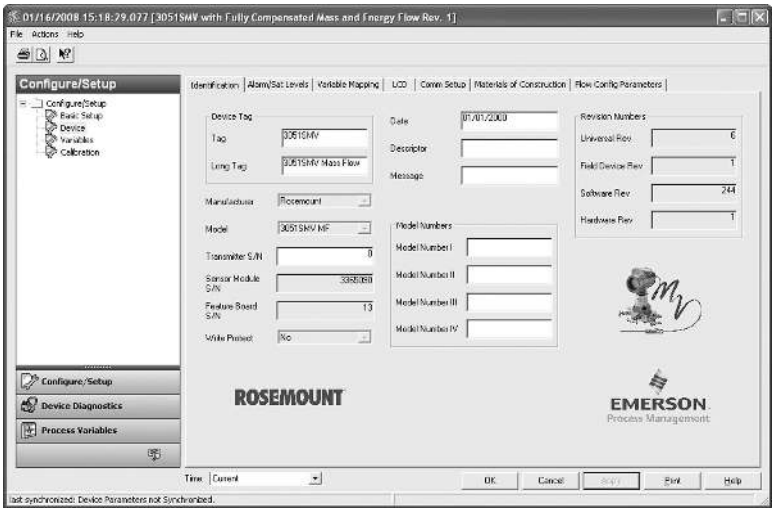

2.6.2 Alarm and saturation

The Rosemount 3051SMV automatically and continuously performs self-diagnostic routines. If the self-diagnostic routines detect a failure, the transmitter drives the output to the configured alarm value. The transmitter will also drive the output to configured saturation values if the primary variable goes outside the 4–20 mA range values.

The alarm and saturation settings can be configured using Engineering Assistant, AMS Device Manager, or a Field Communicator. See Alarm and saturation level configuration for more information. The alarm direction can be configured using the hardware switch on the feature board. See Configure security (write protect) for more information on the hardware switch.

The Rosemount 3051SMV has three options for alarm and saturation levels:

- Rosemount (Standard), see Table 2-4
- NAMUR, see Table 2-5
- Custom (user-defined), see Table 2-6

Table 2-4: Rosemount (Standard) Alarm and Saturation Values

Level	Saturation	Alarm
Low	3.9 mA	≤ 3.75 mA
High	20.8 mA	≥ 21.75 mA

Table 2-5: NAMUR-Compliant Alarm and Saturation Values

Level	Saturation	Alarm
Low	3.8 mA	≤ 3.6 mA
High	20.5 mA	≥ 22.5 mA

Table 2-6: Custom Alarm and Saturation Values

Level	Saturation	Alarm
Low	3.7 mA — 3.9 mA	3.6 mA — 3.8 mA
High	20.1 mA — 22.9 mA	20.2 mA — 23.0 mA

The following limitations exist for custom levels:

- Low alarm level must be less than the low saturation level
- High alarm level must be higher than the high saturation level
- Alarm and saturation levels must be separated by at least 0.1 mA

Alarm and saturation level configuration

Mass and energy flow Fast Keys	1, 4, 2, 6, 6
Direct process variable output Fast Keys	1, 4, 2, 6, 6

The Alarm/Sat Levels tab allows the Alarm and Saturation Levels to be configured. To change alarm/saturation level settings, select the **Config Alarm/Sat Levels** button.

Figure 2-20: Device - Alarm/Sat Levels Tab

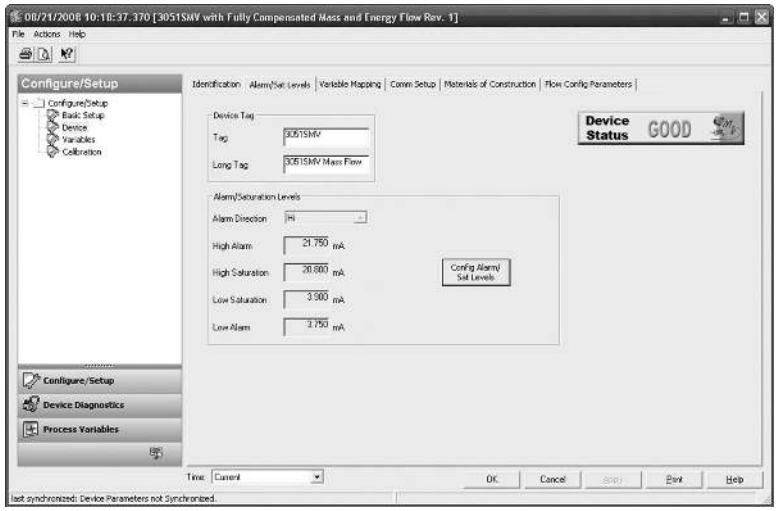

Alarm level verification

The transmitter alarm level should be verified before returning the transmitter to service if alarm and saturation levels are changed.

This feature is also useful in testing the reaction of the control system to a transmitter in an alarm state. To verify the transmitter alarm values, perform a loop test and set the transmitter output to the alarm value (see Alarm and saturation and Analog output loop test).

Variable saturation behavior

The analog output of the Rosemount 3051SMV may respond differently based on which measurement goes outside the sensor limits. This response will also depend on the device configuration. Table 2-7 lists the behaviors of the analog output under different conditions.

Table 2-7: Variable Saturation Behavior

Primary variable	Action	Analog output behavior
Flow or Energy Flow	Differential Pressure goes outside the sensor limits	Analog output goes to high or low saturation
Flow or Energy Flow	Absolute Pressure or Gage Pressure goes outside the sensor limits	Analog output does not saturate
Flow or Energy Flow	Process Temperature goes outside the user defined sensor limits	Temperature mode is Normal: Analog output goes into high or low alarm. Temperature Mode is Backup: The Process Temp will go into backup mode and be fixed at the user defined value. Analog output will not saturate or go into alarm.

Table 2-7: Variable Saturation Behavior *(continued)*

Primary variable	Action	Analog output behavior
DP	Differential Pressure goes outside the sensor limits	Analog output goes to high or low saturation
AP or GP	Absolute Pressure or Gage Pressure goes outside the sensor limits	Analog output goes to high or low saturation
Process Temp	Process Temperature goes outside the user defined sensor limits	Direct process variable output: Analog output goes to high or low saturation Mass and Energy Flow: Analog output goes to high or low alarm

2.6.3 Variable mapping

Mass and energy flow Fast Keys	1, 4, 3, 4
Direct process variable output Fast Keys	1, 4, 3, 4

The Variable Mapping tab is used to define which process variable will be mapped to each HART variable. The primary variable represents the 4–20 mA analog output signal while the 2nd, 3rd, and 4th variables are digital. To edit the variable assignments, select the appropriate process variables from the drop-down menus and select **Apply**.

Figure 2-21: Device - Variable Mapping Tab

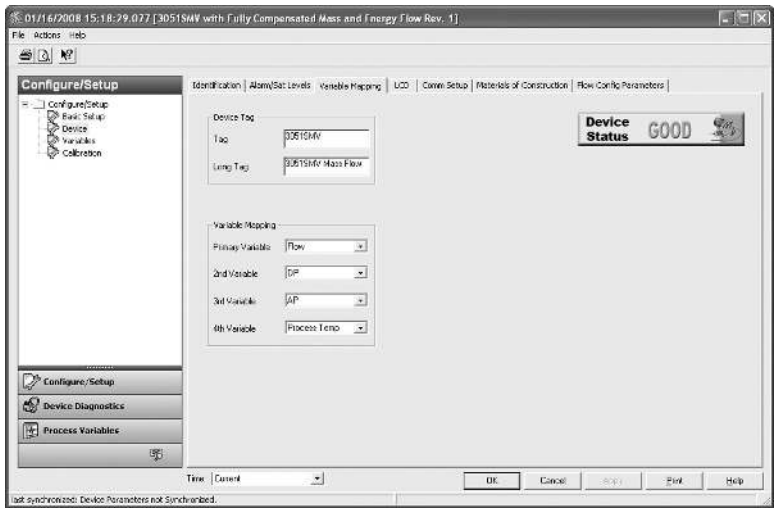

2.6.4 LCD display

Mass and energy flow Fast Keys	1, 3, 8
Direct process variable output Fast Keys	1, 3, 8

The LCD display features a four-line display and a 0–100 percent scaled bar graph. The first line of five characters displays the output description, the second line of seven digits

displays the actual value, and the third line of six characters displays engineering units. The fourth line displays “Error” when there is a problem detected with the transmitter. The LCD display can also show diagnostic messages. These diagnostic messages are listed in Table 5-1.

The LCD tab allows the user to configure which variables will be shown on the LCD display. Select the check box next to each variable to select a variable for display. The transmitter will scroll through the selected variables, showing each for three seconds.

Figure 2-22: Device - LCD Tab

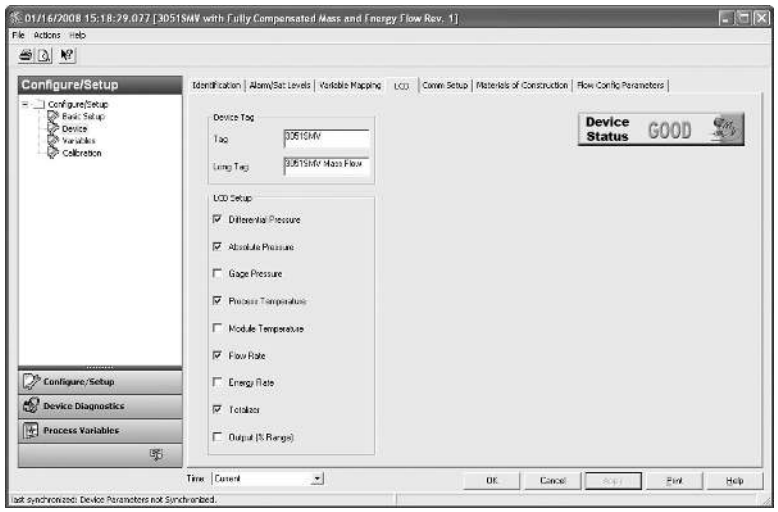

2.6.5 Communication setup

Mass and energy flow Fast Keys	1, 4, 3, 3
Direct process variable output Fast Keys	1, 4, 3, 3

The Comm Setup tab allows the settings for burst mode and multidrop communications to be configured.

Figure 2-23: Device - Comm Setup Tab

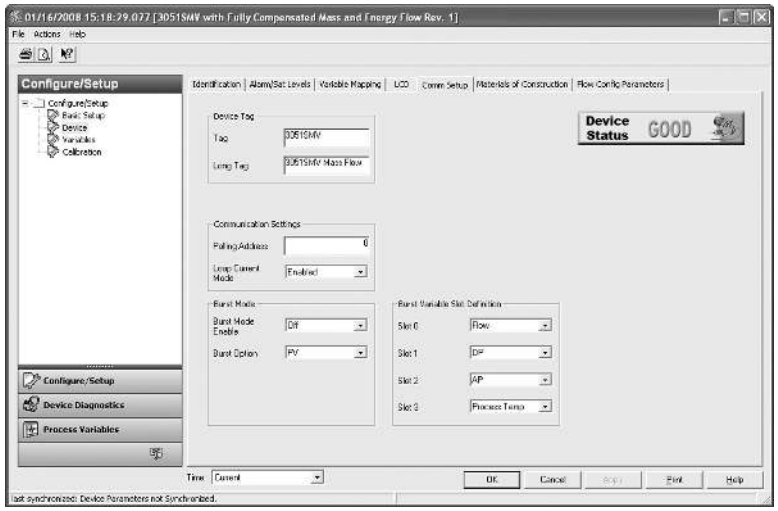

Burst mode

When Burst Mode Enable is set to on, the Rosemount 3051SMV sends up to four HART variables to the control system without the control system polling for information from the transmitter.

When operating with Burst Mode Enable set to on, the transmitter will continue to output a 4–20 mA analog signal. Because the HART protocol features simultaneous digital and analog data transmission, the analog value can drive other equipment in the loop while the control system is receiving the digital information. Burst mode applies only to the transmission of dynamic data (process variables in engineering units, primary variable in percent of range, and/or analog output), and does not affect the way other transmitter data is accessed.

Access to information that is not burst can be obtained through the normal poll/response method of HART communication. A Field Communicator, AMS Device Manager, Engineering Assistant, or the control system may request any of the information that is normally available while the transmitter is in burst mode.

Enabling burst mode

Mass and energy flow Fast Keys	1, 4, 3, 3, 3
Direct process variable output Fast Keys	1, 4, 3, 3, 3

To enable burst mode, select **On** from the Burst Mode Enable drop-down menu under the Burst Mode heading.

Choosing a burst option

Mass and energy flow Fast Keys	1, 4, 3, 3, 4
Direct process variable output Fast Keys	1, 4, 3, 3, 4

This parameter selects the information to be burst. Make a selection from the Burst Option drop-down menu under the Burst Mode heading. The Dyn vars/current option is the most common, because it is used to communicate with the Rosemount 333 HART Tri-Loop™ .

Table 2-8: Burst Options

HART command	Burst option	Description
1	PV	Primary variable
2	% range/current	Percent of range and milliamp output
3	Dyn vars/current	All process variables and milliamp output
9	Device vars w/ status	Burst variables and status information
33	Device variables	Burst variables

Choosing burst variable slot definition

Mass and energy flow Fast Keys	1, 4, 3, 3, 5
Direct process variable output Fast Keys	1, 4, 3, 3, 5

If the burst option Device vars w/ status or Device variables is selected, the user may select the four variables that will be burst. These are defined in slots 1–4 under the Burst Variable Slot Definitions heading. The variables defined in slots 1–4 can be different than the variables mapped to the primary, 2nd, 3rd, and 4th variable outputs.

Multidrop communication

Multidropping transmitters refers to the connection of several transmitters to a single communications transmission line.

Note
Figure 2-24 shows a typical multidrop network. This figure is not intended as an installation diagram.

Communication between the host and the transmitters takes place digitally with the analog output of the transmitters deactivated.

Note
A transmitter in multidrop mode with Loop Current Mode disabled has the analog output fixed at 4 mA.

Figure 2-24: Typical Multidrop Network

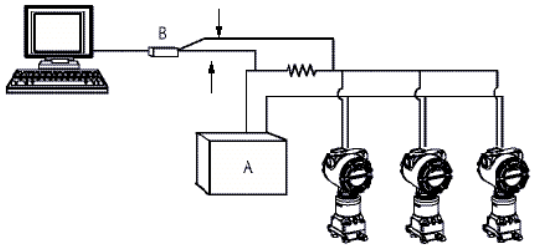

A. Power supply
B. HART modem

Enable multidrop communication

Mass and energy flow Fast Keys	1, 4, 3, 3, 1
Direct process variable output Fast Keys	1, 4, 3, 3, 1

The Rosemount 3051SMV is set to address zero (0) at the factory, which allows operation in the standard point-to-point manner with a 4–20 mA output signal. To activate multidrop communication, the transmitter address must be changed to 1–15 for HART 5 hosts or 1–63 for HART 6 hosts. This change deactivates the 4–20 mA analog output, sending it to a fixed value of 4 mA. It also disables the failure alarm signal, which is controlled by the HI/LO alarm switch position on the feature board. Failure signals in multidropped transmitters are communicated through HART messages.

Loop current mode

Mass and energy flow Fast Keys	1, 4, 3, 3, 2
Direct process variable output Fast Keys	1, 4, 3, 3, 2

When using multidrop communication, the loop current mode drop-down menu defines how the 4–20 mA analog output behaves. When loop current mode is disabled, the analog output will be fixed at 4 mA. When the loop current mode is enabled, the analog output will follow the primary variable.

2.6.6 Materials of construction

Mass and energy flow Fast Keys	1, 4, 4, 2
Direct process variable output Fast Keys	1, 4, 4, 2

The Materials of Construction tab allows the materials of construction, remote seal, and equipped sensor information to be viewed. The parameters shown in white boxes may be edited by the user, but do not affect the operation of the device.

Figure 2-25: Device - Materials of Construction Tab

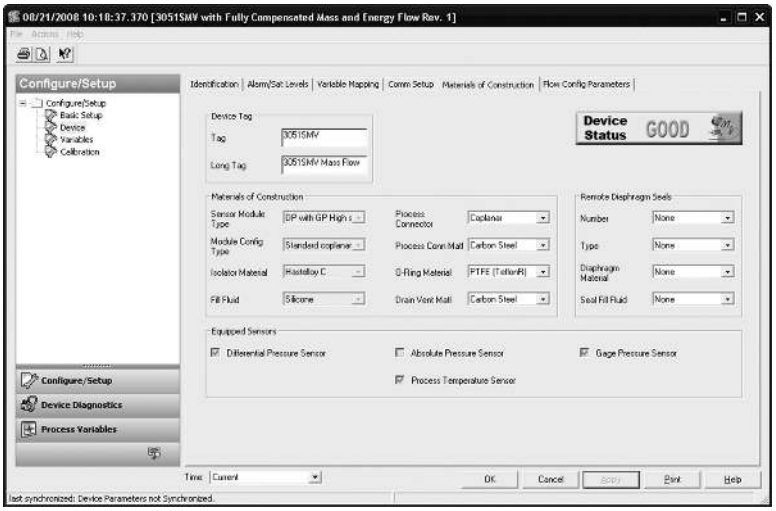

2.6.7 Flow configuration parameters

Mass and energy flow Fast Keys	1, 4, 4, 3

(Fully compensated mass and energy flow feature board only)

The Flow Config Parameters tab allows the Process Fluid, Primary Element type and Pipe Diameter used in the flow configuration to be viewed. These values may only be edited using Engineering Assistant version 6.3 or later.

Figure 2-26: Device - Flow Config Parameters Tab

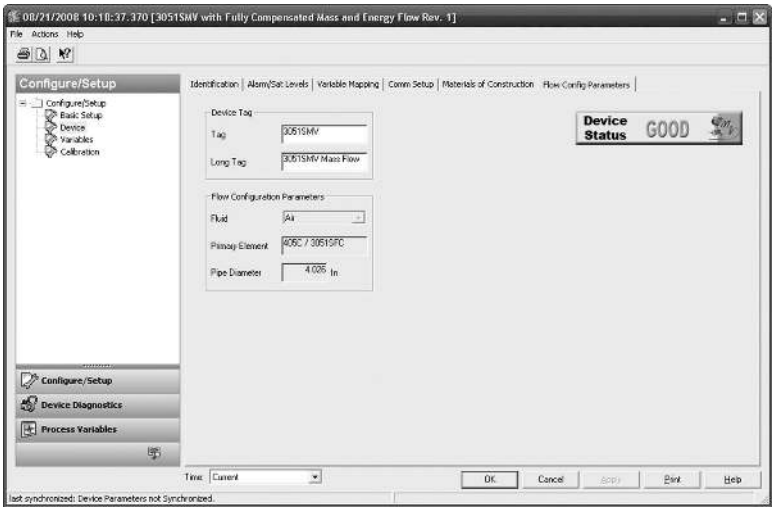

2.7 Variable configuration

2.7.1 Flow rate

About this task

Mass and energy flow Fast Keys	1, 4, 1, 1

(Fully compensated mass and energy flow feature board only)

The Flow tab is used to configure the settings associated with the Flow Variable. Fluid and primary element information which defines the flow calculation is configured using Engineering Assistant.

Figure 2-27: Variables - Flow Tab

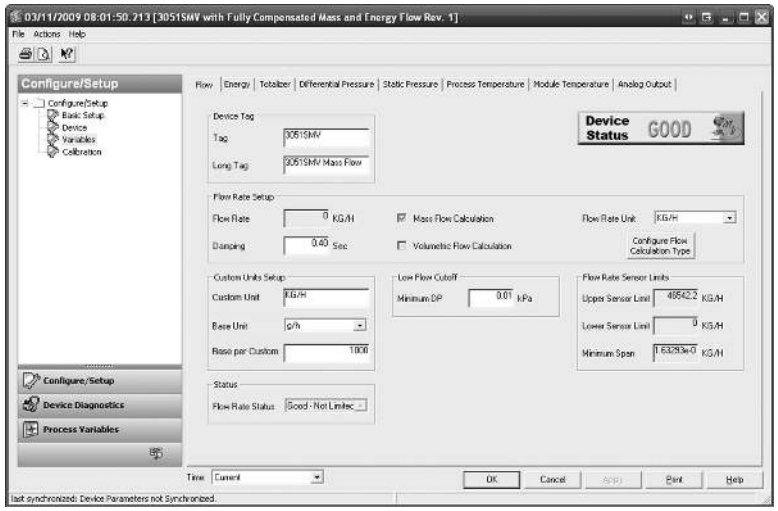

- Under the Flow Rate Setup heading, the type of flow calculation is indicated by the check boxes next to either Mass Flow Calculation or Volumetric Flow Calculation. To edit the flow calculation type, select the **Configure Flow Calculation Type** button.
- Edit the Flow Rate Units and Damping value as needed. The flow calculation within the device uses undamped process variables. Flow rate damping is set independently of the measured process variables.

Note
If the flow calculation type is changed, the totalizer will be stopped and reset automatically.

- Under the Low Flow Cutoff heading, edit the current Minimum DP Value as needed. The unit for this value is the user-selected DP unit. If the measured DP value is less than the minimum DP value, the transmitter will calculate the Flow Rate value to be zero.
- The Sensor Limits and Minimum Span can be viewed under the Flow Rate Sensor Limits heading.

Note
If the flow rate is configured as the primary variable and is being output via the 4–20 mA signal, verify the 4–20 mA range (LRV and URV) after completing the custom unit configuration. For more information on verifying the 4–20 mA range, see Basic device configuration.

Follow these steps to configure a custom unit:

Procedure

1. Custom Unit: Enter the desired custom unit label to be displayed for the flow rate. Up to five characters including letters, numbers, and symbols can be entered in the custom unit field.

   Note
   It is recommended that the Custom Unit be entered in upper case letters. If lower case letters are entered, the LCD display will show upper case letters. Additionally, the following special characters are recognized by the LCD display: hyphens (“-”), percent symbols (“%”), asterisks (“*”), forward slashes (“/”) and spaces. Any other character entered for the Custom Unit will be displayed as an asterisk (“*”) on the LCD display. The following warning will be returned indicating these changes: “Custom Unit contains characters that will display in upper case or asterisks on LCD display. The DCS will display as entered.”

2. Base Unit: From the drop-down menu, select a base unit to be used for the custom unit relationship.
3. Base per Custom: Enter a numeric value that represents the number of base units per one custom unit. The Rosemount 3051SMV uses the following convention: Base per Custom = $\frac{\text{Number of Base Units}}{\text{1 Custom Unit}}$

   Example

   Custom Unit: kg Base Unit: g

   Because:

   1 kg (Kilogram) = 1000 g (Grams)

   Base per Custom = $\frac{\text{Number of Base Units}}{\text{1 Custom Unit}} = \frac{1000 \cdot \text{g}}{1 \cdot \text{kg}} = 1000$

   The values of Base per Custom for common flow units are shown in Table 2-9.

4. Select **Apply**.
5. **Flow Rate Unit**: From the drop-down menu, select the custom unit that was created in Step 2.

Results

Note
The custom unit may not be available as a selection in the Flow Rate Unit drop-down menu until the drop-down menu is refreshed. To refresh the drop- down menu, navigate to the Basic Setup tab and then return to the Variables - Flow tab.

Table 2-9: Common Custom Units - Flow

Custom unit	Base unit	Base per custom
Barrels per Minute (BBL/M)	bbl/h	60
Cubic Meters per Day (CUM/D)	Cum/h	0.041667
Millions of Cubic Meters per Day (MMCMD)	Cum/h	41666.7
Millions of Gallons per Day (MGD)	gal/d	1000000
Millions of Liters per Day (MML/D)	L/h	41666.7
Millions of Standard Cubic Feet per Day (MMCFD)	StdCuft/min	694.444
Normal Cubic Meters per Day (NCM/D)	NmlCum/h	0.041667
Normal Cubic Meters per Minute (NCM/M)	NmlCum/h	60
Short Tons per Day (STOND)	lb/d	2000
Short Tons per Hour (STONH)	lb/h	2000
Standard Cubic Feet per Day (SCF/D)	StdCuft/min	0.000694
Standard Cubic Feet per Hour (SCF/H)	StdCuft/min	0.016667
Standard Cubic Feet per Second (SCF/S)	StdCuft/min	60
Standard Cubic Meters per Day (SCM/D)	StdCum/h	0.041667
Thousands of Gallons per Day (KGD)	gal/d	1000
Thousands of Pounds per Hour (KLB/H)	lb/h	1000
Thousands of Standard Cubic Feet per Day (KSCFD)	StdCuft/min	0.694444
Thousands of Standard Cubic Feet per Hour (KSCFH)	StdCuft/min	16.6666

If conversion factor tables or internet search engines are used to determine the Base per Custom value, it is important to enter the Custom Unit in the “From” field and the Base Unit in the “To” Field. An example of this is shown below:

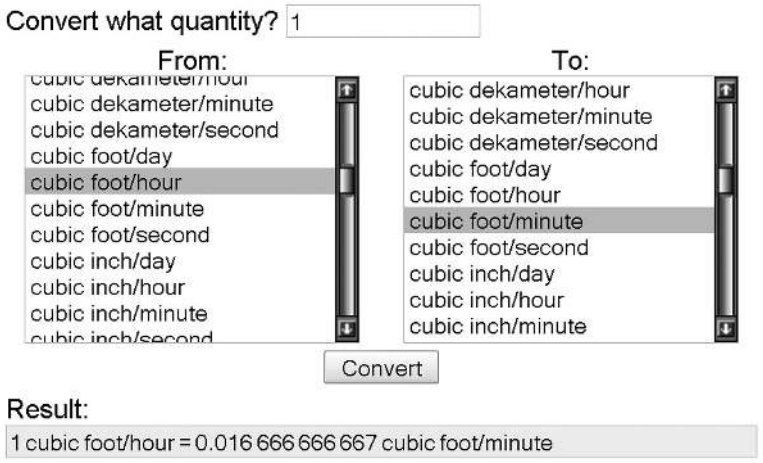

To calculate the Base per Custom value for a custom unit not shown in Table 2-9, see one of the following examples:

- Mass/volume conversion example: Mass/volume conversion example
- Time conversion example: Time conversion example
- Mass/volume and time conversion example: Mass/volume and time conversion example

Mass/volume conversion example

To find the Base per Custom relationship for a custom unit of kilograms per hour (kg/h) and a base unit of grams per hour (g/h), input the following:

Custom Unit = kg/h Base Unit = g/h

Because:

1 kg (Kilogram) = 1000 g (Grams)

Then: 1 kg/h = $\frac{1 \cdot kg}{1 \cdot h} \times \frac{1000 \cdot g}{1 \cdot kg}$ = 1000 g/h

1 kg/h = 1000 g/h

Therefore:

Base per Custom = $\frac{\text{Number of Base Units}}{\text{1 Custom Unit}} = \frac{1000 \cdot g/h}{1 \cdot kg/h}$ = 1000

Figure 2-28: Flow Rate Custom Units - Mass/Volume Conversion Example

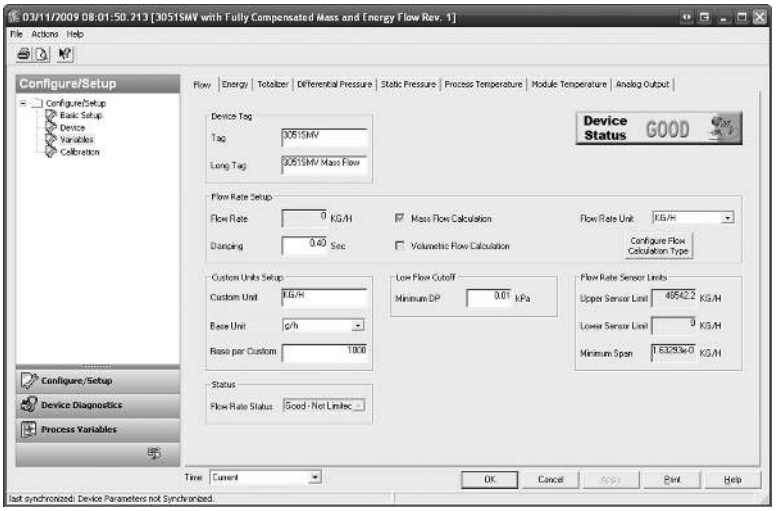

Time conversion example

To find the Base per Custom relationship for a custom unit of standard cubic feet per hour (scf/h) and a base unit of standard cubic feet per minute (StdCuft/min), input the following:

Custom Unit = scf/h Base Unit = StdCuft/min

Because:

1 h (Hour) = 60 min (Minutes)

Then: 1 scf/h = $\frac{1 \cdot scf}{1 \cdot h} \times \frac{1 \cdot h}{60 \cdot min}$ = 0.016667 StdCuft/min

1 scf/h = 0.016667 StdCuft/min

Therefore:

Base per Custom = $\frac{Number\ of\ Base\ Units}{1\ Custom\ Unit} = \frac{0.016667 \cdot StdCuft/min}{1 \cdot scf/h}$ = 0.016667

Figure 2-29: Flow Rate Custom Units - Time Conversion Example

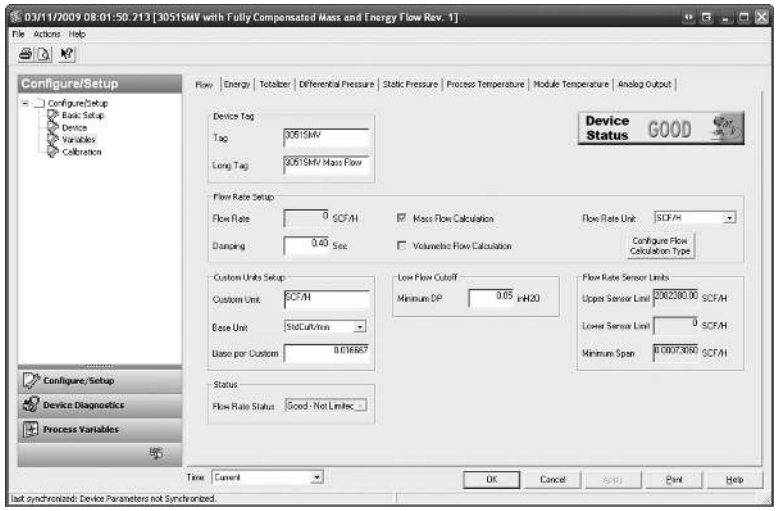

Mass/volume and time conversion example

To find the Base per Custom relationship for a custom unit of standard millions of standard cubic feet per day (mmcfd) and a base unit of standard cubic feet per minute (StdCuft/min), input the following:

Custom Unit = mmcfd Base Unit = StdCuft/min

Because:

1 mmcf (Millions of Standard Cubic Feet) = 1000000 StdCuft (Standard Cubic Feet) and

1 d (Day) = 1440 min (Minutes)

Then:

1 mmcfd = $\frac{1 \cdot mmcf}{1 \cdot d} \times \frac{1000000 \cdot StdCuft}{1 \cdot mmcf} \times \frac{1 \cdot d}{1440 \cdot min}$ = 694.444 StdCuft/min

1 mmcfd = 694.444 StdCuft/min

Therefore:

Base per Custom = $\frac{Number\ of\ Base\ Units}{1\ Custom\ Unit} = \frac{694.444 \cdot StdCuft/min}{1 \cdot mmcfd}$ = 694.444

Figure 2-30: Flow Rate Custom Units - Mass/Volume and Time Conversion Example

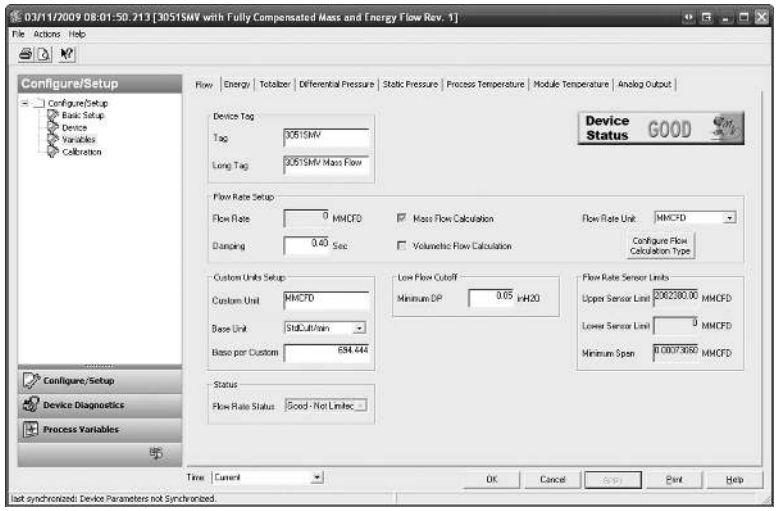

Under the Custom Units Setup heading, the user may configure a custom unit for the flow rate measurement. Custom units allow the flow rate to be displayed in units of measure that are not standard in the Rosemount 3051SMV.

2.7.2 Energy rate

About this task

Mass and energy flow Fast Keys	1, 4, 1, 2

(Fully compensated mass and energy flow feature board only)

Note
Energy Rate calculations are only available for certain fluid types.

The Energy tab allows the user to configure the settings associated with the energy flow.

- Under the Energy Rate Setup heading, edit the Energy Rate Units and Damping values as needed. The energy rate calculation within the device uses undamped process variables. Energy rate damping is set independently of flow rate damping and measured process variables.
- Under the Custom Units Setup heading, the user may configure a custom unit for the energy rate measurement. Custom units allow the energy rate to be displayed in units of measure that are not standard in the Rosemount 3051SMV.

Note
If the energy rate is configured as the primary variable and is being output via the 4-20 mA signal, verify the 4–20 mA range (LRV and URV) after completing the custom unit configuration. For more information on verifying the 4–20 mA range, see Basic device configuration.

Follow these steps to configure a custom unit:

Procedure

1. Custom Unit: Enter the desired custom unit label to be displayed for the energy rate. Up to five characters including letters, numbers, and symbols can be entered in the custom unit field.

   Note
   It is recommended that the Custom Unit be entered in upper case letters If lower case letters are entered, the LCD display will show upper case letters. Additionally, the following special characters are recognized by the LCD display: hyphens (“-”), percent symbols (“%”), asterisks (“*”), forward slashes (“/”) and spaces. Any other character entered for the Custom Unit will be displayed as an asterisk (“*”) on the LCD display. The following warning will be returned indicating these changes: “Custom Unit contains characters that will display in upper case or asterisks on LCD display. The DCS will display as entered.”

2. Base Unit: From the drop-down menu, select a base unit to be used for the custom unit relationship.
3. Base per Custom: Enter a numeric value that represents the number of base units per one custom unit. The Rosemount 3051SMV uses the following convention: Base per Custom = $\frac{\text{Number of Base Units}}{\text{1 Custom Unit}}$

   Example

   Custom Unit: kg Base Unit: g

   Because:

   1 kg (Kilogram) = 1000 g (Grams)

   Base per Custom = $\frac{\text{Number of Base Units}}{\text{1 Custom Unit}} = \frac{1000 \cdot g}{1 \cdot kg}$ = 1000 The values of Base per Custom for common energy units are shown in Table 2-10.

4. Select **Apply**.
5. **Energy Rate Unit**: From the drop-down menu, select the custom unit that was created in Step 2.

Example

Note
The custom unit may not be available as a selection in the Energy Rate Unit drop-down menu until the drop-down menu is refreshed. To refresh the drop- down menu, navigate to the Basic Setup tab and then return to the Variables - Energy tab.

Table 2-10: Common Custom Units - Energy Flow

Custom unit	Base unit	Base per custom
BTU per Day (BTU/D)	Btu/h	0.041667
BTU per Minute (BTU/M)	Btu/h	60
Megajoules per Day (MJ/D)	MJ/h	0.041667

Table 2-10: Common Custom Units - Energy Flow *(continued)*

Custom unit	Base unit	Base per custom
Megajoules per Minute (MJ/M)	MJ/h	60
Thousands of BTU per Day (KBTUD)	Btu/h	41.6667
Thousands of BTU per Hour (KBTUH)	Btu/h	1000

If conversion factor tables or internet search engines are used to determine the Base per Custom value, it is important to enter the Custom Unit in the “From” field and the Base Unit in the “To” Field. An example of this is shown below:

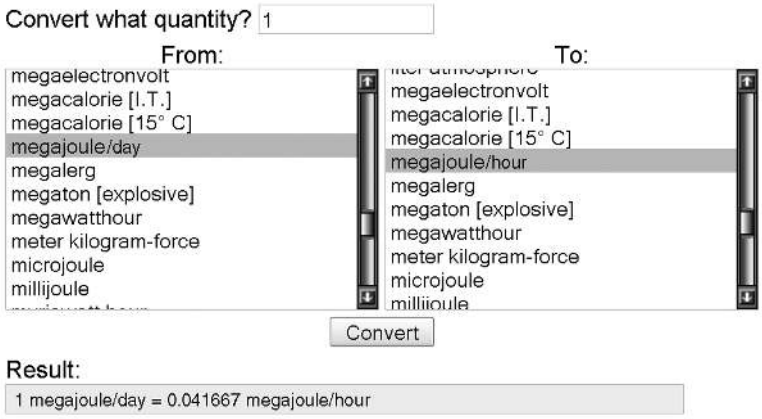

To calculate the Base per Custom value for a custom unit not shown in Table 2-10, see one of the following examples:

- Energy conversion example: Energy conversion example
- Time conversion example: Time conversion example
- Energy and time conversion example: Energy and time conversion example

Energy conversion example

To find the Base per Custom relationship for a custom unit of thousands of BTU per hour (kBtuh) and a base unit of BTU per hour (Btu/h), input the following:

Custom Unit = kBtuh

Base Unit = Btu/h

Because:

1 kBtu (Thousands of BTU) = 1000 Btu

Then: 1 kBtuh = $\frac{1 \cdot \mathrm{kBtu}}{1 \cdot \mathrm{h}} \times \frac{1000 \cdot \mathrm{Btu}}{1 \cdot \mathrm{h}}$ = 1000 Btu/h

1 kBtuh = 1000 Btu/h

Therefore:

$$\text{Base per Custom} = \frac{\text{Number of Base Units}}{1\ \text{Custom Unit}} = \frac{1000 \cdot \text{Btu/h}}{1 \cdot \text{kBtuh}} = 1000$$

Figure 2-31: Energy Rate Custom Units - Energy Conversion Example

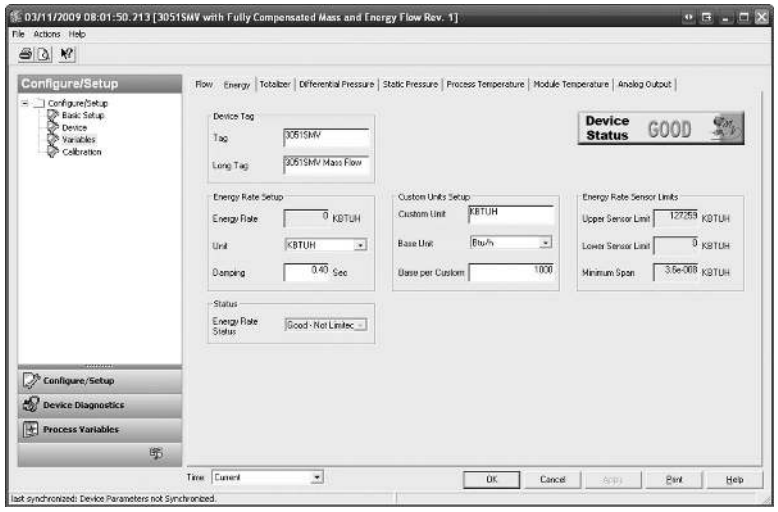

Time conversion example

To find the Base per Custom relationship for a custom unit of standard cubic feet per hour (scf/h) and a base unit of standard cubic feet per minute (StdCuft/min), input the following:

Custom Unit = scf/h Base Unit = StdCuft/min

Because:

1 h (Hour) = 60 min (Minutes)

$$\text{Then: 1 scf/h} = \frac{1 \cdot \text{scf}}{1 \cdot \text{h}} \times \frac{1 \cdot \text{h}}{60 \cdot \text{min}} = 0.016667\ \text{StdCuft/min}$$

1 scf/h = 0.016667 StdCuft/min

Therefore:

$$\text{Base per Custom} = \frac{\text{Number of Base Units}}{1\ \text{Custom Unit}} = \frac{0.016667 \cdot \text{StdCuft/min}}{1 \cdot \text{scf/h}} = 0.016667$$

Figure 2-32: Flow Rate Custom Units - Time Conversion Example

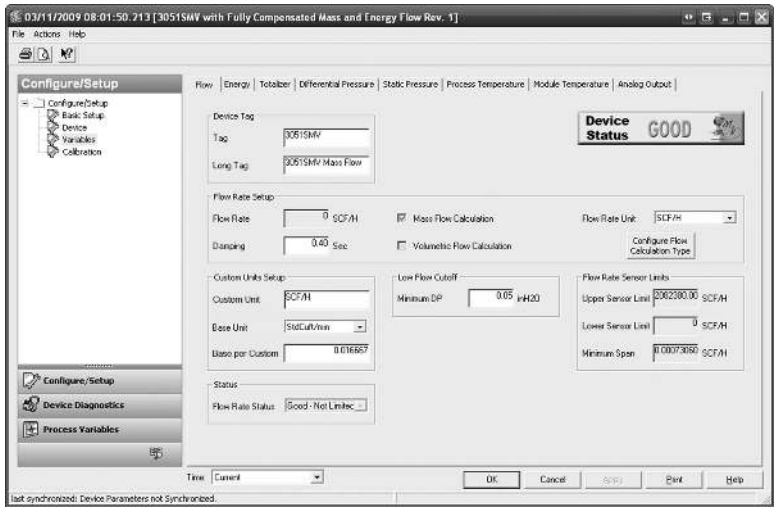

Energy and time conversion example

To find the Base per Custom relationship for a custom unit of thousands of BTU per day (kBtud) and a base unit of BTU per hour (Btu/h), input the following:

Custom Unit = kBtud Base Unit = Btu/h

Because:

1 kBtu (Thousands of BTU)= 1000 Btu and

1 d (Day) = 24 h (Hours)

Then:

$$1\ \text{kBtud} = \frac{1 \cdot \text{kBtu}}{1 \cdot \text{d}} \times \frac{1000 \cdot \text{Btu}}{1 \cdot \text{kBtu}} \times \frac{1 \cdot \text{d}}{24 \cdot \text{h}} = 41.6667\ \text{Btu/h}$$

1 kBtud = 41.6667 Btu/h

Therefore:

$$\text{Base per Custom} = \frac{\text{Number of Base Units}}{1\ \text{Custom Unit}} = \frac{41.6667 \cdot \text{Btu/h}}{1 \cdot \text{kBtud}} =$$

41.6667

Figure 2-33: Energy Rate Custom Units - Energy and Time Conversion Example

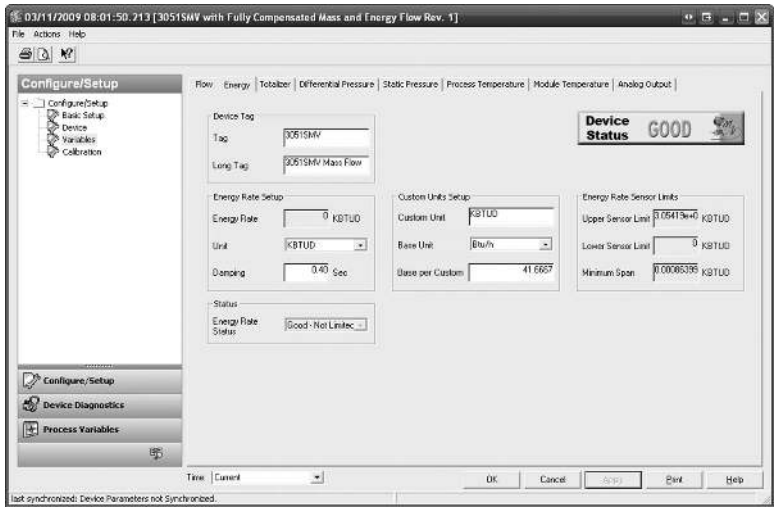

- Under the Low Flow Cutoff heading, edit the current Minimum DP Value as needed. The unit for this value is the user-selected DP unit. If the measured DP value is less than the minimum DP value, the transmitter will calculate the energy value to be zero.
- The Sensor Limits and Minimum Span can be viewed under the Energy Rate Sensor Limits heading.

2.7.3 Totalizer

About this task

Mass and energy flow Fast Keys	1, 4, 1, 3

(Fully compensated mass and energy flow feature board only)

The Totalizer tab is used to configure the settings associated with the totalizer functionality within the transmitter.

Figure 2-34: Variables - Totalizer Tab

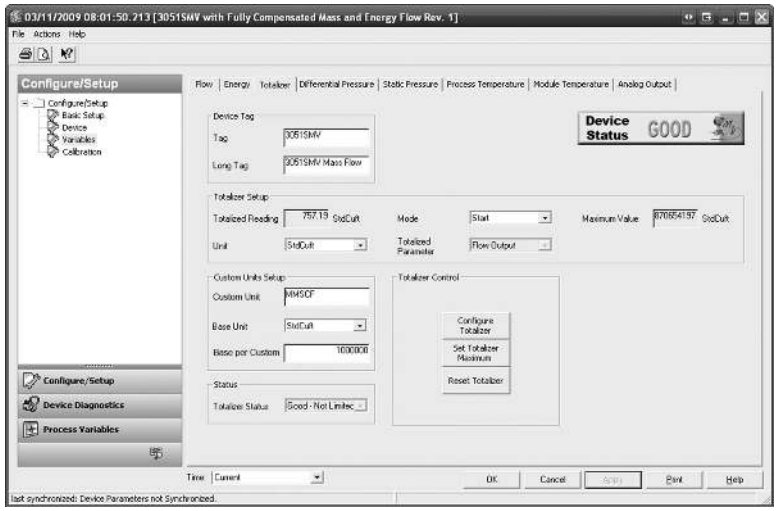

Procedure

1. To turn the totalizer functionality on or off, select **Start** or **Stop** from the Mode drop down menu under the Totalizer Setup heading. The totalizer Units may also be edited under this heading.
2. Verify the Totalized Parameter and the Totalizer Maximum value. To edit the Totalized Parameter, select the Configure Totalizer button under the Totalizer Control heading.

   Note
   When the totalizer reaches its maximum value, it automatically resets to zero and continues totalizing. The default maximum is a value equivalent to 4.29 billion pounds, actual cubic feet, or BTU. To edit the Totalizer Maximum value, select the Set Totalizer Maximum button under the Totalizer Control heading.

3. To reset the Totalized Reading to zero, select the Reset Totalizer button under the Totalizer Control heading.
4. Under the Custom Units Setup heading, the user may configure a custom unit for the Totalized Reading. Custom units allow the totalizer rate to be displayed in units of measure that are not standard in the Rosemount 3051SMV.

   Note
   If the totalizer rate is configured as the primary variable and is being output via the 4–20 mA signal, verify the 4–20 mA range (LRV and URV) after completing the custom unit configuration. For more information on verifying the 4–20 mA range, see Basic device configuration.

   Follow these steps to configure a custom unit:

   a) Custom Unit: Enter the desired custom unit label to be displayed for the Totalized Reading. Up to five characters including letters, numbers, and symbols can be entered in the custom unit field.

Note
It is recommended that the Custom Unit be entered in upper case letters. If lower case letters are entered, the LCD display will show upper case letters. Additionally, the following special characters are recognized by the LCD display: hyphens (“-”), percent symbols (“%”), asterisks (“*”), forward slashes (“/”) and spaces. Any other character entered for the Custom Unit will be displayed as an asterisk (“*”) on the LCD display. The following warning will be returned indicating these changes: “Custom Unit contains characters that will display in upper case or asterisks on LCD display. The DCS will display as entered.”

b) Base Unit: From the drop-down menu, select a base unit to be used for the custom unit relationship.

c) Base per Custom: Enter a numeric value that represents the number of base units per one custom unit. The Rosemount 3051SMV uses the following convention: Base per Custom = $\frac{\text{Number of Base Units}}{\text{1 Custom Unit}}$

Example

Custom Unit: kg Base Unit: g

Because:

1 kg (Kilogram) = 1000 g (Grams)

Base per Custom = $\frac{\text{Number of Base Units}}{\text{1 Custom Unit}} = \frac{1000 \cdot g}{1 \cdot kg}$ = 1000 The values of Base per Custom for common totalizer units are shown in Table 2-11.

d) Select Apply.

e) Totalizer Unit: From the drop-down menu, select the custom unit that was created in 4.b.

Example

Note
The custom unit may not be available as a selection in the Totalizer Unit drop-down menu until the drop-down menu is refreshed. To refresh the drop- down menu, navigate to the Basic Setup tab and then return to the Variables - Totalizer tab.

Table 2-11: Common Custom Units - Totalizer

Custom unit	Base unit	Base per custom
Millions of Normal Cubic Meters (MMNCM)	NmlCum	1000000
Millions of Standard Cubic Feet (MMSCF)	StdCuft	1000000
Millions of Standard Cubic Meters (MMSCM)	StdCum	1000000
Thousands of Metric Tons (KMTON)	MetTon	1000
Thousands of Normal Cubic Meters (KNCM)	NmlCum	1000
Thousands of Short Tons (KSTON)	STon	1000
Thousands of Standard Cubic Feet (KSCF)	StdCuft	1000

Table 2-11: Common Custom Units - Totalizer *(continued)*

Custom unit	Base unit	Base per custom
Thousands of Standard Cubic Meters (KSCM)	StdCum	1000

If conversion factor tables or internet search engines are used to determine the Base per Custom value, it is important to enter the Custom Unit in the “From” field and the Base Unit in the “To” Field.

To calculate the Base per Custom value for a custom unit not shown in Table 2-9, see the example:

Totalizer conversion example

To find the Base per Custom relationship for a custom unit of millions of standard cubic feet (mmscf) and a base unit of standard cubic feet (StdCuft), input the following:

Custom Unit = mmscf

Base Unit = StdCuft

Because:

1 mmscf (Millions of Standard Cubic Feet) = 1000000 StdCuft (Standard Cubic Feet)

Therefore:

$$\text{Base per Custom} = \frac{\text{Number of Base Units}}{1\ \text{Custom Unit}} = \frac{1000000 \cdot \text{StdCuft}}{1 \cdot \text{mmscf}} = 1000000$$

Figure 2-35: Totalizer Custom Units - Totalizer Example

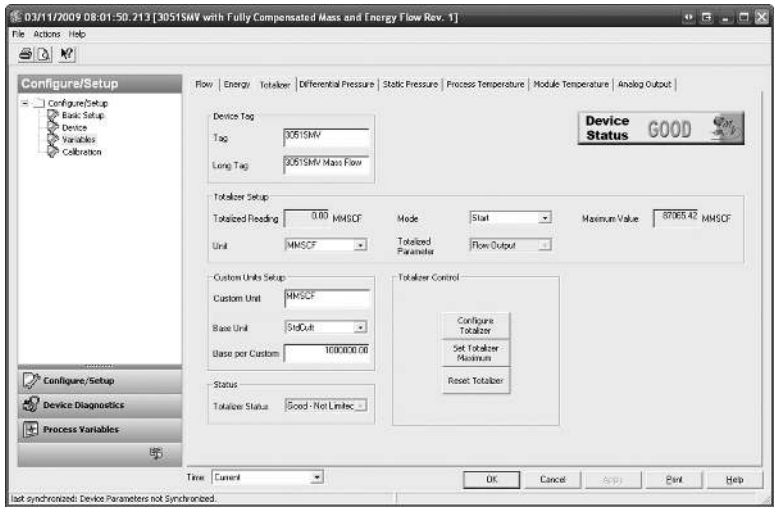

2.7.4 Differential pressure

Mass and energy flow Fast Keys	1, 4, 1, 4
Direct process variable output Fast Keys	1, 4, 1, 1

Note
For differential pressure sensor calibration, see Differential pressure sensor calibration.

Figure 2-36: Variables - Differential Pressure Tab

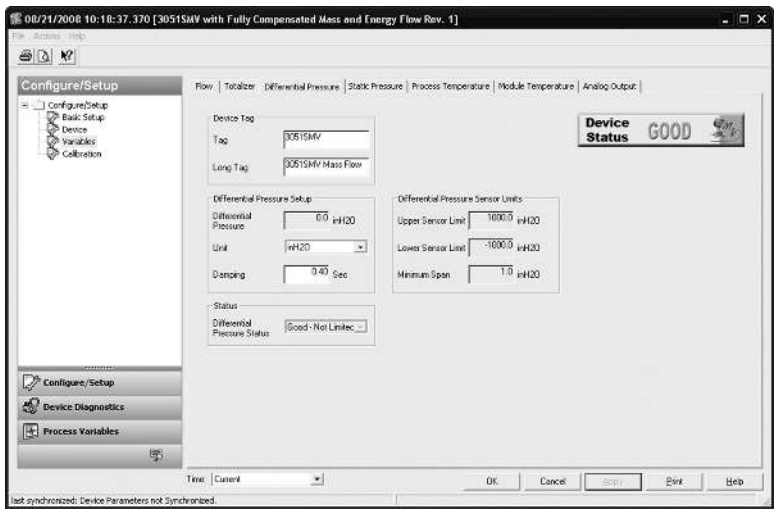

- Under the Differential Pressure Setup heading, edit the DP Units and Damping value as needed.
- The Sensor Limits and Minimum Span can be viewed under the Differential Pressure Sensor Limits heading.

2.7.5 Static pressure

Mass and energy flow Fast Keys	1, 4, 1, 5
Direct process variable output Fast Keys	1, 4, 1, 2

Note
For static pressure sensor calibration, see Static pressure sensor calibration.

Figure 2-37: Variables - Static Pressure Tab

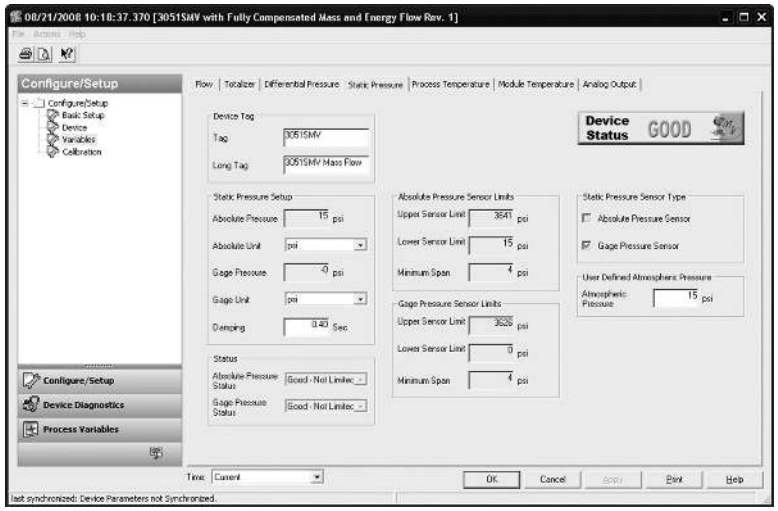

- Under the Static Pressure Setup heading, edit the Absolute Pressure Units and Gage Pressure Units as needed. The static pressure Damping may also be edited.

Note
The transmitter may be equipped with either an absolute or gage static pressure sensor type depending on specified model code. The type of static pressure sensor equipped in the transmitter can be determined by referring to the Static Pressure Sensor Type heading. The static pressure type not being measured is a calculated value using the atmospheric pressure value as specified under the User-Defined Atmospheric Pressure heading.

- The Sensor Limits and Minimum Span for the absolute and gage static pressure can be viewed under the Sensor Limit headings.

2.7.6 Process temperature

Mass and energy flow Fast Keys	1, 4, 1, 6
Direct process variable output Fast Keys	1, 4, 1, 3

Note
For process teperature sensor calibration, see Process temperature sensor calibration . If a transmitter was ordered with Fixed Process Temperature Only, the Fixed Temperature Value and Units can be edited on the Fixed Temperature tab.

Figure 2-38: Variables - Process Temperature Tab

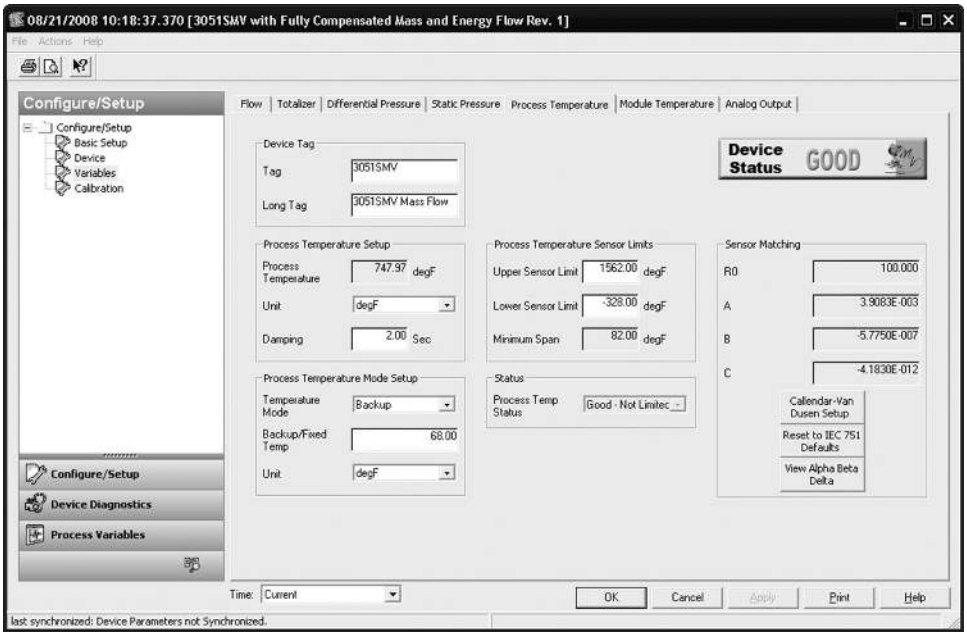

- Under the Process Temperature Setup heading, edit the Units and Damping value as needed.
- Select the Temperature Mode under the Process Temperature Setup heading. See Table 2-12.

Table 2-12: Temperature Modes

Temperature mode	Description
Normal	The transmitter will only use the actual measured Process Temperature value. If the temperature sensor fails, the transmitter will put the analog signal into Alarm.
Backup	The transmitter will use the actual measured Process Temperature value. If the temperature sensor fails, the transmitter will use the value shown in the Fixed/ Backup Temperature field.
Fixed	The transmitter will always use the temperature value shown in the Fixed/Backup Temperature field.

Note
Process Temperature Mode Setup only applies to transmitters with fully compensated mass and energy flow feature board.

- The Sensor Limits and Minimum Span can be viewed under the Process Temperature Sensor Limits heading. The upper and lower sensor limits may be edited as needed.

The Rosemount 3051SMV accepts Callendar-Van Dusen constants from a calibrated RTD schedule and generates a special custom curve to match that specific sensor Resistance vs. Temperature performance. Matching the specific sensor curve with the transmitter configuration enhances the temperature measurement accuracy.

- Under the Sensor Matching heading, the Callendar-Van Dusen constants R_0, A, B, and C can be viewed. If the Callendar-Van Dusen constants are known for the user's specific Pt 100 RTD sensor, the constants R_0, A, B, and C may be edited by selecting the Callendar-Van Dusen Setup button and following the on-screen prompts. The user may also view the α, β, and δ coefficients by selecting the View Alpha, Beta, Delta button. The constants R_0, α, β, and δ may be edited by selecting the Callendar-Van Dusen Setup button and following the on-screen prompts. To reset the transmitter to the IEC 751 Defaults, select the Reset to IEC 751 Defaults button.

2.7.7 Module temperature

Mass and energy flow Fast Keys	1, 4, 1, 7
Direct process variable output Fast Keys	1, 4, 1, 4

The sensor module temperature variable is the measured temperature of the sensors and electronics within the SuperModule assembly. The module temperature can be used to control heat tracing or diagnose device overheating.

Figure 2-39: Variables - Module Temperature Tab

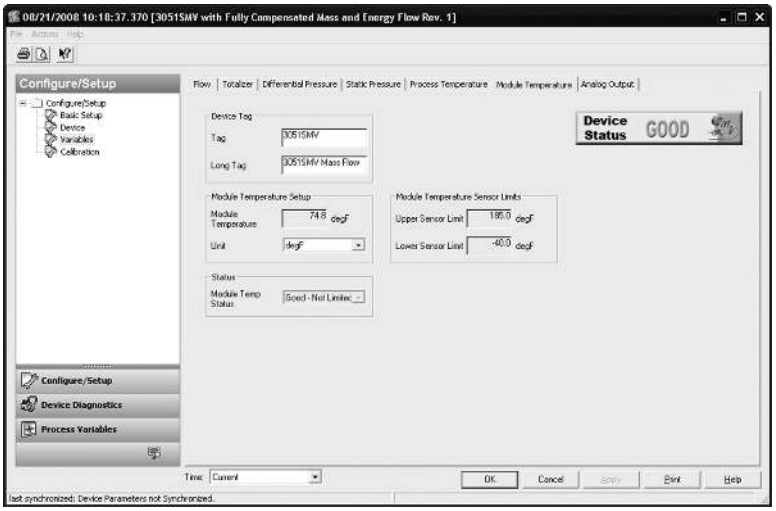

- Under the Module Temperature Setup heading, edit the Units as needed.
- The Sensor Limits can be viewed under the Module Temperature Sensor Limits heading.

2.7.8 Analog output

About this task

Mass and energy flow Fast Keys	1, 4, 3, 2
Direct process variable output Fast Keys	1, 4, 3, 2

Note
For Analog calibration, see Analog calibration.

Figure 2-40: Variables - Analog Output Tab

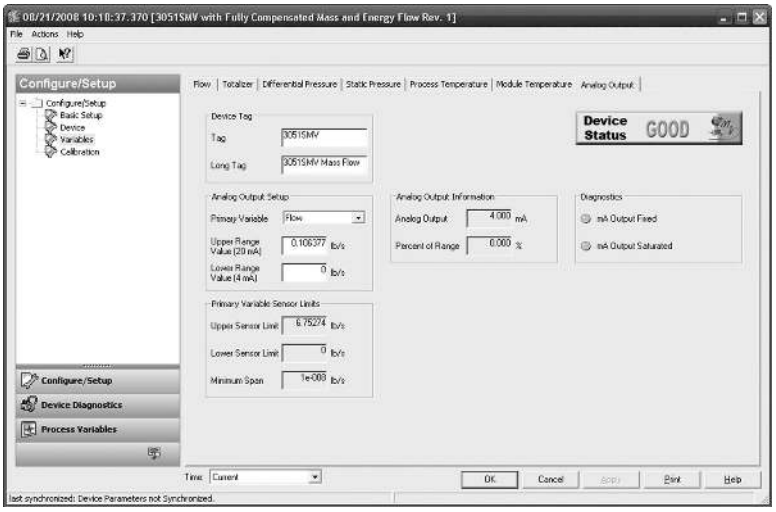

Procedure

1. Select the Primary Variable under the Analog Output Setup heading. The Upper Range Value and Lower Range Value may also be edited under this heading.
2. Verify the Upper Sensor Limit and Lower Sensor Limit and minimum span under the Primary Variable Sensor Limits heading.

Transfer function (direct process variable output feature board only)

The Rosemount 3051SMV with direct process variable output feature board has two analog output settings: Linear and Square Root. Activate the square root output option to make analog output proportional to flow. As input approaches zero, the Rosemount 3051SMV automatically switches to linear output in order to ensure a smooth, stable output near zero (see Figure 2-41).

From 0 to 0.6 percent of the ranged pressure input, the slope of the curve is unity (y = x). This allows accurate calibration near zero. Greater slopes would cause large changes in output (for small changes at input). From 0.6 to 0.8 percent, curve slope equals 41.72 (y = 41.72x) to achieve continuous transition from linear to square root at the transition point.

Note
Do not set both the analog output of the device and the control system to square root.

Figure 2-41: Square Root Output Transition Point

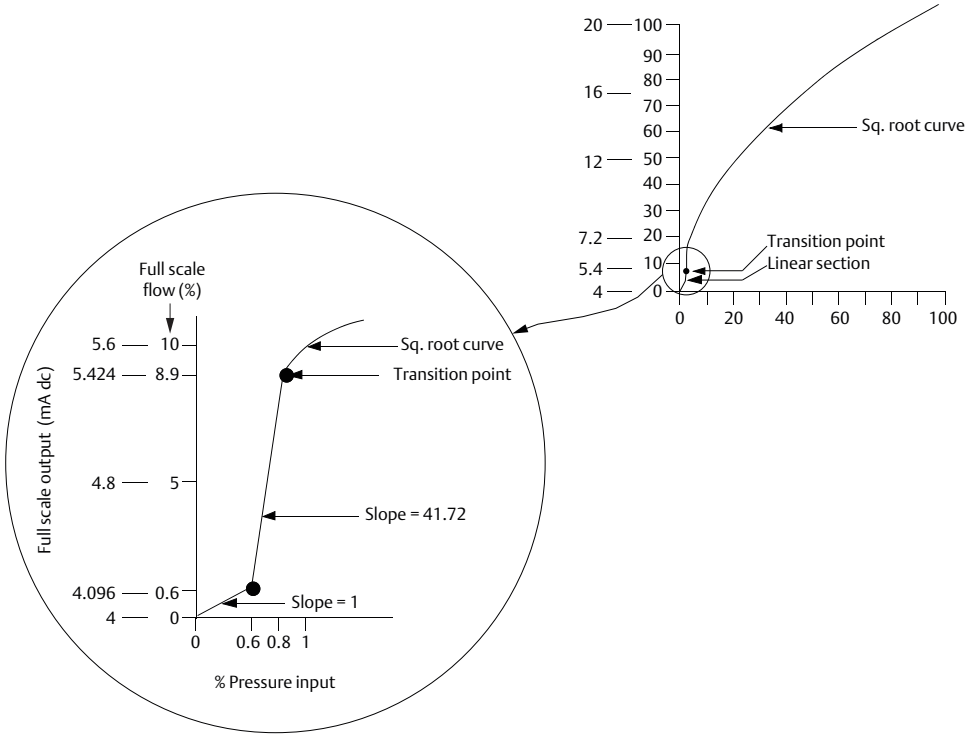

Figure 2-41 only applies to the square root output for the Rosemount 3051SMV with the direct process variable output feature board.

Note
For a flow turndown of greater than 10:1, it is not recommended to perform a square root transfer function in the transmitter. Instead, perform the square root transfer function in the control system.

2.8 Menu trees and Field Communicator Fast Keys

Based on the configuration ordered, some measurements (i.e. static pressure, process temperature) and/or calculation types (i.e. mass, volumetric, and energy flow) may not be available for all fluid types. Available measurements and/or calculation types are determined by the multivariable type and measurement type codes ordered. See Ordering information for more information.

The menu trees and Field Communicator Fast Keys in this section are shown for the following model codes:

- Multivariable type M (fully compensated mass and energy flow) with measurement type 1 (differential pressure, static pressure, and process temperature)
- Multivariable type P (direct process variable output) with measurement type 1 (differential pressure, static pressure, and process temperature)

The menu trees and 475 Field Communicator Fast Keys for other model codes will vary.

Figure 2-42: Menu Tree for Fully Compensated Mass and Energy Flow

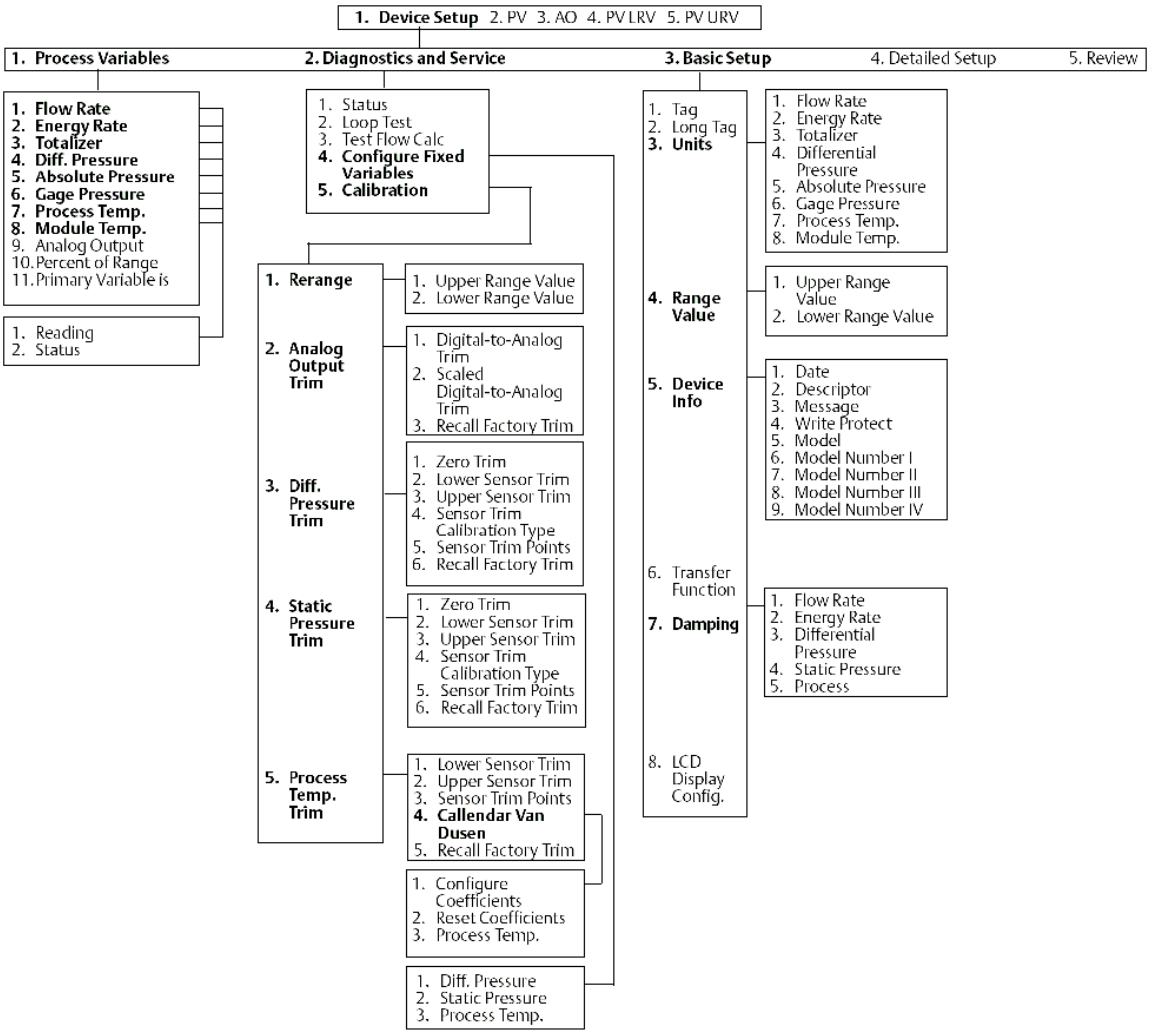

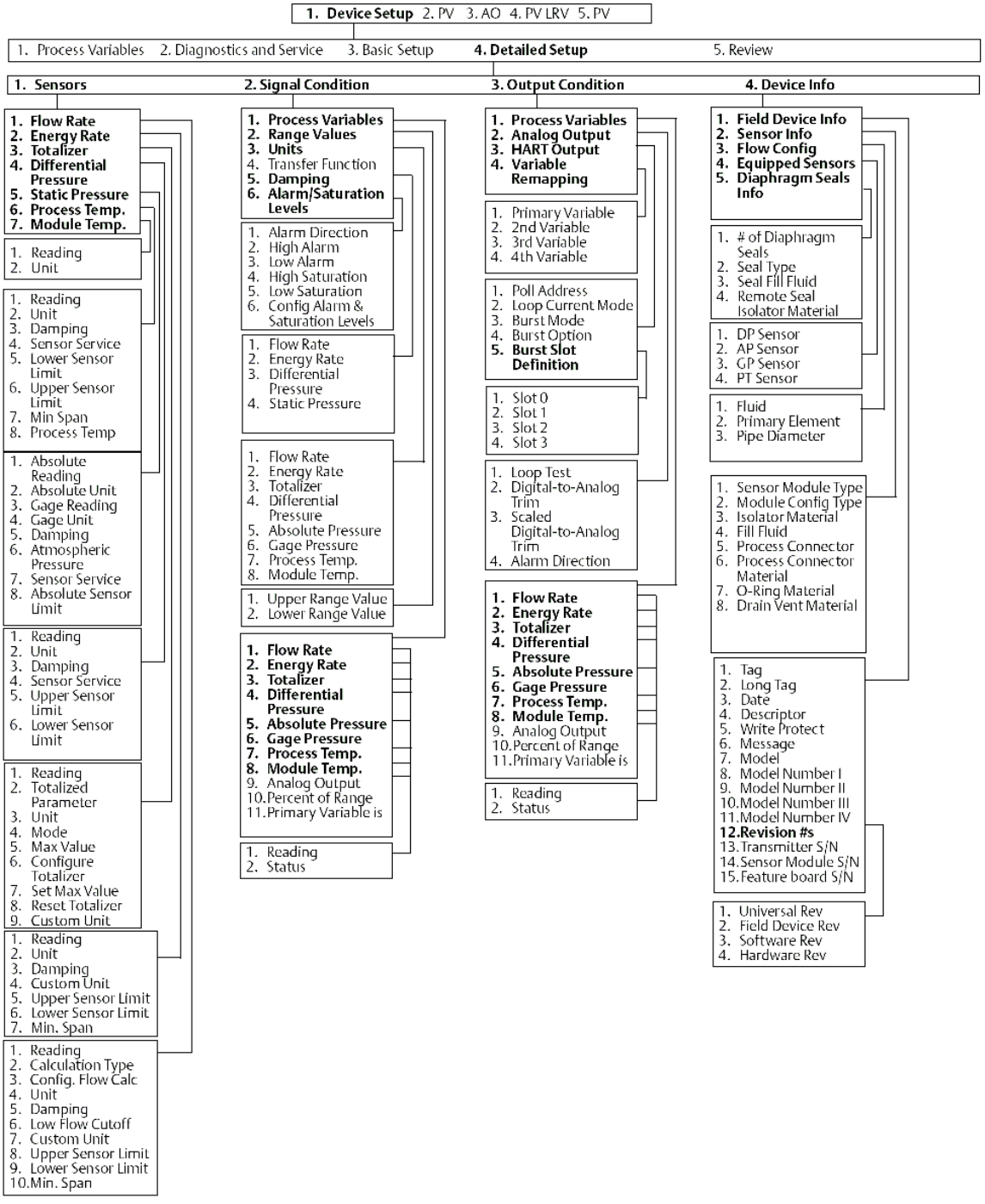
1. Device Setup 2. PV 3. AO 4. PV LRV 5. PV
1. Process Variables
2. Diagnostics and Service
3. Basic Setup
4. Detailed Setup
5. Review
1. Sensors
2. Signal Condition
3. Output Condition
4. Device Info
1. Flow Rate
2. Energy Rate
3. Totalizer
4. Differential Pressure
5. Static Pressure
6. Process Temp.
7. Module Temp.
1. Reading
2. Unit
1. Reading
2. Unit
3. Damping
4. Sensor Service
5. Lower Sensor Limit
6. Upper Sensor Limit
7. Min Span
8. Process Temp
1. Absolute Reading
2. Absolute Unit
3. Gage Reading
4. Gage Unit
5. Damping
6. Atmospheric Pressure
7. Sensor Service
8. Absolute Sensor Limit
1. Reading
2. Unit
3. Damping
4. Sensor Service
5. Upper Sensor Limit
6. Lower Sensor Limit
1. Reading
2. Totalized Parameter
3. Unit
4. Mode
5. Max Value
6. Configure Totalizer
7. Set Max Value
8. Reset Totalizer
9. Custom Unit
1. Reading
2. Unit
3. Damping
4. Custom Unit
5. Upper Sensor Limit
6. Lower Sensor Limit
7. Min. Span
1. Reading
2. Calculation Type
3. Config. Flow Calc
4. Unit
5. Damping
6. Low Flow Cutoff
7. Custom Unit
8. Upper Sensor Limit
9. Lower Sensor Limit
10. Min. Span
1. Process Variables
2. Range Values
3. Units
4. Transfer Function
5. Damping
6. Alarm/Saturation Levels
1. Alarm Direction
2. High Alarm
3. Low Alarm
4. High Saturation
5. Low Saturation
6. Config Alarm & Saturation Levels
1. Flow Rate
2. Energy Rate
3. Differential Pressure
4. Static Pressure
1. Flow Rate
2. Energy Rate
3. Totalizer
4. Differential Pressure
5. Absolute Pressure
6. Gage Pressure
7. Process Temp.
8. Module Temp.
1. Upper Range Value
2. Lower Range Value
1. Flow Rate
2. Energy Rate
3. Totalizer
4. Differential Pressure
5. Absolute Pressure
6. Gage Pressure
7. Process Temp.
8. Module Temp.
9. Analog Output
10. Percent of Range
11. Primary Variable is
1. Reading
2. Status
1. Process Variables
2. Analog Output
3. HART Output
4. Variable Remapping
1. Primary Variable
2. 2nd Variable
3. 3rd Variable
4. 4th Variable
1. Poll Address
2. Loop Current Mode
3. Burst Mode
4. Burst Option
5. Burst Slot Definition
1. Slot 0
2. Slot 1
3. Slot 2
4. Slot 3
1. Loop Test
2. Digital-to-Analog Trim
3. Scaled Digital-to-Analog Trim
4. Alarm Direction
1. Flow Rate
2. Energy Rate
3. Totalizer
4. Differential Pressure
5. Absolute Pressure
6. Gage Pressure
7. Process Temp.
8. Module Temp.
9. Analog Output
10. Percent of Range
11. Primary Variable is
1. Reading
2. Status
1. Field Device Info
2. Sensor Info
3. Flow Config
4. Equipped Sensors
5. Diaphragm Seals Info
1. # of Diaphragm Seals
2. Seal Type
3. Seal Fill Fluid
4. Remote Seal Isolator Material
1. DP Sensor
2. AP Sensor
3. GP Sensor
4. PT Sensor
1. Fluid
2. Primary Element
3. Pipe Diameter
1. Sensor Module Type
2. Module Config Type
3. Isolator Material
4. Fill Fluid
5. Process Connector
6. Process Connector Material
7. O-Ring Material
8. Drain Vent Material
1. Tag
2. Long Tag
3. Date
4. Descriptor
5. Write Protect
6. Message
7. Model
8. Model Number I
9. Model Number II
10. Model Number III
11. Model Number IV
12. Revision #s
13. Transmitter S/N
14. Sensor Module S/N
15. Feature board S/N
1. Universal Rev
2. Field Device Rev
3. Software Rev
4. Hardware Rev

Figure 2-43: Menu Tree for Direct Process Variable Output

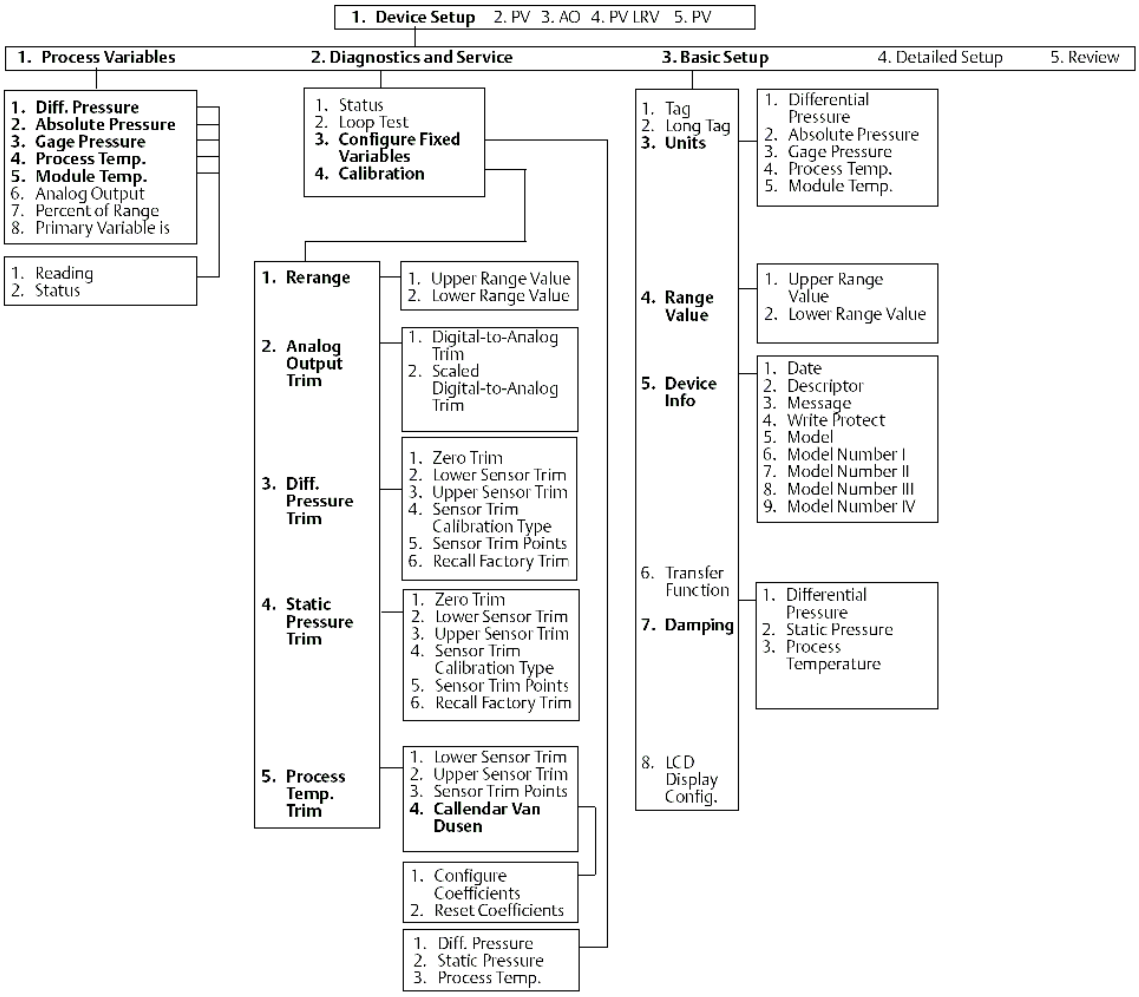

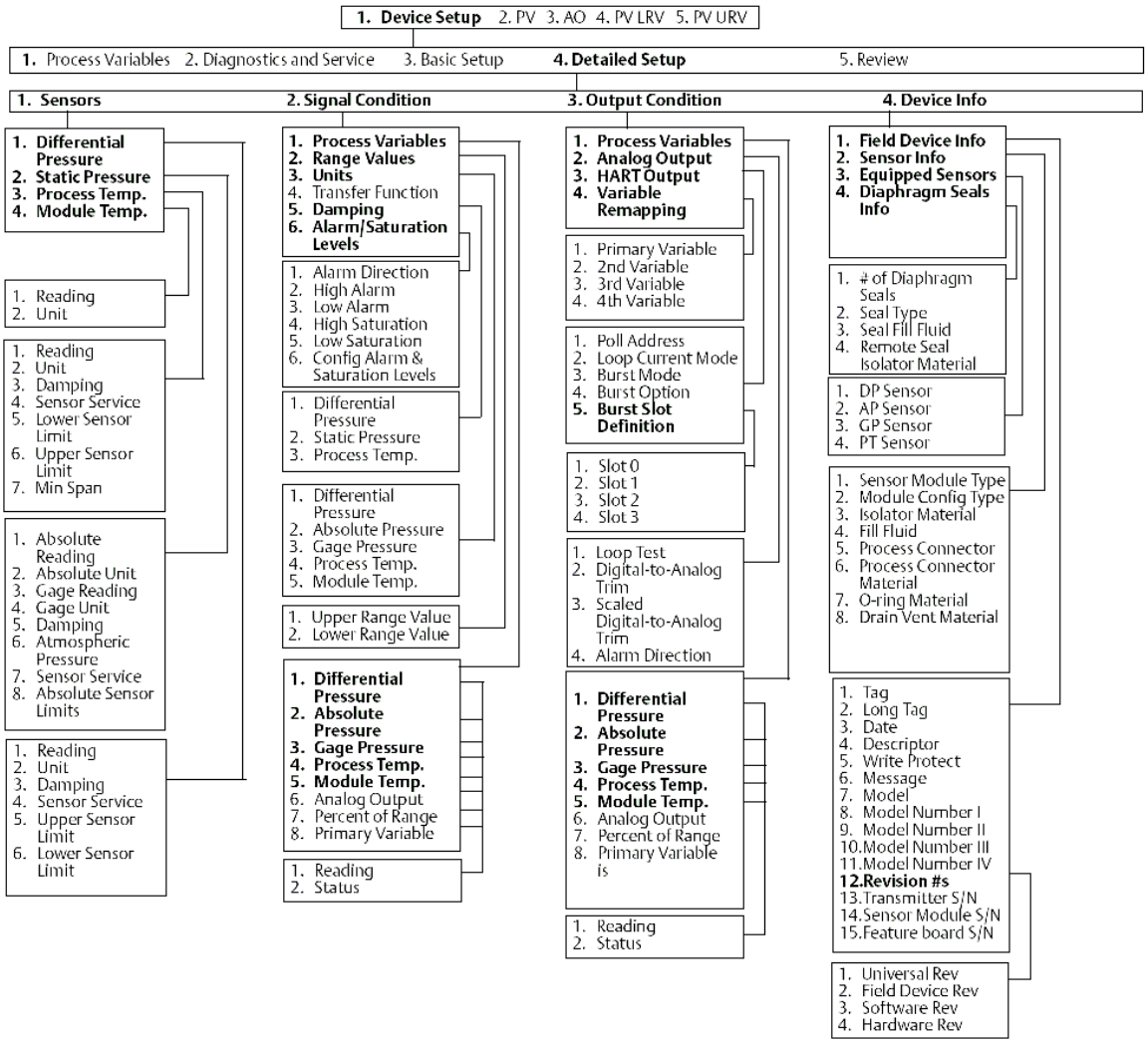

2.8.1 Field Communicator Fast Keys

Use Rosemount 3051SMV Engineering Assistant or any HART-compliant master to communicate with and verify configuration of the Rosemount 3051SMV.

Table 2-13 shows the Field Communicator Fast Keys for the fully compensated mass and energy flow. Table 2-14 shows the Fast Keys for the direct process variable output.

A check (✓) indicates the basic configuration parameters. At a minimum, these parameters should be verified as part of the configuration and startup procedure.

Table 2-13: Fast Keys for Fully Compensated Mass and Energy Flow Output

	Function	Fast Key sequence
	Absolute Pressure Reading and Status	1, 4, 2, 1, 5

Table 2-13: Fast Keys for Fully Compensated Mass and Energy Flow Output *(continued)*

	Function	Fast Key sequence
	Absolute Pressure Sensor Limits	1, 4, 1, 5, 8
	Absolute Pressure Units	1, 3, 3, 5
	Alarm and Saturation Level Configuration	1, 4, 2, 6, 6
	Alarm and Saturation Levels	1, 4, 2, 6
	Analog Output Trim Options	1, 2, 5, 2
	Burst Mode Setup	1, 4, 3, 3, 3
	Burst Mode Options	1, 4, 3, 3, 4
	Callendar-van Dusen Sensor Matching	1, 2, 5, 5, 4
	Configure Fixed Variables	1, 2, 4
	Damping	1, 3, 7
	Diaphragm Seals Information	1, 4, 4, 5
✓	Differential Pressure Low Flow Cutoff	1, 4, 1, 1, 6
	Differential Pressure Reading and Status	1, 4, 2, 1, 4
	Differential Pressure Sensor Trim Options	1, 2, 5, 3
✓	Differential Pressure Zero Trim	1, 2, 5, 3, 1
	Differential Pressure Units	1, 3, 3, 4
	Energy Rate Units	1, 3, 3, 2
	Energy Reading and Status	1, 4, 2, 1, 2
	Equipped Sensors	1, 4, 4, 4
	Field Device Information	1, 4, 4, 1
	Flow Calculation Type	1, 4, 1, 1, 2
✓	Flow Rate Units	1, 3, 3, 1
	Flow Reading and Status	1, 4, 2, 1, 1
	Gage Pressure Reading and Status	1, 4, 2, 1, 6
	Gage Pressure Sensor Limits	1, 4, 1, 5, 9
	Gage Pressure Units	1, 3, 3, 6
	LCD Display Configuration	1, 3, 8
	Loop Test	1, 2, 2
	Module Temperature Reading and Status	1, 4, 2, 1, 8
	Module Temperature Units	1, 3, 3, 8
	Poll Address	1, 4, 3, 3, 1
	Process Temperature Reading and Status	1, 4, 2, 1, 7
✓	Process Temperature Sensor Mode	1, 4, 1, 6, 8

Table 2-13: Fast Keys for Fully Compensated Mass and Energy Flow Output *(continued)*

	Function	Fast Key sequence
	Process Temperature Sensor Trim Options	1, 2, 5, 5
	Process Temperature Unit	1, 3, 3, 7
✓	Ranging the Analog Output	1, 2, 5, 1
	Recall Factory Trim Settings	1, 2, 5, 2, 3
	Sensor Information	1, 4, 4, 2
✓	Static Pressure Sensor Lower Trim (AP Sensor)	1, 2, 5, 4, 2
	Static Pressure Sensor Trim Options	1, 2, 5, 4
✓	Static Pressure Sensor Zero Trim (GP Sensor)	1, 2, 5, 4, 1
✓	Status	1, 2, 1
✓	Tag	1, 3, 1
	Test Flow Calculation	1, 2, 3
	Totalizer Configuration	1, 4, 1, 3
	Totalizer Reading and Status	1, 4, 2, 1, 3
	Totalizer Units	1, 3, 3, 3
	Variable Mapping	1, 4, 3, 4
	Write Protect	1, 3, 5, 4

Table 2-14: Fast Keys for Direct Process Variable Measurement

	Function	Fast Key sequence
	Absolute Pressure Reading and Status	1, 4, 2, 1, 2
	Absolute Pressure Sensor Limits	1, 4, 1, 2, 8
✓	Absolute Pressure Units	1, 3, 3, 2
	Alarm and Saturation Level Configuration	1, 4, 2, 6, 6
	Alarm and Saturation Levels	1, 4, 2, 6
	Analog Output Trim Options	1, 2, 4, 2
	Burst Mode Setup	1, 4, 3, 3, 3
	Burst Mode Options	1, 4, 3, 3, 4
	Callendar-van Dusen Sensor Matching	1, 2, 4, 5, 4
	Damping	1, 3, 7
	Diaphragm Seals Information	1, 4, 4, 4
	Differential Pressure Reading and Status	1, 4, 2, 1, 1
	Differential Pressure Sensor Trim Options	1, 2, 4, 3
✓	Differential Pressure Zero Trim	1, 2, 4, 3, 1

Table 2-14: Fast Keys for Direct Process Variable Measurement *(continued)*

	Function	Fast Key sequence
✓	Differential Pressure Units	1, 3, 3, 1
	Equipped Sensors	1, 4, 4, 3
	Field Device Information	1, 4, 4, 1
	Gage Pressure Reading and Status	1, 4, 2, 1, 3
	Gage Pressure Sensor Limits	1, 4, 1, 2, 9
✓	Gage Pressure Units	1, 3, 3, 3
	LCD Display Configuration	1, 3, 8
	Loop Test	1, 2, 2
	Module Temperature Reading and Status	1, 4, 2, 1, 5
	Module Temperature Units	1, 3, 3, 5
	Poll Address	1, 4, 3, 3, 1
	Process Temperature Reading and Status	1, 4, 2, 1, 4
	Process Temperature Sensor Trim Options	1, 2, 4, 5
✓	Process Temperature Unit	1, 3, 3, 4
✓	Ranging the Analog Output	1, 2, 4, 1
	Recall Factory Trim Settings	1, 2, 4, 2, 3
	Sensor Information	1, 4, 4, 2
✓	Static Pressure Sensor Lower Trim (AP Sensor)	1, 2, 4, 4, 2
	Static Pressure Sensor Trim Options	1, 2, 4, 4
✓	Static Pressure Sensor Zero Trim (GP Sensor)	1, 2, 4, 4, 1
✓	Status	1, 2, 1
✓	Tag	1, 3, 1
✓	Transfer Function	1, 3, 6
	Variable Mapping	1, 4, 3, 4
	Write Protect	1, 3, 5, 4

3 Installation

3.1 Overview

This section contains information that covers installation considerations for Rosemount™ 3051S MultiVariable™ Transmitter (Rosemount 3051SMV). The Rosemount 3051SMV Quick Start Guide is shipped with every transmitter to describe basic installation, wiring, configuration, and startup procedures. Dimensional drawings for each Rosemount 3051SMV type and mounting configuration are included in .

3.2 Safety messages

Procedures and instructions in this section may require special precautions to ensure the safety of personnel performing the operation.

⚠ WARNING

Explosions

Explosions could result in death or serious injury.

- Installation of device in an explosive environment must be in accordance with appropriate local, national, and international standards, codes, and practices.
- Please review the *Product certifications* section in the Rosemount™ 3051 Product Data Sheet for any restrictions associated with a safe installation.
- Before connecting a handheld communicator in an explosive atmosphere, make sure the instruments in the loop are installed in accordance with intrinsically safe or non-incendive field wiring practices.
- In an explosion-proof/flameproof installation, do not remove the transmitter covers when power is applied to the unit.

⚠ WARNING

Process leaks

Process leaks may cause harm or result in death.

- Install and tighten process connectors before applying pressure.
- Install and tighten all four flange bolts before applying pressure.

⚠ WARNING

Electrical shock

Electrical shock can result in death or serious injury.

Avoid contact with the leads and terminals. High voltage that may be present on leads can cause electrical shock.

⚠ WARNING

Spare parts

Replacement equipment or spare parts not approved by Emerson™ for use as spare parts could reduce the pressure retaining capabilities of the transmitter and may render the instrument dangerous.

Use only bolts supplied or sold by Emerson as spare parts.

⚠ CAUTION

Improper assembly

Improper assembly of manifolds to traditional flange can damage sensor module.

For safe assembly of manifold to traditional flange, bolts must break back plane of flange web (i.e., bolt hole) but must not contact sensor module housing.

3.3 Installation considerations

3.3.1 General

Measurement performance depends upon proper installation of the transmitter, impulse piping, and process temperature sensor. Mount the transmitter close to the process and use minimum piping to achieve best performance. Also, consider the need for easy access, personnel safety, practical field calibration, and a suitable transmitter environment. Install the transmitter to minimize vibration, shock, and temperature fluctuation.

Note
Install the enclosed pipe plug (found in the box) in the unused conduit opening if optional process temperature input is not used. For proper straight and tapered thread engagement requirements, see the appropriate approvals drawings in Product Certifications.

For material compatibility considerations, see the Material Selection Technical Note.

3.3.2 Mechanical

For steam service or for applications with process temperatures greater than the limits of the transmitter, do not blow down impulse piping through the transmitter. Flush lines with the blocking valves closed and refill lines with water before resuming measurement.

When the transmitter is mounted on its side, position the coplanar flange to ensure proper venting or draining. Mount the flange as shown in Bolt installation, keeping drain/vent connections on the bottom for gas service and on the top for liquid service.

3.3.3 Environmental

Access requirements and Cover installation can help optimize transmitter performance. Mount the transmitter to minimize ambient temperature changes, vibration, mechanical

shock, and to avoid external contact with corrosive materials. lists temperature operating limits.

3.4 Installation procedures

3.4.1 Configure security (write protect)

About this task

Changes to the transmitter configuration data can be prevented with the security (write protect) switch located on the feature board. See Figure 3-1 for the location of the switch. Position the switch in the ON position to prevent accidental or deliberate change of configuration data.

If the transmitter write protection switch is in the ON position, the transmitter will not accept any “writes” to its memory. Configuration changes, such as digital trim and reranging, cannot take place when the transmitter security is on.

To reposition the switches, follow the procedure described below:

Procedure

1. Do not remove the transmitter covers in explosive atmospheres when the circuit is live. If the transmitter is live, set the loop to manual and remove power.
2. Remove the housing cover opposite the field terminal side of the housing.
3. To reposition the switches as desired, slide the security and alarm switches into the preferred position using a small screwdriver. See Figure 3-1.

Figure 3-1: Switch Configuration

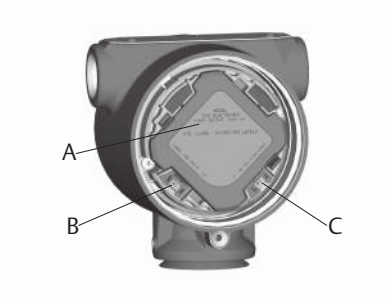

A. Feature board
B. Security
C. Alarm

4. Re-install the transmitter cover. Transmitter covers must be fully engaged so that metal contacts metal in order to meet flameproof/explosion-proof requirements.

3.4.2 Configure alarm direction

The transmitter alarm direction is set by repositioning the alarm switch. Position the switch in the HI position for fail high and in the LO position for fail low. See for more information on alarm and saturation levels.

3.4.3 Mounting considerations

For dimensional drawing information refer to .

Housing rotation

The housing can be rotated to improve field access to wiring or to better view the optional LCD display. To rotate the housing, perform the following procedure:

Procedure

1. Loosen the housing rotation set screw.
2. Turn the housing up to 180° to the left or right of its original (as shipped) position.

Note
Do not rotate the housing more than 180° without first performing a disassembly procedure (see). Over-rotation may sever the electrical connection between the sensor module and the feature board.

3. Retighten the housing rotation set screw.

Figure 3-2: Housing

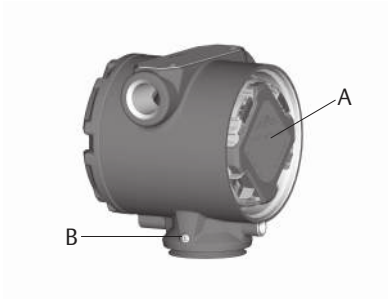

A. Feature board
B. 3/32-in. housing rotation set screw

LCD display rotation

In addition to housing rotation, the optional LCD display can be rotated in 90° increments by squeezing the two tabs, pulling out, rotating and snapping back into place.

Note
If LCD display pins are inadvertently removed from the feature board, re-insert the pins before snapping the LCD display back into place.

Field terminal side of housing

Mount the transmitter so the terminal side is accessible. Clearance of 0.75-in. (19 mm) is required for cover removal. Use a conduit plug in the unused conduit opening if the optional Process Temperature Input is not installed.

Feature board side of housing

Provide 0.75-in. (19 mm) of clearance for units without an LCD display. Three inches of clearance is required for cover removal if an LCD display is installed.

Cover installation

Always ensure a proper seal by installing the housing covers so that metal contacts metal in order to prevent performance degradation due to environmental effects. For replacement cover O-rings, use Rosemount O-rings (part number 03151-9040-0001).

Conduit entry threads

For NEMA® 4X, IP66, and IP68 requirements, use thread seal (PTFE) tape or paste on male threads to provide a watertight seal.

Cover jam screw

About this task

For transmitter housings shipped with a cover jam screw, as shown in Figure 3-3, the screw should be properly installed once the transmitter has been wired and powered up. The cover jam screw is intended to prevent the removal of the transmitter cover in flameproof environments without the use of tools. Follow these steps to install the cover jam screw:

Procedure

1. Verify the cover jam screw is completely threaded into the housing.
2. Install the transmitter housing covers and verify that metal contacts metal in order to meet flameproof/explosion-proof requirements.
3. Using an M4 hex wrench, turn the jam screw counterclockwise until it contacts the transmitter cover.
4. Turn the jam screw an additional turn counterclockwise to secure the cover. Application of excessive torque may strip the threads.
5. Verify the covers cannot be removed.

Figure 3-3: Cover Jam Screw

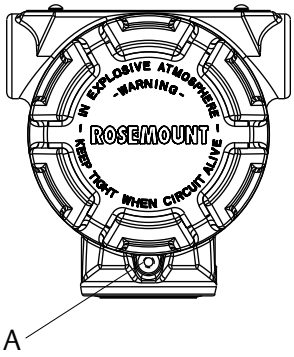

A. Cover jam screw (one per side)

Process flange orientation

Mount the process flanges with sufficient clearance for process connections. For safety reasons, place the drain/vent valves so the process fluid is directed away from possible human contact when the vents are used. In addition, consider the need for a testing or calibration input.

3.4.4 Mount the transmitter

Figure 3-4 illustrates a typical Rosemount 3051SMV installation site measuring dry gas with an orifice plate.

Figure 3-4: Typical Rosemount 3051SMV Installation Site

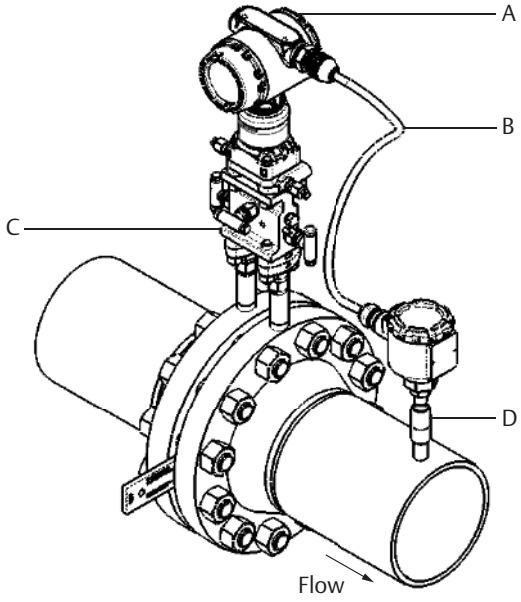

A. Rosemount 3051SMV
B. RTD cable
C. Pt 100 RTD sensor
D. Process connections

Mounting brackets

The Rosemount 3051SMV can be mounted to a 2-in. pipe or to a panel using an optional mounting bracket. The B4 Bracket (SST [Stainless steel]) option is for use with the coplanar flange process connection. shows bracket dimensions and mounting configurations for the B4 option. Other bracket options are listed in Table 3-1. When installing the transmitter to one of the optional mounting brackets, torque the bolts to 125 in-lb (0,9 N-m).

Table 3-1: Mounting Brackets

Options	Description	Mounting type	Bracket material	Bolt material
B4	Coplanar flange bracket	2-in. pipe/panel	SST	SST
B1	Traditional flange bracket	2-in. pipe	Painted CS (Carbon steel)	CS

Table 3-1: Mounting Brackets *(continued)*

Options	Description	Mounting type	Bracket material	Bolt material
B2	Traditional flange bracket	Panel	Painted CS	CS
B3	Traditional flange flat bracket	2-in. pipe	Painted CS	CS
B7	Traditional flange bracket	2-in. pipe	Painted CS	SST
B8	Traditional flange bracket	Panel	Painted CS	SST
B9	Traditional flange flat bracket	2-in. pipe	Painted CS	SST
BA	Traditional flange bracket	2-in. pipe	SST	SST
BC	Traditional flange flat bracket	2-in. pipe	SST	SST

Flange bolts

The Rosemount 3051SMV can be shipped with a coplanar flange or a traditional flange installed with four 1.75-in. flange bolts. Mounting bolts and bolting configurations for the coplanar and traditional flanges can be found in Cover installation. SST bolts supplied by Emerson are coated with a lubricant to ease installation. CS bolts do not require lubrication. No additional lubricant should be applied when installing either type of bolt. Bolts supplied by Emerson are identified by their head markings:

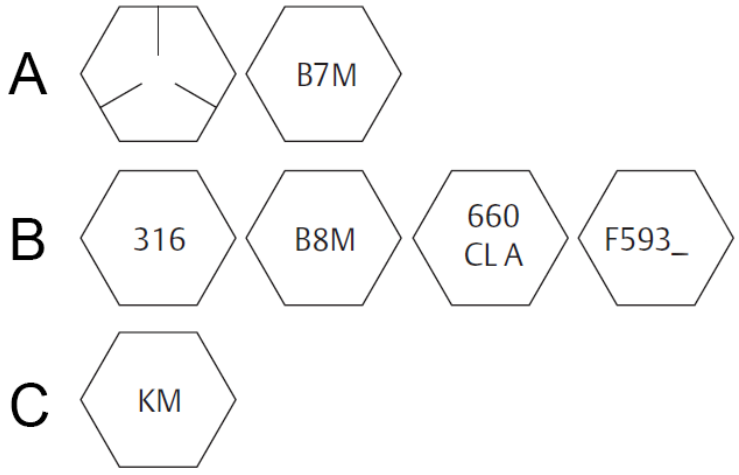

A. Carbon Steel (CS) Head Markings
B. Stainless Steel (SST) Head Markings
C. Alloy K-500 Head Marking

Note
The last digit in the F593_ head marking may be any letter between A and M.

Bolt installation

Only use bolts supplied with the 2051 or provided by Emerson Process Management as spare parts. When installing the transmitter to one of the optional mounting brackets, torque the bolts to 125 in-lb. (0,9 N-m). Use the following bolt installation procedure:

Procedure

1. Finger-tighten the bolts.
2. Torque the bolts to the initial torque value using a crossing pattern.
3. Torque the bolts to the final torque value using the same crossing pattern.

Example

Torque values for the flange and manifold adapter bolts are as follows:

Table 3-2: Bolt Installation Torque Values

Bolt material	Initial torque value	Final torque value
CS-ASTM-A449 Standard	300 in.-lb (34 N-m)	650 in.-lb (73 N-m)
316 SST—Option L4	150 in.-lb (17 N-m)	300 in.-lb (34 N-m)
ASTM-A-193-B7M—Option L5	300 in.-lb (34 N-m)	650 in.-lb (73 N-m)
ASTM-A-193 Class 2, Grade B8M—Option L8	150 in.-lb (17 N-m)	300 in.-lb (34 N-m)

Figure 3-5: Traditional Flange Bolt Configurations

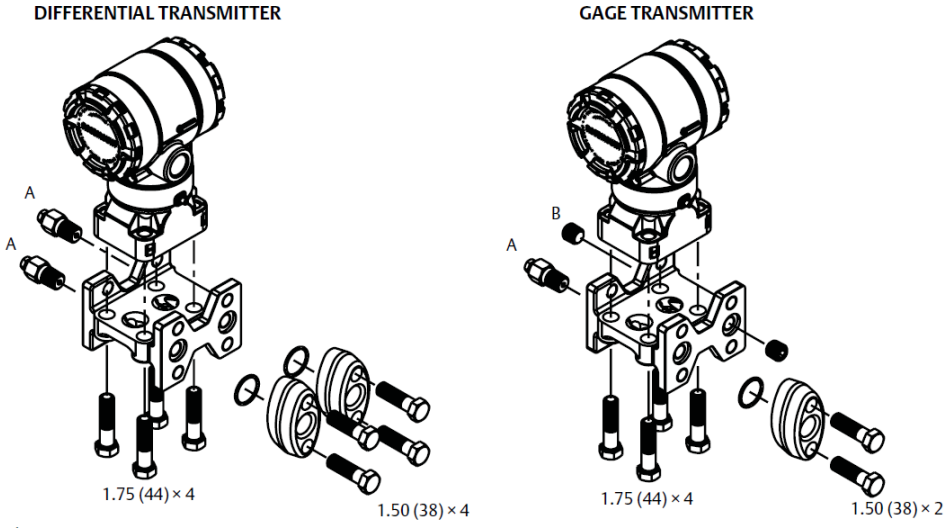

A. Drain/vent
B. Plug

Dimensions are in inches (millimeters).

Figure 3-6: Mounting Bolts and Bolt Configurations for Coplanar Flange

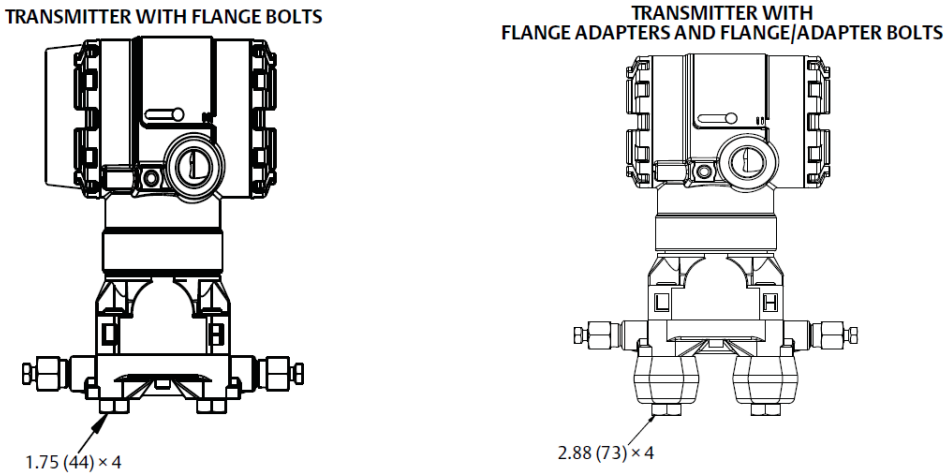

Dimensions are in inches (millimeters).

Description	Size in inches (mm)
Flange Bolts	1.75 (44)
Flange/Adapter Bolts	2.88 (73)
Manifold/Flange Bolts	2.25 (57)

Note
Rosemount 2051T transmitters are direct mount and do not require bolts for process connection.

Mounting requirements

Impulse piping configurations depend on specific measurement conditions. Refer to Figure 3-7 for examples of the following mounting configurations:

Liquid flow measurement

- Place taps to the side of the line to prevent sediment deposits on the process isolators.
- Mount the transmitter beside or below the taps so gases vent into the process line.
- Mount drain/vent valve upward to allow gases to vent.

Gas flow measurement

- Place taps in the top or side of the line.
- Mount the transmitter beside or above the taps so to drain liquid into the process line.

Steam flow measurement

- Place taps to the side of the line.
- Mount the transmitter below the taps to ensure that impulse piping will remain filled with condensate.
- In steam service above 250 °F (121 °C), fill impulse lines with water to prevent steam from contacting the transmitter directly and to ensure accurate measurement start-up.

Note
For steam or other elevated temperature services, it is important that temperatures at the transmitter process connection do not exceed the transmitter's operating limits.

Figure 3-7: Installation Examples

Liquid service	Gas service	Steam service
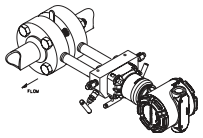	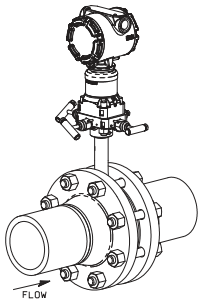	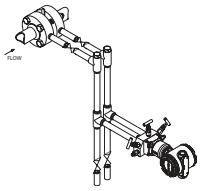

3.4.5 Process connections

About this task

The Rosemount 3051SMV flange process connection size is 1/4–18 NPT. Flange adapters with a 1/4–18 NPT to 1/2–14 NPT connection are available with the D2 option. Use a plant-approved lubricant or sealant when making the process connections. The process connections on the transmitter flange are on 2 1/8-in. (54 mm) centers to allow direct mounting to a 3- or 5-valve manifold. Rotate one or both of the flange adapters to attain connection centers of 2-in. (51 mm), 2 1/8-in. (54 mm), or 2 1/4-in. (57 mm).

⚠ CAUTION

Install and tighten all four flange bolts before applying pressure to avoid leakage. When properly installed, the flange bolts will protrude through the top of the SuperModule isolator plate. See Figure 3-8. Do not attempt to loosen or remove the flange bolts while the transmitter is in service.

Figure 3-8: SuperModule Isolator Plate

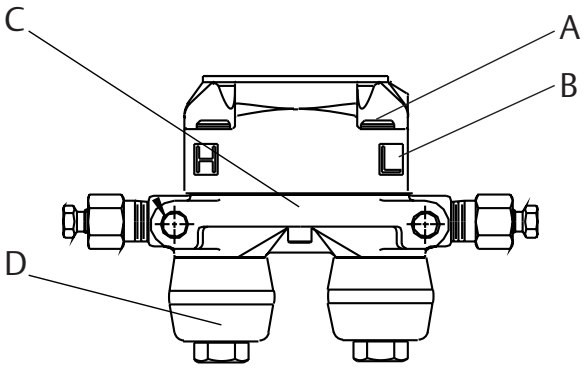

A. Bolt
B. SuperModule isolator plate
C. Coplanar flange
D. Flange adapters

To install adapters to a coplanar flange, perform the following procedure:

Procedure

1. Remove the flange bolts.
2. Leaving the flange in place, move the adapters into position with the O-rings installed.
3. Attach the adapters and the coplanar flange to the transmitter SuperModule assembly using the longer of the bolts supplied.
4. Tighten the bolts. Refer to Table 3-2 for torque specifications.

   Refer to for the correct part numbers of the flange adapters and O-rings designed for the Rosemount 3051SMV.

   Note
   The two styles of Rosemount flange adapters (Rosemount 3051S/3051/2051) each require a unique O-rings. Use only the O-ring designed for the corresponding flange adaptor.

O-rings

The two styles of Rosemount™ flange adapters (Rosemount 1151 and Rosemount 3051/2051/2024/3095) each require a unique O-ring (see Figure 3-9). Use only the O-ring designed for the corresponding flange adapter.

Figure 3-9: O-rings

⚠ WARNING

Failure to install proper flange adapter O-rings may cause process leaks, which can result in death or serious injury. The two flange adapters are distinguished by unique O-ring grooves. Only use the O-ring that is designed for its specific flange adapter, as shown below.

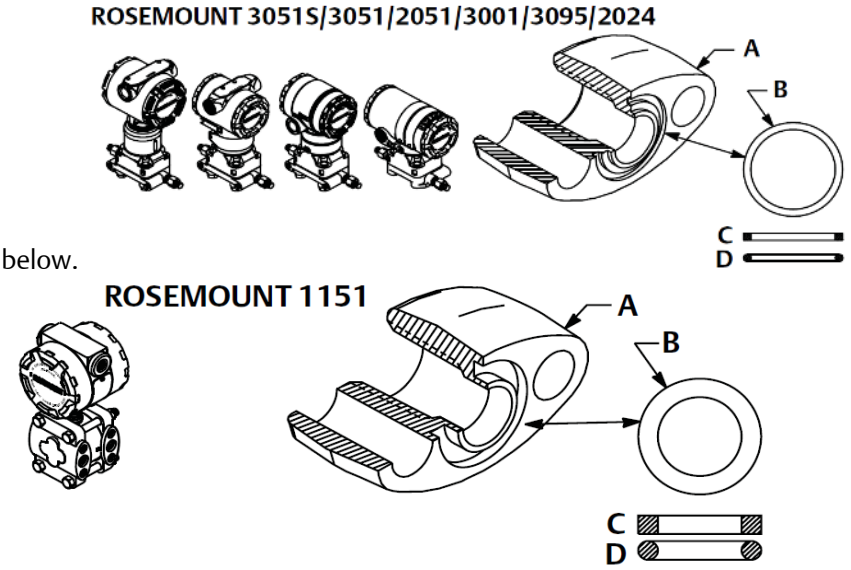

A. Flange adapter
B. O-ring
C. PFTE based
D. Elastomer

⚠ WARNING

When compressed, PTFE O-rings tend to *cold flow*, which aids in their sealing capabilities.

Note
You should replace PTFE O-rings if you remove the flange adapter.

Impulse piping considerations

The piping between the process and the transmitter must accurately transfer the pressure to obtain accurate measurements. There are many possible sources of error: pressure transfer, leaks, friction loss (particularly if purging is used), trapped gas in a liquid line, liquid in a gas line, density variations between the legs, and plugged impulse piping.

The best location for the transmitter in relation to the process pipe depends on the process itself. Use the following guidelines to determine transmitter location and placement of impulse piping:

- Keep impulse piping as short as possible.

- For liquid service, slope the impulse piping at least 1 in. per ft. (8 cm per m) upward from the transmitter toward the process connection.
- For gas service, slope the impulse piping at least 1 in. per ft. (8 cm per m) downward from the transmitter toward the process connection.
- Avoid high points in liquid lines and low points in gas lines.
- Make sure both impulse legs are the same temperature.
- Use impulse piping large enough to avoid friction effects and blockage.
- Vent all gas from liquid piping legs.
- When using a sealing fluid, fill both piping legs to the same level.
- When purging, make the purge connection close to the process taps and purge through equal lengths of the same size pipe. Avoid purging through the transmitter.
- Keep corrosive or hot, above 250 °F (121 °C), process material out of direct contact with the SuperModule process connection and flanges.
- Prevent sediment deposits in the impulse piping.
- Keep the liquid head balanced on both legs of the impulse piping.

Note
Take necessary steps to prevent process fluid from freezing within the process flange to avoid damage to the transmitter.

Note
Verify transmitter zero point after installation. To reset zero point, refer to .

3.4.6 Connect wiring and power up

It is recommended to use twisted pair wiring. To ensure proper communication, use 24 to 14 AWG wire, and do not exceed 5000 ft. (1500 m).

About this task

Note
Proper electrical installation is necessary to prevent errors due to improper grounding and electrical noise. Shielded wiring is recommended for environments with high EMI/RFI levels. Shielded wiring is required in order to comply with NAMUR requirements.

Figure 3-10: Terminal Blocks

Without optional process temperature connection	With optional process temperature connection

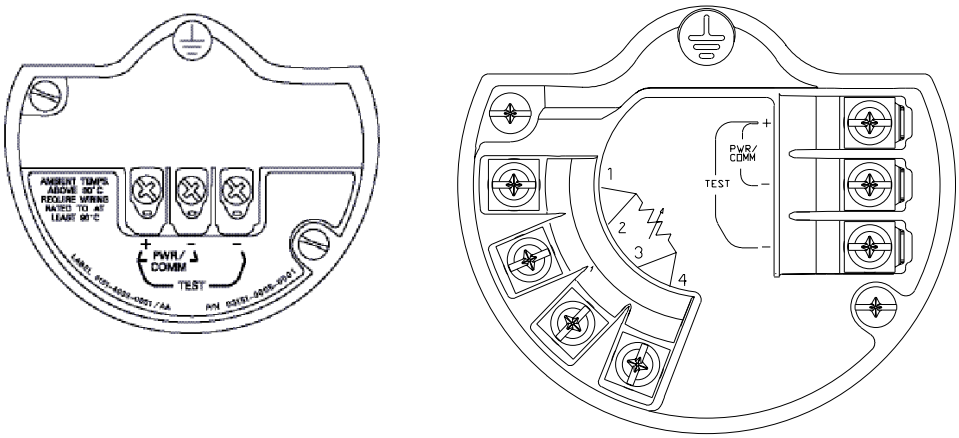

To make connections, perform the following procedure:

Procedure

1. Remove the cover on the field terminals side of the housing.
2. Connect the positive lead to the “PWR/COMM +” terminal, and the negative lead to the “PWR/COMM –” terminal.

   Note
   Do not connect the power across the test terminals. Power could damage the test diode in the test connection.

3. If the optional process temperature input is not installed, plug and seal the unused conduit connection. If the optional process temperature input is being utilized, see Install optional process temperature input (Pt 100 RTD sensor) for more information. When the enclosed pipe plug is utilized in the conduit opening, it must be installed with a minimum engagement of five threads in order to comply with flameproof/explosion-proof requirements.
4. If applicable, install wiring with a drip loop. Arrange the drip loop so the bottom is lower than the conduit connections and the transmitter housing.
5. Reinstall the housing cover and tighten so that metal contacts metal to meet flameproof/explosion-proof requirements.

Example

Figure 3-11 shows the wiring connections necessary to power a Rosemount 3051SMV and enable communications with a Hand-held Field Communicator.

Figure 3-11: Transmitter Wiring

Without optional process temperature connection	With optional process temperature connection

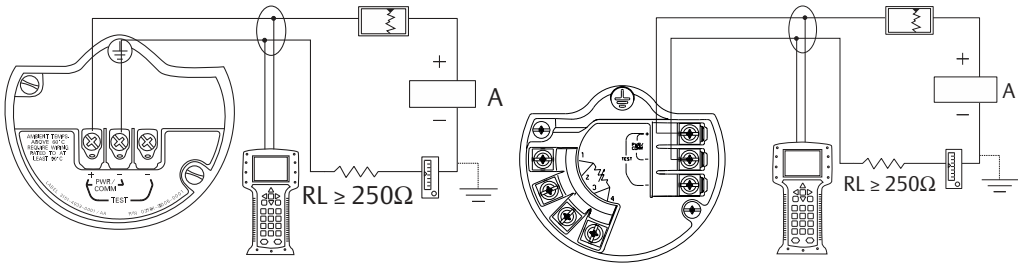

A. Power supply

Note
Installation of the transient protection terminal block does not provide transient protection unless the Rosemount 3051SMV housing is properly grounded. See Grounding for more information.

Install optional process temperature input (Pt 100 RTD sensor)

About this task

Note
To meet ATEX/IECEx Flameproof certification, only ATEX/IECEx Flameproof cables (temperature input code C30, C32, C33, or C34) may be used.

Procedure

1. Mount the Pt 100 RTD sensor in the appropriate location.

   Note
   Use shielded four-wire cable for the process temperature connection.

2. Connect the RTD cable to the Rosemount 3051SMV by inserting the cable wires through the unused housing conduit and connect to the four screws on the transmitter terminal block. An appropriate cable gland should be used to seal the conduit opening around the cable.
3. Connect the RTD cable shield wire to the ground lug in the housing.

Figure 3-12: Rosemount 3051SMV RTD Wiring Connection

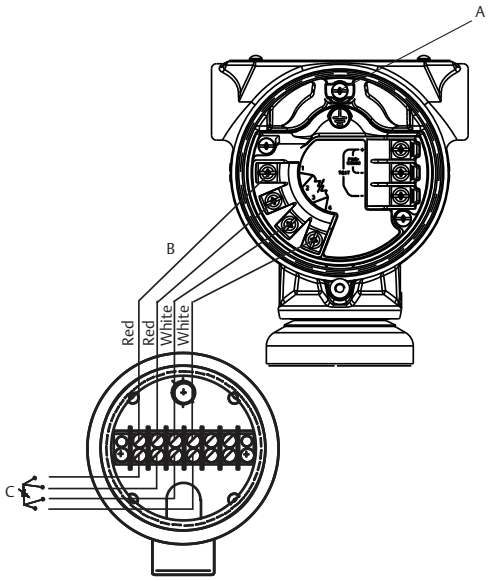

A. Ground lug
B. RTD cable assembly wires
C. Pt 100 RTD sensor

Three-wire RTD

A four-wire Pt 100 RTD is required to maintain published performance specifications. A three-wire Pt 100 RTD may be used with degraded performance. If connecting to a three-wire RTD, use a four-wire cable to connect the Rosemount 3051SMV terminal block to the RTD connection head. Within the RTD connection head, connect two of the same colored wires from the Rosemount 3051SMV to the single colored wire of the RTD sensor.

Surges/transients

The transmitter will withstand electrical transients of the energy level usually encountered in static discharges or induced switching transients. However, high-energy transients, such as those induced in wiring from nearby lightning strikes, can damage the transmitter.

Optional transient protection terminal block

The transient protection terminal block can be ordered as an installed option (code T1 in the transmitter model number) or as a spare part to retrofit existing Rosemount 3051SMV in the field. For a complete listing of spare part numbers for transient protection terminal blocks, refer to . A lightning bolt symbol on a terminal block identifies it as having transient protection.

Note
Grounding the transmitter case using the threaded conduit connection may not provide a sufficient ground. The transient protection terminal block (option code T1) will not provide transient protection unless the transmitter case is properly grounded. See

Grounding to ground the transmitter case. Do not run transient protection ground wire with signal wiring; the ground wire may carry excessive current if a lightning strike occurs.

Signal wire grounding

Do not run signal wiring in conduit or open trays with power wiring, or near heavy electrical equipment. Ground the shield of the signal wiring at any one point on the signal loop. See Figure 3-13. The negative terminal of the power supply is a recommended grounding point.

Figure 3-13: Signal Wire Grounding

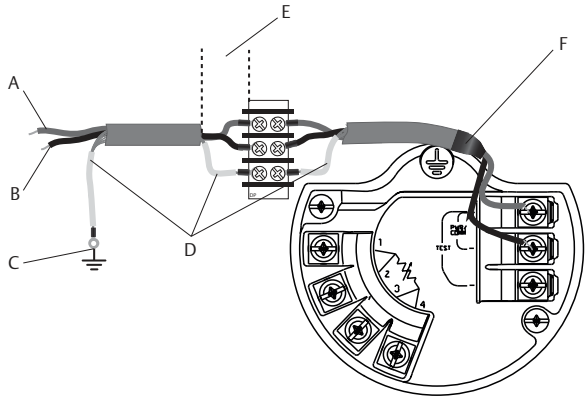

A. *Positive*
B. *Negative*
C. *Connect shield back to the power supply negative terminal*
D. *Insulate shield*
E. *Minimize distance*
F. *Trim shield and insulate*

Power supply 4–20 mA transmitters

The DC power supply should provide power with less than two percent ripple. Total resistance load is the sum of resistance from signal leads and the load resistance of the controller, indicator, and related pieces. Note that the resistance of intrinsic safety barriers, if used, must be included.

See for transmitter resistance load limits.

Note
A minimum loop resistance of 250 ohms is required to communicate with a Field Communicator. If a single power supply is used to power more than one Rosemount 3051SMV, the power supply used and circuitry common to the transmitters should not have more than 20 ohms of impedance at 1200 Hz.

3.4.7 Conduit electrical connector wiring (option GE or GM)

For Rosemount 3051SMV with conduit electrical connectors GE or GM, refer to the cordset manufacturer's installation instructions for wiring details. For FM Intrinsically Safe, non-

incendive hazardous locations, install in accordance with Rosemount drawing 03151-1009 to maintain outdoor rating (NEMA® 4X and IP66.) For more information, see .

3.4.8 Grounding

Transmitter case

Always ground the transmitter case in accordance with national and local electrical codes. The most effective transmitter case grounding method is a direct connection to earth ground with minimal impedance (< 1Ω). Methods for grounding the transmitter case include:

Internal ground connection

The internal ground connection screw is inside the terminal side of the electronics housing. The screw is identified by a ground symbol (⏚), and is standard on all Rosemount 3051SMV.

Figure 3-14: Internal Ground Connection

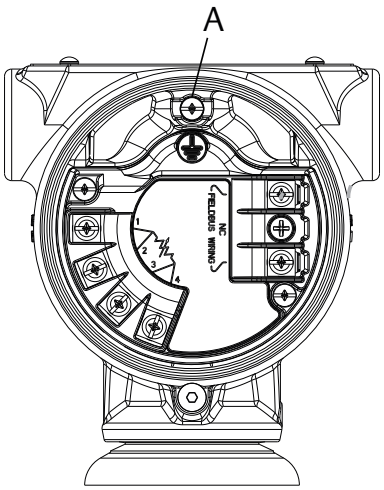

A. Ground lug

External ground connection

The external ground connection is on the outside of the SuperModule housing. The connection is identified by a ground symbol (⏚). An external ground assembly is included with the option codes shown in Table 3-3 or is available as a spare part (03151-9060-0001).

Figure 3-15: External Ground Connection

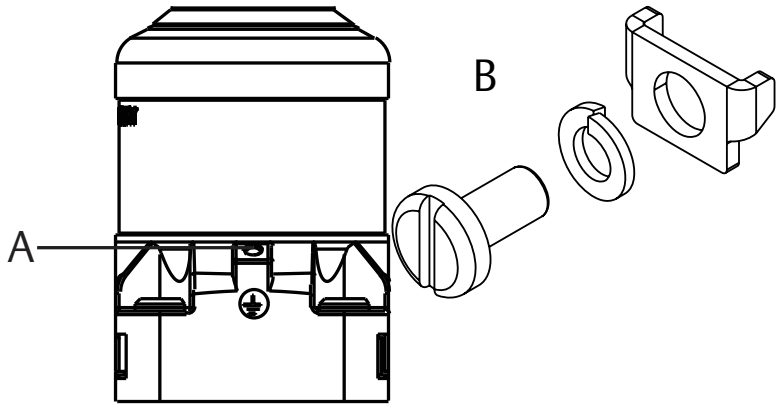

A. External ground lug
B. External ground assembly (03151-9060-0001)

Table 3-3: External Ground Screw Approval Option Codes

Option code	Description
E1	ATEX Flameproof
I1	ATEX Intrinsic Safety
N1	ATEX Type n
ND	ATEX Dust
E4	TIIS Flameproof
K1	ATEX Flameproof, Intrinsic Safety, Type n, Dust (combination of E1, I1, N1, and ND)
E7	IECEx Flameproof, Dust Ignition-proof
N7	IECEx Type n
K7	IECEx Flameproof, Dust Ignition-proof, Intrinsic Safety, and Type n (combination of E7, I7, and N7)
KA	ATEX and CSA Explosion-proof, Intrinsically Safe, Division 2 (combination of E1, E6, I1, and I6)
KC	FM and ATEX Explosion-proof, Intrinsically Safe, Division 2 (combination of E5, E1, I5, and I1)
T1	Transient terminal block
D4	External ground screw assembly

3.5 Rosemount 305 and 304 Manifolds

The Rosemount 305 Integral Manifold is available in two designs: coplanar and traditional. The traditional Rosemount 305 can be mounted to most primary elements with mounting adapters.

Rosemount 305 Integral Coplanar	Rosemount 305 Integral Traditional
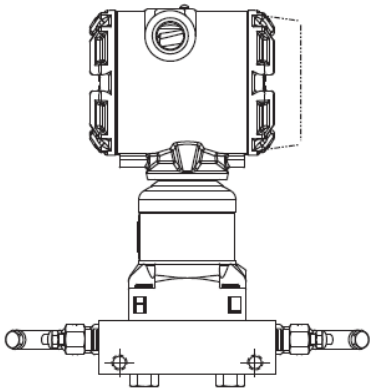	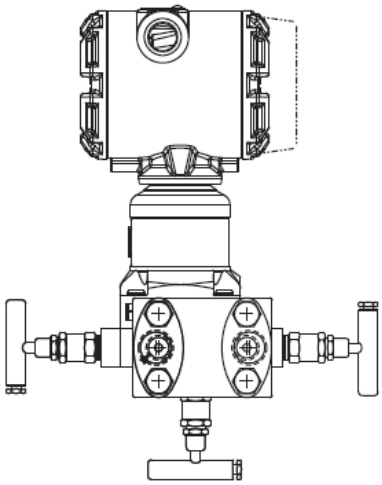

The Rosemount 304 comes in two basic styles: traditional (flange X flange and flange X pipe) and wafer. The Rosemount 304 Traditional Manifold comes in 2-, 3-, and 5-valve configurations. The Rosemount 304 Wafer Manifold comes in 3- and 5-valve configurations.

Rosemount 304 Traditional	Rosemount 304 Wafer

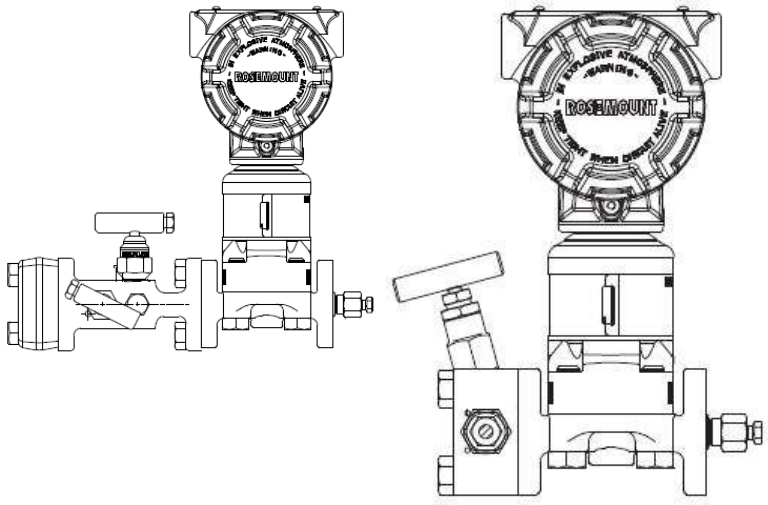

3.5.1 Install Rosemount™ 305 Integral Manifold

To install a Rosemount 305 Integral Manifold to a Rosemount 3051 Transmitter:

Procedure

1. Inspect the PTFE sensor module O-rings.

   You may reuse undamaged O-rings. If the O-rings are damaged (if they have nicks or cuts, for example), replace with O-rings designed for Rosemount transmitters.

   Important
   If replacing the O-rings, take care not to scratch or deface the O-ring grooves or the surface of the isolating diaphragm while you remove the damaged O-rings.

2. Install the Integral Manifold on the sensor module. Use the four 2.25-in. manifold bolts for alignment. Finger tighten the bolts; then tighten the bolts incrementally in a cross pattern as seen in Figure 3-16 to final torque value.

   See Flange bolts for complete bolt installation information and torque values. When fully tightened, the bolts should extend through the top of the sensor module housing.

Figure 3-16: Bolt Tightening Pattern

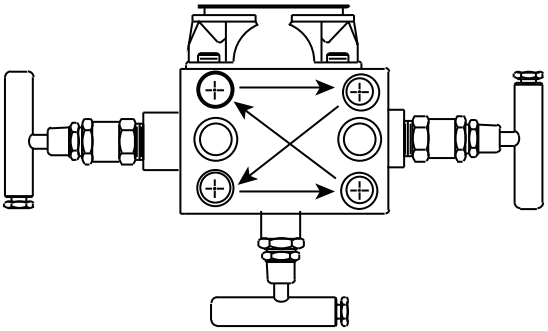

3. If you have replaced the PTFE sensor module O-rings, re-tighten the flange bolts after installation to compensate for cold flow of the O-rings.

3.5.2 Install Rosemount™ 304 Conventional Manifold

To install a Rosemount 304 Conventional Manifold to a Rosemount 3051 Transmitter:

About this task

See Safety messages for complete warning information.

Procedure

1. Align the Conventional Manifold with the transmitter flange. Use the four manifold bolts for alignment.
2. Finger tighten the bolts; then tighten the bolts incrementally in a cross pattern to final torque value.

   See Flange bolts for complete bolt installation information and torque values. When fully tightened, the bolts should extend through the top of the sensor module housing.
3. Leak-check assembly to maximum pressure range of transmitter.

3.5.3 Manifold operation

⚠ WARNING

Improper installation or operation of manifolds may result in process leaks, which may cause death or serious injury.

Always perform a zero trim on the transmitter/manifold assembly after installation to eliminate any shift due to mounting effects. See Sensor trim overview.

Coplanar transmitters

Operate three and five-valve manifolds

Performing zero trim at static line pressure

About this task

In normal operation, the two isolate (block) valves between the process ports and the transmitter will be open, and the equalize valve will be closed.

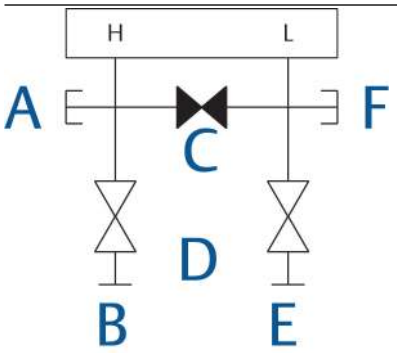

A. Drain/vent valve
B. Isolate (open)
C. Equalize (closed)
D. Process
E. Isolate (open)
F. Drain/vent valve

Procedure

1. To zero trim the transmitter, close the isolate valve on the low side (downstream) side of the transmitter.

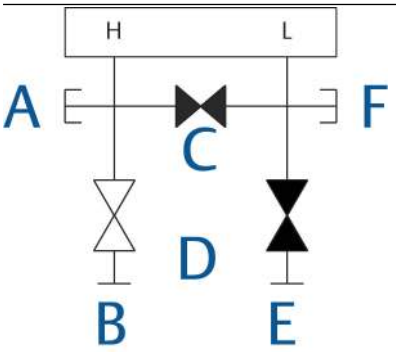

A. Drain/vent valve
B. Isolate (open)
C. Equalize (closed)
D. Process
E. Isolate (closed)
F. Drain/vent valve

2. Open the equalize valve to equalize the pressure on both sides of the transmitter.
   The manifold is now in the proper configuration for performing a zero trim on the transmitter.

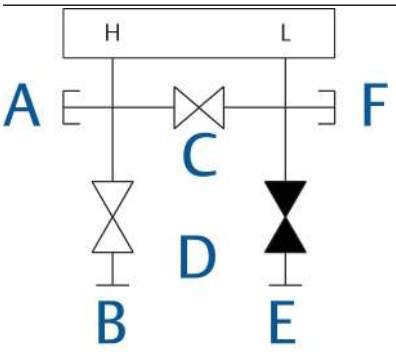

A. Drain/vent valve
B. Isolate (open)
C. Equalize (open)
D. Process
E. Isolate (closed)
F. Drain/vent valve

3. After zeroing the transmitter, close the equalize valve.

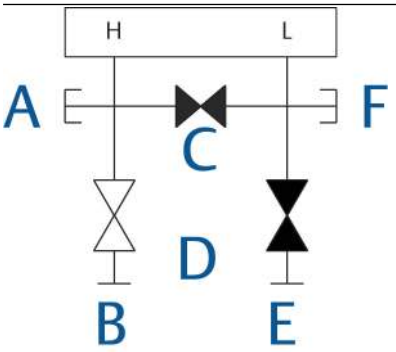

A. Drain/vent valve
B. Isolate (open)
C. Equalize (closed)
D. Process
E. Isolate (closed)
F. Drain/vent valve

4. Finally, to return the transmitter to service, open the low side isolate valve.

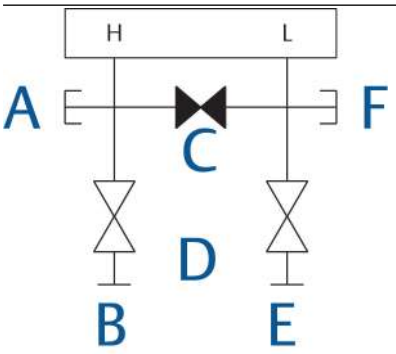

A. Drain/vent valve
B. Isolate (open)
C. Equalize (closed)
D. Process
E. Isolate (open)
F. Drain/vent valve

Operate five-valve natural gas manifold

Performing zero trim at static line pressure

About this task

5-valve natural gas configurations shown:

In normal operation, the two isolate (block) valves between the process ports and the transmitter will be open, and the equalize valves will be closed. Vent valves may be open or closed.

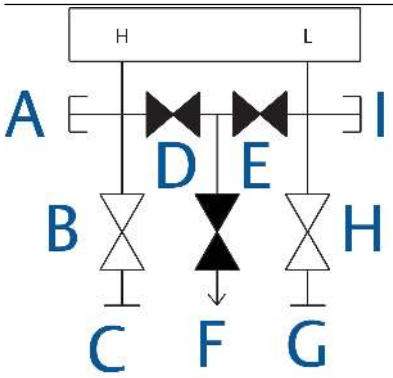

A. (Plugged)
B. Isolate (open)
C. Process
D. Equalize (closed)
E. Equalize (closed)
F. Drain vent (closed)
G. Process
H. Isolate (open)
I. (Plugged)

Procedure

1. To zero trim the transmitter, first close the isolate valve on the low pressure (downstream) side of the transmitter and the vent valve.

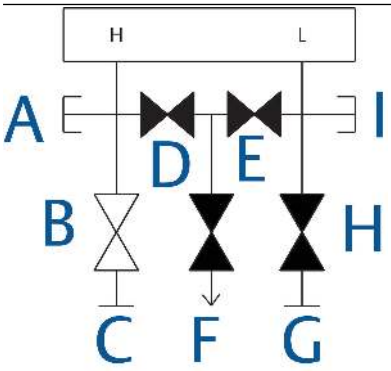

A. (Plugged)
B. Isolate (open)
C. Process
D. Equalize (closed)
E. Equalize (closed)
F. Drain vent (closed)
G. Process
H. Isolate (closed)
I. (Plugged)

2. Open the equalize valve on the high pressure (upstream) side of the transmitter.

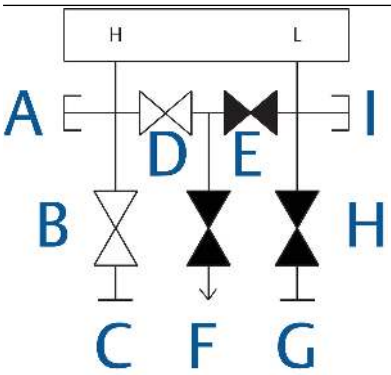

A. (Plugged)
B. Isolate (open)
C. Process
D. Equalize (open)
E. Equalize (closed)
F. Drain vent (closed)
G. Process
H. Isolate (closed)
I. (Plugged)

3. Open the equalize valve on the low pressure (downstream) side of the transmitter.

The manifold is now in the proper configuration for zeroing the transmitter.

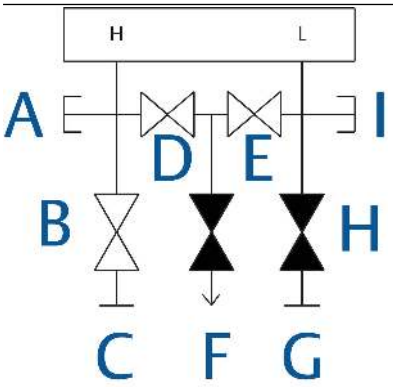

A. (Plugged)
B. Isolate (open)
C. Process
D. Equalize (open)
E. Equalize (open)
F. Drain vent (closed)
G. Process
H. Isolate (closed)
I. (Plugged)

4. After zeroing the transmitter, close the equalize valve on the low pressure (downstream) side of the transmitter.

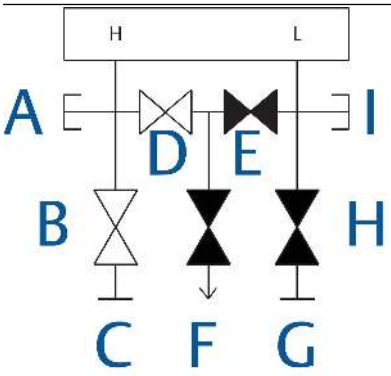

A. (Plugged)
B. Isolate (open)
C. Process
D. Equalize (open)
E. Equalize (closed)
F. Drain vent (closed)
G. Process
H. Isolate (closed)
I. (Plugged)

5. Close the equalize valve on the high pressure (upstream) side.

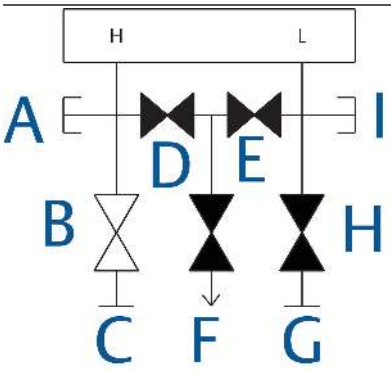

A. (Plugged)
B. Isolate (open)
C. Process
D. Equalize (closed)
E. Equalize (closed)
F. Drain vent (closed)
G. Process
H. Isolate (closed)
I. (Plugged)

6. Finally, to return the transmitter to service, open the low side isolate valve and vent valve.

The vent valve can remain open or closed during operation.

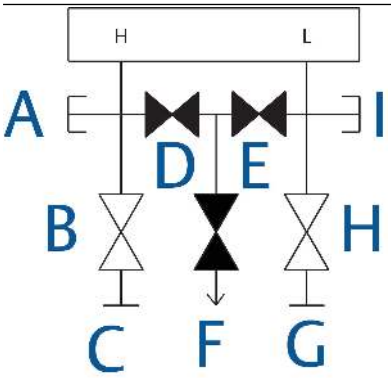

A. (Plugged)
B. Isolate (open)
C. Process
D. Equalize (closed)
E. Equalize (closed)
F. Drain vent (closed)
G. Process
H. Isolate (open)
I. (Plugged)

In-line transmitters

2-valve and block and bleed style manifolds

Isolating the transmitter

About this task

In normal operation, the isolate (block) valve between the process port and transmitter will be open and the test/vent valve will be closed. On a block and bleed style manifold, a single block valve provides transmitter isolation, and a bleed screw provides drain/vent capabilities.

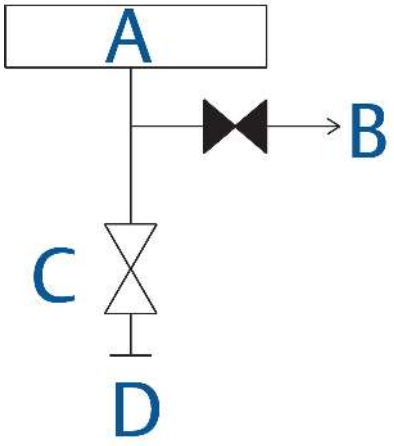

A. Transmitter
B. Vent (closed)
C. Isolate
D. Process (open)

Procedure

1. To isolate the transmitter, close the isolate valve.

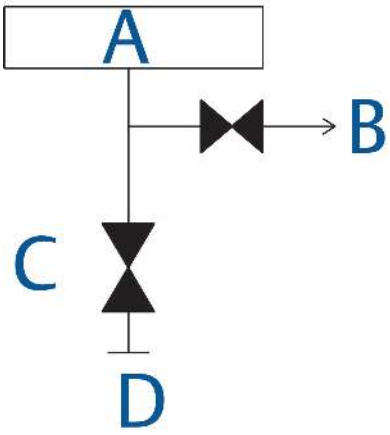

A. Transmitter
B. Vent (closed)
C. Isolate
D. Process (closed)

2. To bring the transmitter to atmospheric pressure, open the vent valve or bleed screw.

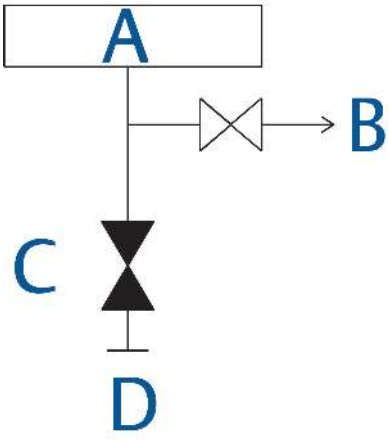

A. Transmitter
B. Vent (open)
C. Isolate
D. Process (closed)

Note
A ¼-in. male NPT pipe plug may be installed in the test/vent port; you will need to remove it with a wrench in order to vent the manifold properly.
Always use caution when venting directly to atmosphere.

3. After venting to atmosphere, perform any required calibration and then close the test/vent valve or replace the bleed screw.

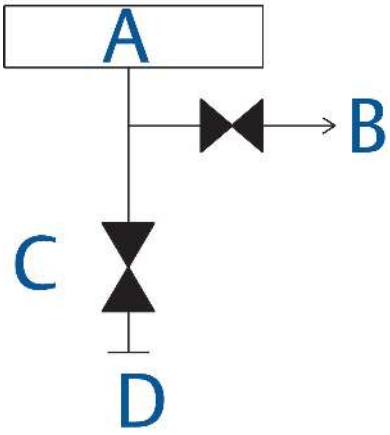

A. Transmitter
B. Vent (closed)
C. Isolate
D. Process (closed)

4. Open the isolate (block) valve to return the transmitter to service.

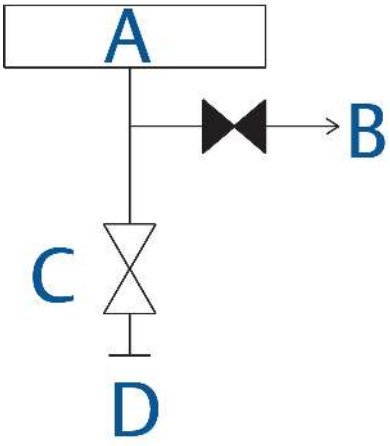

A. Transmitter
B. Vent (closed)
C. Isolate
D. Process (open)

Adjust valve packing

Over time, the packing material inside a Rosemount™ manifold may require adjustment in order to continue to provide proper pressure retention. Not all Rosemount manifolds have this adjustment capability. The Rosemount manifold model number will indicate what type of stem seal or packing material has been used.

About this task

The following steps are provided as a procedure to adjust valve packing:

Procedure

1. Remove all pressure from device.
2. Loosen manifold valve jam nut.
3. Tighten manifold valve packing adjuster nut ¼ turn.
4. Tighten manifold valve jam nut.
5. Re-apply pressure and check for leaks.

Postrequisites

Repeat the above steps if necessary. If the above procedure does not result in proper pressure retention, replace the complete manifold.

Figure 3-17: Valve Components

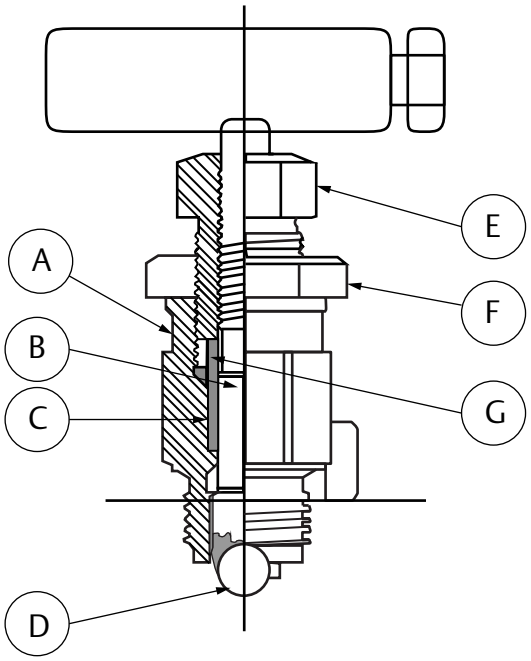

A. Bonnet
B. Stern
C. Packing
D. Ball seat
E. Packing adjuster
F. Jam nut
G. Packing follower

4 Operation and Maintenance

4.1 Overview

This section contains information on operating and maintaining Rosemount™ 3051S MultiVariable™ Transmitters (Rosemount 3051SMV). Instructions for performing configuration and calibration procedures are given for Field Communicator version 2.0 or later, AMS Device Manager version 9.0 or later, and Engineering Assistant version 6.3 or later. Screen shots for this section are taken from AMS Device Manager version 9.0; Engineering Assistant screens will look similar and follow the same instructions for use and navigation. For convenience, Field Communicator Fast Key sequences are labeled “Fast Keys” for each software function below the appropriate headings.

Based on the configuration ordered, some measurements (i.e. static pressure, process temperature) and/or calculation types (i.e. mass, volumetric, and energy flow) may not be available for all fluid types. Available measurements and/or calculation types are determined by the multivariable type and measurement type codes ordered. See Ordering information for more information.

All screens in this section are shown for multivariable type M (fully compensated mass and energy flow), measurement type 1 (differential pressure, static pressure, and process temperature). Field Communicator Fast Keys are given for both multivariable type M and P (direct process variable output) with measurement type 1. Field Communicator Fast Keys and screens for other multivariable types and measurement types may vary.

4.2 Safety messages

Procedures and instructions in this section may require special precautions to ensure the safety of the personnel performing the operation. Information that raises potential safety issues is indicated with a warning symbol (⚠). Refer to the following safety messages before performing an operation preceded by this symbol.

⚠ WARNING

Failure to follow these installation guidelines could result in death or serious injury.

- Ensure only qualified personnel perform the installation.

Explosions could result in death or serious injury.

- Do not remove the transmitter cover in explosive atmospheres when the circuit is live.
- Before connecting a handheld communicator in an explosive atmosphere, make sure the instruments in the loop are installed in accordance with intrinsically safe or non-incendive field wiring practices.
- Both transmitter covers must be fully engaged to meet explosion-proof requirements.
- Verify the operating atmosphere of the transmitter is consistent with the appropriate hazardous locations certifications.

Electrical shock could cause death or serious injury.

- If the sensor is installed in a high-voltage environment and a fault or installation error occurs, high voltage may be present on transmitter leads and terminals.
- Use extreme caution when making contact with the leads and terminals.

Process leaks could result in death or serious injury.

- Install and tighten all four flange bolts before applying pressure.
- Do not attempt to loosen or remove flange bolts while the transmitter is in service.
- Replacement equipment or spare parts not approved by Emerson™ for use as spare parts could reduce the pressure retaining capabilities of the transmitter and may render the instrument dangerous.
- Use only bolts supplied or sold by Emerson as spare parts.

Improper assembly of manifolds to traditional flange can damage sensor module.

- For safe assembly of manifold to traditional flange, bolts must break back plane of flange web (i.e., bolt hole) but must not contact sensor module housing.

Improper installation or repair of the SuperModule™ assembly with high pressure option (P0)

could result in death or serious injury.

- For safe assembly, the high pressure SuperModule assembly must be installed with ASTM A193

  Class 2 Grade B8M Bolts and either a Rosemount 305 Manifold or a DIN-compliant traditional flange.

Static electricity can damage sensitive components.

Observe safe handling precautions for static-sensitive components.

4.3 Transmitter calibration

4.3.1 Calibration overview

Complete configuration and calibration of the Rosemount 3051SMV involves the following tasks:

Configure the output parameters

- Basic setup screen
- Set process variable units
- Set primary variable
- Rerange
- Set transfer function (direct process variable feature board only)
- Set damping

Calibrate the sensor (DP, P, and/or T)

For each sensor, perform:

- Sensor trim overview
- Zero trim or Upper and lower sensor trim

Calibrate the 4–20 mA output

About this task

- 4–20 mA analog trim (see Analog output trim); or
- 4–20 mA scaled output trim (see Scaled analog output trim)

Figure 4-1 summarizes the data flow for the Rosemount 3051SMV. Data flows from left to right, and a parameter change affects all values to the right of the changed parameter.

Figure 4-1: Transmitter Data Flow

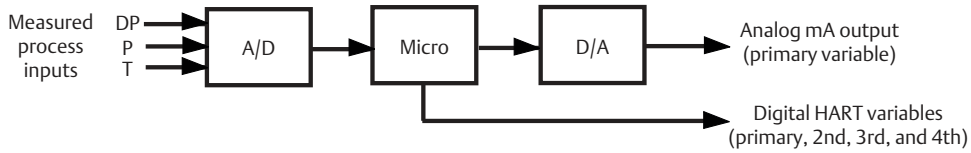

Data flow can be summarized in four major steps:

Procedure

1. A change in a process variable (DP, P, and/or T) corresponds to a change in the sensor output (Sensor Signal).
2. The sensor signal is converted to a digital format that is understood by the microprocessor (Analog-to-Digital Signal Conversion).
3. Corrections and flow calculations are performed in the microprocessor to obtain a digital representation of the process output variables.
4. The Digital Primary Variable (PV) is converted to an analog value (Digital-to-Analog Signal Conversion).

Note
Coplanar transmitter configurations measuring gage pressure and process temperature (measurement 5) will report as the pressure as differential pressure. This will be reflected on the LCD display, nameplate, digital interfaces, and other user interfaces.

4.3.2 Sensor trim overview

Trim the sensors using either sensor or zero trim functions. Trim functions vary in complexity and are application-dependent. Both trim functions alter the transmitter's interpretation of the input signal.

Zero trim

Zero trim is a single-point offset adjustment. It is useful for compensating for mounting position effects and is most effective when performed with the transmitter installed in its final mounting position. Since this correction maintains the slope of the characterization curve, it should not be used in place of a sensor trim over the full sensor range.

When performing a zero trim with a manifold, refer to Rosemount 305 and 304 Manifolds.

Note
The transmitter must be within five percent or less of the maximum span of true zero (zero-based) in order to calibrate with zero trim function.

The transmitter will not allow the user to perform a zero trim on an absolute static pressure sensor. To correct mounting position effects on the absolute static pressure sensor, perform a lower sensor trim. The lower sensor trim function provides an offset correction similar to the zero trim function, but it does not require zero-based input.

Upper and lower sensor trim

Sensor trim is a two-point sensor calibration where two end-point pressures are applied, and all output is linearized between them. Always adjust the lower sensor trim value first to establish the correct offset. Adjustment of the upper sensor trim value provides a slope correction to the characterization curve based on the lower sensor trim value. The trim values allow the user to optimize performance over a specified measuring range at the calibration temperature.

4.3.3 Differential pressure sensor calibration

Mass and energy flow Fast Keys	1, 2, 5, 3
Direct process variable output Fast Keys	1, 2, 4, 3

The Differential Pressure Calibration tab allows the user to complete a zero trim procedure or a full DP sensor trim, see Figure 4-2.

Figure 4-2: Calibration - Differential Pressure Calibration Tab

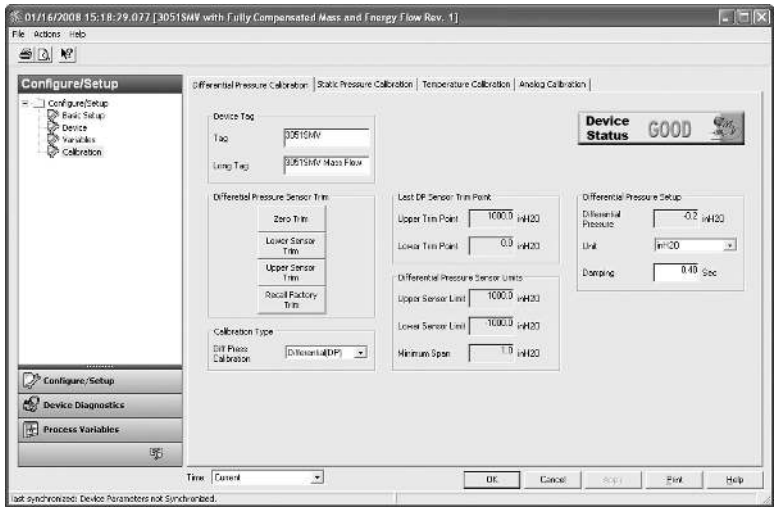

Zero trim

Zero trim is a single-point offset adjustment. It is useful for compensating for mounting position effects and is most effective when performed with the transmitter installed in its final mounting position. Since this correction maintains the slope of the characterization curve, it should not be used in place of a sensor trim over the full sensor range.

When performing a zero trim with a manifold, refer to Rosemount 305 and 304 Manifolds.

Note
The transmitter must be within five percent or less of the maximum span of true zero (zero-based) in order to calibrate with zero trim function.

The transmitter will not allow the user to perform a zero trim on an absolute static pressure sensor. To correct mounting position effects on the absolute static pressure sensor, perform a lower sensor trim. The lower sensor trim function provides an offset correction similar to the zero trim function, but it does not require zero-based input.

Upper and lower sensor trim

Sensor trim is a two-point sensor calibration where two end-point pressures are applied, and all output is linearized between them. Always adjust the lower sensor trim value first to establish the correct offset. Adjustment of the upper sensor trim value provides a slope correction to the characterization curve based on the lower sensor trim value. The trim values allow the user to optimize performance over a specified measuring range at the calibration temperature.

Calibration type

The calibration type drop-down menu allows the user to note the type of device last used to calibrate the sensor (either Differential, Gage, or Absolute). This field does not affect the calibration of the device.

Recall factory trim

The Recall Factory Trim button will restore the transmitter to the original factory characterization curve. The Recall Factory Trim button can be useful for recovering from an inadvertent zero trim or inaccurate pressure source.

When the recall factory trim function is used, the transmitter's upper and lower trim values are set to the values configured at the factory. If custom trim values were specified when the transmitter was ordered, the device will recall those values. If custom trim values were not specified, the device will recall the upper and lower sensor limits.

Last DP sensor trim point

The current upper and lower trim points can be seen under the Last DP Sensor Trim Point heading.

4.3.4 Static pressure sensor calibration

Mass and energy flow Fast Keys	1, 2, 5, 4
Direct process variable output Fast Keys	1, 2, 4, 4

Figure 4-3: Calibration - Static Pressure Calibration Tab

The Static Pressure Calibration tab allows the user to complete either a zero trim procedure or a full SP sensor trim.

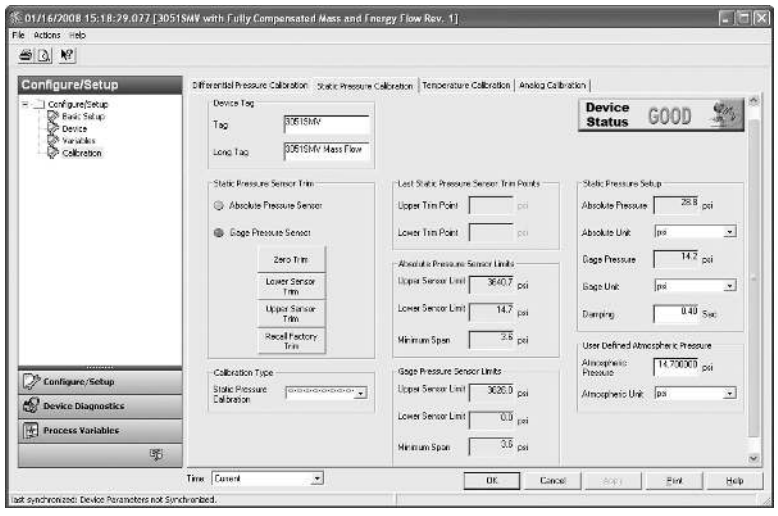

Zero trim and lower sensor trim

The type of static pressure sensor equipped in the transmitter can be determined by referring to the Static Pressure Sensor Type heading. This determines whether a zero trim (gage sensor) or lower sensor trim (absolute sensor) required to correct for mounting position effects.

To perform a zero trim on a gage static pressure sensor, select the Zero Trim button under the Static Pressure Sensor Trim heading and follow the on-screen prompts. The transmitter must be within five percent or less of the maximum span of true zero (zero-based) in order to calibrate with zero trim function.

To correct for mounting position effects on transmitters equipped with an absolute static pressure sensor, perform a lower sensor trim. This is accomplished by selecting the Lower Sensor Trim button and following the on-screen prompts. The lower sensor trim function provides an offset correction similar to the zero trim function, but it does not require a zero-based input.

Static pressure full sensor trim

To perform a Static Pressure Full Sensor Trim, perform the following procedure:

Procedure

1. Select the Lower Sensor Trim button and follow the on-screen prompts.
2. Select the Upper Sensor Trim button and follow the on-screen prompts.

Example

Note
It is possible to degrade the performance of the transmitter if the full sensor trim is done improperly or with inaccurate calibration equipment. Use a pressure input source that is at least three times more accurate than the transmitter and allow the pressure input to stabilize for ten seconds before entering any values.

Recall factory trim

The Recall Factory Trim button will restore the transmitter to the original factory characterization curve. The Recall Factory Trim button can be useful for recovering from an inadvertent zero trim or inaccurate pressure source.

When the recall factory trim function is used, the transmitter's upper and lower trim values are set to the values configured at the factory. If custom trim values were specified when the transmitter was ordered, the device will recall those values. If custom trim values were not specified, the device will recall the upper and lower sensor limits.

Last static pressure sensor trim

The current upper and lower trim points can be seen under the Last Static Pressure Sensor Trim Points heading.

Calibration type

The calibration type drop-down menu allows the user to note the type of device last used to calibrate the sensor (either Differential, Gage, or Absolute). This field does not affect the calibration of the device.

4.3.5 Process temperature sensor calibration

Mass and energy flow Fast Keys	1, 2, 5, 5
Direct process variable output Fast Keys	1, 2, 4, 5

The Temperature Calibration tab allows the user to perform a sensor trim and configure the sensor matching of a process temperature sensor, see Figure 4-4.

Figure 4-4: Calibration - Temperature Calibration Tab

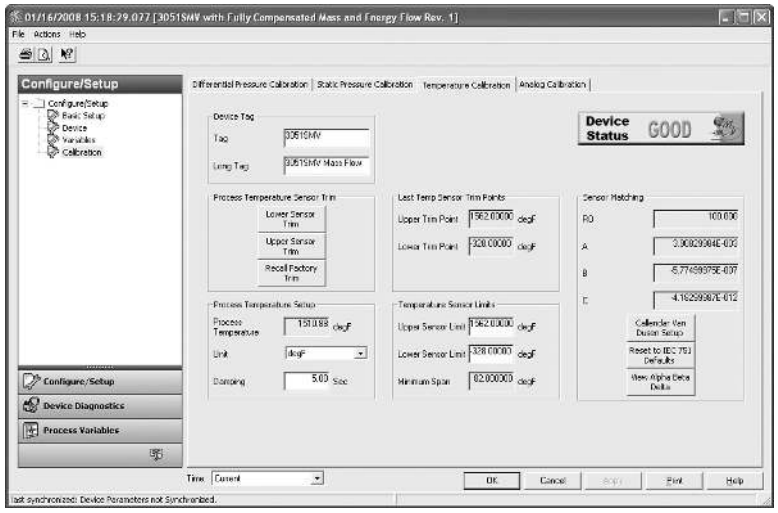

Process temperature upper and lower sensor trim

To calibrate the Process Temperature Input using the sensor trim, follow the procedure shown below:

Procedure

1. Set up a Temperature Calibrator to simulate a Pt 100 (100-ohm platinum, alpha 385 RTD). Wire the two red wires from the Rosemount 3051SMV terminal block to one connection, and the two white wires to the other connection. See Install optional process temperature input (Pt 100 RTD sensor) for more information.
2. Adjust the calibrator/RTD simulator to a test point temperature value that represents a minimum process temperature (for example, 32 °F or 0 °C). Select the

Lower Sensor Trim button under the Process Temperature Sensor Trim heading and follow the on-screen prompts.

3. Adjust the calibrator/RTD simulator to a test point temperature value that represents the maximum process temperature (for example, 140 °F or 60 °C). Select the **Upper Sensor Trim** button under the Process Temperature Sensor Trim heading and follow the on-screen prompts.

Recall factory trim

The Recall Factory Trim button will restore the transmitter to the original factory characterization curve. The Recall Factory Trim button can be useful for recovering from an inadvertent zero trim or inaccurate pressure source.

When the recall factory trim function is used, the transmitter's upper and lower trim values are set to the values configured at the factory. If custom trim values were specified when the transmitter was ordered, the device will recall those values. If custom trim values were not specified, the device will recall the upper and lower sensor limits.

Transmitter RTD sensor matching using Callendar-Van Dusen constants

The Rosemount 3051SMV accepts Callendar-Van Dusen constants from a calibrated RTD schedule and generates a special custom curve to match that specific sensor Resistance vs. Temperature performance. Matching the specific sensor curve with the transmitter configuration enhances the temperature measurement accuracy.

Under the Sensor Matching heading, the Callendar-Van Dusen constants R_0, A, B, and C can be viewed. If the Callendar-Van Dusen constants are known for the user's specific Pt 100 RTD sensor, the constants R_0, A, B, and C may be edited by selecting the Callendar-Van Dusen Setup button and following the on-screen prompts. The user may also view the α, β, and δ Coefficients by selecting the View Alpha, Beta, Delta button. The constants R_0, α, β, and δ may be edited by selecting the Callendar-Van Dusen Setup button and following the on-screen prompts. To reset the transmitter to the IEC 751 Defaults, select the Reset to IEC 751 Defaults button.

4.3.6 Analog calibration

Mass and energy flow Fast Keys	1, 2, 5, 2
Direct process variable output Fast Keys	1, 2, 4, 5

Figure 4-5: Calibration - Analog Calibration Tab

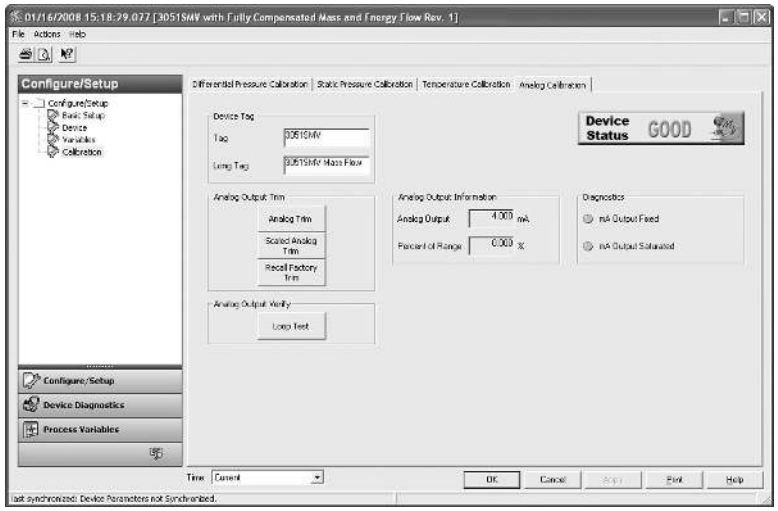

Analog output trim

The Analog Output Trim commands allow the user to adjust the transmitter's current output at the 4 and 20 mA points to match the plant standards. This command adjusts the digital to analog signal conversion, see Figure 4-5.

To perform an analog trim, select the Analog Trim button and follow the on-screen prompts.

Scaled analog output trim

The scaled analog trim command matches the 4 and 20 mA points to a user selectable reference scale other than 4 and 20 mA (for example, 1 to 5 volts if measuring across a 250 ohm load, or 0 to 100 percent if measuring from a Distributed Control System [DCS]). To perform a scaled analog trim, connect an accurate reference meter, select the Scaled Analog Trim button, and follow the on-screen prompts.

Note
Use a precision resistor for optimum accuracy. When adding a resistor to the loop, ensure that the power supply is sufficient to power the transmitter to a 23 mA (maximum high alarm) output with the additional loop resistance.

Analog output loop test

Mass and energy flow Fast Keys	1, 2, 2
Direct process variable output Fast Keys	1, 2, 2

Under the Analog Output Verify heading, a Loop Test can be performed by selecting the **Loop Test** button. The loop test command verifies the output of the transmitter, the integrity of the loop, and the operations of any recorders or similar devices installed in the loop.

Analog output diagnostic alerts

Two diagnostic alerts are shown under the Diagnostics heading.

The first is mA Output Fixed. This alerts the user that the 4–20 mA analog output signal is fixed at a constant value and is not representative of the HART Primary Variable. This diagnostic alert may also be triggered if “Loop Current Mode” is disabled, the device is in alarm, or if “Test Calculation” is running.

The second diagnostic is mA Output Saturated. This alerts the user that the measured Primary Variable has exceeded the range points defined for the 4–20 mA analog output signal. The analog output is fixed at the user-defined high or low saturation point and is not representative of the current HART Primary Variable.

4.4 Transmitter functional tests

Figure 4-6: Transmitter Functional Tests Screen

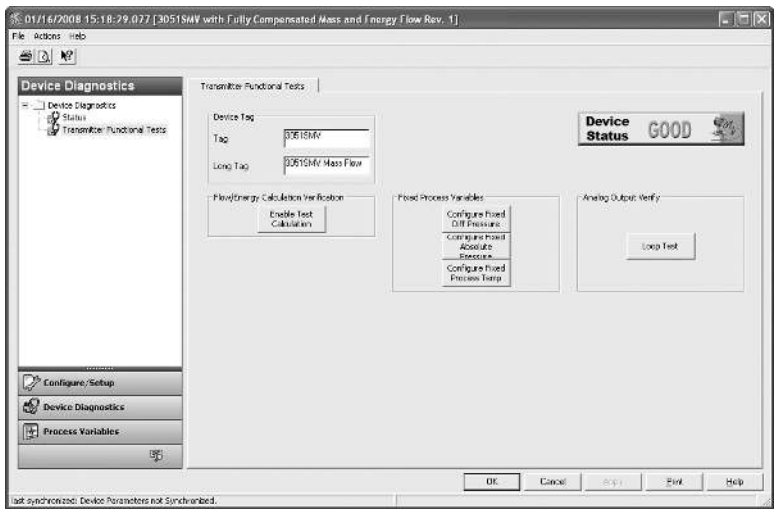

4.4.1 Flow/energy calculation verification (test calculation)

About this task

Mass and energy flow Fast Keys	1, 2, 3

(Fully compensated mass and energy flow feature board only):

The Flow and Energy Calculation Verification Test allows the user to verify the flow configuration of the Rosemount 3051SMV by entering expected values for the differential pressure, static pressure, and process temperature variables. Under the Flow/Energy Calculation Verification heading, perform the following steps:

Procedure

1. Select the Enable Test Calculation button.
2. Select Simulate DP option. Select Next.

3. Select DP Units from the drop-down menu. Select Next.
4. Enter the DP Value corresponding to the desired flow rate simulation. Select Next.
5. Repeat steps Step 1–Step 3 for static pressure (Simulate AP/GP) and process temperature (Simulate PT), if applicable.
6. Select View Results. Select Next. The simulated flow rate and corresponding flow properties will be shown. Select Next.
7. Select Exit. Select Next. Leaving the Enable Test Calculation window automatically returns all process variables fixed by the test calculation method to live process variable measurements.

4.4.2 Configuring fixed process variables

Mass and energy flow Fast Keys	1, 2, 4
Direct process variable output Fast Keys	1, 2, 3

Under the Fixed Process Variables heading, the user may temporarily set the differential pressure, static pressure or process temperature to a user defined fixed value for testing purposes. Once the user leaves the Configure Fixed Variable method, the fixed process variable will be automatically returned to a live process variable measurement.

4.4.3 Analog output loop test

Mass and energy flow Fast Keys	1, 2, 2
Direct process variable output Fast Keys	1, 2, 2

Under the Analog Output Verify heading, a Loop Test can be performed by selecting the **Loop Test** button. The loop test command verifies the output of the transmitter, the integrity of the loop, and the operations of any recorders or similar devices installed in the loop.

4.5 Process variables

4.5.1 Process variable tabs

Mass and energy flow Fast Keys	1, 1
Direct process variable output Fast Keys	1, 1

The Process Variables screen shows a graphical representation of the respective variable. An example of the Primary Variable tab (as shown in Figure 4-7). The chart on these Process Variables tabs will begin plotting when the user first navigates to the screen, and will only continue plotting while the user is viewing this tab. The user may view a larger version of the chart by selecting the Large Chart button.

Each of the four digital output variables has a screen similar to the one shown in Figure 4-7.

Figure 4-7: Process Variables - Primary Variable Tab

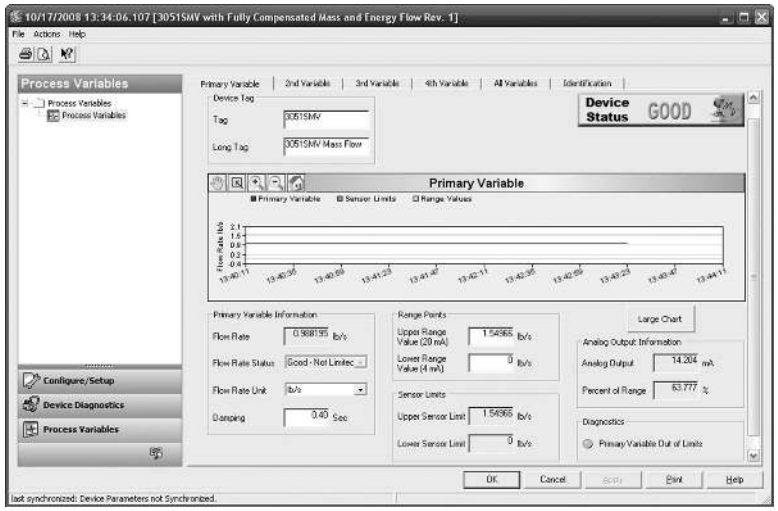

4.5.2 All variables tab

The All Variables tab allows the user to view a complete overview of all variables available within the device.

Figure 4-8: Process Variables - All Variables Tab

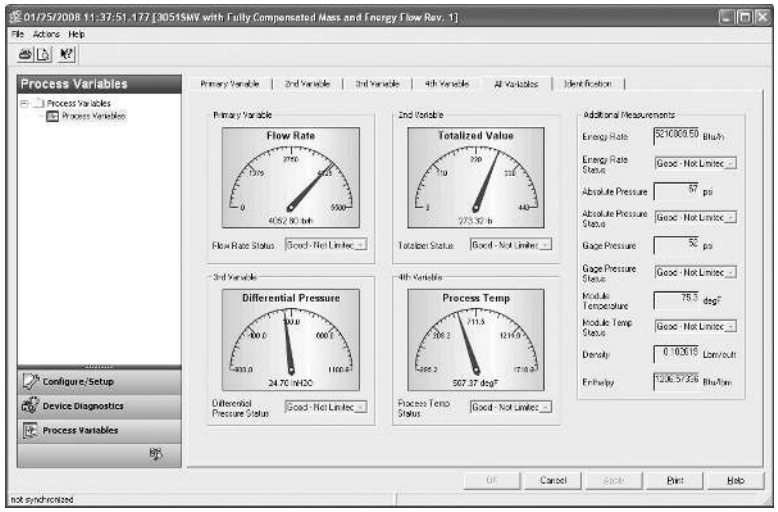

4.6 Field upgrades and replacements

4.6.1 Disassembly considerations

⚠ CAUTION

During disassembly, do not remove the instrument cover in explosive atmospheres when the circuit is live as this may result in serious injury or death. Also, be aware of the following:

- Follow all plant safety rules and procedures.
- Isolate and vent the process from the transmitter before removing the transmitter from service.
- Disconnect optional process temperature sensor leads and cable.
- Remove all other electrical leads and conduit.
- Detach the process flange by removing the four flange bolts and two alignment screws that secure it.
- Do not scratch, puncture, or depress the isolating diaphragms.
- Clean isolating diaphragms with a soft rag and a mild cleaning solution, then rinse with clear water.
- Whenever the process flange or flange adapters are removed, visually inspect the PTFE O-rings. Emerson recommends reusing O-rings if possible. If the O-rings show any signs of damage, such as nicks or cuts, they should be replaced.

4.6.2 Housing assembly including feature board electronics

Field device labels

The SuperModule label reflects the replacement model code for reordering a complete transmitter, including both the SuperModule assembly and Plantweb™ housing. The Rosemount 3051SMV model code stamped on the Plantweb housing nameplate can be used to reorder the Plantweb housing assembly.

Upgrading feature board electronics

The Rosemount 3051SMV allows feature board electronics upgrades. Different feature board electronics assemblies provide new functionality and are easily interchanged for upgrade. When replacing or upgrading the feature board electronics, use the Rosemount 300SMV housing kit which also includes the appropriate Plantweb housing.

Upgrading or replacing the housing assembly including feature board electronics

Remove the feature board

The Rosemount 3051SMV feature board is located opposite the field terminal side in the Plantweb housing. To remove the feature board, perform the following procedure:

Procedure

1. Remove the housing cover opposite the field terminal side.
2. Remove the LCD display, if applicable. To do this, hold in the two clips and pull outward. This will provide better access to the two screws located on the feature board.
3. Loosen the two captive screws located on the feature board.
4. Pull out the feature board to expose and locate the SuperModule connector, see Figure 4-10.
5. Press the locking tabs and pull the SuperModule connector upwards (avoid pulling wires). Housing rotation may be required to access locking tabs. See Housing rotation for more information.

Figure 4-9: SuperModule Connector View

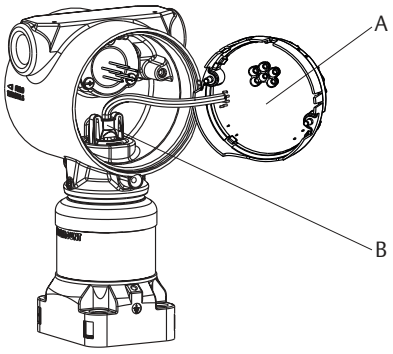

A. Feature board
B. SuperModule connector

Separate the SuperModule assembly from the housing

Procedure

1. To prevent damage to the SuperModule connector, remove the feature board from the SuperModule assembly and remove the connector before separating the SuperModule assembly from the housing.
2. Loosen the housing rotation set screw by one full turn with a -in. hex wrench.
3. Unscrew the housing from the SuperModule threads.

Example

Figure 4-10: SuperModule Connector

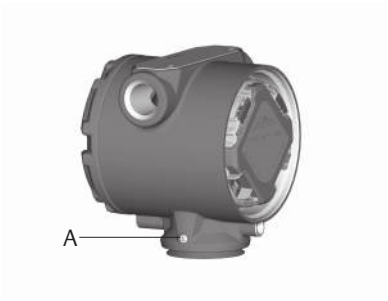

A. 3/32-in. housing rotation set screw

Note
The V-Seal (03151-9061-0001) must be installed at the bottom of the housing.

Figure 4-11: V-Seal

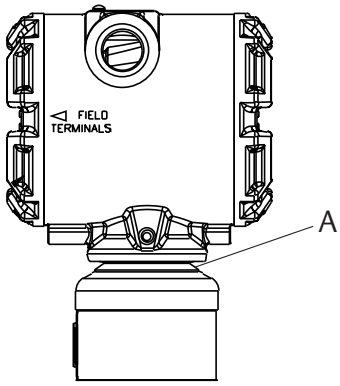

A. Black rubber V-seal

Attach the SuperModule assembly to the Plantweb housing

Procedure

1. Apply a light coat of low temperature silicon grease to the SuperModule threads and O-ring.
2. Thread the housing completely onto the SuperModule assembly. The housing must be no more than one full turn from flush with the SuperModule assembly to comply with flameproof/explosion-proof requirements.
3. Tighten the housing rotation set screw using a -in. hex wrench to a recommended torque of 30 in-lb (3.4 N-m).

Install feature board in the Plantweb housing

Procedure

1. Apply a light coat of low temperature silicon grease to the SuperModule connector O-ring.
2. Insert the SuperModule connector into the top of the SuperModule assembly. Ensure the locking tabs are fully engaged.
3. Gently slide the feature board into the housing, making sure the pins from the Plantweb housing properly engage the receptacles on the feature board.
4. Tighten the captive screws.
5. Attach the Plantweb housing cover and tighten so that metal contacts metal to meet flameproof/explosion-proof requirements.

4.6.3 Terminal block

About this task

Electrical connections are located on the terminal block in the compartment labeled "FIELD TERMINALS." The terminal block may be replaced or upgraded to add transient protection. Part numbers can be found in Service support.

Loosen the two captive screws (see Figure 4-12), and pull the entire terminal block out.

Figure 4-12: Terminal Blocks

Without optional process temperature connections	With optional process temperature connections
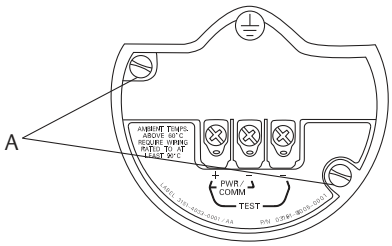	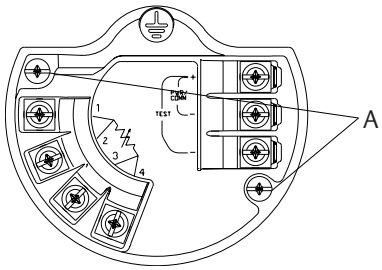

A. Captive screws

Procedure

1. Gently slide the terminal block into the housing, making sure the pins from the Plantweb housing properly engage the receptacles on the terminal block.
2. Tighten the captive screws on the terminal block.
3. Attach the Plantweb housing cover and tighten so that metal contacts metal to meet flameproof/explosion-proof requirements.

4.6.4 LCD display

Transmitters ordered with the LCD display will be shipped with the display installed. Installing the display on an existing Rosemount 3051SMV requires the LCD display kit (part number 03151-9193-0001 for aluminum housing and 03151-9193-0004 for stainless steel (SST) housing).

About this task

Use the following procedure and Figure 4-13 to install the LCD display:

Procedure

1. If the transmitter is installed in a loop, then secure the loop and disconnect power.
2. Remove the transmitter cover on the feature board side (opposite the field terminals side). Do not remove the instrument covers in explosive environments when the circuit is live.
3. Engage the four-pin connector into the feature board and snap the LCD display into place.
4. Install the display cover and tighten to ensure metal to metal contact in order to meet flameproof/explosion-proof requirements.

Figure 4-13: Optional LCD Display

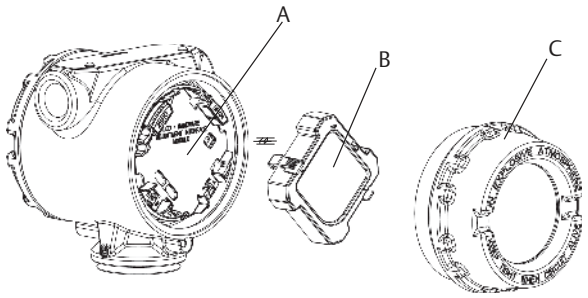

A. Feature board
B. LCD display
C. Display cover

4.6.5 Flange and drain vent

The Rosemount 3051SMV is attached to the process connection flange by four bolts and two alignment cap screws.

Procedure

1. Remove the two alignment cap screws.

Figure 4-14: Alignment Cap Screws

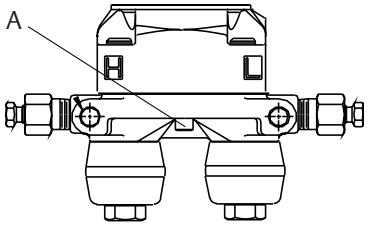

A. Alignment cap screw

2. Remove the four bolts and separate the transmitter from the process connection, but leave the process connection flange in place and ready for re-installation.

Note
If the installation uses a manifold, see Manifold operation.

3. Inspect the SuperModule PTFE O-rings. If the O-rings are undamaged, they may be reused. Emerson recommends reusing O-rings if possible. If the O-rings show any signs of damage, such as nicks or cuts, they should be replaced (part number 03151-9042-0001 for glass-filled PTFE and part number 03151-9042-0002 for graphite-filled PTFE).

Note
If replacing the O-rings, be careful not to scratch or deface the O-ring grooves or the surface of the isolating diaphragm when removing the damaged O-rings.

4. Install the process flange on the SuperModule process connection. To hold the process flange in place, install the two alignment cap screws finger tight (these screws are not pressure retaining). Do not overtighten; this will affect module-to-flange alignment.
5. Install the appropriate flange bolts.
    a) If the installation requires a 1/4–18 NPT connection(s), use four 1.75-in. flange bolts. Finger tighten the bolts. Go to 5.d.
    b) If the installation requires a 1/2–14 NPT connection(s), use flange adapters and four 2.88-in. process flange/adapter bolts.
    c) Hold the flange adapters and adapter O-rings in place while finger-tightening the bolts.
    d) Tighten the bolts to the initial torque value using a crossed pattern. See Table 4-1 for appropriate torque values.
    e) Tighten the bolts to the final torque value using a crossed pattern. See Table 4-1 for appropriate torque values. When fully tightened, the bolts should extend through the top of the module housing.
    f) Torque alignment screws to 30 in-lb (3.4 N-m). If the installation uses a conventional manifold, then install flange adapters on the process end of the manifold using the 1.75-in. flange bolts supplied with the transmitter.

Table 4-1: Bolt Installation Torque Values

Bolt material	Initial torque value	Final torque value
CS-ASTM-A449 Standard	300 in-lb (34 N-m)	650 in-lb (73 N-m)
316 SST—Option L4	150 in-lb (17 N-m)	300 in-lb (34 N-m)
ASTM-A-193-B7M—Option L5	300 in-l (34 N-m)	650 in-lb (73 N-m)
Alloy K-500—Option L6	300 in-lb (34 N-m)	650 in-lb (73 N-m)
ASTM-A-453-660—Option L7	150 in-lb (17 N-m)	300 in-lb (34 N-m)
ASTM-A-193-B8M—Option L8	150 in-lb (17 N-m)	300 in-lb (34 N-m)

6. If the SuperModule PTFE O-rings are replaced, re-torque the flange bolts and alignment cap screws after installation to compensate for seating of the PTFE O-ring.
7. Install the drain/vent valve.
   a) Apply sealing tape to the threads on the seat. Starting at the base of the valve with the threaded end pointing toward the installer, apply two clockwise turns of sealing tape.
   b) Take care to place the opening on the valve so that process fluid will drain toward the ground and away from human contact when the valve is opened.
   c) Tighten the drain/vent valve to 250 in-lb (28.25 N-m).
   d) Tighten the stem to 70 in-lb (8 N-m).

Note
Due to the sensitivity of the Range 1 DP Sensor, extra steps are required to optimize performance. It is necessary to temperature soak the assembly using the following procedure.

a. After replacing O-rings on DP Range 1 transmitters and re-installing the process flange, expose the transmitter to a temperature of 185 °F (85 °C) for two hours.
b. Re-tighten the flange bolts in a cross pattern.
c. Again, expose the transmitter to a temperature of 185 °F (85 °C) for two hours before calibration.

4.6.6 SuperModule assembly

About this task

To reorder an upgrade or replacement SuperModule assembly, use the Rosemount 3051SMV Ordering information but replace the housing option code with ‘00’.

Procedure

1. Remove the housing assembly per Upgrading or replacing the housing assembly including feature board electronics .

2. Remove currently installed SuperModule assembly from process flange per Flange and drain vent.
3. Reassemble replacement or upgraded SuperModule assembly to process flange per Flange and drain vent.
4. Reassemble the housing assembly per Upgrading or replacing the housing assembly including feature board electronics .

5 Troubleshooting

5.1 Overview

This section contains information for troubleshooting the Rosemount™ 3051S MultiVariable™ Transmitter (Rosemount 3051SMV). Diagnostic messages are communicated via the LCD display or a HART® host.

5.2 Device diagnostics

5.2.1 HART host diagnostics

The Rosemount 3051SMV provides numerous diagnostic alerts via a HART host. These alerts can be viewed in Engineering Assistant 6.3 or later, Field Communicator, or AMS Device Manager.

Table 5-1 lists the possible diagnostic alerts that may be shown with the Rosemount 3051SMV. The tables also give a brief description of what each alert indicates and the recommended actions.

Table 5-2 provides summarized maintenance and troubleshooting suggestions for the most common operating problems. If a malfunction is suspected despite the absence of any diagnostic messages on the Field Communicator or host, follow the procedures described here to verify that transmitter hardware and process connections are in good working order.

5.2.2 LCD display diagnostics

In addition to output, the LCD display shows abbreviated operation, error, and warning messages for troubleshooting. Messages appear according to their priority; normal operating messages appear last. To determine the cause of a message, use a HART host to further interrogate the transmitter. A description of each LCD display diagnostic message follows.

Error messages

An error indicator message appears on the LCD display to warn of serious problems affecting the operation of the transmitter. The LCD display shows an error message until the error condition is corrected; ERROR appears at the bottom of the display.

Warning messages

Warning messages appear on the LCD display to alert the user of user-repairable problems with the transmitter, or current transmitter operations. Warning messages appear alternately with other transmitter information until the warning condition is corrected or the transmitter completes the operation that warrants the warning message.

Table 5-1: Diagnostic Message Troubleshooting

LCD display messages	Host diagnostic message	Possible problems	Recommended actions
AP GP LIMIT	Static Pressure Out of Limits	The static pressure is exceeding the sensor limits.	Verify process conditions are within the sensor limits.
BOARD COMM ERROR	Feature Board Communication Error	The feature board electronics are experiencing communication problems. This problem may be temporary and could clear automatically.	Cycle power to the device. If the problem persists, replace the feature board electronics.
CURR SAT	Primary Variable Analog Output Saturated	The primary variable has exceeded the range points defined for the 4–20 mA analog output signal. The analog output is fixed at the high or low saturation point and is not representative of the current process conditions.	Verify the process conditions and modify the analog range values if necessary.
DP LIMIT	Differential Pressure Out of Limits	The Differential Pressure is exceeding the sensor limits.	Verify that the process conditions are within the sensor limits.
FAIL BOARD ERROR	Feature Board Error	The feature board electronics have detected an unrecoverable failure.	Replace the feature board electronics.
FAIL PT ERROR	Process Temperature Sensor Failure	The process temperature sensor has failed or is incorrectly wired.	Check the sensor wiring and fix any shorts or open connections. If the sensor wiring is correct, check the PT sensor and replace if necessary. If the problems persists, replace the feature board electronics.
FAIL SENSOR ERROR	Sensor Module Failure	The SuperModule™ assembly is providing measurements that may no longer be valid.	Verify the sensor module temperature is within the operating limits of the transmitter. Replace SuperModule assembly if necessary.

Table 5-1: Diagnostic Message Troubleshooting *(continued)*

LCD display messages	Host diagnostic message	Possible problems	Recommended actions
FLOW CONFIG	Updating Flow Configuration - Flow Values Constant	A flow configuration is currently being downloaded to the transmitter. During the download, the flow output will be fixed at the last calculated value. Once the download is complete the transmitter will resume live calculations.	No action is required. Wait until the flow configuration download is complete before performing other configuration tasks.
FLOW INCOMP ERROR	Energy Invalid for Flow Configuration	The energy flow variable is not compatible with the current flow configuration but is mapped to the totalizer, a process variable, or a burst variable.	These discrepancies can be fixed with the following actions: Verify configuration for the fluid type supports Energy Flow calculation. Do not specify energy flow for the totalizer, process variables or burst variables unless the transmitter has a compatible flow configuration.
FLOW INCOMP ERROR	Static Pressure Sensor Missing	A static pressure sensor is needed for the current flow configuration.	Download a flow configuration that is compatible with the sensors equipped in the device or replace the module with a model that includes a static pressure sensor.
FLOW INCOMP ERROR	Flow Configuration Download Error	The flow configuration did not successfully download to the transmitter.	Re-download the flow configuration using the Engineering Assistant software.
FLOW LIMIT	Flow Output Out of Limits	The flow output value is exceeding the flow rate operating limits.	Verify the process conditions, and modify the flow configuration parameters and operating ranges as needed.

Table 5-1: Diagnostic Message Troubleshooting *(continued)*

LCD display messages	Host diagnostic message	Possible problems	Recommended actions
FLOW LIMIT	Energy Flow Out of Limits	The energy flow value is exceeding the flow rate operating limits.	Verify the process conditions, and modify the flow configuration parameters and operating ranges as needed.
LCD UPDATE ERROR	LCD Update Error	The LCD display is not receiving updates from the feature board electronics.	Examine the LCD display Connector and reset the LCD display. If the problem persists, first replace the LCD display then replace the feature board electronics if necessary.
(LCD is blank)	LCD Update Error	The LCD display is no longer powered.	Examine the LCD display connector and reset the LCD display. If the problem persists, first replace the LCD display then replace the feature board electronics if necessary.
PT LIMIT	Process Temperature Out of Limits	The process temperature sensor is exceeding the user defined sensor limits.	Verify the process conditions and adjust limits if necessary. Check the process temperature sensor and replace if necessary.
RVRSE FLOW	Reverse Flow Detected	The transmitter is measuring a negative differential pressure.	Verify the process conditions and the transmitter installation.
SNSR COMM ERROR	Module Communication Failure	Communication between the sensor module and the feature board electronics have been lost.	Verify the connection between the sensor module and the feature board electronics. Replace the SuperModule assembly and/or feature board electronics if necessary.

Table 5-1: Diagnostic Message Troubleshooting *(continued)*

LCD display messages	Host diagnostic message	Possible problems	Recommended actions
SNSR INCOMP ERROR	Sensor Module Incompatibility	The SuperModule assembly is not compatible with the feature board electronics. The SuperModule assembly is not equipped with a differential pressure sensor or it is an older revision of the sensor module.	Replace the SuperModule assembly with one that is compatible with the Rosemount 3051SMV Plantweb™ Housing.
SNSR MISSING ERROR	Sensor Missing	The sensor mapped to the primary variable is not present.	Remap the primary variable to a sensor that is present.
SNSRT LIMIT	Sensor Temperature Out of Limits	The Sensor Module Temperature is exceeding the sensor limits.	Verify ambient conditions are within the sensor limits.
XMTR Info	Non-Volatile Memory Warning	Transmitter information data is incomplete. Transmitter operation will not be affected.	Replace the feature board electronics at next maintenance shutdown.
XMTR Info Error	Non-Volatile Memory Error	Non-volatile data of the device is corrupted.	Replace the feature board electronics.
(Other message) (1)	Maintenance Required	The transmitter may not be operating properly and requires attention.	Check other warning messages.
(Other message) (1)	mA Output Fixed	The 4–20 mA analog output signal is fixed at a constant value and is not representative of the HART primary variable.	Disable loop current mode.
(Other message) (1)	Primary variable out of limits	The primary variable is outside the range of the transmitter.	View other diagnostic messages to determine which variable is out of limits.
(Other message) (1)	Non-primary variable out of limits	A variable other than the primary variable is outside the range of the transmitter.	View other diagnostic messages to determine which variable is out of limits.

Table 5-1: Diagnostic Message Troubleshooting *(continued)*

LCD display messages	Host diagnostic message	Possible problems	Recommended actions
(LCD is reading normally)	Configuration changed	A modification has been made to the device configuration using a host other than AMS Device Manager.	No action is required; message will clear after a change is made using AMS.
(LCD is reading normally)	Cold start	Transmitter was restarted.	No action is required; message will clear automatically.

(1) LCD display messages will vary as it is specific to the possible problem.

Table 5-2: Transmitter Troubleshooting

Symptom	Corrective actions
Transmitter milliamp output is zero	Verify power is applied to signal terminals.
	Check power wires for reversed polarity.
	Verify terminal voltage is 12 to 42.4 Vdc.
	Check for open diode across test terminal on Rosemount 3051SMV terminal block.
Transmitter not communicating with Field Communicator, AMS Device Manager, or Engineering Assistant	Verify the output is between 4 and 20 mA or saturation levels.
	Verify clean DC Power to transmitter (Max AC noise 0.2 volts peak to peak).
	Check loop resistance, 250–1321 Ω. Loop Resistance = (Power supply voltage - transmitter voltage)/loop current
	Check if unit is at an alternate HART address.
Transmitter milliamp output is low or high	Verify applied process variables.
	Verify 4 and 20 mA range points and flow configuration.
	Verify output is not in alarm or saturation condition.
	An analog output trim or sensor trim may be required.
Transmitter will not respond to changes in measured process variables	Check to ensure that the equalization valve is closed.
	Check test equipment.
	Check impulse piping or manifold for blockage.
	Verify primary variable measurement is between the 4 and 20 mA set points.
	Verify output is not in alarm or saturation condition.
	Verify transmitter is not in Loop Test, Multidrop, Test Calculation, or Fixed Variable mode.

Table 5-2: Transmitter Troubleshooting *(continued)*

Symptom	Corrective actions
Digital Variable output is low or high	Check test equipment (verify accuracy).
	Check impulse piping for blockage or low fill in wet leg.
	Verify transmitter sensor trim.
	Verify measured variables are within transmitter limits.
Digital Variable output is erratic	Check application for faulty equipment in process line.
	Verify transmitter is not reacting directly to equipment turning on/off.
	Verify damping is set properly for application.
Milliamp output is erratic	Verify power source to transmitter has adequate voltage and current.
	Check for external electrical interference.
	Verify transmitter is properly grounded.
	Verify shield for twisted pair is only grounded at one end.
Transmitter output is normal, but LCD display is off and diagnostics indicate an LCD display problem	Verify LCD display is installed correctly. Replace LCD display.
Transmitter indicating a flow value and/or DP value during no flow condition	Zero DP sensor Verify DP Low Flow Cutoff setting.

5.3 Measurement quality and limit status

The Rosemount 3051SMV is compliant with the HART Revision 6 Standard. One of the most noticeable enhancements available with the HART 6 standard is that each variable has a measurement quality and limit status. These statuses can be viewed in AMS Device Manager, on a Field Communicator, or with any HART 6 compatible host system. In AMS Device Manager, variable statuses can be viewed by selecting Variables in the upper left menu tree under the Configure/Setup heading.

Figure 5-1: Quality and Limit Status

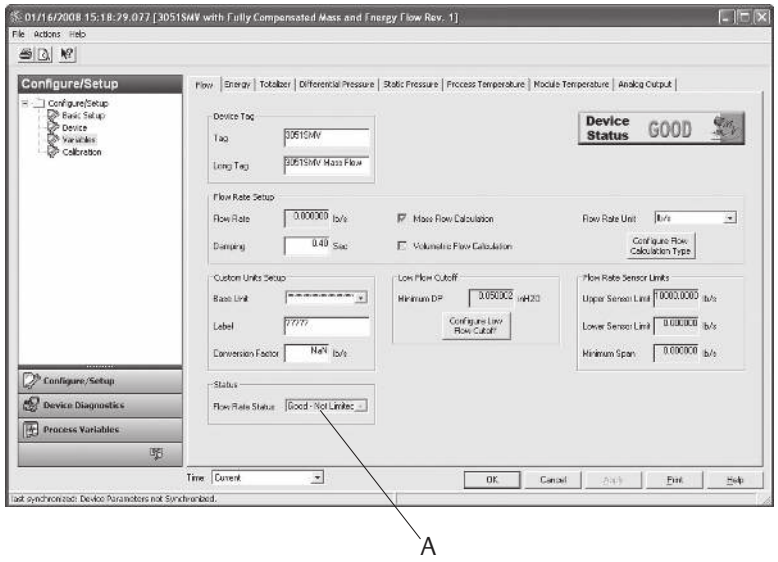

A. Measurement quality and limit status

Each variable status reading consists of two parts separated by a hyphen; Measurement Quality and Limit Status.

5.3.1 Possible measurement quality readings

Good – Displayed during normal device operation.

Poor Accuracy – Indicates the accuracy of the variable measurement has been compromised. Example: The module temperature sensor failed and is no longer compensating the differential pressure and status pressure measurements.

Bad – Indicates the variable has failed. Example: A differential pressure, static pressure, or process temperature sensor failure.

5.3.2 Possible limit status readings

Not Limited – Displayed during normal device operation.

High Limited – Indicates the current variable reading has gone above the transmitter's maximum possible reading and is no longer representative of the actual variable measurement.

Low Limited – Indicates the current variable reading has gone below the transmitter's minimum possible reading and is no longer representative of the actual variable measurement.

Constant – Indicates the variable reading is set to a fixed value. Example: The totalizer has been stopped.

5.4 Engineering Assistant communication troubleshooting

Table 5-3 identifies the most common communication issues between the Engineering Assistant software and the Rosemount 3051SMV.

Table 5-3: Corrective Action for Engineering Assistant Communication Problems

Symptom	Corrective action
No Communication between the Engineering Assistant software and the Rosemount 3051SMV	Loop wiring (HART)
	• HART protocol communication requires a loop resistance value between 250 to 1321 ohms, inclusive. • Check for adequate voltage to the transmitter. See Load limitations. • Check for intermittent shorts, open circuits, and multiple grounds. • Check for capacitance across the load resistor. Capacitance should be less than 0.1 microfarad.
	Engineering Assistant
	• Verify correct COM port selected. • Verify laptop computer is not in low energy mode (certain laptops disable all COM ports in low energy mode). • Check if HART modem is properly connected. • Check if HART driver is loaded and installed. If using a HART USB port modem, install drivers from CD-ROM provided with USB modem. • Check if another HART configuration program, such as AMS Device Manager, is currently open. Only one HART configuration program may be opened at a time. • Verify the COM port buffer setting is set to the lowest setting (1) in the advanced COM port settings and re-boot the computer. • Set the Device Address to search All.

5.5 Measurement troubleshooting

The transmitter provides a means to display the current process variables and flow calculations. If the process variable reading is unexpected, this section provides the symptoms and possible corrective actions.

Table 5-4: Unexpected Process Variable (PV) Readings

Symptom	Corrective action
High PV Reading	Primary element
	• Check for restrictions at the primary element. • Check the installation and condition of the primary element. • Note any changes in process fluid properties that may affect output.
	Impulse piping

Table 5-4: Unexpected Process Variable (PV) Readings *(continued)*

Symptom	Corrective action
	• Check to ensure the pressure connection is correct. • Check for leaks or blockage. • Check to ensure that blocking valves are fully open. • Check for entrapped gas in liquid lines or for liquid in gas lines. • Check to ensure the density of fluid in impulse lines is unchanged. • Check for sediment in the transmitter process flange. • Make sure that process fluid has not frozen within the process flange.
	Power supply • Check the output voltage of the power supply at the transmitter. It should be 12 to 42.4 V dc for HART with no load at the transmitter terminals. **Note** Do not use higher than the specified voltage to check the loop, or damage to the transmitter may result.
	Feature board electronics • Connect a personal computer and use AMS Device Manager, Engineering Assistant Software, or the Field Communicator to check the sensor limits to ensure calibration adjustments are within the sensor range and that calibration is correct for the pressure being applied. • Confirm the electronics housing is properly sealed against moisture. • If the feature board electronics are still not functioning properly, substitute new feature board electronics.
	Flow configuration (fully compensated mass and energy flow feature board only) • Verify flow configuration is correct for current application
	Process temperature RTD input
	• Verify all wire terminations • Verify sensor is a Pt 100 RTD • Replace Pt 100 sensor
	Sensor module • The sensor module is not field repairable and must be replaced if found to be defective. Check for obvious defects, such as a punctured isolating diaphragm or fill fluid loss, and contact your nearest Emerson™ Service Center.
Erratic PV Reading	Primary element
	• Check the installation and condition of the primary element.
	Loop wiring
	• Check for adequate voltage to the transmitter. It should be 12 to 42.4 Vdc for HART with no load at the transmitter terminals. • Check for intermittent shorts, open circuits, and multiple grounds.
	Process pulsation

Table 5-4: Unexpected Process Variable (PV) Readings *(continued)*

Symptom	Corrective action
	• Adjust the damping.
	Feature board electronics
	• Connect a personal computer and use AMS Device Manager, Engineering Assistant Software, or the Field Communicator to check the sensor limits to ensure calibration adjustments are within the sensor range and that calibration is correct for the pressure being applied. • Confirm the electronics housing is properly sealed against moisture. • If the feature board electronics are still not functioning properly, substitute new feature board electronics.
	Impulse piping
	• Check for entrapped gas in liquid lines or for liquid in gas lines. • Make sure that process fluid has not frozen within the process flange. • Ensure that block valves are fully open and equalize valves are fully and tightly closed.
	Sensor module
	• The sensor module is not field repairable and must be replaced if found to be defective. Check for obvious defects, such as a punctured isolating diaphragm or fill fluid loss, and contact your nearest Emerson Service Center.
Low PV Reading or No PV Reading	Primary element
	• Check the installation and condition of the primary element. Note any changes in process fluid properties that may affect output.
	Loop wiring
	• Check for adequate voltage to the transmitter. It should be 12 to 42.4 Vdc for HART with no load at the transmitter terminals. • Check the milliamp rating of the power supply against the total current being drawn for all transmitters being powered. • Check for shorts and multiple grounds. • Check for proper polarity at the signal terminal. • Check loop impedance. • Check the wire insulation to detect possible shorts to ground.
	Impulse piping
	• Check to ensure the pressure connection is correct. • Check for leaks or blockage. • Check to ensure blocking valves are fully open and that bypass valves are tightly closed. • Check for entrapped gas in liquid lines or for liquid in gas lines. • Check for sediment in the transmitter process flange. • Make sure process fluid has not frozen within the process flange.
Symptom	Corrective action

Table 5-4: Unexpected Process Variable (PV) Readings *(continued)*

Symptom	Corrective action
Low PV Reading or No PV Reading	Feature board electronics
	• Check the sensor limits to ensure calibration adjustments are within the sensor range and that calibration is correct for the pressure being applied. • Confirm the electronics housing is properly sealed against moisture. • If the feature board electronics are still not functioning properly, substitute new feature board electronics.
	Flow configuration (fully compensated mass and energy flow feature board only)
	• Verify flow configuration is correct for current application.
	Process temperature RTD input
	• Verify all wire terminations • Verify sensor is a Pt 100 RTD • Replace Pt 100 sensor
	Sensor module
	• The sensor module is not field repairable and must be replaced if found to be defective. Check for obvious defects, such as a punctured isolating diaphragm or fill fluid loss, and contact your nearest Emerson Service Center.
Sluggish Output Response/Drift	Primary element
	• Check for restrictions at the primary element.
	Impulse piping
	• Check for leaks or blockage. • Ensure blocking valves are fully open. • Check for sediment in the transmitter process flange. • Check for entrapped gas in liquid lines and for liquid in gas lines. • Ensure the density of fluid in impulse lines is unchanged. • Make sure process fluid has not frozen within the process flange.
	Feature board electronics
	• Confirm damping is correctly set. • Confirm the electronics housing is properly sealed against moisture.
	Sensor module
	• The sensor module is not field repairable and must be replaced if found to be defective. Check for obvious defects, such as a punctured isolating diaphragm or fill fluid loss, and contact your nearest Emerson Process Management Service Center. • Confirm the electronics housing is properly sealed against moisture.

The following performance limitations may inhibit efficient or safe operation. Critical applications should have appropriate diagnostic and backup systems in place. Pressure

transmitters contain an internal fill fluid. It is used to transmit the process pressure through the isolating diaphragms to the pressure sensor module. In rare cases, oil loss paths in oil-filled pressure transmitters can be created. Possible causes include: physical damage to the isolator diaphragms, process fluid freezing, isolator corrosion due to an incompatible process fluid, etc. A transmitter with oil fill fluid loss may continue to perform normally for a period of time. Sustained oil loss will eventually cause one or more of the operating parameters to exceed published specifications as the operating point output continues to drift. Symptoms of advanced oil loss and other unrelated problems include:

- Sustained drift rate in true zero and span or operating point output or both
- Sluggish response to increasing or decreasing pressure or both
- Limited output rate or very nonlinear output or both
- Change in output process noise
- Noticeable drift in operating point output
- Abrupt increase in drift rate of true zero or span or both
- Unstable output
- Output saturated high or low

5.6 Service support

To expedite the return process outside of the United States, contact the nearest Emerson representative.

Within the United States, call the Emerson Instrument and Valves Response Center using the 1-800-654-RSMT (7768) toll-free number. This center, available 24 hours a day, will assist with any needed information or materials.

The center will ask for product model and serial numbers, and will provide a Return Material Authorization (RMA) number. The center will also ask for the process material to which the product was last exposed.

⚠ CAUTION

Individuals who handle products exposed to a hazardous substance can avoid injury if they are informed of and understand the hazard. If the product being returned was exposed to a hazardous substance as defined by OSHA, a copy of the required Material Safety Data Sheet (MSDS) for each hazardous substance identified must be included with the returned goods.

Emerson Instrument and Valves Response Center representatives will explain the additional information and procedures necessary to return goods exposed to hazardous substances.

6 Safety Instrumented Systems Requirements

6.1 Safety Instrumented Systems (SIS) Certification

The safety-critical output of the Rosemount 3051SMV is provided through a two-wire, 4–20 mA signal representing pressure. The Rosemount 3051SMV safety certified pressure transmitter is certified to: Low Demand; Type B.

SIL 2 for random integrity @ HFT=0

SIL 3 for random integrity @ HFT=1

SIL 3 for systematic integrity

The Rosemount 3051SMV must be installed per manufacturer's instructions, specifications and the materials must be compatible with process conditions.

The HART® Protocol is only used for setup, calibration, and diagnostic purposes and is not for safety critical operation.

6.2 Rosemount 3051SMV safety certified identification

All Rosemount 3051SMV Transmitters must be identified as safety certified before installing into SIS systems.

About this task

To identify a safety certified Rosemount 3051SMV:

Procedure

1. Verify the model string contains Rosemount 3051SMV and QT.
   - If the transmitter was ordered as part of a flowmeter, verify the model string reads Rosemount 3051SFx(1–7) and QT.
2. Verify software revision is 3.

6.3 Installation in SIS applications

Installations are to be performed by qualified personnel. No special installation is required in addition to the standard installation practices outlined in this document. Always ensure a proper seal by installing the electronics housing cover(s) so that metal contacts metal.

Environmental and operational limits are available in Specifications and Reference Data.

The loop should be designed so the terminal voltage does not drop below 12.0 Vdc when the transmitter output is set to 23 mA. For more information, see the Rosemount 3051SMV Product Data Sheet.

Position the security switch to the ( ) position to prevent accidental or deliberate change of configuration data during normal operation.

6.4 Configuring in SIS applications

Use any HART capable configuration tool to communicate with and verify configuration of the Rosemount 3051SMV.

Note
Transmitter output is not safety-rated during the following: configuration changes, multidrop, and loop test. Alternative means should be used to ensure process safety during transmitter configuration and maintenance activities.

6.4.1 Damping

User-selected damping will affect the transmitters ability to respond to changes in the applied process. The damping value + response time must not exceed the loop requirements.

Reference Damping to change damping value.

6.4.2 Alarm and saturation levels

DCS or safety logic solver should be configured to match transmitter configuration. Figure 6-1 identifies the three alarm levels available and their operation values.

Figure 6-1: Alarm Levels

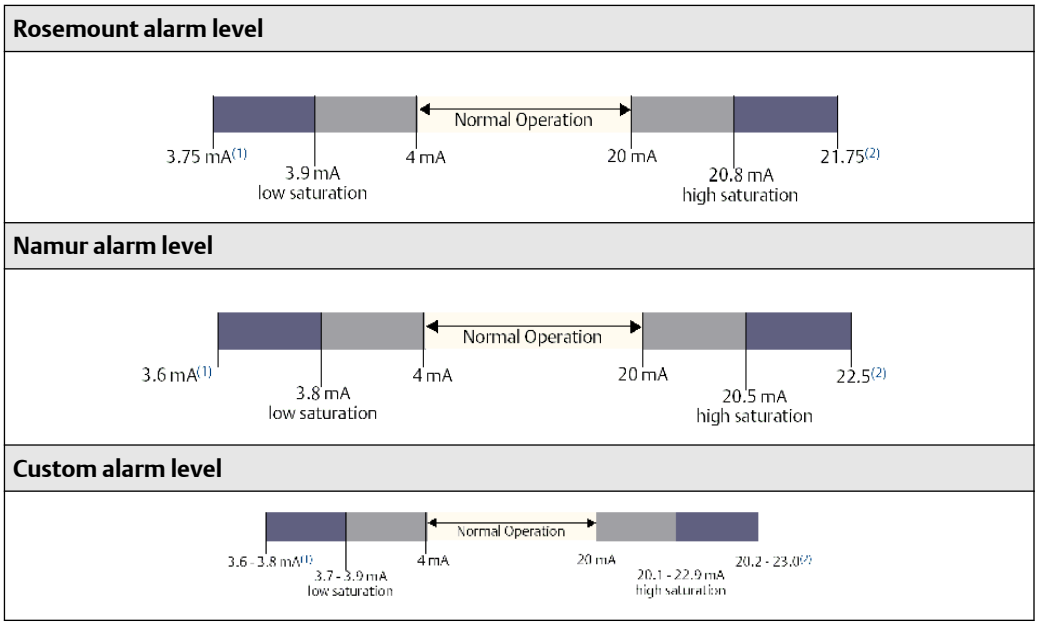

1. Transmitter Failure, hardware or software alarm in LO position.
2. Transmitter Failure, hardware or software alarm in HI position.

6.5 Rosemount 3051SMV SIS operation and maintenance

6.5.1 Proof test

The following proof tests are recommended. All proof test procedures must be carried out by qualified personnel.

Use Field Communicator Fast Keys to perform a loop test, analog output trim, or sensor trim. security switch should be in the ( ) position during proof test execution and repositioned in the ( ) position after execution.

6.5.2 Partial proof test

The partial suggested proof test consists of a power cycle plus reasonability checks of the transmitter output. This test will detect ~48% of possible DU failures in the device.

About this task

FMEDA report can be found at Emerson.com/Automation-Solutions/Pressure/Rosemount-3051SMV and look at the certificates and approvals documentation.

Required tools: Field Communicator and mA meter.

Procedure

1. Bypass the safety function and take appropriate action to avoid a false trip.
2. Use HART communications to retrieve any diagnostics and take appropriate action.
3. Send a HART command to the transmitter to go to the high alarm current output and verify that the analog current reaches that value. See Alarm level verification.

   Note
   This tests for compliance voltage problems such as a low loop power supply voltage or increased wiring resistance. This also tests for other possible failures.

4. Send a HART command to the transmitter to go to the low alarm current output and verify that the analog current reaches that value.

   Note
   This tests for possible quiescent current related failures.

5. Perform a “reasonability check” on the pressure sensor reading and the sensor temperature reading and if applicable the process temperature reading.

Note
This tests for faults in the input multiplexer and A to D converter.

6. Remove the bypass and otherwise restore the normal operation.
7. Place the Security switch in the ( ) position.

6.5.3 Comprehensive proof test

The comprehensive proof test consists of performing the same steps as the simple suggested proof test but with a two-point calibration of the pressure and temperature sensors in place of the reasonability check of the sensors. This test will detect ~90% of possible DU failures in the device.

About this task

Required tools: Field Communicator and pressure calibration equipment.

Procedure

1. Bypass the safety function and take appropriate action to avoid a false trip.
2. Use HART communications to retrieve any diagnostics and take appropriate action.
3. Send a HART command to the transmitter to go to the high alarm current output and verify that the analog current reaches that value. See Alarm level verification.

   Note
   This tests for compliance voltage problems such as a low loop power supply voltage or increased wiring resistance. This also tests for other possible failures.

4. Send a HART command to the transmitter to go to the low alarm current output and verify that the analog current reaches that value.

   Note
   This tests for possible quiescent current related failures.

5. Perform a two-point verification of the transmitter pressure over the full working range (and process temperature where applicable).

   Note
   If the two-point process temperature verification is performed with electrical instrumentation, this proof test will not detect any failures of the sensor.

6. Remove the bypass and otherwise restore the normal operation.
7. Place the Security switch in the ( ) position.

Example

Note

- The user determines the proof test requirements for impulse piping.
- Automatic diagnostics are defined for the corrected % DU: The tests performed internally by the device during runtime without requiring enabling or programming by the user.

6.6 Inspection

6.6.1 Visual inspection

Not required

6.6.2 Special tools

Not required

6.6.3 Product repair

The Rosemount 3051SMV is repairable with limited replacement options.

All failures detected by the transmitter diagnostics or by the proof-test must be reported. Feedback can be submitted electronically at Emerson.com/Rosemount/Report-A-Failure.

All product repair and part replacement should be performed by qualified personnel.

6.6.4 Rosemount 3051SMV SIS reference

The Rosemount 3051SMV must be operated in accordance to the functional and performance specifications provided in Specifications and Reference Data.

6.6.5 Failure rate data

The FMEDA report includes failure rates and the assumptions for how these failure rates were derived.

The report is available under Certificates and Approvals at Emerson.com/Automation-Solutions/Pressure/Rosemount-3051SMV.

6.6.6 Failure values

Safety Deviation (defines what is dangerous in a FMEDA): ±2.0% of analog output span
Transmitter response time: provided in Dynamic performance ambient temperature effect. Self-diagnostics Test Interval: At least once every 60 minutes

6.6.7 Product life

50 years - based on worst case component wear-out mechanisms - not based on wear-out of process wetted materials

A Appendix A

A.1 Product Certifications

About this task

To view current Product Certifications, follow these steps:

Procedure

1. Go to Emerson.com/Rosemount/3051SMV.
2. Scroll as needed to the green menu bar and click Documents & Drawings.
3. Click Manuals & Guides.
4. Select the appropriate Quick Start Guide.

A.2 Ordering Information, Specifications, and Dimensional Drawings

To view current Rosemount 3051SMV Ordering Information, Specifications, and Dimensional Drawings, follow these steps:

Procedure

1. Go to Emerson.com/Rosemount/3051SMV.
2. Scroll as needed to the green menu bar and click **Documents & Drawings**.
3. Click **Data Sheets & Bulletins**.
4. Select the appropriate Product Data Sheet.

00809-0100-4803
Rev. GB
2018

Global Headquarters
Emerson Automation Solutions
6021 Innovation Blvd.
Shakopee, MN 55379, USA
+1 800 999 9307 or +1 952 906 8888
+1 952 949 7001
RFQ.RMD-RCC@Emerson.com

North America Regional Office
Emerson Automation Solutions
8200 Market Blvd.
Chanhassen, MN 55317, USA
+1 800 999 9307 or +1 952 906 8888
+1 952 949 7001
RMT-NA.RCCRF@Emerson.com

Latin America Regional Office
Emerson Automation Solutions
1300 Concord Terrace, Suite 400
Sunrise, FL 33323, USA
+1 954 846 5030
+1 954 846 5121
RFQ.RMD-RCC@Emerson.com

Europe Regional Office
Emerson Automation Solutions Europe
GmbH
Neuhofstrasse 19a P.O. Box 1046
CH 6340 Baar
Switzerland
+41 (0) 41 768 6111
+41 (0) 41 768 6300
RFQ.RMD-RCC@Emerson.com

Asia Pacific Regional Office
Emerson Automation Solutions
1 Pandan Crescent
Singapore 128461
+65 6777 8211
+65 6777 0947
Enquiries@AP.Emerson.com

Middle East and Africa Regional Office
Emerson Automation Solutions
Emerson FZE P.O. Box 17033
Jebel Ali Free Zone - South 2
Dubai, United Arab Emirates
+971 4 8118100
+971 4 8865465
RFQ.RMTMEA@Emerson.com

Linkedin.com/company/Emerson-Automation-Solutions
Twitter.com/Rosemount_News
Facebook.com/Rosemount
Youtube.com/user/RosemountMeasurement
Google.com/+RosemountMeasurement

©2018 Emerson. All rights reserved.

Emerson Terms and Conditions of Sale are available upon request. The Emerson logo is a trademark and service mark of Emerson Electric Co. Rosemount is mark of one of the Emerson family of companies. All other marks are the property of their respective owners.

EMERSON™