Product Data Sheet
00813-0100-4044, Rev AC
May 2023

Liquid Analysis Sensor Mounting, Wiring, and Calibration Accessories



Emerson offers a wide selection of accessories to enable convenient installation and calibration of its liquid analysis instrumentation. This data sheet includes a variety adapters for mounting pH, ORP, conductivity, chlorine, ozone, and dissolved oxygen sensors. Also included are junction boxes and extension cables for applications requiring long distance wiring, as well as calibration buffer and standard solutions for pH, ORP, and conductivity sensors.

Accessory compatibility

The compatibility for each mounting accessory is limited to the sensor models stated in the corresponding data tables.

Contents

Accessory compatibility 2
Insertion mounting adapters for NPT threaded sensors 3
Insertion mounting adapters for 1-in. diameter retractable sensors 6
Tri Clamp mounting adapters 8
In-line tee mounting adapters 10
Standard retraction assemblies 12
High pressure retraction assemblies 15
Low flow cells 19
Low flow panel 21
Rotameters for sample flow control 23
Submersion mounting adapters 24
Handrail mounting systems 24
Jet spray cleaner 25
Junction boxes and preamplifiers 27
Extension cable for long distance sensor wiring 30
Calibration buffers and standard solutions 31
Conductivity validation unit 32

Insertion mounting adapters for NPT threaded sensors

Use these adapters to install sensors with rear-facing threads into process piping or sample tees. The sensor screws into a plastic adapter held in the process connector by a union nut. The rear of the adapter is threaded for a conduit connection, if required. The union connection allows the sensor to be removed without the danger of twisting and damaging the cable.

Table 1: Ordering information and specifications

Part number	**23242-02**	**23242-03**	**2001990**
Reference image			
Process connection	1½-in. MNPT		2-in. MNPT
Sensor connection	Connects to 1- or ¾-in. MNPT rear-facing threads on sensor	Connects to ¾-in. MNPT or ⅝-in.-11 UNC rear-facing threads on sensor	Connects to ¾-in. MNPT rear-facing threads on sensor
Materials of construction	316 SST, PEEK, FKM		CPVC, PEEK, FKM
Maximum temperature	392 °F (200 °C)		100 °F (38 °C) at 100 psig (791 kPa abs) OR 185 °F (85 °C) at 45 psig (412 kPa abs)
Maximum pressure	295 psig (2135 kPa abs)		
Sensor type	**Compatible sensor models[(1)]**		
pH/ORP	Rosemount 3900, 389, 396P, and 3500	N/A	N/A
Conductivity	Rosemount 228-21	Rosemount 228-20	Rosemount 228-21

(1) *Sensor models shown are for integral cable connections. Corresponding Variopol (VP) connection sensors can also be used.*

Figure 1: Insertion Adapter 23242-02 with Rosemount 228 Toroidal Conductivity Sensor (-21 option)

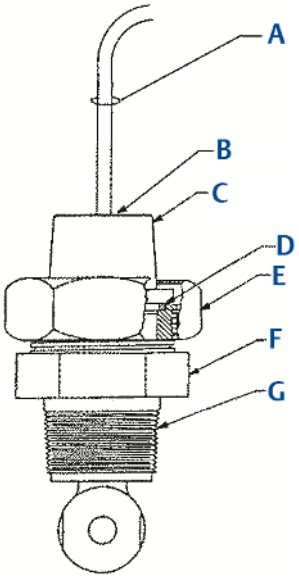

A. Cable
B. 1-in. FNPT
C. Adapter ¾-in. FNPT thread
D. 2-135 FKM O-ring
E. Nut, hex union 2-inch
F. Neck, union fitting
G. 1½-in. MNPT

Figure 2: Insertion Adapter 23242-03 with Rosemount 228 Toroidal Conductivity Sensor (-20 option)

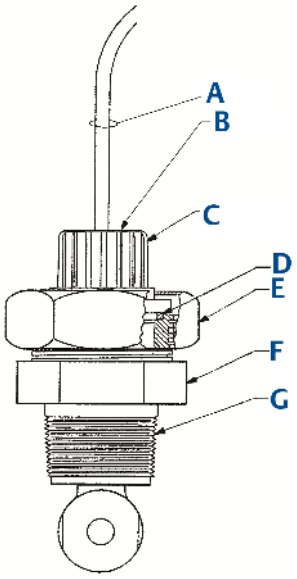

A. Cable
B. ¾-in. FNPT
C. Adapter ⅝-in.-11 UNC-2B x ¾-in. NPT
D. 2-135 FKM O-ring
E. Nut, hex union 2-inch
F. Neck, union fitting
G. 1½-in. MNPT

Figure 3: Insertion Adapter 2001990 with Rosemount 228 Toroidal Conductivity Sensor (-21 option)

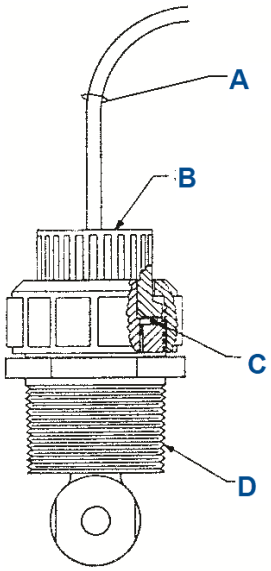

A. Cable
B. ¾-in. FNPT
C. 1-132 FKM O-ring
D. 2-in. MNPT

Insertion mounting adapters for 1-in. diameter retractable sensors

Certain pH and ORP sensor models lack threads and must be installed in the process piping using one of the mounting adapters shown below in Table 2. The sensor slides into the fitting, and a nut and ferrule tightened against the sensor tube holds the sensor in place. The insertion depth is adjustable, and the threads can be switched to face up or down for insertion installations or connection to a submersion pipe. A collar on the tube prevents the sensor from being ejected by the process pressure if the nut is not sufficiently tightened. To prevent the sensor from turning and twisting the cable while a threaded fitting is being installed or removed, loosen the nut to free the sensor.

Table 2: Ordering information and specifications

Part number	**23166-00**	**23166-01**	**9510066**
Reference image			
Process connection	1-in. MNPT		
Sensor connection	Connects to 1-in. outer diameter tube on retractable style sensor		
Material	316 SST	Titanium	Nylon
O-ring material	EPDM		FKM
Sensor type	**Compatible sensor models(1)**		
pH/ORP	Rosemount 385+, 396, 398, 396R, 398R, 3300HT, 3400HT, and RBI-547		Rosemount 396, 398, and 3300HT

(1) *Sensor models shown are for integral cable connections. Corresponding Variopol (VP) connection sensors can also be used.*

Figure 4: Insertion Adapter (PN 23166-00 or 23166-01) with Rosemount 396 pH Sensor

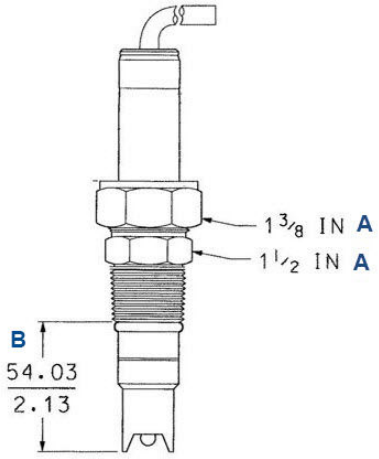

A. Hex
B. pH electrode

Note
Dimensions are in millimeters/inches.

Figure 5: Insertion Adapter (PN 9510066) with Rosemount 396 Sensor

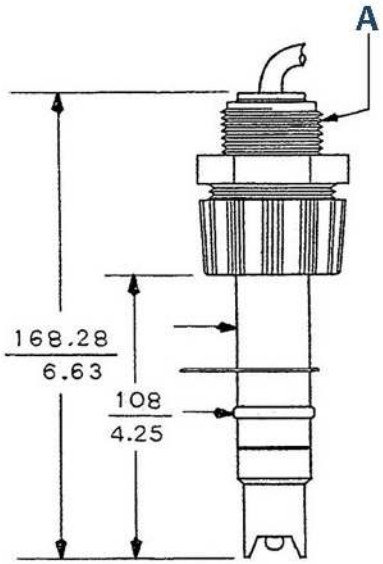

A. 1 in (25 mm) x 1 in (25 mm) NPT male connector, nylon (PN 9510066)

Note
Dimensions are in millimeters/inches.

Tri Clamp mounting adapters

Use these adapters to install threaded or retractable style sensors into 1½- or 2-in. Tri Clamp process connections.

Table 3: Ordering information and specifications

Part number	**SQ13662 (S11099-LQD)**	**SQP-10098-LQD(1)**	**SQ 10904A and B**
Reference image			
Process connection	1½-in. Tri Clamp	2-in. Tri Clamp	2-in. (A) or 1½-in. (B) Tri Clamp
Sensor connection	Connects to PG13.5 threads on sensor	Connects to 1-in. diameter tube on retractable style sensor	Connects to 1-in. MNPT threads on sensor
Materials of construction	316 SST, 16 Ra finish	316 SST	304 SST
Sensor type	**Compatible sensor models(1)**		
pH/ORP	Rosemount Hx338+	Rosemount 385+, 396, 396R, 398R, TF396, 398, 3300HT, and 3400HT	Rosemount 389, 396P, 3500, and 3900
Dissolved oxygen	Rosemount Hx438	N/A	N/A

(1) *Sensor models shown are for integral cable connections. Corresponding Variopol (VP) connection sensors can also be used.*

Figure 6: Tri Clamp Mounting Adapter (PN SQP-10098-LQD) with Rosemount TF396 pH Sensor

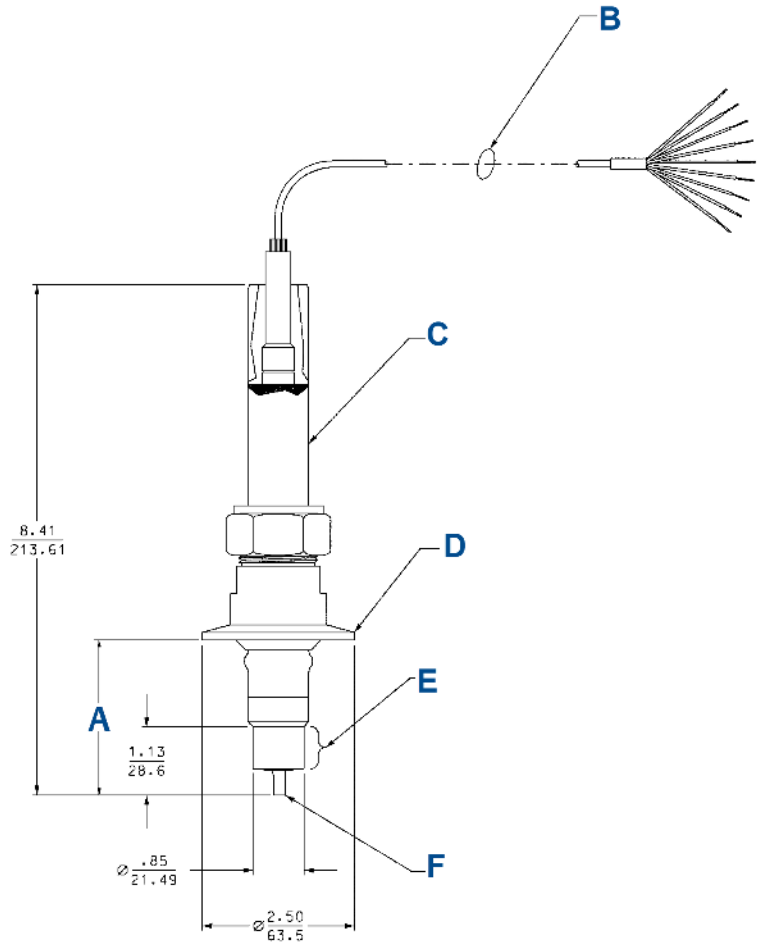

A. Dimension (see Table 4)
B. Connection. Preamp cap adapter with cable code C08/C30, PN 23991 -01 -01
C. 316 stainless steel non-glass ISFET sensor with Pt-100.
D. 2-in. Tri Clamp adapter, SQP10098-LQD (SQ11109: formerly PN 23513-00). Order and ship separately.
E. Reference
F. Electrode

Note
Dimensions are in inches/millimeters.

Table 4: Insertion Depth (A)

Minimum	Maximum
2.55 in. (64.86 mm)	6.00 in. (152.4 mm)

In-line tee mounting adapters

These versatile in-line tees can be installed directly in process piping or in slip streams. Tees are offered in PVC and CPVC and can connect to ¾-, 1-, and 1½-in. process lines. Tees with union fittings offer quick and easy access and eliminate damage from cable twisting.

Table 5: PVC Ordering information and specifications

Part number	**915240-03**	**915240-04**	**915240-05**
Reference image			
Process connection	¾-in. FNPT	1-in. FNPT	1½-in. FNPT
Sensor connection	Union assembly connects to 1-in. MNPT rear-facing threads on sensor		
Nominal tee size	2 inches		
Materials of construction	PVC, schedule 80		
O-ring material	Buna N		
Maximum rating	60 psig (515 kPa) at 120°F (49°C)		
Sensor type	**Compatible sensor models[1]**		
pH/ORP	Rosemount 396P, 389, 3500[2], and 3900[2]		
Dissolved oxygen	Rosemount 499ADO		
Ozone	Rosemount 499AOZ		
Chlorine	Rosemount 499ACL		

(1) *Sensor models shown are for integral cable connections. Corresponding Variopol (VP) connection sensors can also be used.*
(2) *Rosemount 3900 and 3500 sensors require use of PN S10283-LQD to be compatible with 915240-03, -04, or -05 in-line tees (see Figure 7).*

Figure 7: PN S10283-LQD Adapter with 915240-03, 04, or -05 In-line Mounting Tee



Table 6: CPVC Ordering information and specifications

Part number	**2002011**	**23567-00**
Reference image		
Process connection	1-in. FNPT	1½-in. socket
Sensor connection	Connects directly to 1-in. MNPT forward facing threads on sensor	Union assembly connects to 1-in. MNPT threads on sensor
Nominal tee size	1½ inches	
Materials of construction	CPVC, schedule 80	
O-ring material	None	Buna N
Maximum rating	150 psig (1136 kPa) at 150 °F (65 °C)	65 psig (549 kPa) at 122 °F (50 °C)
Sensor type	**Compatible sensor models[1]**	
pH/ORP	Rosemount 396P, 389, 3500, and 3900	
Dissolved oxygen	Rosemount 499ADO	
Ozone	Rosemount 499AOZ	
Chlorine	Rosemount 499ACL	

(1) *Sensor models shown are for integral cable connections. Corresponding VP connection sensors can also be used.*

Standard retraction assemblies

Retraction mounting assemblies allow for sensors to be removed from the process for cleaning, service, or replacement while the process remains online. Standard and high-pressure retraction assemblies use a ball valve to isolate the process while the sensor is serviced.

Table 7: Ordering information and specifications

Part number	**23240-00**	**23765-00**	**23724-00**
Reference image			
Process connection	1½-in. FNPT	1¼-in. MNPT	1-in. MNPT
Sensor connection	Requires PN 23166-00 or 23166-01 (ordered separately) to connect to 1-in. diameter tube on retractable sensor	Connects to 1-in. diameter tube on retractable style sensor	Connects to ¾-in. diameter tube on retractable style sensor
Wetted materials	316 SST, PTFE		316 SST, FKM
Maximum temperature	32 to 212 °F (0 to 100 °C)		392 °F (200 °C)
Maximum pressure	100 psig (790 kPa)	200 psig (1481 kPa)	100 psig (790 kPa)
Maximum retraction pressure	For 21-in. or shorter sensors: 64 psig (542 kPa) For 21- to 36-in. long sensors: 35 psig (343 kPa)		100 psig (790 kPa)
Other information	A 1½-in. MNPT close nipple (PN 93101-02) can be used to connect ball valve to FNPT process connections.	If ball valve is already available, the retraction assembly (PN 23796-00) can be ordered alone (see Figure 8).	N/A
Sensor type	**Compatible sensor models**(1)		
pH/ORP	Rosemount 396R, 398R, 385+, 3400HT, and RBI-547		N/A
Conductivity	N/A	Rosemount 402	Rosemount 140

(1) *Sensor models shown are for integral cable connections. Corresponding Variopol (VP) connection sensors can also be used.*

Figure 8: Retraction Assembly without Ball Valve (PN 23796-00)



Figure 9: Retraction Assembly (PN 23240-00) and Process Connector (PN 23166-00 or 23166-01) with Rosemount 396R pH Sensor

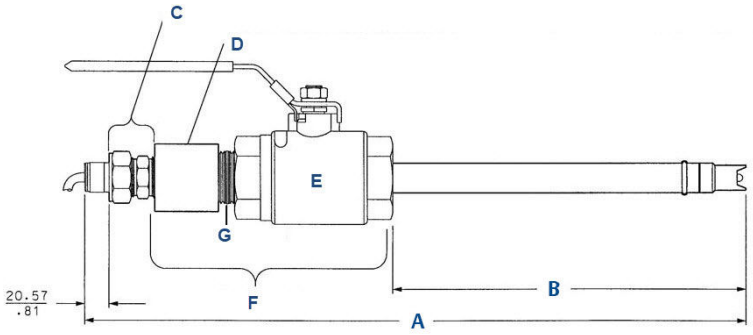

A. Dimension (see Table 8)
B. Dimension (see Table 8)
C. Process connector (PN 23166-00 or 23166-01) (not included with ball valve kit)
D. 1 ½-in (38 mm) to 1-in (25mm) reducer (PN 9310104)
E. Ball valve (PN 934065)
F. Ball valve kit (PN 23240-00)
G. 1 ½-in close nipple (PN 931012)

Note
Dimensions are in millimeters/inches.

Table 8: Rosemount 396R Insertion Lengths for Retraction Assembly 23240-00

Sensor tube length	A	B (maximum)
21-in (533 mm)	23.1-in (587 mm)	12.9-in (328 mm)
36-in (914 mm)	37.58-in (954.5 mm)	27.4-in (696 mm)

Figure 10: Retraction Assembly (PN 23765-00) with Rosemount 402 Conductivity Sensor

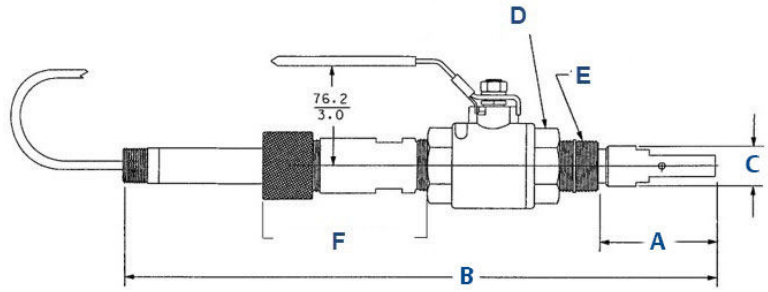

A. Dimension (see Table 9)
B. Dimension (see Table 9)
C. 30.2 mm (1.19 in.)
D. 1 ¼-in full port ball valve (PN 9340078)
E. 1 ¼-in to 11 ½-in NPT nipple (PN 4342M)
F. Retraction kit (PN 23796-00)

Table 9: Rosemount 402 Insertion Lengths for Retraction Assembly 23765-00

Description	Assembly kit	A (minimum to maximum) (Inches (mm))	B (Inches (mm))
Rosemount 402-11	23765-00	3.21 to 5.34 (82 to 136)	18.3 (460.5)

Table 9: Rosemount 402 Insertion Lengths for Retraction Assembly 23765-00 *(continued)*

Description	Assembly kit	A (minimum to maximum) (Inches (mm))	B (Inches (mm))
Rosemount 402-12	23765-00	2.34 to 4.47 (59 to 114)	17.33 (440.2)
Rosemount 402-13	23765-00	2.36 to 4.49 (60 to 114)	17.33 (440.2)

Figure 11: Rosemount with Ball Valve Kit (PN 23724-00)

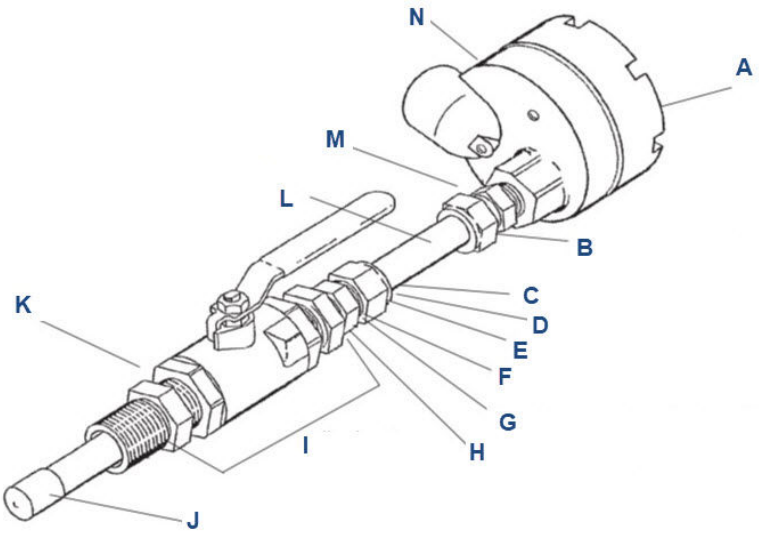

A. Junction box cover
B. Junction box compression fitting (PN 9310120)
C. Sensor compression fitting nut(1)
D. PEEK split ring (inside)(1)
E. PEEK ferrule (inside)(1)
F. Compression fitting body(1)
G. Viton® O-ring (inside) (PN 9550200)
H. Reducing bushing
I. Ball valve kit (PN 23724-00)
J. Flared mechanical stop
K. 1-in. (25.4 mm) NPT hex nipple
L. Sensor tube
M. Nylon ferrule (inside)
N. Junction box

(1) Included in kit PN 23730-00

High pressure retraction assemblies

Table 10: Ordering information and specifications

Part number	**23311-00**	**23311-01**
Reference image		
Process connection	1½-in. MNPT connection to ball valve (sold separately)	
Sensor connection	Connects to ⅝-11 threads on sensor	
Wetted materials	316 SST, PTFE, EP	
Maximum operating temperature	392 °F (200 °C)	
Maximum operating pressure	295 psig (2036 kPa)	
Maximum retraction pressure	295 psig (2135 kPa [abs])	35 psig (343 kPa [abs])
Maximum insertion travel	10½-in. (267 mm)	12-in. (305 mm)
Maximum insertion travel using PN 9340065	6 1/2-in. (165 mm)	8-in. (203 mm)
Weight/shipping weight	12/15 lb. (5.5/7.0 kg)	9/12 lb. (4.5/5.5 kg)
Other information	Requires ball valve PN 9340065 (sold separately)	
Sensor type	**Compatible sensor models[1]**	
pH/ORP	Special order required, consult factory	
Conductivity	Rosemount 228-20	

(1) *Sensor models shown are for integral cable connections. Corresponding Variopol (VP) connection sensors can also be used.*

Figure 12: Manual Retraction Assembly PN 2311-01 Dimensional Drawing

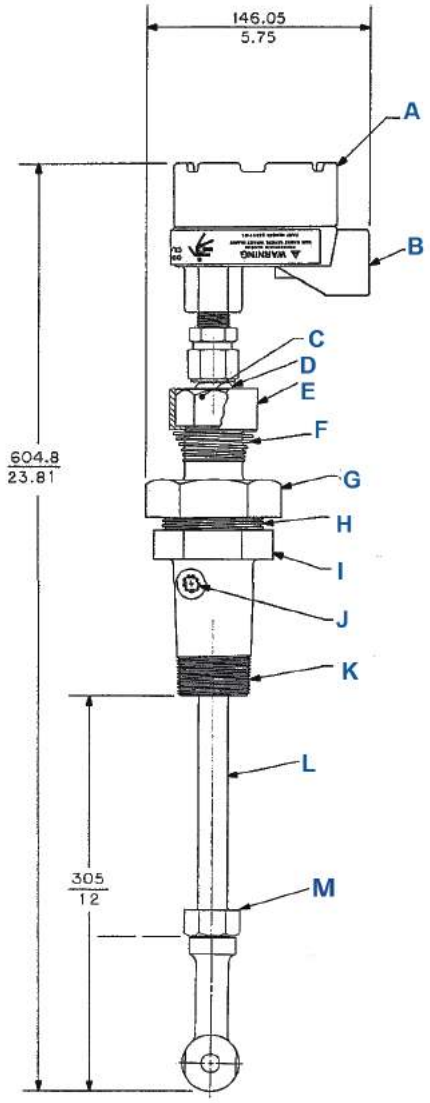

A. Junction box with screw cap
B. ¾-in. FNPT
C. Collet nut
D. Collet
E. Nut guard
F. Nut guard spring
G. 3-in. hex union nut
H. 2.531-in. 8 ACME thread
I. 2⅝-in. hex retraction chamber
J. ⅛-in. MNPT plug
K. 1½-in. MNPT
L. 316 stainless steel ¾-in. O.D. tube
M. Manual retraction assembly

Note
Dimensions are in millimeters/inches.

Figure 13: Mechanical Retraction Assembly PN 23311-00 Dimensional Drawing

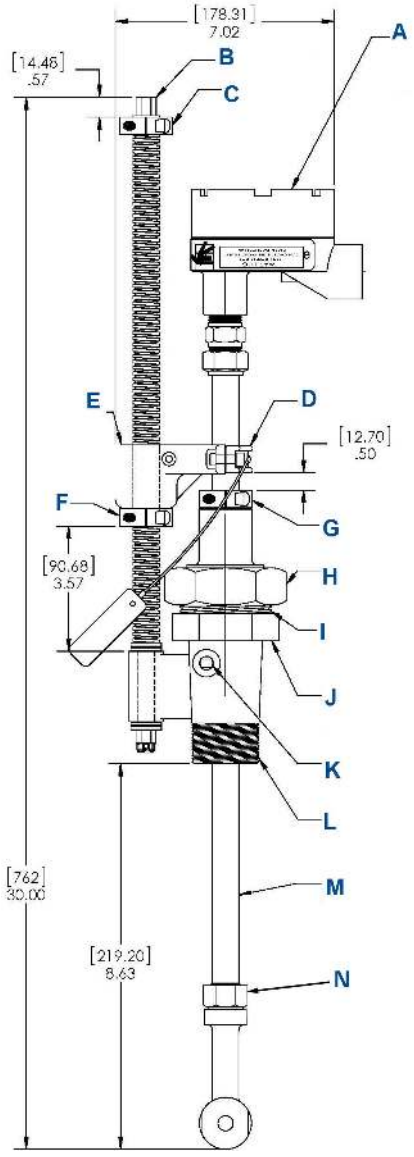

A. Junction box with screw cap
B. Lead screw
C. Travel stop collar "B"
D. Cap
E. Nut housing
F. Travel stop collar "A"
G. Retraction stop collar
H. 3-in. hex union nut
I. 2.531-in. 8 ACME thread type
J. 2⅝-in. hex retraction chamber
K. ⅛-in. MNPT plug type
L. 1½-in. MNPT
M. Ø ¾-in. tube 316 stainless steel
N. Mechanical retraction assembly

Note
Dimensions are in millimeters/inches.

Table 11: Ball valve ordering information and specifications

Part number	9340065
Process connection	1½-in. FNPT
Sensor connections	Connects to 1½-in. MNPT threads on 23311-00 or 23311-01 retraction assembly
Wetted materials	316 SST, PTFE
Maximum temperature and pressure	382 °F (194 °C) at 295 psig (2135 kPa [abs]) OR 392 °F (200 °C) at 251 psig (1832 kPa [abs])

Low flow cells

Low flow cells are suitable for many installations, especially applications where it is impractical to divert a larger volume of sample, particularly if the sample must be sent to waste. Valved rotameters are also available to adjust and measure sample flow in side-stream applications. Accurate control of flow is especially important when measuring dissolved oxygen, chlorine, and ozone.

Table 12: Polycarbonate low flow cell ordering information and specifications

Part number	**24091-00**	**24091-01**	**24091-02**
Reference image			
Process connection	¼-in. FNPT inlet and outlet(1)		
Sensor connection	Connects to 1-in. MNPT threads on sensor		Connects to ¾-in. MNPT threads on sensor
Wetted materials	Body and nut: Polycarbonate/polyester blend; ¼-in. fittings: 316 SST; O-ring: silicone		
Maximum temperature	158 °F (70 °C)		
Maximum pressure	90 psig (621 kPa)		
Special features	None	Bubble shedding nozzle (not shown in reference image)	None
Sensor type	**Compatible sensor models(2)**		
pH/ORP	Rosemount 396P, 389, 3500, and 3900	N/A	N/A
Conductivity	N/A	N/A	Rosemount 400
Dissolved oxygen	Rosemount 499ATrDo and 499ADO	Rosemount 499ADO	N/A
Ozone	Rosemount 499AOZ	N/A	N/A
Chlorine	Rosemount 499ACL		N/A

(1) *Flow cell has ¼ inches FNPT inlet and outlet and is supplied with optional ¼-in. MNPT to ¼ -in. OD tubing fittings.*
(2) *Sensor models shown are for integral cable connections. Corresponding Variopol (VP) connection sensors can also be used.*

Figure 14: Low Flow Cell (PN 24091-00)

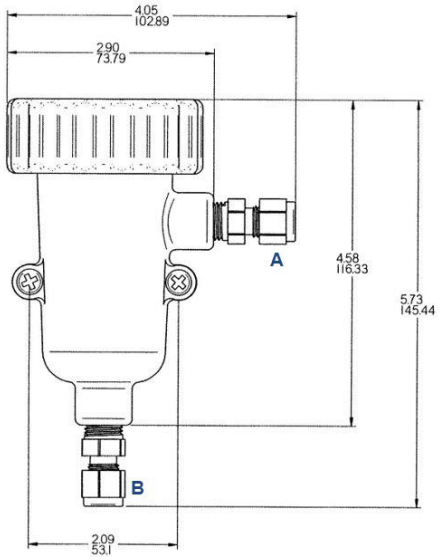

A. Outlet
B. Inlet

Note
Dimensions are in inches/millimeters.

Table 13: Stainless steel low flow cell ordering information and specifications

Part number	**S10240 (SQ 7716)**	**S10290 (SQ 7637)**
Reference image		
Process connection	¼-in. FNPT inlet and outlet	
Sensor connection	Connects to 1-in. MNPT threads on sensor	Connects to ¾-in. MNPT threads on sensor
Wetted materials	316 SST	
Maximum temperature	392 °F (200 °C)	
Maximum pressure	250 psig (1724 kPa)	
Sensor type	**Compatible sensor models[1]**	
pH/ORP	Rosemount 396P, 389, 3500, and 3900	Rosemount RBI-546
Conductivity	N/A	Rosemount 400
Dissolved Oxygen	Rosemount 499ADO	N/A

(1) *Sensor models shown are for integral cable connections. Corresponding Variopol (VP) connection sensors can also be used.*

Low flow panel

The low flow panel uses gravity to control flow, eliminating the need for pressure regulators, valves, and rotameters.

The overflow sampler consists of two concentric tubes with the annular space closed at the bottom. The sample enters through a fitting at the bottom of the outer tube and fills the annular space between the tubes, eventually overflowing into the inner tube and running to drain. A second fitting on the outside tube connects to a low flow cell, which holds the sensor. The outlet from the low flow cell joins the drain from the overflow sampler.

The flow of sample to the sensor is controlled by the slight head pressure of the outer tube. The flow controller provides a steady flow of 2 gph (7.5 liters per hour) if the inlet flow is in the specified range of 3–80 gph (11.4 –304 liters per hour).

Figure 15: PN 00390-7101-0001 Low Flow Panel with Rosemount 3900 pH Sensor



Table 14: Ordering information and specifications

Part number	**00390-7101-0001**
Process connection	Sample inlet fitting is ¼-in. FNPT
Inlet flow	3–80 gallons per hour (11.4–304 liters per hour)
Inlet pressure(1)	3–65 psig (122–549 kPa [abs])
Temperature	32–122 °F (0–50 °C)
Sensor type	**Compatible sensor models(2)**
pH/ORP	Rosemount 396, 389, 3500, and 3900
Dissolved Oxygen	Rosemount 499ATrDo and 499ADO
Ozone	Rosemount 499AOZ
Chlorine	Rosemount 499ACL

(1) *The minimum inlet pressure is required to open a check valve, which prevents the flow cell from draining if sample flow is lost. Removing the check valve lowers the inlet pressure requirement to a few feet of water head.*

(2) *Sensor models shown are for integral cable connections. Corresponding Variopol (VP) connection sensors can also be used.*

Figure 16: Low Flow Panel (PN 00390-7101-0001)

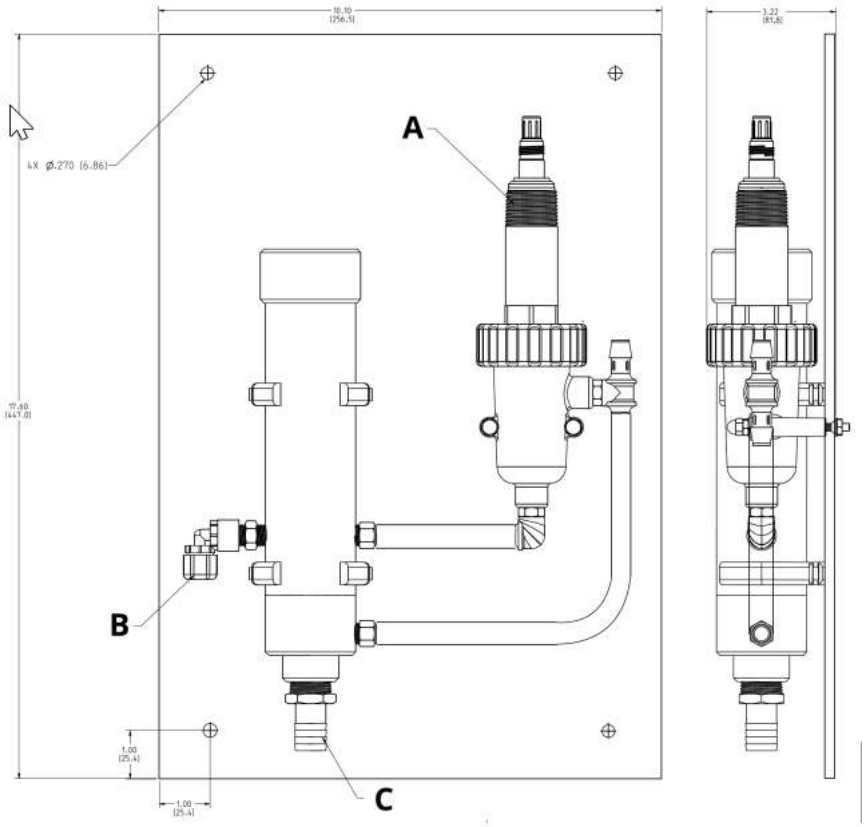

A. pH sensor and VP cable not included
B. ¼-in. tube fitting
C. ¾-in. barbed fitting

Note
Dimensions are in inches/millimeters.

Table 15: Low Flow Panel Spare Parts Ordering Information

Part number	Description
24039-01	Flow cell without bubble shedding nozzle
24040-00	O-ring kit, two 2-222 and one 2-024 silicone O-rings with lubricant
33812-00	Dust cap for constant head flow controller
9322032	Elbow, ¼ in. FNPT x ¼ in. OD tubing
9350029	Check valve, ¼ in. FNPT
33823-00	Outside tube for constant head device
SQP10009-LQD (SQ 9373)	Constant head flow controller only (no flow cell)

Rotameters for sample flow control

Emerson offers a variety of rotameters with integral valves to help measure and control flow in side-stream samples.

Table 16: Ordering information and specifications

Part number	**9390004**	**196-898754**
Reference image		
Process connections	¼-in. FNPT (316 SST)	⅛-in. FNPT (brass)
Wetted materials	Acrylic, 316 SST, FKM	Polycarbonate, 316 SST, brass, Buna N
Maximum temperature	130 °F (54 °C)	
Maximum pressure	100 psig (790 kPa)	
Required range of flow	0.4–5.0 gal/hr (1.5–19.0 L/hr)	2.0–20.0 gal/hr (7.6–76.0 L/hr)
Sensor type	**Compatible sensor models**[1]	
pH/ORP	All pH sensor models: 2-5 gal/hr (7.6–19 L/hr)	
Dissolved oxygen	Rosemount 499ADO: 2-5 gal/hr (7.6-19 L/hr)	N/A
Ozone	Rosemount 499AOZ: 2-5 gal/hr (7.6-19 L/hr)	N/A
Chlorine	N/A	Rosemount 499ACL: 8-15 gal/hr (30-57 L/hr)

(1) *Recommended flow rates are shown for each sensor model when used with low flow cells.*

Submersion mounting adapters

Table 17: Ordering Information and Specifications

Part number	**9320057**
Reference image	
Process connections	1-in. FNPT rear-facing threads on adapter for connection to submersion pipe
Sensor connection	Connects to 1-in. MNPT rear-facing threads on sensor
Material of construction	PVC, Schedule 80
Maximum temperature	Ambient
Maximum pressure	Ambient
Sensor style	**Compatible sensor models(1)**
pH/ORP	Rosemount 396P, 389, 3500, and 3900
Dissolved Oxygen	Rosemount 499ADO
Ozone	Rosemount 499AOZ
Chlorine	Rosemount 499ACL

(1) *Recommended flow rates are shown for each sensor model when used with low flow cells.*

Handrail mounting systems

The Emerson Handrail Mounting System (HRMS) floating ball system (BB11) enable convenient installations whenever a pH, ORP, or dissolved oxygen sensor must be installed in a tank, aeration basin, pond, or open channel. See the HandRail Mounting System Product Data Sheet for more information on these products.

Jet spray cleaner

The jet spray cleaner is intended for use with pH, ORP, or oxygen sensors. It directs a spray of air, water, or other cleaning fluid at the end of the sensor flushing away suspended solids that have accumulated. The cleaner can be used only if the sensor is installed in a tank or basin; it is not suitable for in-pipe installations.

Cleaning frequency and spray duration is controlled by an interval timer in the analyzer. During cleaning the analyzer can be programmed to hold the last reading, thus avoiding spurious outputs and relay actions. This hold can be continued beyond the end of the cleaning period, allowing the sensor time to stabilize before the analyzer returns to normal operation. Cleaning intervals and frequency and the best cleaning agent can be determined only by experience; several trials will likely be necessary to determine the best program.

Table 18: Ordering information and specifications

Part number	**12707-00**
Reference image	
Process connections	2-in. MNPT rear facing threads or use sensor/conduit
Sensor connection	Connects to 1-in. MNPT threads on sensor
Wetted materials	316 SST, polypropylene, PVC
Maximum temperature	212 °F (100 °C)
Maximum pressure	50 psig (446 kPa)
Sensor type	**Compatible sensor models[1]**
pH/ORP	Rosemount 396P, 389, 3500, and 3900
Dissolved oxygen	Rosemount 499ADO
Ozone	Rosemount 499AOZ
Chlorine	Rosemount 499ACL

(1) *Recommended flow rates are shown for each sensor model when used with low flow cells.*

Figure 17: Jet spray cleaner

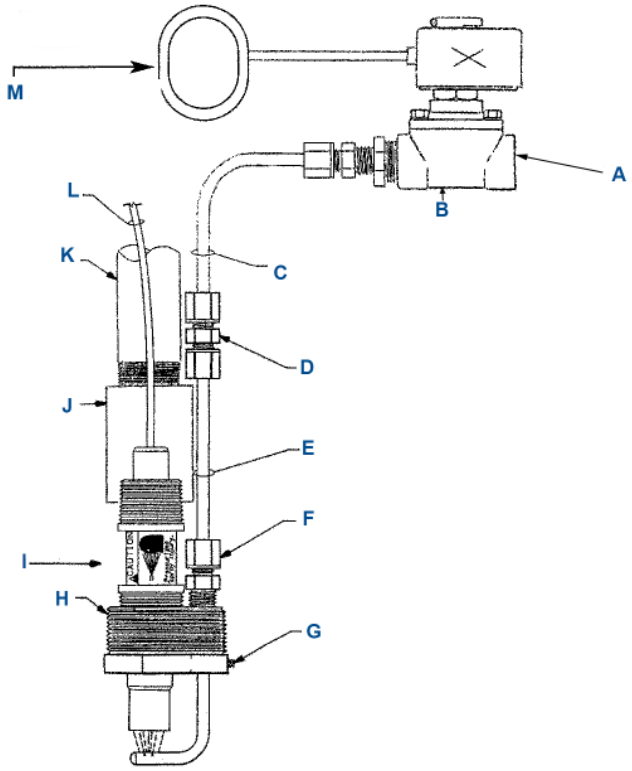

A. Cleaning solution (supplied by customer)
B. Solenoid valve or manual valve (supplied by customer)
C. Corrosion resistant tubing (supplied by customer)
D. Polypropylene ¼-in. (6.4 mm) compression fitting
E. ¼-in. (6.4 mm) 316 stainless steel
F. ¼-in. (6.4 mm) polypropylene
G. Stainless set screw for adjustable spray nozzle height
H. 2-in. (50.8 mm) NPT threads
I. Sensor
J. 1-in. (25.4 mm) PVC coupling for submersible applications (supplied by customer)
K. 1-in. (25.4 mm) PVC or stainless conduit (supplied by customer)
L. Cable
M. Timer supplied by customer or use timer feature in Rosemount instrument

Figure 18: Jet spray cleaner with pH sensor



Junction boxes and preamplifiers

Emerson offers junction boxes and extension cables to support liquid analysis measurement installations with longer runs of cable between the sensor and the transmitter. Emerson remote junction boxes are weather-proof and are available with or without preamplifiers for a wide variety of sensor types. To replace the sensor, disconnect the cable at the junction box. The cable between the junction box and the analyzer never needs to be disturbed.

Junction Box PN 23550-00 is used for extending any Rosemount liquid analysis sensor cable by connecting the sensor cable to an internal extension board. Junction box PN 23555-00 is used for pH and ORP analog sensors only and has a preamplifier board (PN 23557-00) mounted internally. In addition to remote mount junction boxes, Emerson also offers a sensor-head mounted junction box with a preamplifier for retractable style pH/ORP sensors. Extension cables for connecting junction boxes to the transmitter are sold separately.

Table 19: Junction box ordering information and specifications

Part number	**23550-00**	**23555-00**	**23709-00**
Reference image			
Preamplifier	None	Includes preamplifier PN 23557-00 with FM, CSA, and ATEX intrinsically safe hazardous location approvals	
Mounting	Mounts to wall or pipe using mounting bracket PN 2002565 (ordered separately)		Mounts to back of Rosemount retractable pH/ORP sensors using a compression fitting
Dimensions	4-in. (102 mm) D x 5-in. (127 mm) H x 8.25-in. (210 mm) W		5-in. D x 5 3/8-in. H x 4-in. W
Material of construction	ABS plastic		Aluminum alloy
Compatible sensor models	Most Rosemount liquid analysis sensors other than pH/ORP sensors without preamp. See Table 20 for detail.	Any Rosemount pH/ORP sensor without a preamp. See Table 20 for detail.	Rosemount pH/ORP sensors 396R, 398R, 3400HT, and RB547 options without a preamp.
Compatible transmitter models	Rosemount 56, 1056, 1057, 1066, and 5081		

Figure 19: Junction boxes PN 23550-00 and PN 23555-00 dimensional drawing

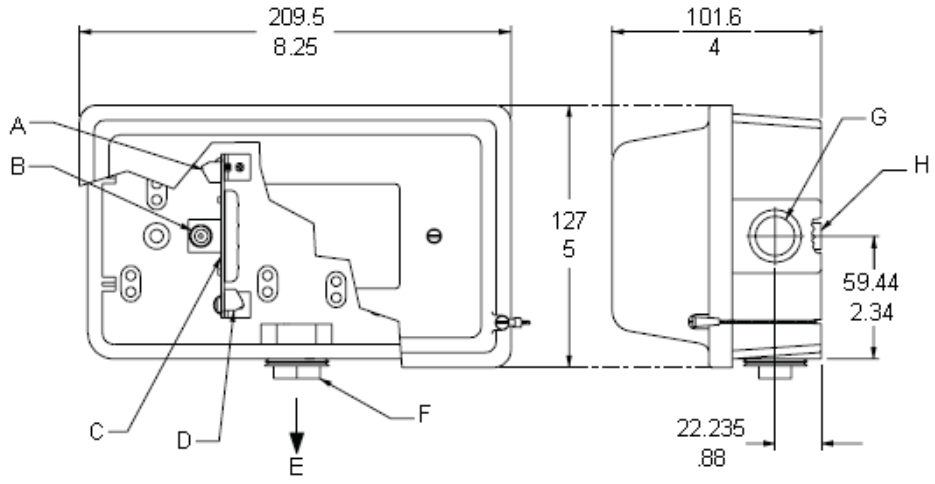

Note
Dimensions are in millimeters/inches.

A. TB1
B. BNC
C. Preamp assembly with cover
D. TB2
E. To sensor
F. ¾ in. NPT plug
G. ¾ in. FPT to analyzer
H. Mounting insert No. 10-32, two places

Figure 20: Junction Box PN 23550-00 has an extension board but no preamplifier



Figure 21: Junction box PN 23555-00 has a preamplifier



Remote junction boxes can be mounted to a wall or a pipe of up to 2-in. (52 mm) diameter with mounting bracket PN 2002565. This mounting bracket includes a SST U-bold and SST screws and washers needed for mounting.

Figure 22: PN 2002565 mounting bracket for remote junction box PN 23550-00 and PN 23555-00



Cable glands should be used to seal the cable where it enters the transmitter or junction box. Cable glands also prevent the weight of the cable from pulling on and dislodging wiring connections in the analyzer. Cable gland kit PN 23554-00 provides 5 cable glands that fit all Rosemount liquid analysis transmitters and junction boxes.

Figure 23: Cable gland kit PN 23554-00 includes five cable glands

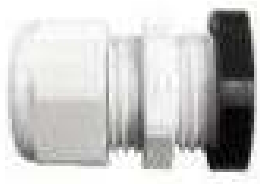

Extension cable for long distance sensor wiring

Emerson offers junction boxes and extension cables to support liquid analysis measurement installations with longer runs of cable between the sensor and the transmitter.

Table 20 provides compatibility and ordering information for extension cables, as well as recommendations for maximum cable length for each type of Rosemount liquid analysis sensor. When using this table to design a sensor wiring architecture, the following best practices should be considered:

- The maximum distances listed are recommendations only.
- Long cable distances may degrade the signal. For best performance, install long cable runs in a noise-free environment.
- For contacting conductivity sensors, long cable runs will result in some loss of linearity.
- An Emerson wireless solution may be a better choice than using extended wire lengths for some applications.
- When using a remote junction box, install the junction box close to the sensor and use an extension cable to run the signal from the junction box to the instrument.
- The use of factory prepared cable is strongly recommended. The cables designated as “prepped” are prepared with the cable jacket and wires stripped and ready for a quick installation.

Table 20: Extension cable ordering information and distance recommendations

Measurement	Sensor model or type	Maximum cable length		Junction box part number	Extension cable part number(1)	
		Sensor to junction box	Sensor to transmitter total(2)		Prepped	Unprepped
pH/ORP	No preamp in sensor	50 ft. (15 m)	200 ft. (61 m)	23555-00	23646-01	9200273
	Preamp in sensor	50 ft. (15 m)	200 ft. (61 m)	33550-00		
	Preamp in sensor mounted junction box	N/A	200 ft. (61 m)	Included		
Contacting conductivity(3)	Sensor mounted junction box	N/A	200 ft. (61 m)	N/A	23747-00	9200275
	No sensor mounted junction box	50 ft. (15 m)	200 ft. (61 m)	23550-00		
Toroidal conductivity	Rosemount 225, 226, 228	50 ft. (15 m)	200 ft. (61 m)	23550-00	23294-05	9200276
	Rosemount 202	50 ft. (15 m)	100 ft. (30 m)			
	Rosemount 242, 245	N/A	200 ft. (61 m)	23550-00	23909-00	
Chlorine, dissolved oxygen, and ozone	Rosemount 499ACL, 499AOZ, 499ADO	50 ft. (15 m)	200 ft. (61 m)	23550-00	23747-00	9200275

(1) *9200273 is the raw cable for prepped cable 23646-01. 9200275 is the raw cable for prepped cable 23747-00. 9200276 is the raw cable for prepped cables 23909-00, 23294-00 (unshielded), 23294-04 (shielded for improved electromagnetic interference/radio frequency interference (EMI/RFI) protection), and 23294-05 (shielded with additional shield wire).*

(2) *Maximum cable lengths listed for “sensor-to-transmitter total” include the length of sensor cable between the sensor and the junction box plus the length of extension cable between the junction box and transmitter. For instance, if the cable from the sensor to the junction box is 50 ft. (15 m), the max extension cable length from the junction box to the transmitter should be 150 ft. (45m).*

(3) *Excludes conductivity sensor Rosemount 410VP. For 410VP the correct extension cable part number is 24289-00.*

Calibration buffers and standard solutions

Emerson offers a range of calibration buffers and standard solutions for use with its pH, ORP, and conductivity sensors. For pH, Emerson offers pH 4.01, pH 6.86, and pH 9.18 NIST buffer solutions that meet most pH calibration requirements. Accuracy is ±0.02 pH at 25°C (77°F). A chart listing the pH of the buffer at other temperatures is provided on the label.

Table 21: pH buffer solution ordering information and specifications

Part number	Description	Size
9210012	pH 4.01 buffer solution	16 oz. (473 ml)
9210013	pH 6.86 buffer solution	16 oz. (473 ml)
2210014	pH 9.18 buffer solution	16 oz. (473 ml)

Emerson offers a 475 mV ORP (redox) standard solution that meets most ORP sensor calibration requirements.

Table 22: ORP calibration standard solution ordering information and specifications

Part number	Description	Size
R508-8oz	Oxidation reduction potential (ORP) calibration standard 460 ± 10 mV	8 oz. (237 ml)

Emerson offers conductivity standard solutions ranging from 200–5000 µS/cm. To determine the best standard to use, consult the transmitter product data sheet and choose a standard with a conductivity value in the recommended range for the sensor cell constant.

Table 23: Conductivity calibration standard solution ordering information and specifications

Part number	Description	Size
05010781899	Conductivity standard solution, 200 µS/cm	1 qt. (0.95 liter)
05010797875	Conductivity standard solution, 200 µS/cm	1 gal. (3.8 liter)
05010782468	Conductivity standard solution, 1000 µS/cm	1 qt. (0.95 liter)
05010783002	Conductivity standard solution, 1000 µS/cm	1 gal. (3.8 liter)
05000705464	Conductivity standard solution, 1409 µS/cm	1 qt. (0.95 liter)
05000709672	Conductivity Standard Solution, 1409 µS/cm	1 gal. (3.8 liter)
9210004	Conductivity standard solution, 2000 µS/cm	0.53 qt. (0.5 liter)
05000706787	Conductivity standard solution, 2000 µS/cm	1 qt. (0.95 liter)
05000708083	Conductivity standard solution, 2000 µS/cm	1 gal. (3.8 liter)
05010782147	Conductivity standard solution, 5000 µS/cm	1 qt. (0.95 liter)
05010782026	Conductivity standard solution, 5000 µS/cm	1 gal. (3.8 liter)

Conductivity validation unit

The Conductivity Validation Unit (CVU) consists of a factory-calibrated Rosemount 1056 Intelligent Four-Wire Transmitter and a Rosemount 404 Low Flow Conductivity Sensor housed in a rugged carrying case. The CVU is ideal for applications where calibrating a conductivity sensor against a standard solution is impractical. This includes sensors that cannot easily be removed from the process piping and sensors having 0.01/cm cell constants for which stable low conductivity calibration standards are not available. The CVU is widely used for calibrating conductivity sensors in water for injection applications.

Using the CVU is easy:

1. Connect the Rosemount 404 sensor in series with the process sensor using the tubing provided with the CVU.
2. Allow the sample to flow past both sensors.
3. Once readings are stable, adjust the process analyzer reading to match the CVU reading.

The calibration system is completely enclosed. The solution never contacts atmospheric carbon dioxide, which can contaminate low conductivity standards, leading to erroneous calibration. Thus, the CVU is ideal for calibrating 0.01/cm cell constant sensors. The CVU is available in two versions as shown in Table 24.

Figure 24: Rosemount conductivity validation unit



Table 24: Ordering information and specifications

Part number	Number of sensors	Description
CVU-01	1	One 404-11-17 stainless steel sensor with a 0.01 cell constant pre-wired to the 1056-01-20-38-AN analyzer
CVU-02	2	One 404-11-17 stainless steel sensor with a 0.01 cell constant and one 404-12-17 stainless steel sensor with a 0.1 cell constant prewired to the model 1056-01-20-30-AN analyzer

00813-0100-4044
Rev. AC
May 2023

For more information: **Emerson.com**

©2023 Emerson. All rights reserved.

Emerson Terms and Conditions of Sale are available upon request. The Emerson logo is a trademark and service mark of Emerson Electric Co. Rosemount is a mark of one of the Emerson family of companies. All other marks are the property of their respective owners.

ROSEMOUNT™

EMERSON™