Product Data Sheet
00813-0100-4016, Rev UC
March 2023

Rosemount™ DP Level Transmitters and 1199 Diaphragm Seal Systems



Applications

- Level, flow, pressure, interface, density
- Extreme hot and cold temperatures
- Corrosive, clogging, or viscous processes
- Hygienic requirements
- Special process connections

Proven, reliable, and innovative technologies

Access information when you need it with asset tags

Newly shipped devices include a unique QR code asset tag that enables you to access serialized information directly from the device. With this capability, you can:

- Access device drawings, diagrams, technical documentation, and troubleshooting information in your MyEmerson account
- Improve mean time to repair and maintain efficiency
- Ensure confidence that you have located the correct device
- Eliminate the time-consuming process of locating and transcribing nameplates to view asset information

Rosemount Level Transmitters

Level transmitters combine world-class Rosemount pressure instrumentation with direct-mount seals, all in a single integrated model number.

Rosemount 3051SAL, 3051L, and 2051L Level Transmitters

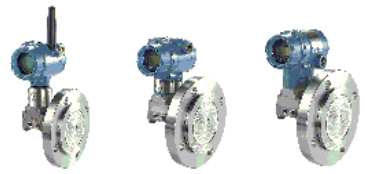

- Achieve best-in-class system reliability with all welded systems
- Wireless configurations provide new data access
- Connect to virtually any process with a comprehensive offering of process connections, fill fluids, direct mount or capillary connections, and materials
- Quantify and optimize total system performance with QZ option

Contents

Proven, reliable, and innovative technologies 2
Rosemount 3051S Electronic Remote Sensor (ERS™) System 6
Rosemount 3051S Scalable™ Level Transmitter 27
Diaphragm seals for Rosemount 3051SAL 42
Rosemount 3051L Level Transmitter ordering information 67
Rosemount 2051L Liquid Level Transmitter 79
Direct mount seal system ordering information 89
Remote mount seal system ordering information 95
Flanged seals 102
Threaded seals 128
Hygienic seals 134
Specialty seals 149
Specifications 158
Product certifications 180
Dimensional drawings 224

Rosemount Tuned-System™ Assemblies optimize results

Rosemount Tuned-System Assemblies utilize a direct mount seal on the high pressure connection and a remote mount (Capillary) connection on the low pressure connection. This improves overall performance and installation compared to a traditional Balanced Seal System.

Figure 1: Comparison of Balanced System to Tuned-system

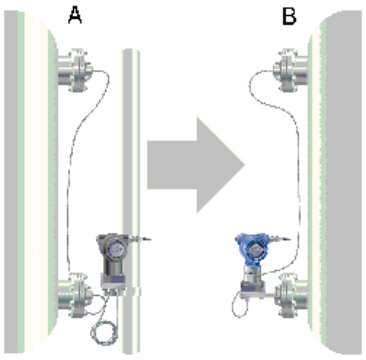

A. Balanced system with two equal lengths of capillary
B. Tuned-system assembly with direct mount plus capillary

- Reduce installed costs by 20 percent by eliminating excess capillary and transmitter mounting hardware
- Improve performance by up to 30 percent
- Increase response time by up to 80 percent
- Reduce risk with up-front quantified performance reports

Rosemount 3051S Electronic Remote Sensor (ERS)™ System

The Rosemount 3051S ERS System is a digital DP Level architecture that links two Rosemount 3051S Pressure Sensors together electronically. The pressure sensors are synchronized on a single power loop where the differential pressure, level, and volume are calculated and transmitted using a standard two-wire 4–20 mA HART® signal.

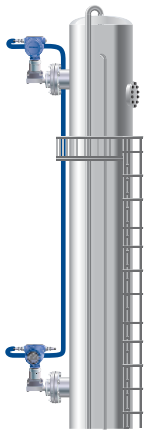

A digital upgrade to a proven technology

- 90 percent improvement in time response
- Elimination of temperature effects and measurement drift
- Multivariable capabilities including DP, P_{LO}, P_{HI}, volume, and level
- Proven Rosemount 3051S Sensor technology

Simplified installations and maintenance routines

- Elimination of wet legs or dry legs
- Easy installations without need for heat tracing and insulation
- Proactive maintenance and troubleshooting with sensor alerts and diagnostics
- Simplified inventories with sensors and standard cable

Rosemount 1199 Seal Systems

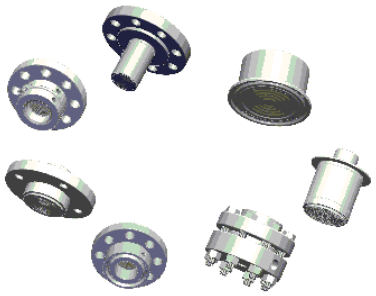

Seal systems provide a reliable process pressure measurement and prevent the process medium from contacting the transmitter diaphragm. Transmitter/diaphragm seal systems should be considered when:

- Process temperature is outside of the operating ranges of the transmitter.
- Process is corrosive and/or requires specific exotic materials of construction.
- Process contains suspended solids or is viscous and is prone to plugging of connections.
- Application requires the use of flush-mount hygienic connections that facilitates CIP/SIP service.
- There is a requirement for easier cleaning of the process from the connections to avoid contamination between batches.

Application flexibility

- Flanged, threaded, and hygienic process connections
- Meets industry standards such as EN 1092-1, ASME B16.5, JIS B2238, ASME B1.20.1, EN 10226-1, GOST 33259-15, ISO 228-1
- Variety of fill fluids applications including cold temperature, hot temperature, and hygienic and food grade
- Three different capillary diameters allow for optimization of accuracy and time response
- Multiple diaphragm coatings for tough applications including corrosion and hydrogen permeation

Reliable system construction

- Welded design with no threaded connections
- 100 percent helium leak tested
- Advanced manufacturing techniques ensure air-free, leak-tight system that is stable over time
- Reliable operation in full vacuum applications

Robust seal design

- Backup convolutions on the diaphragm protect seal integrity
- Recessed diaphragms reduce potential for handling damage

Seal system construction options

Figure 2: Welded-Repairable Construction

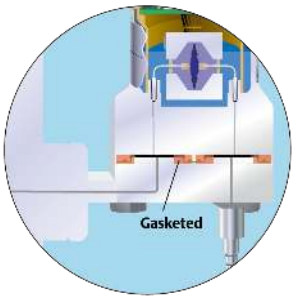

- All connection points welded except gasket between sensor module and transmitter flange
- Transmitter can be re-used if repair work is required

Figure 3: All Welded (Vacuum) Construction

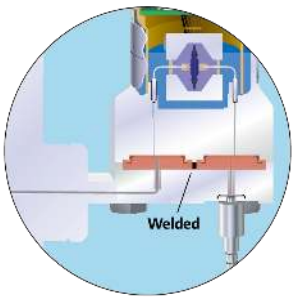

- All connection points welded including welded disk over sensor module isolators
- Ideal for vacuum applications (< 6 psia, 400 mbar-a)
- Seal system and transmitter are not repairable

Rosemount 3051S Electronic Remote Sensor (ERS™) System



The Rosemount 3051S ERS System is a flexible, 2-wire, 4-20 mA HART® architecture that calculates differential pressure (DP) electronically using two pressure sensors that are linked together with a non-proprietary electrical wire.

Ideal applications for the Rosemount 3051S ERS System include tall vessels and distillation columns that have traditionally required long lengths of capillary or impulse piping. When used in these types of applications, the Rosemount 3051S ERS System can deliver:

- More accurate and repeatable DP measurements
- Faster time response
- Simplified installations
- Reduced maintenance

VIEW PRODUCT >

Online product configurator

Many products are configurable online using our Product Configurator. Select the **Configure** button above or visit our website to start. With this tool's built-in logic and continuous validation, you can configure your products more quickly and accurately.

Specifications and options

See the Specifications and options section for more details on each configuration. Specification and selection of product materials, options, or components must be made by the purchaser of the equipment. See the Material selection section for more information.

Sizing and Selection Body

All Rosemount flow meters can be sized to meet your application specific requirements in the DP Flow sizing and selection tool. This tool will verify if a selected product meets your application requirements, provide a comparison between different primary elements, and generate a detailed accuracy comparison graph.

Once a sizing is completed, the configuration tool will help create a complete and valid model code to match your requirements and include any additional options or approvals.

Optimizing lead time

The starred offerings (★) represent the most common options and should be selected for the fastest delivery times. The non-starred offerings are subject to additional delivery lead time.

How to order

Procedure

1. Choose two Rosemounbt 3051S ERS Transmitter models. These may be any combination of Rosemount 3051SAM and Rosemount 3051SAL models.

   Figure 4: Rosemount 3051 SAM

   

   A. Coplanar
   B. In-line

   Figure 5: Rosemount 3051SAL

   

   A. Coplanar
   B. In-line

2. Decide which model will be the ERS Primary (4-20mA loop termination and optional LCD display) and which will be the ERS Secondary. This will be specified by the "Configuration Type" code on each model number.

   

   A. Secondary
   B. Primary

3. Specify two full model numbers per the desired configuration.

   3051SAM1ST2A2E11A2A

   3051SAL1PG4AA1A1020DFF71DA00M5

Rosemount 3051SAM Transmitter for ERS Applications



- Coplanar and in-line sensor module platforms
- Variety of process connections including threaded NPT, flanges, manifolds, and Rosemount Remote Seals
- Available with 15-year stability and 15-year limited warranty

Specification and selection of product materials, options, or components must be made by the purchaser of the equipment.

Required model components

Model

Code	Description
3051SAM	Scalable ERS Measurement Transmitter

Performance class

The Rosemount 3051S ERS System offers three performance class options; Classic, Ultra, and Enhanced ERS system performance. The Classic and Ultra performance classes are suited to lower static pressure and stable temperature conditions. The Enhanced ERS system performance class provides better performance across temperature (–40 to 185 °F) with improved performance at higher static pressure.

Code	Description	
1	Ultra: 0.025% span accuracy, 200:1 rangedown, 15-year stability, 15-year limited warranty	★
2	Classic: 0.035% span accuracy, 150:1 rangedown, 15-year stability	★
4	Enhanced ERS System performance, 15-year stability, 15-year limited warranty	★

Configuration type

Code	Description	
P	ERS - primary	★
S	ERS - secondary	★

Pressure type

Code	Description		
	Module	**Sensor**	
G	Coplanar	Gauge	★
T	In-Line	Gauge	★
E	In-Line	Absolute	★
A	Coplanar	Absolute	

Pressure range

The pressure range should be specified based on the maximum static pressure, not differential pressure.

Code	Description				
	Coplanar gauge	**In-line gauge**	**In-line absolute**	**Coplanar absolute**	
1A	N/A	–14.7 to 30 psig (–1.01 to 2.06 bar)	0 to 30 psia (0 to 2.06 bar)	0 to 30 psia (0 to 2.06 bar)	★
2A	–250 to 250 inH_2O (–621.60 to 621.60 mbar)	–14.7 to 150 psig (–1.01 to 10.34 bar)	0 to 150 psia (0 to 10.34 bar)	0 to 150 psia (0 to 10.34 bar)	★
3A	–393 to 1000 inH_2O (–0.97 to 2.48 bar)	–14.7 to 800 psig (–1.01 to 55.15 bar)	0 to 800 psia (0 to 55.15 bar)	0 to 800 psia (0 to 55.15 bar)	★
4A	–14.2 to 300 psig (–0.97 to 20.68 bar)	–14.7 to 4000 psig (–1.01 to 275.79 bar)	0 to 4000 psia (0 to 275.79 bar)	0 to 4000 psia (0 to 275.79 bar)	★
5A	–14.2 to 2000 psig (–0.97 to 137.89 bar)	–14.7 to 10000 psig (–1.01 to 689.47 bar)	0 to 10000 psia (0 to 689.47 bar)	N/A	★

Isolating diaphragm

Code	Description	
2(1)	316L stainless steel (SST)	★
3(1)	Alloy C-276	★
4(1)(2)	Alloy 400	
5(2)(3)	Tantalum	
6(1)(2)	Gold-plated Alloy 400 (includes graphite-filled PTFE O-Ring)	
7(1)(2)	Gold-plated 316L SST	

(1) *Materials of construction comply with metallurgical requirements highlighted within NACE MR 0175/ISO 15156 for sour oil field production environments. Environmental limits apply to certain materials. Consult latest standard for details. Selected materials also conform to NACE MR 0103 for sour refining environments. Order with Q15 or Q25 to receive a NACE certificate.*

(2) *Not available with pressure sensor/module codes T or E.*

(3) *Tantalum diaphragm material is only available with Pressure Sensor/Module code G.*

Process connection

Code	Description		
	Coplanar module type	**In-line module type**	
A11(1)	Assemble to Rosemount 305 Manifold	Assemble to Rosemount 306 Manifold	★

Code	Description		
	Coplanar module type	**In-line module type**	
A12[1]	Assemble to Rosemount 304 or AMF Manifold with SST traditional flange	Assemble AMF Manifold to ½-14 NPT female process connection	★
A15[1]	Assemble to Rosemount 304 or AMF manifold to SST traditional flange with alloy C-276 drain vents	N/A	★
A22[1]	Assemble to Rosemount 304 or AMF manifold to SST coplanar flange	N/A	★
B11[1][2]	Assemble to one Rosemount Remote Diaphragm Seal with SST transmitter flange	Assemble to one Rosemount Remote Diaphragm	★
E11	Coplanar flange (CS), ¼–18 NPT, 316 SST drain vents	½ –14 NPT female	★
E12	Coplanar flange (SST), ¼–18 NPT, 316 SST drain vents	N/A	★
E13[3]	Coplanar flange (Cast C-276), ¼–18 NPT, Alloy C-276 drain vents	N/A	★
E14	Coplanar flange (Cast Alloy 400), ¼–18 NPT, Alloy 400/ K-500 drain vents	N/A	★
E15[3]	Coplanar flange (SST), ¼–18 NPT, Alloy C-276 drain vents	N/A	★
E16[3]	Coplanar flange (CS), ¼–18 NPT, Alloy C-276 drain vents	N/A	★
E21	Coplanar flange (CS), RC ¼, 316 SST drain vents	N/A	★
E22	Coplanar flange (SST), RC ¼, 316 SST drain vents	N/A	★
E23[3]	Coplanar flange (Cast C-276), RC ¼, Alloy C-276 drain vents	N/A	★
E24	Coplanar flange (Cast Alloy 400), RC ¼, alloy 400/K-500 drain vents	N/A	★
E25[3]	Coplanar flange (SST), RC ¼, Alloy C-276 drain vents	N/A	★
E26[3]	Coplanar flange (CS), RC ¼, Alloy C-276 drain vents	N/A	★
F12	Traditional flange (SST), ¼–18 NPT, 316 SST drain vents	N/A	★
F13[3]	Traditional flange (Cast C-276), ¼–18 NPT, Alloy C-276 drain vents	N/A	★
F14	Traditional flange (Cast Alloy 400), ¼–18 NPT, Alloy 400/ K-500 drain vents	N/A	★
F15[3]	Traditional flange (SST), ¼–18 NPT, Alloy C-276 drain vents	N/A	★
F22	Traditional flange (SST), RC ¼, 316 SST drain vents	N/A	★
F23[3]	Traditional flange (Cast C-276), RC ¼, Alloy C-276 drain vents	N/A	★
F24	Traditional flange (Cast Alloy 400), RC ¼, Alloy 400/K500 drain vents	N/A	★
F25	Traditional flange (SST), RC ¼, Alloy C-276 drain vents	N/A	★
F52	DIN-compliant traditional flange (SST), ¼–18 NPT, 316 drain vents, 7 to 16-in. bolting	N/A	★
G11	Vertical mount level flange (SST), 2-in. ASME Class 150, 316 SST drain vents	G½ A DIN 16288 male (range 1–4 only)	★
G12	Vertical mount level flange (SST), 2-in. ASME Class 300, 316 SST drain vents	N/A	★

Code	Description		
	Coplanar module type	**In-line module type**	
G21	Vertical mount level flange (SST), 3-in. ASME Class 150, 316 SST drain vents	N/A	★
G22	Vertical mount level flange (SST), 3-in. ASME Class 300, 316 SST drain vents	N/A	★
G31	Vertical mount level flange (SST), DIN-DN 50 PN 40, 316 SST drain vents	N/A	★
G41	Vertical mount level flange (SST), DIN-DN 80 PN 40, 316 SST drain vents	N/A	★
P11	N/A	Level flange (SST), 2-in. ASME Class 150	★
P12	N/A	Level flange (SST), 2-in. ASME Class 300	★
P21	N/A	Level flange (SST), 3-in. ASME Class 150	★
P22	N/A	Level flange (SST), 3-in. ASME Class 300	★
P31	N/A	Level flange (SST), DIN-DN 50 PN 40	★
F11	Traditional flange (CS), ¼–18 NPT, 316 SST drain vents	Non-threaded instrument flange (I-Flange)	
F32	Bottom vent traditional flange (SST), ¼–18 NPT, 316 SST drain vents	N/A	
F42	Bottom vent traditional flange (SST), RC ¼, 316 SST drain vents	N/A	
F62	DIN-compliant traditional flange (316 SST), ¼–18 NPT, 316 drain vents, M10 bolting	N/A	
F72	DIN-compliant traditional flange (316 SST), ¼–18 NPT, 316 drain vents, M12 bolting	N/A	

(1) *"Assemble to" items are specified separately and require a completed model number.*
(2) *Consult an Emerson representative for performance specifications.*
(3) *Materials of construction comply with metallurgical requirements highlighted within NACE MR 0175/ISO 15156 for sour oil field production environments. Environmental limits apply to certain materials. Consult latest standard for details. Selected materials also conform to NACE MR 0103 for sour refining environments. Order with Q15 or Q25 to receive a NACE certificate.*

Transmitter output

Code	Description	
A	4–20 mA with digital signal based on HART® protocol	★

Housing style

Code	Description	Material	Conduit entry size	
Housings for ERS primary - configuration type code P				
1A	Plantweb™ housing	Aluminum	½–14 NPT	★
1B	Plantweb housing	Aluminum	M20 x 1.5 (CM 20)	★
1J	Plantweb housing	SST	½–14 NPT	★
1K	Plantweb housing	SST	M20 x 1.5 (CM 20)	★
2E	Junction box with remote display output	Aluminum	½–14 NPT	★
2F	Junction box with remote display output	Aluminum	M20 x 1.5 (CM 20)	★
2M	Junction box with remote display output	SST	½–14 NPT	★

Code	Description	Material	Conduit entry size	
Housings for ERS primary - configuration type code P				
1C	Plantweb housing	Aluminum	G½	
1L	Plantweb housing	SST	G½	
2G	Junction box with remote display output	Aluminum	G½	
Housings for ERS secondary - configuration type code S				
2A	Junction box	Aluminum	½–14 NPT	★
2B	Junction box	Aluminum	M20 x 1.5 (CM 20)	★
2J	Junction box	SST	½–14 NPT	★
2C	Junction box	Aluminum	G½	

Additional options

Extended product warranty

Code	Description	
WR3	3-year limited warranty	★
WR5	5-year limited warranty	★

ERS connection cable

Code	Description	
R02	25 ft. (7.62 m) of ERS cable (gray color)	
R05	50 ft. (15.2 m) of ERS cable (gray color)	★
R10	100 ft. (30.5 m) of ERS cable (gray color)	★
R15	150 ft. (45.72 m) of ERS cable (gray color)	★
R20[(1)]	200 ft. (60.96 m) of ERS cable (gray color)	
R22[(2)]	225 ft. (68.58 m) of ERS cable (gray color)	
R30	300 ft. (91.44 m) of ERS cable (gray color)	
R40	400 ft. (121.92 m) of ERS cable (gray color)	
R50	500 ft. (152.4 m) of ERS cable (gray color)	
H02	25 ft. (7.62 m) of ERS cable (blue color)	
H05	50 ft. (15.2 m) of ERS cable (blue color)	
H10	100 ft. (30.5 m) of ERS cable (blue color)	
H15	150 ft. (45.7 m) of ERS cable (blue color)	
H20[(1)]	200 ft. (60.96 m) of ERS cable (blue color)	
H22[(2)]	225 ft. (68.58 m) of ERS cable (blue color)	
J02	25 ft. (7.62 m) of ERS armored cable	
J05	50 ft. (15.2 m) of ERS armored cable	
J07	75 ft. (22.8 m) of ERS armored cable	
J10	100 ft. (30.5 m) of ERS armored cable	

Code	Description	
J12[2]	125 ft. (38.1 m) of ERS armored cable	

(1) *Maximum cable distance for SIS installations. See Rosemount 3051S ERS Reference Manual for more information.*
(2) *Maximum cable distance for IS (Intrinsically safe) installations. Other options may not be valid at longer distances.*

Mounting bracket

Code	Description	
B1[1]	Traditional flange bracket, CS, 2-in. pipe	★
B2[1]	Traditional flange bracket, CS, panel	★
B3[1]	Traditional flange flat bracket, CS, 2-in. pipe	★
B4	Bracket, all SST, 2-in. pipe and panel	★
B7[1]	Traditional flange bracket, B1 with SST bolts	★
B8[1]	Traditional flange bracket, B2 with SST bolts	★
B9[1]	Traditional flange bracket, B3 with SST bolts	★
BA[1]	Traditional flange bracket, B1, all SST	★
BC[1]	Traditional flange bracket, B3, all SST	★

(1) *Not available with pressure sensor/module codes T or E.*

Special configuration (software)

Code	Description	
C1[1]	Customer software configuration (Configuration Data Sheet must be completed)	★
C3	Gauge pressure calibration on Rosemount 3051SAM A4 only	★
C4[1]	NAMUR alarm and saturation levels, high alarm	★
C5[1]	NAMUR alarm and saturation levels, low alarm	★
C6[1]	Custom alarm and saturation levels, high alarm (requires C1 and Configuration Data Sheet)	★
C7[1]	Custom alarm and saturation levels, low alarm (requires C1 and Configuration Data Sheet)	★
C8[1]	Low alarm (standard Rosemount alarm and saturation levels)	★

(1) *Not available with Configuration Type code S.*

Special configuration (hardware)

Code	Description	
D2[1]	½–14 NPT flange adapters	★
D4[2]	External ground screw assembly	★
D5[1]	Delete transmitter drain/vent valves (install plugs)	★
D7[1]	Coplanar flange without drain/vent ports	
D9[1]	RC ½ flange adapters	

(1) *Not available with Process Connection code A11.*
(2) *This assembly is included with options E1, N1, K1, ND, E4, E7, N7, K7, E2, KA, KC, KD, K2, T1, EP, and KP.*

Product certifications

Code	Description	
E1	ATEX Flameproof	★
I1	ATEX Intrinsic Safety	★
N1	ATEX Type n	★
K1	ATEX Flameproof and Intrinsically Safe, Type n, Dust	★
ND	ATEX Dust	★
E4	Japan Flameproof	★
E5	USA Explosion-proof, Dust Ignition-proof	★
I5	USA Intrinsically Safe, Division 2	★
K5	USA Explosion-proof, Dust Ignition-proof, Intrinsically Safe, Division 2	★
E6(1)	Canada Explosion-proof, Dust Ignition-proof, Division 2	★
I6	Canada Intrinsically Safe	★
K6(1)	Canada Explosion-proof, Dust Ignition-proof, Intrinsically Safe, Division 2	★
E7	IECEx Flameproof	★
I7	IECEx Intrinsic Safety	★
N7	IECEx Type n	★
K7	IECEx Flameproof, Intrinsic Safety, Type n	★
E2	Brazil Flameproof	★
I2	Brazil Intrinsically Safe	★
K2	Brazil Flameproof, Intrinsic Safety, Type n	★
E3	China Flameproof	★
I3	China Intrinsic Safety, Dust Ignition-proof	★
EP	Korea Flameproof	★
IP	Korea Intrinsic Safety	★
KP	Korea Flameproof, Intrinsic Safety	★
EM	Technical Regulations Customs Union (EAC) Flameproof	★
IM	Technical Regulations Customs Union (EAC) Intrinsic Safety	★
KM	Technical Regulations Customs Union (EAC) Flameproof, Intrinsic Safety	★
KA(1)	ATEX and Canada Flameproof, Intrinsically Safe, Division 2	★
KB(1)	USA and Canada Explosion-proof, Dust Ignition-proof, Intrinsically Safe, Division 2	★
KC	USA and ATEX Explosion-proof, Intrinsically Safe, Division 2	★
KD(1)	USA, Canada, and ATEX Explosion-proof, Intrinsically Safe	★

(1) *Not available with M20 or G½ conduit entry size.*

Shipboard approvals

Code	Description	
SBS	American Bureau of Shipping (ABS) Type Approval	★
SBV	Bureau Veritas (BV) Type Approval	★

Code	Description	
SDN	Det Norske Veritas (DNV) Type Approval	★
SLL	Lloyds Register (LR) Type Approval	★

Calibration certification

Code	Description	
Q4	Calibration certificate	★
QP	Calibration certificate and tamper evident seal	★

Material traceability certification

Code	Description	
Q8	Material traceability certification per EN 10204 3.1	★

Quality certification for safety

Code	Description	
QT	Safety certified to IEC 61508 with certificate of FMEDA data	★

Surface finish certification

Code	Description	
Q16	Surface finish certification for hygienic remote seals	★

Seal system performance reports

The QZ report quantifies the performance of the entire ERS system. One report is provided per ERS system. The QZ option is specified on the primary transmitter (configuration type code P).

Code	Description	
QZ	Remote seal system performance calculation report	★

Terminal blocks

This is not available with configuration type code S.

Code	Description	
T1	Transient terminal block	★

Sensor fill fluid

Silicone fill fluid is standard.

Code	Description	
L1	Inert sensor fill fluid	★

O-ring

Code	Description	
L2	Graphite-filled PTFE O-ring	★

Bolting material

Code	Description	
L4	Austenitic 316 SST bolts	★
L5(1)	ASTM A 193, Grade B7M bolts	★
L6	Alloy K-500 bolts	★
L7(1)	ASTM A 453, Class D, Grade 660 bolts	★
L8	ASTM A 193, Class 2, Grade B8M bolts	★

(1) *Materials of construction comply with metallurgical requirements highlighted within NACE MR 0175/ISO 15156 for sour oil field production environments. Environmental limits apply to certain materials. Consult latest standard for details. Selected materials also conform to NACE MR 0103 for sour refining environments. Order with Q15 or Q25 to receive a NACE certificate.*

Display type (ERS primary only)

This is not available with configuration type code S.

Code	Description	
M5	Plantweb™ LCD display	★
M7(1)	Remote mount LCD display and interface, Plantweb housing, no cable, SST bracket	★
M8	Remote mount LCD display and interface, Plantweb housing, 50 ft. (15.2 m) cable, SST bracket	★
M9	Remote mount LCD display and interface, Plantweb housing, 100 ft. (30.5 m) cable, SST bracket	★

(1) *See the Rosemount 3051S Reference Manual for cable requirements. Contact an Emerson representative for additional information.*

Pressure testing

Code	Description	
P1	Hydrostatic testing with certificate	

Special cleaning

This is not available with process connection code A11.

Code	Description	
P2	Cleaning for special services	
P3	Cleaning for less than 1 PPM Chlorine/Fluorine	

NACE certificate

Materials of construction comply with metallurgical requirements highlighted within NACE® MR 0175/ISO 15156 for sour oil field production environments.

Environmental limits apply to certain materials. Consult latest standard for details.

Selected materials also conform to NACE MR 0103 for sour refining environments.

Order with Q15 or Q25 to receive a NACE certificate.

Code	Description	
Q15	Certificate of compliance to NACE MR0175/ISO 15156 for wetted materials	★
Q25	Certificate of compliance to NACE MR0103 for wetted materials	

Positive Material Identification (PMI)

Code	Description	
Q76	PMI Verification and Certificate	★

Rosemount 3051SAL Transmitter for ERS Applications



- Integrated transmitter and direct mount seal in a single model number
- Variety of process connections including flanged, threaded, and hygienic remote seals
- Available with 15-year limited warranty

Specification and selection of product materials, options, or components must be made by the purchaser of the equipment.

A Rosemount 3051SAL Scalable ERS Level Transmitter consists of three parts. First, specify the transmitter model codes found below. Finish the model number by specifying all desired options from the Additional Options section.

Required model components

Model

Code	Transmitter type	
3051SAL	Scalable level transmitter	★

Performance class

The Rosemount 3051S ERS System offer three performance class options; Classic, Ultra, and Enhanced ERS system performance. The Classic and Ultra performance classes are suited to lower static pressure and stable temperature conditions. The Enhanced ERS system performance class provides better performance across temperature (–40 to 185 °F) with improved performance at higher static pressure.

Code	Description	
1	Ultra: 0.055% span accuracy, 150:1 rangedown, 15-year limited warranty	★
2	Classic: 0.065% span accuracy, 150:1 rangedown	★
4	Enhanced ERS system performance, 15-year limited warranty	★

Configuration type

Code	Description	
P	ERS - primary	★
S	ERS - secondary	★

Pressure type

Code	Description		
	Module	**Sensor**	
G	Coplanar	Gauge	★
T	In-Line	Gauge	★
E	In-Line	Absolute	★
A	Coplanar	Absolute	

Pressure range

The pressure range should be specified based on the maximum static pressure, not differential pressure.

Code	Description				
	Coplanar gauge	**In-line gauge**	**In-line absolute**	**Coplanar absolute**	
1A	N/A	–14.7 to 30 psig (–1.01 to 2.06 bar)	0 to 30 psia (0 to 2.06 bar)	0 to 30 psia (0 to 2.06 bar)	★
2A	–250 to 250 inH_2O (–621.60 to 621.60 mbar)	–14.7 to 150 psig (–1.01 to 10.34 bar)	0 to 150 psia (0 to 10.34 bar)	0 to 150 psia (0 to 10.34 bar)	★
3A	–393 to 1000 inH_2O (–0.97 to 2.48 bar)	–14.7 to 800 psig (–1.01 to 55.15 bar)	0 to 800 psia (0 to 55.15 bar)	0 to 800 psia (0 to 55.15 bar)	★
4A	–14.2 to 300 psig (–0.97 to 20.68 bar)	–14.7 to 4000 psig (–1.01 to 275.79 bar)	0 to 4000 psia (0 to 275.79 bar)	0 to 4000 psia (0 to 275.79 bar)	★
5A	–14.2 to 2000 psig (–0.97 to 137.89 bar)	–14.7 to 10000 psig (–1.01 to 689.47 bar)	0 to 10000 psia (0 to 689.47 bar)	N/A	★

Transmitter output

Code	Description	
A	4–20 mA with digital signal based on HART® protocol	★

Housing style

Code	Description	Material	Conduit entry size	
Housings for ERS primary - configuration type code P				
1A	Plantweb™ housing	Aluminum	½–14 NPT	★
1B	Plantweb housing	Aluminum	M20 x 1.5 (CM 20)	★
1J	Plantweb housing	SST	½–14 NPT	★
1K	Plantweb housing	SST	M20 x 1.5 (CM 20)	★
2E	Junction box with remote display output	Aluminum	½–14 NPT	★
2F	Junction box with remote display output	Aluminum	M20 x 1.5 (CM 20)	★
2M	Junction box with remote display output	SST	½–14 NPT	★
1C	Plantweb housing	Aluminum	G½	
1L	Plantweb housing	SST	G½	

Code	Description	Material	Conduit entry size	
Housings for ERS primary - configuration type code P				
2G	Junction box with remote display output	Aluminum	G½	
Housings for ERS secondary - configuration type code S				
2A	Junction box	Aluminum	½–14 NPT	★
2B	Junction box	Aluminum	M20 x 1.5 (CM 20)	★
2J	Junction box	SST	½–14 NPT	★
2C	Junction box	Aluminum	G½	

Seal system type

See Seal system type in Rosemount DP Level Product Data Sheet for more detail.

Code	Description		
Coplanar pressure module type			
1	Single direct mount seal system	Welded-repairable	★
2	Single direct mount seal system	All welded	★
In-line pressure module type			
1	Single direct mount seal system	All welded	★

High side connection type

Code	Description	
Single direct mount seal system (between transmitter and remote seal)		
0	No extension	★
2	2-in. (50 mm) extension	★
4	4-in. (100 mm) extension	★
5(1)	Thermal Optimizer	★
6(2)	Thermal Range Expander - Silicone 200 secondary fill fluid	★
7(2)(3)	Thermal Range Expander - SYLTHERM™ XLT secondary fill fluid	★
8(2)	Thermal Range Expander - Tri-Therm 300 secondary fill fluid	

(1) *Maximum working pressure (MWP) of the Thermal Optimizer is 4000 psi (275 bar).*
(2) *Maximum working pressure (MWP) of the Thermal Range Expander is 3750 psi (258.6 bar).*
(3) *Thermal Range Expander with SYLTHERM XLT secondary fill fluid is not recommended for use in vacuum applications below 6 psia (400 mbar-a).*

Low side connection type (reference pressure connection)

Code	Low side connection type (reference pressure connection)	
Single direct mount seal system		
00	None (In-line style sensor)	★
20	316L SST isolator/SST transmitter flange	★
30	Alloy C-276 isolator/SST transmitter flange	★

Seal fill fluid

Code	Description	Specific gravity at 77 °F (25 °C)	Temperature limits[1][2]				
			No extension	2-in. (50 mm) extension	4-in. (100 mm) extension	Thermal Range Expander[3]	
D	Silicone 200	0.934	–49 to 401 °F (–45 to 205 °C)			N/A	★
F	Silicone 200 for vacuum applications	0.934	For use in vacuum applications below 14.7 psia (1 bar-a), refer to vapor pressure curves in Rosemount DP Level Fill Fluid Specification Technical Note.				★
J[4]	Tri-Therm 300	0.795	–40 to 401 °F (–40 to 205 °C)	–40 to 464 °F (–40 to 240 °C)	–40 to 572 °F (–40 to 300 °C)	N/A	★
Q[4]	Tri-Therm 300 for vacuum applications	0.795	For use in vacuum applications below 14.7 psia (1 bar-a), refer to vapor pressure curves in Rosemount DP Level Fill Fluid Specification Technical Note.				★
L	Silicone 704	1.07	32 to 401 °F (0 to 205 °C)	32 to 464 °F (0 to 240 °C)	32 to 572 °F (0 to 300 °C)	Up to 599 °F (315 °C)	★
C	Silicone 704 for vacuum applications	1.07	For use in vacuum applications below 14.7 psia (1 bar-a), refer to vapor pressure curves in Rosemount DP Level Fill Fluid Specification Technical Note.				★
R	Silicone 705	1.09	68 to 401 °F (20 to 205 °C)	68 to 464 °F (20 to 240 °C)	68 to 572 °F (20 to 300 °C)	Up to 698 °F (370 °C)	★
V	Silicone 705 for vacuum applications	1.09	For use in vacuum applications below 14.7 psia (1 bar-a), refer to vapor pressure curves in Rosemount DP Level Fill Fluid Specification Technical Note.				★
A[5]	SYLTHERM™ XLT	0.85	–157 to 293 °F (–105 to 145 °C)			N/A	★
H[5]	Inert (Halocarbon)	1.85	–49 to 320 °F (–45 to 160 °C)			N/A	★
G[4][6]	Glycerin and water	1.13	5 to 203 °F (–15 to 95 °C)			N/A	★
N[4][5]	Neobee® M-20	0.94	5 to 401 °F (–15 to 205 °C)	5 to 437 °F (–15 to 225 °C)		N/A	★
P[4][6]	Propylene glycol and water	1.02	5 to 203 °F (–15 to 95 °C)			N/A	★
Y[7]	UltraTherm™ 805	1.20	N/A			Up to 770 °F (410 °C)[8]	★
Z[7]	UltraTherm 805 for vacuum applications	1.20	For use in vacuum applications below 14.7 psia (1 bar-a), refer to vapor pressure curves in Rosemount DP Level Fill Fluid Specification Technical Note.				★
Continue specifying a completed model number by choosing a remote Seal style:							

(1) *At ambient pressure of 14.7 psia (1 bar-a) and ambient temperature of 70 °F (21 °C). Temperature limits are reduced in vacuum service and may be limited by seal selection.*
(2) *Due to heat transfer to the transmitter, the maximum process temperature of the transmitter will be de-rated if ambient or process temperatures exceed 185 °F (85 °C). Consult Instrument Toolkit™ to verify the application.*
(3) *For complete process and ambient temperature limits, see Thermal Range Expander temperature operating range.*
(4) *This is a food grade fill fluid.*
(5) *For use in vacuum applications below 14.7 psia (1 bar-a), refer to vapor pressure curves in Rosemount DP Level Fill Fluid Specification Technical Note.*
(6) *Not suitable for vacuum applications.*
(7) *Only available with Thermal Range Expander.*
(8) *UltraTherm 805 supports maximum design temperature of 850 °F (454 °C). Design temperature rating is for non-continuous use with a cumulative exposure time less of than 12 hours.*

Seal style

Seal type	Model	Process connection
	Flush Flanged (FF) Seal	2-in./DN 50/50A 3-in./DN 80/80A 4-in/DN 100/100A
	Extended Flanged (EF) Seal	3-in./DN 80/80A 4-in./DN 100/100A
	Remote Flanged (RF) Seal	½-in. ¾-in. 1-in./DN 25/25A 1½-in./DN 40/40A
	PF Pancake Seal	2-in./DN 50/50A 3-in./DN 80/80A
	FC Flush Flanged Seal - Ring Type Joint (RTJ) gasket surface	2-in. 3-in.
	RC Remote Flanged Seal - Ring Type Joint (RTJ) gasket surface	½-in. ¾-in. 1-in. 1½-in.
	Remote Threaded (RT) Seal	¼ –18 NPT ½ –14 NPT ¾ –14 NPT 1–11.5 NPT 1¼–11.5 NPT
	SC Hygienic Tri-Clamp® Seal	1½-in. 2-in. 3-in.
	SS Hygienic Tank Spud Seal	4-in.

Additional options

Extended product warranty

Code	Description	
WR3	3-year limited warranty	★
WR5	5-year limited warranty	★

ERS connection cable

The pressure range should be specified based on the maximum static pressure, not differential pressure.

Code	Description	
R02	25 ft. (7.62 m) of ERS cable (gray color)	
R05	50 ft. (15.2 m) of ERS cable (gray color)	★
R10	100 ft. (30.5 m) of ERS cable (gray color)	★
R15	150 ft. (45.72 m) of ERS cable (gray color)	★
R20(1)	200 ft. (60.96 m) of ERS cable (gray color)	
R22(2)	225 ft. (68.58 m) of ERS cable (gray color)	
R30	300 ft. (91.44 m) of ERS cable (gray color)	
R40	400 ft. (121.92 m) of ERS cable (gray color)	
R50	500 ft. (152.4 m) of ERS cable (gray color)	
H02	25 ft. (7.62 m) of ERS cable (blue color)	
H05	50 ft. (15.2 m) of ERS cable (blue color)	
H10	100 ft. (30.5 m) of ERS cable (blue color)	
H15	150 ft. (45.7 m) of ERS cable (blue color)	
H20(1)	200 ft. (60.96 m) of ERS cable (blue color)	
H22(1)	225 ft. (68.58 m) of ERS cable (blue color)	
J02	25 ft. (7.62 m) of armored ERS cable	
J05	50 ft. (15.2 m) of armored ERS cable	
J07	75 ft. (22.8 m) of armored ERS cable	
J10	100 ft. (30.5 m) of armored ERS cable	
J12(2)	125 ft. (38.1 m) of armored ERS cable	

(1) *Maximum cable distance for SIS installations. See "Safety Instrumented Systems (SIS) Certification" section of Rosemount 3051S ERS Reference Manual for more information.*
(2) *Maximum cable distance for IS (Intrinsically safe) installations. Other options may not be valid at longer distances.*

Software configuration

This is not available with configuration type code S.

Code	Description	
C1	Custom software configuration (requires Configuration Data Sheet)	★

Gauge pressure calibration

Code	Description	
C3	Gauge pressure calibration on Rosemount 3051SAL A4 only	★

Alarm limit

This is not available with configuration type code S.

Code	Description	
C4	NAMUR alarm and saturation levels, high alarm	★

Code	Description	
C5	NAMUR alarm and saturation levels, low alarm	★
C6	Custom alarm and saturation levels, high alarm (requires C1 and Configuration Data Sheet)	★
C7	Custom alarm and saturation levels, low alarm (requires C1 and Configuration Data Sheet)	★
C8	Low alarm (standard Rosemount alarm and saturation levels)	★

Ground screw

This assembly is included with options EP, KP, E1, N1, K1, ND, E4, E7, N7, K7, E2, KA, KC, KD, K2, T1, E3, EM, KM.

Code	Description	
D4	External ground screw assembly	★

Conduit plug

Code	Description	
DO	316 SST conduit plug	★

Product certifications

Code	Description	
E1	ATEX Flameproof	★
I1	ATEX Intrinsic Safety	★
N1	ATEX Type n	★
K1	ATEX Flameproof and Intrinsically Safe, Type n, Dust	★
ND	ATEX Dust	★
E4	Japan Flameproof	★
E5	USA Explosion-proof, Dust Ignition-proof	★
I5	USA Intrinsically Safe, Division 2	★
K5	USA Explosion-proof, Dust Ignition-proof, Intrinsically Safe, Division 2	★
E6[(1)]	Canada Explosion-proof, Dust Ignition-proof, Division 2	★
I6	Canada Intrinsically Safe	★
K6[(1)]	Canada Explosion-proof, Dust Ignition-proof, Intrinsically Safe, Division 2	★
E7	IECEx Flameproof	★
I7	IECEx Intrinsic Safety	★
N7	IECEx Type n	★
K7	IECEx Flameproof, Intrinsic Safety, Type n	★
E2	Brazil Flameproof	★
I2	Brazil Intrinsically Safe	★
K2	Brazil Flameproof, Intrinsic Safety, Type n	★
E3	China Flameproof	★
I3	China Intrinsic Safety, Dust Ignition-proof	★

Code	Description	
EP	Korea Flameproof	★
IP	Korea Intrinsic Safety	★
KP	Korea Flameproof, Intrinsic Safety	★
EM	Technical Regulations Customs Union (EAC) Flameproof	★
IM	Technical Regulations Customs Union (EAC) Intrinsic Safety	★
KM	Technical Regulations Customs Union (EAC) Flameproof, Intrinsic Safety	★
KA(1)	ATEX and Canada Flameproof, Intrinsically Safe, Division 2	★
KB(1)	USA and Canada Explosion-proof, Dust Ignition-proof, Intrinsically Safe, Division 2	★
KC	USA and ATEX Explosion-proof, Intrinsically Safe, Division 2	★
KD(1)	USA, Canada, and ATEX Explosion-proof, Intrinsically Safe	★

(1) *Not available with M20 or G½ conduit entry size.*

Shipboard approvals

Code	Description	
SBS	American Bureau of Shipping (ABS) Type Approval	★
SBV	Bureau Veritas (BV) Type Approval	★
SDN	Det Norske Veritas (DNV) Type Approval	★
SLL	Lloyds Register (LR) Type Approval	★

Sensor fill fluid

Silicone fill fluid is standard.

Code	Description	
L1	Inert sensor fill fluid	★

O-ring

Code	Description	
L2	Graphite-filled PTFE O-ring	★

Bolting material

Code	Description	
L4	Austenitic 316 SST bolts	★

Display type (ERS primary only)

This is not available with configuration type code S.

Code	Description	
M5	Plantweb™ LCD display	★
M7(1)	Remote mount LCD display and interface, Plantweb housing, no cable, SST bracket	★

Code	Description	
M8	Remote mount LCD display and interface, Plantweb housing, 50 ft. (15.2 m) cable, SST bracket	★
M9	Remote mount LCD display and interface, Plantweb housing, 100 ft. (30.5 m) cable, SST bracket	★

(1) *See the Rosemount 3051S Reference Manual for cable requirements. Contact an Emerson representative for additional information.*

Pressure testing

Code	Description	
P1	Hydrostatic testing with certificate	

Special cleaning

This is not available with process connection code A11.

Code	Description	
P2	Cleaning for special services	
P3	Cleaning for less than 1 PPM Chlorine/Fluorine	

Calibration certification

Code	Description	
Q4	Calibration certificate	★
QP	Calibration certificate and tamper evident seal	★

Material traceability certification

Code	Description	
Q8	Material traceability certification per EN 10204 3.1	★

Quality certification for safety

Code	Description	
QT	Safety certified to IEC 61508 with certificate of FMEDA data	★

Seal system performance reports

The QZ report quantifies the performance of the entire ERS system. One report is provided per ERS system. The QZ option is specified on the primary transmitter (configuration type code P).

Code	Description	
QZ	Remote seal system performance calculation report	★

Transient protection

This is not available with configuration type code S.

Code	Description	
T1	Transient terminal block	★

NACE certificate

Materials of construction comply with metallurgical requirements highlighted within NACE MR 0175/ISO 15156 for sour oil field production environments. Environmental limits apply to certain materials. Consult latest standard for details. Selected materials also conform to NACE MR 0103 for sour refining environments. UltraTherm 805 supports maximum design temperature of 850 °F (454 °C). Design temperature rating is for non-continuous use with a cumulative exposure time less of than 12 hours.

Code	Description	
Q15	Certificate of compliance to NACE MR0175/ISO 15156 for wetted materials	★
Q25	Certificate of compliance to NACE MR0103 for wetted materials	★

Rosemount 3051S Scalable™ Level Transmitter

Rosemount 3051S Scalable Level Transmitters combine the features and benefits of a high-performance Rosemount 3051S with the durability and reliability of diaphragm seals all in a single model number.



Rosemount 3051SAL In-line with “FF” Flanged Seal



Rosemount 3051SAL Coplanar with “SS” Hygienic Tank Spud Seal



Rosemount 3051SAL Tuned-System™ Assembly with Thermal Range Expander



Rosemount 3051SAL Balanced System

Product features and capabilities include:

- Variety of process connections including flanged, threaded, and hygienic seals
- Quantified performance for the entire transmitter/seal assembly (QZ option)
- HART®, FOUNDATION™ Fieldbus, and wireless protocols

CONFIGURE > VIEW PRODUCT >

Rosemount 3051SAL Scalable Level Transmitter

Specification and selection of product materials, options, or components must be made by the purchaser of the equipment.

A Rosemount 3051SAL Scalable ERS Level Transmitter consists of three parts. First, specify the transmitter model codes found below. Then, specify a direct mount seal found here: Diaphragm seals for Rosemount 3051SAL. Finish the model number by specifying all desired options from the Additional Options section.

Online product configurator

Many products are configurable online using our Product Configurator. Select the **Configure** button above or visit our website to start. With this tool's built-in logic and continuous validation, you can configure your products more quickly and accurately.

Specifications and options

See the Specifications and options section for more details on each configuration. Specification and selection of product materials, options, or components must be made by the purchaser of the equipment. See the Material selection section for more information.

Sizing and Selection Body

All Rosemount flow meters can be sized to meet your application specific requirements in the DP Flow sizing and selection tool. This tool will verify if a selected product meets your application requirements, provide a comparison between different primary elements, and generate a detailed accuracy comparison graph.

Once a sizing is completed, the configuration tool will help create a complete and valid model code to match your requirements and include any additional options or approvals.

Optimizing lead time

The starred offerings (★) represent the most common options and should be selected for the fastest delivery times. The non-starred offerings are subject to additional delivery lead time.

Required model components

Model

Code	Transmitter type	
3051SAL	Scalable level transmitter	★

Performance class

Code	Description	
1	Ultra: 0.055% span accuracy, 150:1 rangedown, 15-year limited warranty	★
2	Classic: 0.065% span accuracy, 150:1 rangedown	★

Configuration type

Code	Description	
C	Liquid level transmitter	★

Pressure module type

Code	Module type	Sensor type	
D	Coplanar	Differential	★
G	Coplanar	Gauge	★
T	In-line	Gauge	★
E	In-line	Absolute	★
A	Coplanar	Absolute	

Pressure range

Code	Coplanar DP	Coplanar Gauge	In-line Gauge	In-line Absolute	Coplanar Absolute	
1A	N/A	N/A	–14.7 to 30 psig (–1.01 to 2.06 bar)	0 to 30 psia (0 to 2.06 bar)	0 to 30 psia (0 to 2.06 bar)	★
2A	–250 to 250 inH_2O (–621.60 to 621.60 mbar)	–250 to 250 inH_2O (–621.60 to 621.60 mbar)	–14.7 to 150 psig (–1.01 to 10.34 bar)	0 to 150 psia (0 to 10.34 bar)	0 to 150 psia (0 to 10.34 bar)	★
3A	–1000 to 1000 inH_2O (–2.48 to 2.48 bar)	–393 to 1000 inH_2O (–0.97 to 2.48 bar)	–14.7 to 800 psig (–1.01 to 55.15 bar)	0 to 800 psia (0 to 55.15 bar)	0 to 800 psia (0 to 55.15 bar)	★
4A	–300 to 300 psi (–20.68 to 20.68 bar)	–14.2 to 300 psig (–0.97 to 20.68 bar)	–14.7 to 4000 psig (–1.01 to 275.79 bar)	0 to 4000 psia (0 to 275.79 bar)	0 to 4000 psia (0 to 275.79 bar)	★
5A	–2000 to 2000 psi (–137.89 to 137.89 bar)	–14.2 to 2000 psig (–0.97 to 137.89 bar)	–14.7 to 10000 psig (–1.01 to 689.47 bar)	0 to 10000 psia (0 to 689.47 bar)	N/A	★

Transmitter output

Code	Description	
A	4–20 mA with digital signal based on HART® protocol	★
F(1)	FOUNDATION™ Fieldbus protocol	★

(1) *Requires Plantweb™ housing.*

Housing style

Code	Description	Material	Conduit entry size	
Housings for ERS primary - configuration type code P				
1A	Plantweb™ housing	Aluminum	½–14 NPT	★
1B	Plantweb housing	Aluminum	M20 x 1.5 (CM 20)	★
1J	Plantweb housing	SST	½–14 NPT	★
1K	Plantweb housing	SST	M20 x 1.5 (CM 20)	★
2E	Junction box with remote display output	Aluminum	½–14 NPT	★
2F	Junction box with remote display output	Aluminum	M20 x 1.5 (CM 20)	★
2M	Junction box with remote display output	SST	½–14 NPT	★
1C	Plantweb housing	Aluminum	G½	
1L	Plantweb housing	SST	G½	
2G	Junction box with remote display output	Aluminum	G½	
Housings for ERS secondary - configuration type code S				
2A	Junction box	Aluminum	½–14 NPT	★
2B	Junction box	Aluminum	M20 x 1.5 (CM 20)	★
2J	Junction box	SST	½–14 NPT	★
2C	Junction box	Aluminum	G½	

Seal system type

Code	Coplanar pressure module type		In-line pressure module type		
1	Direct mount single seal system	Welded-repairable	Direct mount single seal system	All welded	★
2	Direct mount single seal system	All welded	N/A	N/A	★
3	Tuned-system assembly - one direct mount and one remote mount seal with capillary	Welded-repairable	N/A	N/A	★
4	Tuned-system assembly - one direct mount and one remote mount seal with capillary	All welded	N/A	N/A	★
5	Balanced system - two remote mount seals with equal lengths of capillary	Welded-repairable	N/A	N/A	★
B	Balanced system - two remote mount seals with equal lengths of capillary	All welded	N/A	N/A	★
7	Remote mount single seal system with capillary - 316L low side transmitter isolator	Welded-repairable	Remote mount single seal system with capillary	All welded	★
C	Remote mount single seal system with capillary - 316L low side transmitter isolator	All welded	N/A	N/A	★
9	Remote mount single seal system with capillary - Alloy C-276 low side transmitter isolator	Welded-repairable	N/A	N/A	★
D	Remote mount single seal system with capillary - Alloy C-276 low side transmitter isolator	All welded	N/A	N/A	★

High side connection type (select based on seal system type chosen)

Code	Single seal system				Dual seal system		
	Direct mount		Remote mount with capillary		Tuned-system assembly	Balanced system	
	Coplanar	In-line	Coplanar	In-line	Coplanar	Coplanar	
0	No extension		Standard	Standard	No extension/Standard	Standard	★
2	2-in. (50 mm) extension	N/A	N/A	N/A	2-in. (50 mm) extension		★
4	4-in. (100 mm) extension	4-in. (100 mm) extension(1)	N/A	N/A	4-in. (100 mm) extension	N/A	★
5	N/A	Thermal optimizer	N/A	N/A	N/A	N/A	★
6(2)	Thermal Range Expander - Silicone 200 secondary fill		Thermal Range Expander - Silicone 200 secondary fill fluid single capillary		Thermal Range Expander - Silicone 200 secondary fill with low side capillary		★
7(2)	Thermal Range Expander - SYLTHERM XLT secondary fill fluid		Thermal Range Expander - SYLTHERM XLT secondary fill fluid single capillary		Thermal Range Expander - SYLTHERM XLT secondary fill with low side capillary		★
8(2)	Thermal Range Expander - Tri-Therm 300 secondary fill fluid		Tri-Therm 300 secondary fill fluid single capillary		Tri-Therm 300 secondary fill fluid with low side capillary		

(1) *Maximum working pressure is 4000 psi (275 bar).*

(2) *Maximum working pressure (MWP) of the Thermal Range Expander is 3750 psi (258.6 bar).*

Low side connection type or capillary I.D.

Code	Material for low side reference connection		Capillary I.D.			
	Direct mount		Remote mount with capillary	Tuned-system assembly	Balanced system	
	Coplanar	In-line	Coplanar or In-line	Coplanar	Coplanar	
0	N/A	No reference connection	N/A	N/A	N/A	★
1(1)(2)	Assemble to one Rosemount remote seal	N/A	N/A	N/A	N/A	★
2	316L SST isolator and SST transmitter flange	N/A	N/A	N/A	N/A	★
3	Alloy C-276 isolator and SST transmitter flange	N/A	N/A	N/A	N/A	★
B	N/A	N/A	0.03-in. (0.711 mm) ID capillary	0.03-in. (0.711 mm) ID capillary	0.03-in. (0.711 mm) ID capillary	★
C	N/A	N/A	0.04-in. (1.092 mm) ID capillary	0.04-in. (1.092 mm) ID capillary	0.04-in. (1.092 mm) ID capillary	★
D	N/A	N/A	0.075-in. (1.905 mm) ID capillary	0.075-in. (1.905 mm) ID capillary	0.075-in. (1.905 mm) ID capillary	★
E(3)	N/A	N/A	0.03-in. (0.711 mm) ID capillary, PVC coated with closed end	0.03-in. (0.711 mm) ID capillary, PVC coated with closed end	0.03-in. (0.711 mm) ID capillary, PVC coated with closed end	★
F	N/A	N/A	0.04-in. (1.092 mm) ID capillary, PVC coated with closed end	0.04-in. (1.092 mm) ID capillary, PVC coated with closed end	0.04-in. (1.092 mm) ID capillary, PVC coated with closed end	★
G	N/A	N/A	0.075-in. (1.905 mm) ID capillary, PVC coated with closed end	0.075-in. (1.905 mm) ID capillary, PVC coated with closed end	0.075-in. (1.905 mm) ID capillary, PVC coated with closed end	★

(1) *Requires separate Rosemount 1199 or 1299 model number to be selected. With option code 1, user must select Seal Location Option code M (low side of transmitter) in the Rosemount Remote Mount Seal System Model.*
(2) *Not suitable for vacuum applications.*
(3) *PVC coating should not be exposed to temperatures above 212 °F (100 °C) to avoid possibility of thermal breakdown.*

Capillary length

Capillary length applies to both high and low side for balanced systems. Applies to low side only for tuned-system assemblies. Applies to high side only for remote mount single seal systems with capillary.

Code	Description	
0	No capillary (required for direct mount single seal system)	★
A	1 ft. (0.3 m)	★
B	5 ft. (1.5 m)	★
C	10 ft. (3.0 m)	★
D	15 ft. (4.5 m)	★
E	20 ft. (6.1 m)	★
F	25 ft. (7.6 m)	★
G	30 ft. (9.1 m)	★
H	35 ft. (10.7 m)	★
J	40 ft. (12.2 m)	★
K	45 ft. (13.7 m)	★
L	50 ft. (15.2 m)	★
M	1.6 ft. (0.5 m)	★
N	3.3 ft. (1.0 m)	★
P	4.9 ft. (1.5 m)	★
R	6.6 ft. (2.0 m)	★
T	8.2 ft. (2.5 m)	★
U	9.8 ft. (3.0 m)	★
V	11.5 ft. (3.5 m)	★
W	13.1 ft. (4.0 m)	★
Y	16.4 ft. (5.0 m)	★
Z	19.7 ft. (6.0 m)	★
1	23 ft. (7.0 m)	★
2	26.2 ft. (8.0 m)	★
3	29.5 ft. (9.0 m)	★
4	32.8 ft. (10.0 m)	★
5	36.1 ft. (11.0 m)	★
6	39.4 ft. (12.0 m)	★
7	42.6 ft. (13.0 m)	★
8	45.9 ft. (14.0 m)	★
9	49.2 ft. (15.0 m)	★

Seal fill fluid

Code	Description	Specific gravity at 77 °F (25 °C)	Temperature limits[1][2]				
			No extension	2-in. (50 mm) extension	4-in. (100 mm) extension	Thermal Range Expander[3]	
D	Silicone 200	0.934	–49 to 401 °F (–45 to 205 °C)			N/A	★
F	Silicone 200 for vacuum applications	0.934	For use in vacuum applications below 14.7 psia (1 bar-a), refer to vapor pressure curves in Rosemount DP Level Fill Fluid Specification Technical Note.				★
J[4]	Tri-Therm 300	0.795	–40 to 401 °F (–40 to 205 °C)	–40 to 464 °F (–40 to 240 °C)	–40 to 572 °F (–40 to 300 °C)	N/A	★
Q[4]	Tri-Therm 300 for vacuum applications	0.795	For use in vacuum applications below 14.7 psia (1 bar-a), refer to vapor pressure curves in Rosemount DP Level Fill Fluid Specification Technical Note.				★
L	Silicone 704	1.07	32 to 401 °F (0 to 205 °C)	32 to 464 °F (0 to 240 °C)	32 to 572 °F (0 to 300 °C)	Up to 599 °F (315 °C)	★
C	Silicone 704 for vacuum applications	1.07	For use in vacuum applications below 14.7 psia (1 bar-a), refer to vapor pressure curves in Rosemount DP Level Fill Fluid Specification Technical Note.				★
R	Silicone 705	1.09	68 to 401 °F (20 to 205 °C)	68 to 464 °F (20 to 240 °C)	68 to 572 °F (20 to 300 °C)	Up to 698 °F (370 °C)	★
V	Silicone 705 for vacuum applications	1.09	For use in vacuum applications below 14.7 psia (1 bar-a), refer to vapor pressure curves in Rosemount DP Level Fill Fluid Specification Technical Note.				★
A[5]	SYLTHERM™ XLT	0.85	–157 to 293 °F (–105 to 145 °C)			N/A	★
H[5]	Inert (Halocarbon)	1.85	–49 to 320 °F (–45 to 160 °C)			N/A	★
G[4][6]	Glycerin and water	1.13	5 to 203 °F (–15 to 95 °C)			N/A	★
N[4][5]	Neobee® M-20	0.94	5 to 401 °F (–15 to 205 °C)	5 to 437 °F (–15 to 225 °C)		N/A	★
P[4][6]	Propylene glycol and water	1.02	5 to 203 °F (–15 to 95 °C)			N/A	★
Y[7]	UltraTherm™ 805	1.20	N/A			Up to 770 °F (410 °C)[8]	★
Z[7]	UltraTherm 805 for vacuum applications	1.20	For use in vacuum applications below 14.7 psia (1 bar-a), refer to vapor pressure curves in Rosemount DP Level Fill Fluid Specification Technical Note.				★
Continue specifying a completed model number by choosing a remote Seal style:							

(1) *At ambient pressure of 14.7 psia (1 bar-a) and ambient temperature of 70 °F (21 °C). Temperature limits are reduced in vacuum service and may be limited by seal selection.*
(2) *Due to heat transfer to the transmitter, the maximum process temperature of the transmitter will be de-rated if ambient or process temperatures exceed 185 °F (85 °C). Consult Instrument Toolkit™ to verify the application.*
(3) *For complete process and ambient temperature limits, see Thermal Range Expander temperature operating range.*
(4) *This is a food grade fill fluid.*
(5) *For use in vacuum applications below 14.7 psia (1 bar-a), refer to vapor pressure curves in Rosemount DP Level Fill Fluid Specification Technical Note.*
(6) *Not suitable for vacuum applications.*
(7) *Only available with Thermal Range Expander.*
(8) *UltraTherm 805 supports maximum design temperature of 850 °F (454 °C). Design temperature rating is for non-continuous use with a cumulative exposure time less of than 12 hours.*

Seal style

Seal type	Model	Process connection
	Flush Flanged (FF) Seal	2-in./DN 50/50A 3-in./DN 80/80A 4-in/DN 100/100A
	Extended Flanged (EF) Seal	3-in./DN 80/80A 4-in./DN 100/100A
	Remote Flanged (RF) Seal	½-in. ¾-in. 1-in./DN 25/25A 1½-in./DN 40/40A
	PF Pancake Seal	2-in./DN 50/50A 3-in./DN 80/80A
	FC Flush Flanged Seal - Ring Type Joint (RTJ) gasket surface	2-in. 3-in.
	RC Remote Flanged Seal - Ring Type Joint (RTJ) gasket surface	½-in. ¾-in. 1-in. 1½-in.
	Remote Threaded (RT) Seal	¼ –18 NPT ½ –14 NPT ¾ –14 NPT 1–11.5 NPT 1¼–11.5 NPT
	SC Hygienic Tri-Clamp® Seal	1½-in. 2-in. 3-in.
	SS Hygienic Tank Spud Seal	4-in.

Wireless options

Update rate

This is only available with output code X.

Code	Description	
WA	User configurable update rate	★

Operating frequency and protocol

Code	Description	
3	2.4 GHz DSSS, IEC 62591 (*Wireless*HART®)	★

Omni-directional wireless antenna

Code	Description	
WK	External antenna	★
WM	Extended range, external antenna	★
WN	High-gain, remote antenna	

SmartPower

Long-life power module must be shipped separately, order power module 701PBKKF. This is not available with output code A.

Code	Description	
1	Adapter for Black Power Module (I.S. Power Module sold separately)	★

Additional options

HART® Revision configuration (requires HART Protocol output code A)

Option HR7 configures the HART output to HART Revision 7. This option requires the selection of the Advanced Diagnostics (DA2) option. The device with this option can be field configured to HART Revision 5 or 7 if desired.

Code	Description	
HR7	Configured for HART Revision 7	★

Extended product warranty

Code	Description	
WR3	3-year limited warranty	★
WR5	5-year limited warranty	★

Plantweb control functionality

This is not available with output code A and X. With option code 10, user must select seal location option code M in Rosemount DP Level Product Data Sheet. Requires FOUNDATION™ Fieldbus output code F.

Code	Description	
A01	Foundation Fieldbus advanced control function block suite	★

Diagnostics suite

Code	Description	
D01[1]	FOUNDATION™ Fieldbus diagnostics suite (Process Intelligence, Plugged Impulse Line diagnostic)	★
DA2[2]	Advanced HART® diagnostics suite (Process Intelligence, Loop Integrity, Plugged Impulse Line diagnostic, Process Alerts, Service Alerts, Variable Log, Event Log)	★

(1) *This is not available with output code X and A.*
(2) *Requires Plantweb housing and output code A. Includes hardware adjustments as standard.*

Mounting bracket

Code	Description	
B4	Bracket, all SST, 2-in. pipe panel	★
BE	Bracket, 316 SST, B4-style with 316 SST bolting	★

Software configuration

This is not available with output code F.

Code	Description	
C1	Custom software configuration (requires Configuration Data Sheet)	

Gauge pressure calibration

Code	Description	
C3	Gauge pressure calibration on Rosemount 3051SAL A4 only	★

Alarm limit

This is not available with output code F and X.

Code	Description	
C4	NAMUR alarm and saturation levels, high alarm	
C5	NAMUR alarm and saturation levels, low alarm	
C6	Custom alarm and saturation signal levels, high alarm (requires C1 and Configuration Data Sheet)	
C7	Custom alarm and saturation signal levels, low alarm (requires C1 and Configuration Data Sheet)	
C8	Low alarm (standard Rosemount alarm and saturation levels)	

Hardware adjustments

This is not available with output code F, X, and housing style codes 00, 2E, 2F, 2G, 2M, 5A, 5J, or 7J.

Code	Description	
D1	Hardware adjustments (zero, span, alarm, security)	★

Flange adapter

Code	Description	
D2	½–14 NPT flange adapter	★
D9	RC½ SST flange adapter	

Ground screw

This assembly is included with options EP, KP, E1, N1, K1, ND, E4, E7, N7, K7, E2, E3, KA, KC, KD, IA, IB, IE, IF, IG, KG, T1, K2, N3, EM, and KM.

Code	Description	
D4	External ground screw assembly	★

Drain/vent valve

Code	Description	
D5	Delete transmitter drain/vent valves (install plugs)	★

Conduit plug

Transmitter is shipped with 316 SST conduit plug (uninstalled) in place of standard aluminum conduit plug.

Code	Description	
DO	316 SST conduit plug	★

Product certifications

Valid when SuperModule Platform and housing have equivalent approvals.

Code	Description	
E1	ATEX Flameproof	★
I1	ATEX Intrinsic Safety	★
IA	ATEX FISCO Intrinsic Safety (FOUNDATION Fieldbus protocol only)	★
N1	ATEX Type n	★
K1	ATEX Flameproof and Intrinsically Safe, Type n, Dust	★
ND	ATEX Dust	★
E4	Japan Flameproof	★
E5	USA Explosion-proof, Dust Ignition-proof	★
I5	USA Intrinsically Safe, Division 2	★
IE	USA FISCO Intrinsically Safe (FOUNDATION Fieldbus protocol only)	★
K5	USA Explosion-proof, Dust Ignition-proof, Intrinsically Safe, Division 2	★
E6[(1)]	Canada Explosion-proof, Dust Ignition-proof, Division 2	★
I6	Canada Intrinsically Safe	★
IF	Canada FISCO Intrinsically Safe (FOUNDATION Fieldbus protocol only)	★
K6[(1)]	Canada Explosion-proof, Dust Ignition-proof, Intrinsically Safe, Division 2	★
D3[(2)]	Measurement Canada Accuracy Approval	★

Code	Description	
E7	IECEx Flameproof	★
I7	IECEx Intrinsic Safety	★
IG	IECEx FISCO Intrinsic Safety (FOUNDATION Fieldbus protocol only)	★
N7	IECEx Type n	★
K7	IECEx Flameproof, Intrinsic Safety, Type n	★
E2	Brazil Flameproof	★
I2	Brazil Intrinsically Safe	★
IB	Brazil FISCO Intrinsic Safety	★
K2	Brazil Flameproof, Intrinsic Safety, Type n	★
E3	China Flameproof	★
I3	China Intrinsic Safety, Dust Ignition-proof	★
EP	Korea Flameproof	★
IP	Korea Intrinsic Safety	★
KP	Korea Flameproof, Intrinsic Safety	★
EM	Technical Regulations Customs Union (EAC) Flameproof	★
IM	Technical Regulations Customs Union (EAC) Intrinsic Safety	★
IN	Technical Regulations Customs Union (EAC) FISCO Intrinsic Safety	
KM	Technical Regulations Customs Union (EAC) Flameproof, Intrinsic Safety	★
KA(1)	ATEX and Canada Flameproof, Intrinsically Safe, Division 2	★
KB(1)	USA and Canada Explosion-proof, Dust Ignition-proof, Intrinsically Safe, Division 2	★
KC	USA and ATEX Explosion-proof, Intrinsically Safe, Division 2	★
KD(1)	USA, Canada, and ATEX Explosion-proof, Intrinsically Safe	★

(1) *Not available with M20 or G½ conduit entry size.*
(2) *Requires Plantweb housing and hardware adjustments option code D1. Limited availability depending on transmitter type and range. Contact an Emerson representative for additional information.*

Shipboard approvals

Code	Description	
SBS	American Bureau of Shipping	★
SBV	Bureau Veritas (BV) Type Approval	★
SDN	Det Norske Veritas (DNV) Type Approval	★
SLL	Lloyds Register (LR) Type Approval	★

Stainless steel tagging

Code	Description	
Y2	316 SST nameplate, top tag, wire-on tag(s), and fasteners	★

Sensor fill fluid

Silicone fill fluid is standard.

Code	Description	
L1	Inert sensor fill fluid	★

O-ring

Code	Description	
L2	Graphite-filled PTFE O-ring	★

Bolting material

Code	Description	
L4	Austenitic 316 SST bolts	★
L5(1)	ASTM A 193, Grade B7M bolts	★
L6	Alloy K-500 bolts	★
L7(1)	ASTM A 453, Class D, Grade 660 bolts	★
L8	ASTM A 193, Class 2, Grade B8M bolts	★

(1) *Materials of construction comply with metallurgical requirements highlighted within NACE MR 0175/ISO 15156 for sour oil field production environments. Environmental limits apply to certain materials. Consult latest standard for details. Selected materials also conform to NACE MR 0103 for sour refining environments. Order with Q15 or Q25 to receive a NACE certificate.*

Display type

See the Rosemount 3051S Reference Manual for cable requirements. Contact an Emerson representative for additional information. Not available with output code A and housing code 01 or 7J.

Code	Description	
M5(1)	Plantweb LCD display	★
M7	Remote mount LCD display and interface, Plantweb housing, no cable, SST bracket	★
M8	Remote mount LCD display and interface, Plantweb housing, 50 ft. (15 m) cable, SST bracket	★
M9	Remote mount LCD display and interface, Plantweb housing, 100 ft. (31 m) cable, SST bracket	★

(1) *See the Rosemount 3051S Reference Manual for cable requirements. Contact an Emerson representative for additional information.*

Pressure testing

Code	Description	
P1	Hydrostatic testing with certificate	

Special cleaning

This is not available with process connection code A11.

Code	Description	
P2	Cleaning for special services	
P3	Cleaning for less than 1 PPM Chlorine/Fluorine	

Calibration certification

Code	Description	
Q4	Calibration certificate	★
QP	Calibration certificate and tamper evident seal	★

Material traceability certification

Code	Description	
Q8	Material traceability certification per EN 10204 3.1	★

Quality certification for safety

This option is not available with output code F or X. This option is not available with housing code 7J.

Code	Description	
QT	Safety-certified to IEC 61508 with certificate of FMEDA data	★

Seal system performance reports

Code	Description	
QZ	Remote seal system performance calculation report	★

Transient protection

The T1 option is not needed with FISCO Product Certifications; transient protection is included in the FISCO product certification codes IA, IB, IE, IF, and IG. Not available with Housing code 5A, 5J, or 7J.

Code	Description	
T1	Transient terminal block	★

Conduit electrical connector

This is not available with Housing code 5A, 5J, or 7J. Available with Intrinsically Safe approvals only. For FM Intrinsically Safe; Nonincendive (option code I5) or FM FISCO Intrinsically Safe (option code IE), install in accordance with Rosemount drawing 03151-1009.

Code	Description	
GE	M12, 4-pin, male connector (eurofast)	★
GM	A size mini, 4-pin, male connector (minifast)	★

NACE certificate

Materials of construction comply with metallurgical requirements highlighted within NACE® MR 0175/ISO 15156 for sour oil field production environments.

Environmental limits apply to certain materials. Consult latest standard for details.

Selected materials also conform to NACE MR 0103 for sour refining environments.

Order with Q15 or Q25 to receive a NACE certificate.

Code	Description	
Q15	Certificate of compliance to NACE MR0175/ISO 15156 for wetted materials	★
Q25	Certificate of compliance to NACE MR0103 for wetted materials	

Positive Material Identification (PMI)

Code	Description	
Q76	PMI Verification and Certificate	★

Diaphragm seals for Rosemount 3051SAL

Flush Flanged (FF) Seal



- Most common seal
- Good for use in general applications
- Easy installation on flanged connections ranging from 2-in. (DN 50) to 4-in. (DN 100)

Specification and selection of product materials, options, or components must be made by the purchaser of the equipment.

Required model components

Model

Code	Description
FF	Flush flanged seal

Process connection size

Code	ASME B16.5	EN 1092-1/GOST 33259-15	JIS B2238	
G	2-in.	DN 50	50 A	★
7	3-in.	N/A	80 A	★
J	N/A	DN 80	N/A	★
9	4-in.	DN 100	100 A	★

Flange/pressure rating

Code	Description	
1	ASME B16.5 Class 150	★
2	ASME B16.5 Class 300	★
4	ASME B16.5 Class 600	★
G	PN 40 per EN 1092-1	★
5	ASME B16.5 Class 900	
6	ASME B16.5 Class 1500	
7	ASME B16.5 Class 2500	

Code	Description	
H	PN 63 per EN 1092-1	
J	PN 100 per EN 1092-1	
A	10K per JIS B2238	
B	20K per JIS B2238	
D	40K per JIS B2238	
E	PN 10/16 per EN 1092-1, available with DN 100 only	

Materials of construction

Code	Isolating diaphragm	Upper housing	Flange	
CA	316L SST	316L SST	CS	★
DA	316L SST	316L SST	316 SST	★
CB(1)	Alloy C-276	316L SST	CS	
DB(1)	Alloy C-276, seam-welded	316L SST	316 SST	
CC	Tantalum	316L SST	CS	★
DC	Tantalum, seam-welded	316L SST	316 SST	★
C6	Duplex 2205 SST	316 SST	CS	
D6	Duplex 2205 SST	316 SST	316 SST	
D5	Duplex 2507 SST	316L SST	316 SST	
C5	Duplex 2507 SST	316L SST	CS	

(1) *Not available with option code SC.*

Flushing connection ring (lower housing)

If no intermediate gasket material is selected, a Klingersil® C-4401 gasket will be supplied.

Lower housings are shipped loose and are not included in option P1 for hydrostatic pressure testing.

Code	Description	
0	None	★
A	316 SST	
B	Alloy C-276	

Flushing connection quantity and size

Code	Description	
0	None	★
1	One ¼–18 NPT flushing connection	
3	Two ¼–18 NPT flushing connections	
7	One ½–14 NPT flushing connection	
9	Two ½–14 NPT flushing connections	
Y	Assemble to Rosemount 319 flushing ring	

Additional options

Cold temperature remote seal applications

Code	Description	
RB	Extra fill fluid for cold temperature applications	

Remote seal diaphragm thickness

This is not available with Tantalum diaphragms (Material of Construction codes CC and DC).

Code	Description	
SC	0.006-in. (150 µm) available with 316L SST, Alloy C-276, and Duplex 2205 SST for abrasive applications	

Flushing connection ring plugs

Code	Description	
SF	Alloy C-276 plug(s) for flushing connection(s)	★
SG	SST plug(s) for flushing connection(s)	★
SH	SST drain/vent(s) for flushing connection(s)	★

Drain/vent valve

Required when using seal system type option codes C or D with differential pressure module option code D.

Code	Description	
FV	Low side drain/vent valve	

Lower housing alignment clamp

Code	Description	
SA	Lower housing alignment clamp	★

Intermediate gasket material

Code	Description	
S0	No gasket for flushing ring connection (lower housing)	★
SY	Klingersil® C-4401 gasket	★
SJ	PTFE gasket	★
SK	Barium sulfate-filled PTFE gasket	
SN	GRAFOIL® gasket	

Remote seal diaphragm coating

Code	Description	
SZ[(1)]	0.0002-in. (5 µm) gold-plated diaphragm	
SV	PTFE coated diaphragm for non-stick purposes	

Code	Description	
FP[2]	CorrosionShield™ PFA coated diaphragm	

(1) *Not available with Tantalum diaphragms (Material of Construction codes CC and DC).*
(2) *Not compatible with spiral wound gaskets.*

Complete the 3051SAL model number by specifying options as needed:

ERS Transmitter options found at Rosemount 3051SAL Transmitter for ERS Applications

Scalable level transmitter options found at Rosemount 3051S Scalable™ Level Transmitter

Extended Flanged (EF) Seal



- Good for use in viscous applications with plugging issues
- Seal diaphragm installed flush with inner tank wall to prevent process plugging
- Easy installation on 3-in. (DN 80) and 4-in. (DN 100) flanged connections

Specification and selection of product materials, options, or components must be made by the purchaser of the equipment.

Required model components

Model

Code	Description	
EF	Extended flanged seal	★

Process connection size

Code	ASME B16.5	EN 1092-1/GOST 33259-15	JIS B2238	Extension diameters	
7	3-in. schedule 80	DN 80	80A	2.58-in. (66 mm)	★
9	4-in. schedule 80	DN 100	100A	3.50-in. (89 mm)	★

Flange/pressure rating

Code	Description	
1	ASME B16.5 Class 150	★
2	ASME B16.5 Class 300	★
4	ASME B16.5 Class 600	★
G	PN 40 per EN 1092-1	★

Code	Description	
5	ASME B16.5 Class 900	
6	ASME B16.5 Class 1500	
7	ASME B16.5 Class 2500	
H	PN 63 per EN 1092-1	
J	PN 100 per EN 1092-1	
A	10K per JIS B2238	
B	20K per JIS B2238	
D	40K per JIS B2238	
E	PN 10/16 per EN 1092-1, available with DN 100 only	

Materials of construction

Code	Isolating diaphragm	Extension/gasket surface	Mounting flange	
CA	316L SST	316L SST	CS	★
DA	316L SST	316L SST	316 SST	★
CB	Alloy C-276	Alloy C-276	CS	★
DB	Alloy C-276	Alloy C-276	316 SST	★
C6	Duplex 2205 SST	Duplex 2205 SST	CS	
D6	Duplex 2205 SST	Duplex 2205 SST	316 SST	
D5	Duplex 2507 SST	316L SST	316 SST	
C5	Duplex 2507 SST	316L SST	CS	

Seal extension length

Code	Description	
20	2-in. (50 mm)	★
40	4-in. (100 mm)	★
60[1]	6-in. (150 mm)	★

(1) *Only available with SST (model code CA & DA).*

Additional options

Cold temperature remote seal applications

Code	Description	
RB	Extra fill fluid for cold temperature applications	★

Remote seal diaphragm thickness

Code	Description	
SC	0.006-in. (150 µm) available with 316L SST, Alloy C-276, and Duplex 2205 SST for abrasive applications	

Remote seal diaphragm coating

Code	Description	
SZ	0.0002-in. (5 µm) gold-plated diaphragm	
SV	PTFE coated diaphragm for non-stick purposes	
FP(1)	CorrosionShield™ PFA coated diaphragm	

(1) *Not compatible with spiral wound gaskets.*

Complete the 3051SAL model number by specifying options as needed:

ERS Transmitter options found at Rosemount 3051SAL Transmitter for ERS Applications

Scalable level transmitter options found at Rosemount 3051S Scalable™ Level Transmitter

Remote Flanged (RF) Seal



- Designed to improve performance on smaller process connections
- Easy installation on flanged connections ranging from ½- to 1½-in. (DN 25– DN 40)
- Lower housing/flushing ring required

Specification and selection of product materials, options, or components must be made by the purchaser of the equipment.

Required model components

Model

Code	Description	
RF	Remote flanged seal	★

Process connection size

Code	ASME B16.5	EN 1092-1/GOST 33259-15	JIS B2238	
2	1-in.	N/A	25A	★
4	1½-in.	N/A	40A	★
D	N/A	DN 25	N/A	★
F	N/A	DN 25	N/A	★
1	½-in.	N/A	N/A	
A	¾-in.	N/A	N/A	

Flange/pressure rating

Code	Description	
1	ASME B16.5 Class 150	★
2	ASME B16.5 Class 300	★
4	ASME B16.5 Class 600	★
G	PN 40 per EN 1092-1	★
5	ASME B16.5 Class 900	
6	ASME B16.5 Class 1500	
7	ASME B16.5 Class 2500	
A	10K per JIS B2238	
B	20K per JIS B2238	
D	40K per JIS B2238	

Materials of construction

Code	Isolating diaphragm	Upper housing	Flange	
CA[1]	316L SST	316L SST	CS	★
DA	316L SST	316L SST	316 SST	★
CB[1]	Alloy C-276	316L SST	CS	★
DB	Alloy C-276	316L SST	316 SST	★
CC[1]	Tantalum	316L SST	CS	★
DC	Tantalum	316L SST	316 SST	★
C6[1]	Duplex 2205 SST	316 SST	CS	
D6	Duplex 2205 SST	316 SST	316 SST	
D5	Duplex 2507 SST	316L SST	316 SST	

(1) *Not available with stud bolt design.*

Flushing connection ring material (lower housing)

If no intermediate gasket material is selected, a Klingersil C-4401 aramid fiber gasket will be supplied.

Lower housings are shipped loose and are not included in option P1 for hydrostatic pressure testing.

Code	Description	
A	316L SST	★
B	Alloy C-276	★

Flushing connection quantity and size

Code	Description	
5	None	★
1	One ¼–18 NPT flushing connection	★
3	Two ¼–18 NPT flushing connections	★
7	One ½–14 NPT flushing connection	
9	Two ½–14 NPT flushing connections	
Y	Assemble to Rosemount 319 flushing ring	★

Additional options

Cold temperature remote seal applications

Code	Description	
RB	Extra fill fluid for cold temperature applications	★

Remote seal diaphragm thickness

This is not available with Tantalum diaphragms (Material of Construction codes CC and DC).

Code	Description	
SC	0.006-in. (150 µm) available with 316L SST, Alloy C-276, and Duplex 2205 SST for abrasive applications	

Large diaphragm size

Code	Description	
S9	4.1-in. (104 mm) diaphragm diameter	

Flushing connection ring plugs

Code	Description	
SF	Alloy C-276 plug(s) for flushing connection(s)	★
SG	SST plug(s) for flushing connection(s)	★
SH	SST drain/vent(s) for flushing connection(s)	★

Flushing ring connection gaskets

Code	Description	
SY	Klingersil C-4401 gasket	★
SJ	PTFE gasket	★
SR	Ethylene propylene gasket	
SN	GRAFOIL gasket	
S6	Klinger® Top-Chem 2000 gasket	
SK	Barium sulfate-filled PTFE gasket	

Code	Description	
SJ	PTFE gasket	★

Remote seal bolt material

Note
Default is Tin plated CS.

Code	Description	
S3	304 SST bolts	★
S4	316 SST bolts	

Remote seal diaphragm coating

Code	Description	
SZ(1)	0.0002-in. (5 µm) gold-plated diaphragm	
SV	PTFE coated diaphragm for non-stick purposes	
FP(2)	CorrosionShield™ PFA coated diaphragm	

(1) *Not available with Tantalum diaphragms (Material of Construction codes CC and DC).*
(2) *Not compatible with spiral wound gaskets.*

Complete the 3051SAL model number by specifying options as needed:

ERS Transmitter options found at Rosemount 3051SAL Transmitter for ERS Applications

Scalable level transmitter options found at Rosemount 3051S Scalable™ Level Transmitter

PF Pancake Seal



- Remote mount connection with capillary on the side of the seal
- Support tube used to facilitate installation
- Can be ordered with or without flange

Required model components

Model

Code	Description	
PF	Pancake seal	★

Process connection size

Code	ASME	EN 1092-1/GOST 33259-15	
G	2-in.	DN 50	★
7	3-in.	N/A	★
J	N/A	DN 80	★
0	No flanged supplied, seal maximum working pressure (MWP) based on customer supplied flange	N/A	★
9	N/A	No flanged supplied, seal MWP based on customer supplied flange	★
1	Class 150	N/A	★
2	Class 300	N/A	★
4	Class 600	N/A	★
G	N/A	PN40	★
5	Class 900	N/A	
6	Class 1500	N/A	
7	Class 2500	N/A	
H	N/A	PN63	
J	N/A	PN100	

Materials of construction

Code	Isolating diaphragm	Upper housing	Flange	
LA(1)	316L SST	316L SST	None	★
CA(1)	316L SST	316L SST	CS	★
DA(1)	316L SST	316L SST	316 SST	★
LB	Alloy C-276, seam-welded	316L SST	None	★
CB	Alloy C-276, seam-welded	316L SST	CS	★
DB	Alloy C-276, seam-welded	316L SST	316 SST	★
LC	Tantalum, seam-welded	316L SST	None	★
CC	Tantalum, seam-welded	316L SST	CS	★
DC	Tantalum, seam-welded	316L SST	316 SST	★
L6	Duplex 2205 SST	316 SST	None	
C6	Duplex 2205 SST	316 SST	CS	
D6	Duplex 2205 SST	316 SST	316 SST	
D5	Duplex 2507 SST	316L SST	316 SST	
C5	Duplex 2507 SST	316L SST	CS	
L5	Duplex 2507 SST	316L SST	None	

(1) *For use with customer supplied spiral metallic gaskets.*

Flushing connection ring (lower housing)

If no intermediate gasket material is selected, a Klingersil® C-4401 gasket will be supplied.

Lower housings are shipped loose and are not included in option P1 for hydrostatic pressure testing.

Code	Description	
0	None	★
A	316 SST	
B	Alloy C-276	

Flushing connection quantity and size

Code	Description	
0	None	★
1	One ¼–18 NPT flushing connection	
3	Two ¼–18 NPT flushing connections	
7	One ½–14 NPT flushing connection	
9	Two ½–14 NPT flushing connections	
Y	Assemble to Rosemount 319 flushing ring	

Additional options

Lower housing alignment clamp

Code	Description	
SA	Lower housing alignment clamp	★

Flushing connection ring gaskets

Supplied with Klinger C-4401 gasket if no other flushing connection ring gasket option is selected.

Code	Description	
S0	No gasket for lower housing	★
SY	Klingersil C-4401 gasket	★
SJ	PTFE gasket	★
SK	Barium sulfate-filled PTFE gasket	
SN	GRAFOIL gasket	

Flushing connection ring plugs

Code	Description	
SF	Alloy C-276 plug(s) for flushing connection(s)	★
SG	SST plug(s) for flushing connection(s)	★
SH	SST drain/vent(s) for flushing connection(s)	★

Remote seal diaphragm thickness

This is not available with Tantalum diaphragms (Material of Construction codes CC and DC).

Code	Description	
SC	0.006-in. (150 µm) diaphragm thickness	

Cold temperature remote seal applications

Code	Description	
RB	Extra fill fluid for cold temperature applications	

Remote seal diaphragm coating

Code	Description	
SZ(1)	0.0002-in. (5 µm) gold-plated diaphragm	
SV	PTFE coated diaphragm for non-stick purposes	

(1) *Not available with Tantalum diaphragms (Material of Construction codes CC and DC).*

Complete the 3051SAL model number by specifying options as needed:

ERS Transmitter options found at Rosemount 3051SAL Transmitter for ERS Applications

Scalable level transmitter options found at Rosemount 3051S Scalable™ Level Transmitter

FC Flush Flanged Seal - Ring Type Joint (RTJ) gasket surface



- RTJ gaskets are metallic sealing rings, often used in high pressure/high temperature applications
- Gasket surface on seal contains groove for RTJ gasket (user supplied)

Required model components

Model

Code	Description
FC	Flush flanged seal - Ring Type Joint (RTJ) gasket surface

Process connection size

Code	Description	
G	2-in.	
7	3-in.	
9	4-in.	

Flange/pressure rating

Code	Description	
1	Class 150	
2	Class 300	
4	Class 600	
5	Class 900	
6	Class 1500	
7	Class 2500	

Materials of construction

Code	Diaphragm and wetted	Upper housing	Flange	
DA	316L SST	316L SST	316 SST	
KB	Alloy C-276	316L SST	316 SST	
K6	Duplex 2205 SST	316 SST	316 SST	
MB	Alloy C-276	316L SST	CS	

Code	Diaphragm and wetted	Upper housing	Flange	
CA	316L SST	316L SST	CS	
M6	Duplex 2205 SST	316 SST	CS	
M5	Duplex 2507 SST	Duples 2205 SST	CS	
K5	Duplex 2507 SST	Duplex 2205 SST	316 SST	

Flushing connection ring material (lower housing)

Lower housings are shipped loose and are not included in option P1 for hydrostatic pressure testing.

Code	Description	
0	None	
A	316 SST	
B	Alloy C-276	

Flushing connection quantity and size

Code	Description	
0	None	
1	One ¼–18 NPT flushing connection	
3	Two ¼–18 NPT flushing connections	
7	One ½–14 NPT flushing connection	
9	Two ½–14 NPT flushing connections	
Y	Assemble to Rosemount 319 Flushing Ring	★

Additional options

Flushing ring connection plugs

Code	Description	
SF	Alloy C-276 plug(s) for flushing connection(s)	
SG	SST plug(s) for flushing connection(s)	
SH	SST drain/vent(s) for flushing connection(s)	

Remote seal diaphragm thickness

This is not available with Tantalum diaphragms (Material of Construction codes CC and DC).

Code	Description	
SC	0.006-in. (150 µm) available with 316L SST, Alloy C-276, and Duplex 2205 SST for abrasive applications	

Cold temperature remote seal applications

Code	Description	
RB	Extra fill fluid for cold temperature applications	

Remote seal diaphragm coating

This is only available on 316L SST and Alloy C-276.

Code	Description	
SZ	0.002-in. (5 µm) gold-plated diaphragm	
SV	PTFE coated diaphragm for nonstick purposes only	

Complete the 3051SAL model number by specifying options as needed:

ERS Transmitter options found at Rosemount 3051SAL Transmitter for ERS Applications

Scalable level transmitter options found at Rosemount 3051S Scalable™ Level Transmitter

RC Remote Flanged Seal - Ring Type Joint (RTJ) gasket surface



- Remote mounted with capillary
- RTJ gaskets are metallic sealing rings, often used in high pressure/high temperature applications
- Gasket surface on seal contains groove for RTJ gasket (user supplied)

Required model components

Model

Code	Description
RC	Remote flanged seal - Ring Type Joint (RTJ) gasket surface

Process connection sizes

Code	Description	
1	½-in. (Class 150 to 1500 includes mounting ring bolts and mounting studs)	
A	¾-in. (Class 150 includes mounting ring bolts and mounting studs)	
2	1-in.	
4	1½-in.	

Flange/pressure rating

Code	Description	
1	Class 150	
2	Class 300	

Code	Description	
4	Class 600	
5	Class 900	
6	Class 1500	
7	Class 2500	

Materials of construction

Code	Diaphragm and wetted	Upper housing	
LA	316L SST	316L SST	
LB	Alloy C-276	316L SST	
LC	Tantalum	316L SST	

Flushing connection ring material (lower housing)

If no intermediate gasket material is selected, a Klingersil C-4401 aramid fiber gasket will be supplied.

Lower housings are shipped loose and are not included in option P1 for hydrostatic pressure testing.

Code	Description	
A	316L SST	
B	Alloy C-276	

Flushing ring connection and size

Code	Description	
0	None	
1	One ¼–18 NPT flushing connection	
3	Two ¼–18 NPT flushing connections	
7	One ½–14 NPT flushing connection	
9	Two ½–14 NPT flushing connections	
Y	Assemble to Rosemount 319 Flushing Ring	★

Additional options

Flushing ring connection gaskets

Code	Description	
SY	Klingersil C-4401 gasket	★
SJ	PTFE gasket	★
SR	Ethylene propylene gasket	
SN	GRAFOIL gasket	
S6	Klinger® Top-Chem 2000 gasket	
SK	Barium sulfate-filled PTFE gasket	

Code	Description	
SJ	PTFE gasket	★

Flushing connection ring plugs

Code	Description	
SF	Alloy C-276 plug(s) for flushing connection(s)	
SG	316 SST plug(s) for flushing connection(s)	
SH	316 SST vent/drain for flushing connection(s)	

Remote seal diaphragm thickness

Code	Description	
SC	0.006-in. (150 µm) available with 316L SST, Alloy C-276, and Duplex 2205 SST for abrasive applications	

Remote seal bolt material

Note
Default is Tin plated CS.

Code	Description	
S3(1)	304 SST bolts (only available for stud bolt design)	
S4	316 SST bolts (only available for stud bolt design)	★

(1) *Standard stud bolts are carbon steel.*

Large diaphragm size

Code	Description	
S9	4.1-in. (104 mm) diaphragm diameter	

Cold temperature remote seal applications

Code	Description	
RB	Extra fill fluid for cold temperature applications	

Remote seal diaphragm coating

This is only available on 316L SST and Alloy C-276.

Code	Description	
SZ	0.002-in. (5 µm) gold-plated diaphragm	
SV	PTFE coated diaphragm for nonstick purposes only	

Complete the 3051SAL model number by specifying options as needed:

ERS Transmitter options found at Rosemount 3051SAL Transmitter for ERS Applications

Scalable level transmitter options found at Rosemount 3051S Scalable™ Level Transmitter

Remote Threaded (RT) Seal



- For use with threaded process connections (¼-18 to 1-11.5 NPT)
- Rated for use in high-pressure applications (up to 2500 PSI)
- Optional flushing connections available

Required model components

Model

Code	Description	
RT	Remote threaded seal	★

Process connection size

Code	Description	
3	½-14 NPT	★
4	¾-14 NPT	★
5	1-11.5 NPT	★
1	¼-18 NPT	
6	1¼ - 11.5 NPT	

Pressure rating

Code	Description	
0	2500 psi	★
2[(1)]	5000 psi	★
8 [(2)]	1500 psi	★

(1) *Consult an Emerson representative for pricing and availability.*
(2) *Only available with 4.1 in. (104 mm) diaphragm (large diaphragm size code S9).*

Isolating diaphragm material

Code	Description	Upper housing material	
DA	316L SST	316L SST	★
DB	Alloy C-276	316L SST	★
DC	Tantalum	316L SST	★
D5	Duplex 2507 SST	316L SST	

Flushing connection ring material (lower housing)

If no intermediate gasket material is selected, a Klingersil C-4401 aramid fiber gasket will be supplied.

Default lower housing assembly bolts are carbon steel for ASME and 304 SST for EN.

Lower housings are shipped loose and are not included in option P1 for hydrostatic pressure testing.

Code	Description	
A	316L SST	★
B	Alloy C-276	★

Flushing ring connection quantity and size

Code	Description	
1	One ¼-in. flushing connection	★
3	Two ¼-in. flushing connections	★
5	None	★
7	One ½-14 NPT flushing connection	★
9	Two ½-14 NPT flushing connections	★
Y	Assemble to Rosemount 319 Flushing Ring	★

Additional options

Cold temperature remote seal application

Code	Description	
RB	Extra fill fluid for cold temperature applications	★

Remote seal diaphragm thickness

This is not available with Tantalum diaphragms (Material of Construction codes CC and DC).

Code	Description	
SC	0.006-in. (150 µm) available with 316L SST, Alloy C-276, and Duplex 2205 SST for abrasive applications	

Remote seal flushing plug, drain/vent

Code	Description	
SF	Alloy C-276 plug(s) for flushing connection(s)	★
SG	316 SST plug(s) for flushing connection(s)	★
SH	316 SST drain/vent(s) for flushing connection(s)	★

Remote seal gasket material

Code	Description	
SY	Klingersil C-4401 gasket	★
SJ	PTFE gasket	★

Code	Description	
SR	Ethylene propylene gasket	★
SN	GRAFOIL gasket	★
S6	Klinger Top-Chem 2000 gasket	
SK	Barium sulfate-filled PTFE gasket	

Remote seal bolt material

Note
Default is Tin plated CS.

Code	Description	
S3	304 SST bolts	★
S4	316 SST bolts	

Large diaphragm size

Code	Description	
S9 (1)	4.1-in. (104 mm) diaphragm diameter	

(1) *Only available with Pressure Rating code 8.*

Remote seal diaphragm coating

Code	Description	
SZ(1)	0.0002-in. (5 µm) gold-plated diaphragm	
SV	PTFE coated diaphragm for non-stick purposes	
FP(2)	CorrosionShield™ PFA coated diaphragm	

(1) *Not available with Tantalum diaphragms (Material of Construction codes CC and DC).*
(2) *Not compatible with spiral wound gasket.*

Special threads in lower housing

Code	Description	
R9	Male lower housing threads	

Complete the 3051SAL model number by specifying options as needed:

ERS Transmitter options found at Rosemount 3051SAL Transmitter for ERS Applications

Scalable level transmitter options found at Rosemount 3051S Scalable™ Level Transmitter

SC Hygienic Tri-Clamp® Seal



- Good for use in hygienic applications
- Easy installation on Tri-Clover style Tri-Clamp connections (1.5-in. to 3-in.)
- Conforms to 3-A® standard 74-06

Required model components

Model

Code	Description	
SC(1)(2)	Tri-Clover style Tri Clamp® seal	★

(1) *Clamp and gasket furnished by user. The maximum working pressure is dependent upon the clamp pressure rating.*
(2) *All process wetted parts have surface finish of Ra < 32 µin (0.81 µm) standard unless otherwise specified.*

Process connection size

Code	Description	
3(1)	1½-in.	★
5(2)	2-in.	★
7	3-in.	★

(1) *Min span is 1000 inH_2O or 2490 mbar for 1½-in. Tri- Clamp seal.*
(2) *Min span is 150 inH_2O or 373 mbar for 2-in. Tri-Clamp seal.*

Maximum working pressure

Code	Description	
0	1000 PSI	★

Materials of construction

Code	Isolating diaphragm material	Upper housing material	
LA00	316L SST	316L SST	★
LB00	Alloy C-276	316L SST	

Additional options

Remote seal diaphragm polishing

Code	Description	
RE	Electropolishing	

Remote seal diaphragm surface finish

Code	Description	
RD	10 µin. (0.25 µm) Ra diaphragm surface finish	
RG	15 µin. (0.375 µm) Ra diaphragm surface finish	
RH	20 µin. (0.5 µm) Ra diaphragm surface finish	

Surface finish certification

Q16 is only available when the diaphragm seal has surface finish options (RD, RG, and RH).

Code	Description	
Q16	Surface finish certification for hygienic remote seals	★

Complete the 3051SAL model number by specifying options as needed:

ERS Transmitter options found at Rosemount 3051SAL Transmitter for ERS Applications

Scalable level transmitter options found at Rosemount 3051S Scalable™ Level Transmitter

SS Hygienic Tank Spud Seal



- Commonly used in hygienic level applications
- Seal diaphragm installed flush with inner tank wall
- Conforms to 3-A standard 74-06

Required model components

Model

Code	Description	
SS[1][2]	Hygienic Tank Spud Seal	★

(1) *Clamp and ethylene propylene O-ring (conforms to 3-A standard 74 and USP Class VI) supplied.*
(2) *All process wetted parts have surface finish of Ra < 32 µin (0.81 µm) standard unless otherwise specified.*

Process connection size

Code	Description	
A	4-in. Sch. 5 Tri-Clamp	★

Maximum working pressure (clamp rating)

Code	Description	
0	150 psi (10.3 bar)	★

Upper housing

Code	Description	
A	316L SST	★

Materials of construction

Code	Diaphragm and wetted	Extension	
AL[1]	316L SST	316L SST	★
BB	Alloy C-276	316L SST	

(1) *Diaphragm brazed and TIG-welded to extension.*

Extension length

Code	Description	
2	2-in. (50 mm) extension	★

Code	Description	
6	6-in. (150 mm) extension	★

Additional options

Remote seal diaphragm thickness

Code	Description	
SC	0.006-in. (150 µm) available with 316L SST and Alloy C-276 for abrasive applications	

Tank spud included with shipment

Code	Description	
S1	SST Tank spud included with shipment	★

Remote seal diaphragm polishing

Code	Description	
RE	Electropolishing	

Remote seal diaphragm surface finish

Code	Description	
RH	20 µin. (0.5 µm) Ra diaphragm surface finish	
RG (1)	15 µin. (0.375 µm) Ra diaphragm surface finish	

(1) *Requires option code RE (Electropolishing).*

Surface finish certification

Q16 is only available when the diaphragm seal has surface finish options (RD, RG, and RH).

Code	Description	
Q16	Surface finish certification for hygienic remote seals	★

Complete the 3051SAL model number by specifying options as needed:

ERS Transmitter options found at Rosemount 3051SAL Transmitter for ERS Applications

Scalable level transmitter options found at Rosemount 3051S Scalable™ Level Transmitter

Rosemount 3051L Level Transmitter ordering information



The Rosemount 3051L Level Transmitter combines the performance and capabilities of Rosemount 3051 Transmitters with the reliability and quality of a direct mount seal in one model number. Rosemount 3051L Level Transmitters offer a variety of process connections, configurations, and fill fluid types to meet a breadth of level applications.

- Quantify and optimize total system performance (code QZ).
- Tuned-System assembly (code S1).
- Loop Integrity Diagnostic detects issues that might compromise the integrity of the output signal (code DA1).
- Bluetooth® enables efficient, reliable, and safe configuration and maintenance (code BLE).
- Simplify level configuration with a built-in level configurator method that guides you through setting up your transmitter to measure level and volume (code M6, BLE, D1, DA1, T9, or RK).
- Back-lit Graphical Display with Local Language Capability (code M6).
- Safety certification and proof testing (code QT and T9).

CONFIGURE > VIEW PRODUCT >

Online product configurator

Many products are configurable online using our Product Configurator. Select the **Configure** button above or visit our website to start. With this tool's built-in logic and continuous validation, you can configure your products more quickly and accurately.

Specifications and options

See the Specifications and options section for more details on each configuration. Specification and selection of product materials, options, or components must be made by the purchaser of the equipment. See the Material selection section for more information.

Model codes

Model codes contain the details related to each product. Exact model codes will vary; an example of a typical model code is shown in Figure 6.

Figure 6: Model Code Example

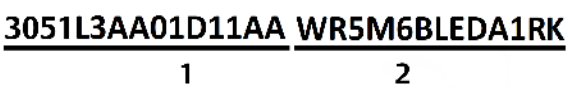

1. Required model components (choices available on most)
2. Additional options (variety of features and functions that may be added to products)

Optimizing lead time

The starred offerings (★) represent the most common options and should be selected for the fastest delivery times. The non-starred offerings are subject to additional delivery lead time.

Required model components

Model

Code	Description	
3051L	Level transmitter	★

Pressure range

Code	Description	
2	–250 to 250 inH_2O (–621.60 to 621.60 mbar)	★
3	–1000 to 1000 inH_2O (–2.48 to 2.48 bar)	★
4	–300 to 300 psi (–20.68 to 20.68 bar)	★

Transmitter output

Code	Description	
A	4–20 mA with digital signal based on HART® Protocol	★
F	FOUNDATION™ Fieldbus Protocol	★
W(1)	PROFIBUS® PA Protocol	★
X(2)	Wireless (requires wireless options and engineered polymer housing)	★
M(3)	Low-power, 1–5 Vdc with digital signal based on HART Protocol	

(1) *For local addressing and configuration, M4 (LOI) is required. Not available with product certification codes E4, EM, EP, I6, IM, KD, KL, KM, KP, KS, and N3.*
(2) *This option is only available with intrinsically safe approvals.*
(3) *Only available with C6, E2, E5, I5, K5, KB, EM, IM, KM, EP, and E8 product certifications.*

Process connection size, material, extension length (high side)

Code	Process connection size	Material	Extension length	
G0[1]	2-in./DN 50/A	316L SST	Flush mount only	★
H0[1]	2-in./DN 50	Alloy C-276	Flush mount only	★
J0	2-in./DN 50	Tantalum	Flush mount only	★
A0[1]	3-in./DN 80	316L SST	Flush mount	★
A2[1]	3-in./DN 80	316L SST	2-in./50 mm	★
A4[1]	3-in./DN 80	316L SST	4-in./100 mm	★
A6[1]	3-in./DN 80	316L SST	6-in./150 mm	★
B0[1]	4-in./DN 100	316L SST	Flush mount	★
B2[1]	4-in./DN 100	316L SST	2-in./50 mm	★
B4[1]	4-in./DN 100	316L SST	4-in./100 mm	★
B6[1]	4-in./DN 100	316L SST	6-in./150 mm	★
C0[1]	3-in./DN 80	Alloy C-276	Flush mount	★
C2[1]	3-in./DN 80	Alloy C-276	2-in./50 mm	★
C4[1]	3-in./DN 80	Alloy C-276	4-in./100 mm	★
C6[1]	3-in./DN 80	Alloy C-276	6-in./150 mm	★
D0[1]	4-in./DN 100	Alloy C-276	Flush mount	★
D2[1]	4-in./DN 100	Alloy C-276	2-in./50 mm	★
D4[1]	4-in./DN 100	Alloy C-276	4-in./100 mm	★
D6[1]	4-in./DN 100	Alloy C-276	6-in./150 mm	★
E0	3-in./DN 80	Tantalum	Flush mount only	★
F0	4-in./DN 100	Tantalum	Flush mount only	★

(1) *Materials of Construction comply with metallurgical requirements highlighted within NACE MR0175/ISO 15156 for sour oil field production environments. Environmental limits apply to certain materials. Consult latest standard for details. Selected materials also conform to NACE MR0103 for sour refining environments.*

Mounting flange size, rating, material (high side)

Code	Size	Rating	Material	
M	2-in.	ASME B16.5 Class 150	CS	★
A	3-in.		CS	★
B	4-in.		CS	★
N	2-in.	ASME B16.5 Class 300	CS	★
C	3.in.		CS	★
D	4-in.		CS	★
P	2-in.	ASME B16.5 Class 600	CS	★
E	3-in.		CS	★
X(1)	2-in.	ASME B16.5 Class 150	316 SST	★
F(1)	3-in.		316 SST	★
G(1)	4-in.		316 SST	★
Y(1)	2-in.	ASME B16.5 Class 300	316 SST	★
H(1)	3-in.		316 SST	★
J(1)	4-in.		316 SST	★
Z(1)	2-in.	ASME B16.5 Class 600	316 SST	★
L(1)	3-in.		316 SST	★
Q	DN 50	PN 10-40 per EN 1092-1	CS	★
R	DN 80	PN 40 per EN 1092-1	CS	★
S	DN 100		CS	★
V	DN 100	PN 10/16 per EN 1092-1	CS	★
K(1)	DN 50	PN 10-40 per EN 1092-1	316 SST	★
T(1)	DN 80	PN 40 per EN 1092-1	316 SST	★
U(1)	DN 100		316 SST	★
W(1)	DN 100	PN 10/16 per EN 1092-1	316 SST	★
7(1)	4-in.	ASME B16.5 Class 600	316 SST	★
1	N/A	10K per JIS B2238	316 SST	
2	N/A	20K per JIS B2238	CS	
3	N/A	40K per JIS B2238	CS	
4(1)	N/A	10K per JIS B2238	CS	
5(1)	N/A	20K per JIS B2238	316 SST	
6(1)	N/A	40K per JIS B2238	316 SST	

(1) *Materials of Construction comply with metallurgical requirements highlighted within NACE MR0175/ISO 15156 for sour oil field production environments. Environmental limits apply to certain materials. Consult latest standard for details. Selected materials also conform to NACE MR0103 for sour refining environments.*

Seal fill fluid

Code	Description	Specific gravity	Temperature limits (ambient temperature of 70 °F [21 °C])	
D	Silicone 200	0.93	–49 to 401 °F (–45 to 205 °C)	★
F	Silicone 200 for vacuum applications	0.93	For use in vacuum applications below 14.7 psia (1 bar-a), refer to vapor pressure curves in Rosemount DP Level Fill Fluid Specification Technical Note.	★
L	Silicone 704 diffusion pump fluid	1.07	32 to 401 °F (0 to 205 °C)	★
C	Silicone 704 for vacuum applications	1.07	For use in vacuum applications below 14.7 psia (1 bar-a), refer to vapor pressure curves in Rosemount DP Level Fill Fluid Specification Technical Note.	★
A	SYLTHERM™ XLT	0.85	–102 to 293 °F (–75 to 145 °C)	★
H	Inert (halocarbon)	1.85	–49 to 320 °F (–45 to 160 °C)	★
G	Glycerin and water	1.13	5 to 203 °F (–15 to 95 °C)	★
N	Neobee® M-20	0.92	5 to 401 °F (–15 to 205 °C)	★
P	Propylene glycol and water	1.02	5 to 203 °F (–15 to 95 °C)	★

Low pressure side

Code	Configuration	Flange adapter	Diaphragm material	Sensor fluid	
11(1)	Gauge	SST	316L SST	Silicone	★
21	Differential	SST	316 SST	Silicone	★
22(1)	Differential	SST	Alloy C-276	Silicone	★
2A(2)	Differential	SST	316 SST	Inert (halocarbon)	★
2B(1)(2)	Differential	SST	Alloy C-276	Inert (halocarbon)	★
31(1)	Tuned-system assembly with remote seal	None	316 SST	Silicone (requires option code S1)	★

(1) *Materials of Construction comply with metallurgical requirements highlighted within NACE MR0175/ISO 15156 for sour oil field production environments. Environmental limits apply to certain materials. Consult latest standard for details. Selected materials also conform to NACE MR0103 for sour refining environments.*

(2) *Not available with wireless output (code X).*

O-ring

Code	Description	
A	Glass-filled PTFE	★

Housing material

Code	Material	Conduit entry size	
A	Aluminum	½–14 NPT	★
B	Aluminum	M20 x 1.5	★
E	Aluminum, ultra low copper	½–14 NPT	
F	Aluminum, ultra low copper	M20 x 1.5	
J	SST	½–14 NPT	★

Code	Material	Conduit entry size	
K	SST	M20 x 1.5	★
P(1)	Engineered polymer	No conduit entries	★
D(2)	Aluminum	G½	
M(2)	SST	G½	

(1) *Only available with wireless output (code X).*
(2) *Transmitter conduit entry will be ½ NPT and a ½ NPT to G½ thread adapter will be provided. Only available with product certifications options I1, I2, I3, I7, IA, IB, IM, KA, N1, N3, and N7. Product certifications options E4 and IG are available with aluminum only (option D).*

Wireless options

Requires wireless output (code X) and engineered polymer housing (code P).

Wireless transmit rate, operating frequency, and protocol

Code	Description	
WA3	User configurable transmit rate, 2.4 GHz *Wireless*HART®	★

Antenna and SmartPower

Code	Description	
WP5	Internal antenna, compatible with Green Power Module (I.S. Power Module sold separately)	★

Additional options

Include with selected model number.

Local wireless device access

Code	Description	
BLE(1)	Bluetooth® configuration and maintenance	★

(1) *Requires the Graphical LCD Display (code M6).*

Extended product warranty

Code	Description	
WR3	3-year limited warranty	★
WR5	5-year limited warranty	★

Plantweb™ control functionality

Code	Description	
A01	FOUNDATION™ Fieldbus control function block suite	★

Plantweb™ diagnostic functionality

Code	Description	
DA0[1]	Loop Integrity Diagnostic	★
DA1[1]	Loop Integrity and Plugged Impulse Line Diagnostics	★
D01	FOUNDATION™ Fieldbus Diagnostics Suite	★

(1) *Only available with 4-20 mA HART protocol (code A).*

Seal assemblies

"Assemble-to" items are specified separately and require a completed model number.

Code	Description	
S1	Assembled to one Rosemount Seal	★

Remote seal diaphragm coating

Code	Description	
SZ	0.0002-in. (5 µm) gold-plated diaphragm	
FP[1]	CorrosionShield™ PFA coated diaphragm	

(1) *Not compatible with spiral wound gasket.*

Product certifications

Code	Description	
E8	ATEX Flameproof	★
I1[1]	ATEX Intrinsic Safety	★
IA	ATEX FISCO Intrinsic Safety; for FOUNDATION™ Fieldbus or PROFIBUS® PA Protocol only	★
N1	ATEX Type n Certification	★
K8	ATEX Flameproof, Intrinsic Safety, Type n, Dust (combination of E8, I1 and N1)	★
E4[2]	Japan Flameproof	★
E5	USA Explosion-proof, Dust Ignition-proof	★
I5[3]	USA Intrinsically Safe, Nonincendive	★
K5	USA Explosion-proof, Dust Ignition-proof, Intrinsically Safe, and Division 2	★
E6	Canada Explosion-proof, Dust Ignition-proof, Division 2	★
I6	Canada Intrinsic Safety	★
C6	Canada Explosion-proof, Dust Ignition-proof, Intrinsically Safe, and Division 2	★
K6	Canada and ATEX Explosion-proof, Intrinsically Safe, and Division 2 (combination of C6, E8, and I1)	★
E7	IECEx Flameproof	★
I7	IECEx Intrinsic Safety	★
N7	IECEx Type n Certification	★
K7	IECEx Flameproof, Dust Ignition-proof, Intrinsic Safety, and Type n (combination of I7, N7, and E7)	★
IG	IECEx FISCO Intrinsically Safe; for FOUNDATION Fieldbus or PROFIBUS PA Protocols only	★
E2	Brazil Flameproof	★

I2	Brazil Intrinsic Safety	★
IB	Brazil FISCO intrinsically safe; for FOUNDATION Fieldbus or PROFIBUS PA Protocols only	★
K2	Brazil Flameproof, Intrinsic Safety	★
E3	China Flameproof	★
I3	China Intrinsic Safety	★
EM	Technical Regulations Customs Union (EAC) Flameproof	★
IM	Technical Regulations Customs Union (EAC) Intrinsic Safety	★
KM	Technical Regulations Customs Union (EAC) Flameproof and Intrinsic Safety	★
KB	USA and Canada Explosion-proof, Dust Ignition-proof, Intrinsically Safe, and Division 2 (combination of K5 and C6)	★
KD	USA, Canada, and ATEX Explosion-proof, Intrinsically Safe (combination of K5, C6, I1, and E8)	★
KL(4)	USA, Canada, IECEx, ATEX Intrinsic Safety Combination	★
KS	USA, Canada, IECEx, ATEX Explosion-proof, Intrinsically Safe, Dust, Non-Incendive, Type-N, Div. 2	★
EP	Republic of Korea Flameproof	★
IP	Republic of Korea Intrinsic Safety	★
KP	Republic of Korea Flameproof, Intrinsic Safety	★

(1) *Dust approval not applicable to wireless (output code X). See Rosemount 2051 Wireless Product Certifications for wireless approvals.*
(2) *Only available with 4-20 mA HART®(output code A), FOUNDATION™ Fieldbus (output code F), or PROFIBUS®PA (output code W). Only available with aluminum housing and G½ conduit entry size (housing material code D).*
(3) *Nonincendive certification not provided with wireless (output code X).*
(4) *Only available with wireless (output code X).*

Shipboard approvals

Not available with wireless output (code X).

Code	Description	
SBS	American Bureau of Shipping	★
SBV(1)	Bureau Veritas (BV)	★
SDN	Det Norske Veritas	★
SLL(1)	Lloyds Register (LR)	★

(1) *Only available with product certifications E7, E8, I1, I7, IA, K7, K8, KD, N1, and N7.*

Bolting material

Code	Description	
L4	Austenitic 316 SST bolts	★
L5	ASTM A 193, grade B7M bolts	★
L6	Alloy K-500 Bolts	★
L8	ASTM A 193 Class 2, grade B8M bolts	★

Display and interface options

M5	Description	
M6(1)	Graphical LCD display	★
M5	LCD display	★

M4[2]	LCD display with LOI	★

(1) *Only available with 4-20 mA HART® output (code A).*
(2) *Only available with 4-20 mA HART® output (code A) and PROFIBUS®-PA (code W).*

Calibration certificate

Code	Description	
Q4	Calibration certificate	★
QP	Calibration certification and tamper evident seal	★

Material traceability certification

Code	Description	
Q8	Material traceability certification per EN 10204 3.1	★

Positive material identification (PMI)

Code	Description	
Q76	PMI verification and certificate	★

Quality certification for safety

The quality certification for safety is only available with HART® 4–20 mA output (code A).

Code	Description	
QT	Safety certified to IEC 61508 with certificate of FMEDA	★

Total system performance reports

Code	Description	
QZ	Remote seal system performance calculation report	★

Conduit electrical connector

The conduit electrical connector option is not available with wireless output (code X).

Code	Description	
GE	M12, 4-pin, male connector (eurofast®)	★
GM	A size mini, 4-pin, male connector (minifast®)	★

Enhanced safety

Only available with HART 4-20 mA output (Code A).

Code	Description	
T9	Enhanced SIS proof testing and logging	★

Configuration buttons

Code	Description	
D1[1]	Quick service buttons	★
D4[2]	Analog zero and span	★
DZ[3]	Digital zero trim	★

(1) *Only available with Graphical LCD Display (code M6).*
(2) *Only available with HART® 4–20 mA (output code A).*
(3) *Only available with HART 4–20 mA (output code A) and wireless (output code X).*

Transient protection

The transient protection option is not available with wireless (output code X). The T1 option is not needed with FISCO Product Certifications; transient protection is included in the FISCO product certification codes IA, IB, and IE.

Code	Description	
T1	Transient protection terminal block	★

Software configuration

The software configuration option is only available with HART® 4–20 mA (output code A) and wireless (output code X).

Code	Description	
C1	Custom software configuration (For wired, see the Rosemount 3051 Configuration Data Sheet. For wireless, see the Rosemount 3051 Wireless Configuration Data Sheet.)	★

Low power output

Code	Description	
C2	0.8–3.2 Vdc output with digital signal based on HART Protocol (available with output code M only)	★

Alarm levels

The alarm levels option is only available with HART 4–20 mA output (code A).

Code	Description	
C4[1]	Analog output levels compliant with NAMUR recommendation NE 43, alarm high	★
CN[1]	Analog output levels compliant with NAMUR recommendation NE 43, alarm low	★
CR	Custom alarm and saturation signal levels, high alarm (requires C1)	★
CS	Custom alarm and saturation signal levels, low alarm (requires C1)	★
CT	Rosemount standard low alarm	★

(1) *NAMUR-compliant operation is preset at the factory and can be changed to standard operation in the field for the standard Rosemount 3051.*

Conduit plug

The conduit plug option is not available with wireless output (code X).

Code	Description	
DO	316 SST conduit plug	★

Ground screw

The ground screw option is not available with wireless output (code X). The V5 option is not needed with the T1 option; external ground screw assembly is included with the T1 option.

Code	Description	
V5	External ground screw assembly	★

Lower housing flushing connection options

Code	Ring material	Number	Size (NPT)	
F1	316 SST	1	¼–18 NPT	★
F2	316 SST	2	¼–18 NPT	★
F3	Alloy C-276	1	¼–18 NPT	★
F4	Alloy C-276	2	¼–18 NPT	★
F7	316 SST	1	½–14 NPT	★
F8	316 SST	2	½–14 NPT	★
F9	Alloy C-276	1	½–14 NPT	★
F0	Alloy C-276	2	½–14 NPT	★
FV	Assemble to Rosemount 319 Flushing Ring			★

Lower housing intermediate gasket material

Code	Description	
S0	No gasket for lower housing	★
SY(1)	Klingersil C-4401 gasket	★

(1) *Gasket provided when lower housing is ordered.*

NACE certificate

Note that NACE®-compliant wetted materials are required. Materials of construction must comply with recommendations per NACE MR0175/ISO 15156 for sour oil field production environments. Environmental limits apply to certain materials. Consult the latest standard for details. All selected materials must also conform to NACE MR0103 for sour refining environments.

Code	Description	
Q15	Certificate of Compliance to NACE MR0175/ISO 15156 for wetted materials	★
Q25	Certificate of Compliance to NACE MR0103 for wetted materials	★

Enhanced software

Enhanced software enables application specific configuration, expanded process alerts, and logging capabilities.

Code	Description	
RK	Enhanced software	★

Wireless power accessory

This option is only available with wireless output (code X).

Code	Description	
HS	Hot swap power adapter for power module replacement	

Rosemount 2051L Liquid Level Transmitter



- Designed with a variety of process connections, materials and output protocols to meet diverse application requirements
- Tuned-System Level assembly and direct mounting produce optimal performance for level applications
- SIL 2/3 certified to IEC 61508 (via 3rd party) and prior-use certificate of FMEDA data for safety installations
- Local Operator Interface (LOI) for simple, local commissioning on-site without the use of extra tools or training
- Optimized seal system construction ensures a quality measurement in harsh process conditions

CONFIGURE > VIEW PRODUCT >

Online product configurator

Many products are configurable online using our Product Configurator. Select the **Configure** button above or visit our website to start. With this tool's built-in logic and continuous validation, you can configure your products more quickly and accurately.

Specifications and options

See the Specifications and options section for more details on each configuration. Specification and selection of product materials, options, or components must be made by the purchaser of the equipment. See the Material selection section for more information.

Sizing and Selection Body

All Rosemount flow meters can be sized to meet your application specific requirements in the DP Flow sizing and selection tool. This tool will verify if a selected product meets your application requirements, provide a comparison between different primary elements, and generate a detailed accuracy comparison graph.

Once a sizing is completed, the configuration tool will help create a complete and valid model code to match your requirements and include any additional options or approvals.

Optimizing lead time

The starred offerings (★) represent the most common options and should be selected for the fastest delivery times. The non-starred offerings are subject to additional delivery lead time.

Required model components

Model

Code	Description	
2051L	Liquid level transmitter	★

Pressure range

Code	Description	
2	–250 to 250 inH_2O (–623 to 623 mbar)	★
3	–1000 to 1000 inH_2O (–2.5 to 2.5 bar)	★
4	–300 to 300 psi (–20.7 to 20.7 bar)	★

Transmitter output

Code	Description	
A(1)	4–20 mA with digital signal based on HART® Protocol	★
F	FOUNDATION™ Fieldbus Protocol	
W (2)	PROFIBUS® PA Protocol	★
X(3)	Wireless	★
M(4)	Low-power, 1–5 Vdc with digital signal based on HART Protocol	

(1) *HART Revision 5 is the default HART output. The Rosemount 2051 with Selectable HART can be factory or field configured to HART Revision 7. To order HART Revision 7 factory configured, add option code HR7.*
(2) *For local addressing and configuration, M4 (LOI) is required. Not available with product certification codes E4, EM, EP, I6, IM, KD, KL, KM, KP, KS, N3.*
(3) *Only available with intrinsically safe approvals.*
(4) *Only available with Housing Codes A and J and with C6, E2,E5, I5, K5, EM, EP, KB, and E8 product certifications.*

Process connection size

Code	Description	Diaphragm	
G(1)	2-in./DN 50	316L SST	★
H(1)	2-in./DN 50	Alloy C-276	★
J	2-in./DN 50	Tantalum	★
A(1)	3-in./DN 80	316L SST	★
B(1)	4-in./DN 100	316L SST	★
C(1)	3-in./DN 80	Alloy C-276	★
D(1)	4-in./DN 100	Alloy C-276	★
E	3-in./DN 80	Tantalum	★
F	4-in./DN 100	Tantalum	★

(1) *Materials of construction comply with metallurgical requirements highlighted within NACE MR0175/ISO 15156 for sour oil field production environments. Environmental limits apply to certain materials. Consult latest standard for details. Selected materials also conform to NACE ®MR0103 for sour refining environments. Order with Q15 or Q25 to receive a NACE certificate.*

Extension length

Code	Description	
0	None, flush mount	★
2	2-in./50 mm	★
4	4-in./100 mm	★
6	6-in./150 mm	★

Mounting flange size rating, material (high size)

Code	Description	Rating	Material	
M	2-in.	ASME B16.5 Class 150	CS	★
A	3-in.		CS	★
B	4-in.		CS	★
N	2-in.	ASME B16.5 Class 300	CS	★
C	3-in.		CS	★
D	4-in.		CS	★
X(1)	2-in.	ASME B16.5 Class 150	SST	★
F(1)	3-in.		SST	★
G(1)	4-in.		SST	★
Y(1)	2-in.	ASME B16.5 Class 300	SST	★
H(1)	3-in.		SST	★
J(1)	4-in.		SST	★
Q	DN 50	PN 10-40 per EN 1092-1	CS	★
R	DN 80	PN 40 per EN 1092-1	CS	★
K	DN 50	PN 10-40 per EN 1092-1	SST	★
T	DN 80	PN 40 per EN 1092-1	SST	★

(1) *Materials of construction comply with metallurgical requirements highlighted within NACE MR0175/ISO 15156 for sour oil field production environments. Environmental limits apply to certain materials. Consult latest standard for details. Selected materials also conform to NACE ®MR0103 for sour refining environments. Order with Q15 or Q25 to receive a NACE certificate.*

Seal fill fluid (high side)

Code	Seal fill fluid (high side)	Specific gravity at 77 °F (25 °C)	Temperature limits (ambient temperature of 70 °F [21 °C])	
A	SYLTHERM™ XLT	0.085	–157 to 293 °F (–105 to 145 °C)	★
C	Silicone 704	1.07	32 to 401 °F (0 to 205 °C)	★
D	Silicone 200	0.93	–49 to 401 °F (–45 to 205 °C)	★
F	Silicone 200 for vacuum applications limits: For use in vacuum applications below 14.7 psia (1 bar-a), refer to vapor pressure curves in Rosemount DP Level Fill Fluid Specification Technical Note.			
H	Inert (halocarbon)	1.85	5 to 401 °F (–15 to 205 °C)	★
G	Glycerin and water	1.13	–49 to 320 °F (–45 to 160 °C)	★

Code	Seal fill fluid (high side)	Specific gravity at 77 °F (25 °C)	Temperature limits (ambient temperature of 70 °F [21 °C])	
L	Silicone 200 for vacuum applications limits: For use in vacuum applications below 14.7 psia (1 bar-a), refer to vapor pressure curves in Rosemount DP Level Fill Fluid Specification Technical Note.			
N	Neobee® M-20	0.92	5 to 401 °F (–15 to 205 °C)	★
P	Propylene glycol and water	1.02	5 to 203 °F (–15 to 95 °C)	★

Sensor module configuration, flange adapter (low side)

Code	Configuration	Flange adapter	
1	Gauge	SST	★
2	Differential	SST	★
3(1)	Tuned-System™ with remote seal	None	★

(1) *Requires option code S1.*

Sensor module diaphragm, sensor fill fluid (low side)

Code	Diaphragm material	Sensor fill fluid	
1	316L SST	Silicone	★
2	Alloy C-276 (SST valve seat)		★
7	Alloy C-276 (alloy C-276 valve seat)		★
A(1)	316L SST	Inert (halocarbon)	★
B(1)(2)	Alloy C-276 (SST valve seat)		★
G(1)	Alloy C-276 (alloy C-276 valve seat)		★

(1) *Not available with output code X.*
(2) *Materials of construction comply with metallurgical requirements highlighted within NACE MR0175/ISO 15156 for sour oil field production environments. Environmental limits apply to certain materials. Consult latest standard for details. Selected materials also conform to NACE MR0103 for sour refining environments. Order with Q15 or Q25 to receive a NACE certificate.*

O-ring

Code	Description	
A	Glass-filled PTFE	★

Housing material

Code	Description	Conduit entry size	
A	Aluminum	½–14 NPT	★
B	Aluminum	M20 x 1.5	★
E	Aluminum, ultra low copper	½–14 NPT	★
F	Aluminum, ultra low copper	M20 x 1.5	★
J	SST	½–14 NPT	★
K	SST	M20 x 1.5	★
P(1)	Engineered polymer	No conduit entries	★

D[2]	Aluminum	G½	★
M[2]	SST	G½	

(1) *Only available with output code X.*
(2) *Transmitter conduit entry will be ½ NPT and a ½ NPT to G½ thread adapter will be provided. This option is only available with product certifications options I1, I2, I3, I7, IA, IB, IM, KA, N1, N3, N7. Housing code D is also available with E4, and IG.*

Wireless options

Requires wireless output code X and engineered polymer housing code P.

Wireless transmit rate, operating frequency and protocol

Code	Description	
WA3	User configurable transmit rate, 2.4 GHz *Wireless*HART® Protocol	★

Antenna and SmartPower™

Code	Description	
WP5	Internal antenna, compatible with Green Power Module (I.S. Power Module sold separately)	★

Additional options

Extended product warranty

Code	Description	
WR3	3-year limited warranty	★
WR5	5-year limited warranty	★

Plantweb™ control functionality

This option is only valid with FOUNDATION™ Fieldbus output code F.

Code	Description	
A01	FOUNDATION Fieldbus advanced control function block suite	★

Seal assemblies

“Assemble-to” items are specified separately and require a completed model number.

Code	Description	
S5	Assemble to one Rosemount diaphragm seal	★

Remote seal diaphragm coating

Code	Description	
SZ	0.0002-in. (5 µm) gold-plated diaphragm	
FP[1]	CorrosionShield™ PFA coated diaphragm	

(1) *Not compatible with spiral wound gasket.*

Product certifications

Code	Description	
E8	ATEX Flameproof	★
I1[1]	ATEX Intrinsic Safety	★
IA	ATEX FISCO Intrinsic Safety; for FOUNDATION™ Fieldbus or PROFIBUS® PA Protocol only	★
N1	ATEX Type n Certification	★
K8	ATEX Flameproof, Intrinsic Safety, Type n, Dust (combination of E8, I1 and N1)	★
E4[2]	Japan Flameproof	★
E5	USA Explosion-proof, Dust Ignition-proof	★
I5[3]	USA Intrinsically Safe, Nonincendive	★
K5	USA Explosion-proof, Dust Ignition-proof, Intrinsically Safe, and Division 2	★
E6	Canada Explosion-proof, Dust Ignition-proof, Division 2	★
I6	Canada Intrinsic Safety	★
C6	Canada Explosion-proof, Dust Ignition-proof, Intrinsically Safe, and Division 2	★
K6	Canada and ATEX Explosion-proof, Intrinsically Safe, and Division 2 (combination of C6, E8, and I1)	★
E7	IECEx Flameproof	★
I7	IECEx Intrinsic Safety	★
N7	IECEx Type n Certification	★
K7	IECEx Flameproof, Dust Ignition-proof, Intrinsic Safety, and Type n (combination of I7, N7, and E7)	★
IG	IECEx FISCO Intrinsically Safe; for FOUNDATION Fieldbus or PROFIBUS PA Protocols only	★
E2	Brazil Flameproof	★
I2	Brazil Intrinsic Safety	★
IB	Brazil FISCO intrinsically safe; for FOUNDATION Fieldbus or PROFIBUS PA Protocols only	★
K2	Brazil Flameproof, Intrinsic Safety	★
E3	China Flameproof	★
I3	China Intrinsic Safety	★
EM	Technical Regulations Customs Union (EAC) Flameproof	★
IM	Technical Regulations Customs Union (EAC) Intrinsic Safety	★
KM	Technical Regulations Customs Union (EAC) Flameproof and Intrinsic Safety	★
KB	USA and Canada Explosion-proof, Dust Ignition-proof, Intrinsically Safe, and Division 2 (combination of K5 and C6)	★
KD	USA, Canada, and ATEX Explosion-proof, Intrinsically Safe (combination of K5, C6, I1, and E8)	★
KL[4]	USA, Canada, IECEx, ATEX Intrinsic Safety Combination	★
KS	USA, Canada, IECEx, ATEX Explosion-proof, Intrinsically Safe, Dust, Non-Incendive, Type-N, Div. 2	★

EP	Republic of Korea Flameproof	★
IP	Republic of Korea Intrinsic Safety	★
KP	Republic of Korea Flameproof, Intrinsic Safety	★

(1) *Dust approval not applicable to wireless (output code X). See Rosemount 2051 Wireless Product Certifications for wireless approvals.*
(2) *Only available with 4-20 mA HART®(output code A), FOUNDATION™ Fieldbus (output code F), or PROFIBUS® PA (output code W). Only available with aluminum housing and G½ conduit entry size (housing material code D).*
(3) *Nonincendive certification not provided with wireless (output code X).*
(4) *Only available with wireless (output code X).*

Shipboard approvals

Shipboard approvals are not available with wireless output (code X).

Code	Description	
SBS	American Bureau of Shipping	★
SBV	Bureau Veritas (BV)	★
SDN	Det Norske Veritas	★
SLL	Lloyds Register (LR)	★

Display and interface options

Code	Description	
M4(1)	LCD display with LOI	★
M5	LCD display	★

(1) *Not available with FOUNDATION™ Fieldbus (output code F) or wireless (output code X).*

Flange adapters

This option is not valid with alternate process connection options S3, S4, S5, or S6.

Code	Description	
DF	½–14 NPT flange adapters	★

Conduit plug

Code	Description	
DO	316 SST conduit plug	★

Ground screw

The V5 option is not needed with the T1 option; external ground screw assembly is included with the T1 option.

Code	Description	
V5	External ground screw assembly	★

Transient protection

Not available with output code X. Not valid with FOUNDATION™ Fieldbus output code F and wireless output code X. The T1 option is not needed with FISCO Product Certifications; transient protection is included in the FISCO product certification codes IA, E, IF, and IG.

Code	Description	
T1	Transient terminal block	★

Software configuration

Only available with 4–20 mA HART output (codes A) and wireless output (code X).

Code	Description	
C1	Custom software configuration (requires completed Configuration Data Sheet)	★

Alarm limit

Only available with 4–20 mA HART (output codes A and M).

Code	Description	
C4(1)	NAMUR alarm and saturation levels, high alarm	★
CN(1)	NAMUR alarm and saturation levels, low alarm	★
CR	Custom alarm and saturation signal levels, high alarm (requires C1 and Configuration Data Sheet)	★
CS	Custom alarm and saturation signal levels, low alarm (requires C1 and Configuration Data Sheet)	★
CT	Low alarm (standard Rosemount alarm and saturation levels)	★

(1) *NAMUR-Compliant operation is pre-set at the factory.*

Calibration certification

Code	Description	
Q4	Calibration certificate	★
QG	Calibration certificate and GOST verification certificate	★
QP	Calibration certificate and tamper evident seal	★

Material traceability certification

Code	Description	
Q8	Material traceability certification per EN 10204 3.1	★

Quality certification for safety

The option is only available with 4–20 mA HART® output (code A).

Code	Description	
QS	Prior-use certificate of FMEDA data	★
QZ	Safety certified to IEC 61508 with certificate of FMEDA	★

Total system performance reports

Code	Description	
QZ	Remote seal system performance calculation report	★

Conduit electrical connector

This option is not available with output code X.

Code	Description	
GE	M12, 4-pin, male connector (eurofast®)	★
GM	A size mini, 4-pin, male connector (minifast®)	★

NACE® certificate

NACE Compliant wetted materials are identified by materials of construction that comply with recommendations per NACE MR0175/ISO 15156 for sour oil field production environments. Environmental limits apply to certain materials. Consult latest standard for details. Selected materials also conform to NACE MR0103 for sour refining.

Code	Description	
Q15	Certificate of compliance to NACE MR0175/ISO 15156 for wetted materials	★
Q25	Certificate of compliance to NACE MR0103 for wetted materials	★

Lower housing alignment clamp

Code	Description	
SA	Lower housing alignment clamp	★

Lower housing flushing connection

Code	Ring material	Number	Size (NPT)	
F1	316 SST	1	¼–18 NPT	★
F2	316 SST	2	¼–18 NPT	★
F3(1)	Alloy C-276	1	¼–18 NPT	★
F4(1)	Alloy C-276	2	¼–18 NPT	★
F7	316 SST	1	½–14 NPT	★
F8	316 SST	2	½–14 NPT	★
F9	Alloy C-276	1	½–14 NPT	★
F10	Alloy C-276	2	½–14 NPT	★
FV	Assemble to Rosemount 319 Flushing Ring			★

(1) *Not available with option codes A0, B0, and G0.*

Lower housing intermediate gasket material

Code	Description	
S0	No gasket for lower housing	★

Code	Description	
SY[1]	Klingersil C-4401 gasket	★

(1) *Gasket provided when lower housing is ordered.*

Direct mount seal system ordering information



Rosemount 1199 Direct Mount Seals reduce installation costs by eliminating mounting hardware. Their advanced design also minimizes oil volume improving performance.

Product features and capabilities include:

- Direct mount gauge or absolute seal system can be used for open or vented to atmosphere tank applications
- Tuned-System™ Assembly order codes can be used to improve performance for DP measurements in closed or pressurized tank applications
- Variety of process connections
- Quantified performance for the entire transmitter/seal assembly (QZ option)

Specification and selection of product materials, options, or components must be made by the purchaser of the equipment.

Rosemount 1199 Direct Mount Seal

The Rosemount 1199 Direct Mount Seal also requires specification of a Rosemount pressure device. See the appropriate Product Data Sheet for the desired device and include the option indicated in the table below for the configuration desired.

When ordering direct and remote mount seals, add the correct seal system ordering code to the transmitter or gauge model.

Table 1: Seal Attach To Code Per Transmitter or Gauge Model

Rosemount model	Two seals	One seal
3051S_C	B12	B11
3051C	S2	S1
2051C	S2	S1
3051S_T	N/A	B11
3051T, 3051HT, 2051T, 2051HT, 2088	N/A	S1
WPG, SPG	N/A	S1

A Rosemount 1199 Direct Mount Seal consists of two parts. First, specify the direct mount connection model codes, then specify a remote seal. Model codes for both components are listed in the ordering table.

Online product configurator

Many products are configurable online using our Product Configurator. Select the **Configure** button above or visit our website to start. With this tool's built-in logic and continuous validation, you can configure your products more quickly and accurately.

Specifications and options

See the Specifications and options section for more details on each configuration. Specification and selection of product materials, options, or components must be made by the purchaser of the equipment. See the Material selection section for more information.

Sizing and Selection Body

All Rosemount flow meters can be sized to meet your application specific requirements in the DP Flow sizing and selection tool. This tool will verify if a selected product meets your application requirements, provide a comparison between different primary elements, and generate a detailed accuracy comparison graph.

Once a sizing is completed, the configuration tool will help create a complete and valid model code to match your requirements and include any additional options or approvals.

Optimizing lead time

The starred offerings (★) represent the most common options and should be selected for the fastest delivery times. The non-starred offerings are subject to additional delivery lead time.

Required model components

Model

Code	Description	
1199	Seal systems	★

Connection type, seal type and location

Code	Connection type	Seal system	Seal location	
All coplanar devices (Rosemount 3051S_C, 3051C, and 2051C)				
W	Welded-repairable	One or two seal system	High side of transmitter	★
R[1]	All welded	One seal system	High side of transmitter	★
T[1]	All welded	Two seal system	High side of transmitter	★
All In-line devices (Rosemount 3051S_T, 3051T, 3051HT, 2051T, 2051HT, 2088, WPG and SPG)				
W	All welded	One seal system	N/A	★

(1) *All welded system connection types require either a 316L SST or Alloy C-276 isolating diaphragm in the pressure transmitter model codes.*

Seal fill fluid

Code	Fill fluid	Specific gravity at 77 °F (25 °C)	Temperature limits[1][2]				
			No extension	2-in. (50 mm) extension	4-in. (100 mm) extension	Thermal optimizer	
D	Silicone 200	0.934	–49 to 401 °F (–45 to 205 °C)				★
F	Silicone 200 for vacuum applications	0.934	For use in vacuum applications below 14.7 psia (1 bar-a), refer to vapor pressure curves in Rosemount DP Level Fill Fluid Specification Technical Note.				★
J[3]	Tri-Therm 300	0.795	–40 to 401 °F (–40 to 205 °C)	–40 to 464 °F (–40 to 240 °C)	–40 to 572 °F (–40 to 300 °C)	-40 to 572 °F (-40 to 300°C)	★

Code	Fill fluid	Specific gravity at 77 °F (25 °C)	Temperature limits[1][2]				
			No extension	2-in. (50 mm) extension	4-in. (100 mm) extension	Thermal optimizer	
Q[3]	Tri-Therm 300 for vacuum applications	0.795	For use in vacuum applications below 14.7 psia (1 bar-a), refer to vapor pressure curves in Rosemount DP Level Fill Fluid Specification Technical Note.				★
L	Silicone 704	1.07	32 to 401 °F (0 to 205 °C)	32 to 464 °F (0 to 240 °C)	32 to 572 °F (0 to 300 °C)	32 to 599 °F (0 to 315 °C)	★
C	Silicone 704 for vacuum applications	1.07	For use in vacuum applications below 14.7 psia (1 bar-a), refer to vapor pressure curves in Rosemount DP Level Fill Fluid Specification Technical Note.				★
R	Silicone 705	1.09	68 to 401 °F (20 to 205 °C)	68 to 464 °F (20 to 240 °C)	68 to 572 °F (20 to 300 °C)	68 to 698 °F (20 to 370 °C)	★
V	Silicone 705 for vacuum applications	1.09	For use in vacuum applications below 14.7 psia (1 bar-a), refer to vapor pressure curves in Rosemount DP Level Fill Fluid Specification Technical Note.				★
A[4]	SYLTHERM™ XLT	0.85	–157 to 293 °F (–105 to 145 °C)				★
H[4]	Inert (Halocarbon)	1.85	–49 to 320 °F (–45 to 160 °C)				★
G[3][5]	Glycerine and water	1.13	5 to 203 °F (–15 to 95 °C)				★
N[3][4]	Neobee® M-20	0.94	5 to 401 °F (–15 to 205 °C)	5 to 437 °F (–15 to 225 °C)			★
P[3][5]	Propylene Glycol and water	1.02	5 to 203 °F (–15 to 95 °C)				★

(1) *At ambient pressure of 14.7 psia (1 bar-a) and ambient temperature of 70 °F (21 °C).*
(2) *Due to heat transfer to the transmitter, the maximum ambient temperature will be de-rated if the process temperature exceeds 185 °F (85 °C). Consult application specialist.*
(3) *This is a food grade fill fluid.*
(4) *For use in vacuum applications below 14.7 psia (1 bar-a), refer to vapor pressure curves in Rosemount DP Level Fill Fluid Specification Technical Note.*
(5) *Not suitable for vacuum applications.*

Seal connection type

Code	Description	
A	Direct mount	★

Direct mount connection type

Code	Extension length	Connection type	Seal system	
All coplanar devices (Rosemount 3051S_C, 3051C and 2051C)				
93	Direct mount, no extension	Welded-repairable	Coplanar one-seal system	★
B3	Direct mount, 2-in. (50 mm) extension			★
D3	Direct mount, 4-in. (100 mm) extension			★
97	Direct mount, no extension	All welded		★
B7	Direct mount, 2-in. (50 mm) extension			★
D7	Direct mount, 4-in. (100 mm) extension			★

Code	Extension length	Connection type	Seal system	
94	Direct mount, no extension	Welded-repairable	Tuned-System assembly	★
B4	Direct mount, 2-in. (50 mm) extension			★
D4	Direct mount, 4-in. (100 mm) extension			★
96	Direct mount, no extension	All welded		★
B6	Direct mount, 2-in. (50 mm) extension			★
D6	Direct mount, 4-in. (100 mm) extension			★
All In-line devices (Rosemount 3051S_T, 3051T, 3051HT, 2051T, 2051HT, 2088, WPG, and SPG)				
95	Direct mount, no extension	All welded	In-line one-seal system	★
C5(1)	Direct mount, 4-in. (100 mm) extension			★
D5(1)	Direct mount, Thermal Optimizer			★

(1) *Maximum working pressure is 4000 psi (275 bar). Temperature limits of the Thermal Optimizer can be found in the specification section.*

Seal assemblies

● = Transmitter available– = Unavailable

Table 2: Flanged Seal Assemblies

Reference information		In-line	Coplanar extensions			Process connections	
			0-in.	2-in.	4-in.		
	FFW Flush Flanged Seal	●	–	●	●	2-in./DN 50/50A 3-in./DN 80/80A 4-in./ DN 100/100A	★
	RFW Remote Flanged Seal	●	–	●	●	½-in./DN 15 ¾-in. 1-in./DN 25/25A 1½-in./DN 40/40A	★
	EFW Extended Flanged Seal	●	(1)	●	●	1½-in./DN 40/40A 2-in./DN 50/50A 3-in./Headbox/DN 80/80A 4-in./Headbox/DN 100/100A	★
	FCW Flush Flanged Seal - RTJ gasket surface	●	(1)	●	●	2-in. 3-in.	
	RCW Remote Flange Seal	●	–	●	●	½-in. ¾-in. 1-in. 1½-in.	
	FUV and FVW Flush Flanged Type	●	●	●	●	DN 50 DN 80	

(1) *Available with ANSI Class 300 or EN 1092-1 PN 40 or JIS B2238 20K or lower flange ratings.*

Table 3: Threaded Seal Assemblies

Reference information		In-line	Coplanar extensions			Process connections	
			0-in.	2-in.	4-in.		
	RTW Remote Threaded Seal	•	–	•	•	¼ –18 NPT ⅜ –18 NPT ½ –14 NPT ¾ –14 NPT 1–11½ NPT 1¼–11½ NPT 1½–11½ NPT G½ A DIN 16288 R½ per ISO 7/1	★
	HTS Male Threaded Seal	•	–	•	•	G1 G1½ G2 1–11½ NPT 1½–11½ NPT 2–11½ NPT	

Table 4: Hygienic Seal Assemblies

Reference information		In-line	Coplanar extensions			Process connections	
			0-in.	2-in.	4-in.		
	SCW Hygienic Tri-Clover Style Tri-Clamp	•	•	•	•	1½-in. 2-in. 2½-in. 3-in. 4-in.	
	SSW Hygienic Tank Spud	•	•	•	•	2-in. extension 6-in. extension	
	STW Hygienic Thin Wall Tank Spud Seal	•	–	•	•	0.8-in. extension	
	EES Hygienic Flanged Tank Spud Extended Seal	•	•	•	•	DN 50 DN 80	
	VCS Tri-Clamp In-Line Seal	•	–	–	–	1-in. 1½-in. 2-in. 3-in. 4-in.	
	SVS VARIVENT® Compatible Hygienic Connection Seal	•	•	•	•	Tuchenhagen VARIVENT Compatible	
	SHP Hygienic Cherry-Burrell® "I" Line Seal	•	–	–	–	2-in. 3-in.	

Table 4: Hygienic Seal Assemblies *(continued)*

Reference information		In-line	Coplanar extensions			Process connections	
			0-in.	2-in.	4-in.		
	SLS Dairy Process Connection - female thread seal per DIN 11851	•	–	–	–	DN 40 DN 50	

Table 5: Specialty Seal Assemblies

Reference information		In-line	Coplanar extensions			Process connections	
			0-in.	2-in.	4-in.		
	WSP Saddle Seal	•	–	•	•	2-in. 3-in. 4-in. or larger	
	UCP and PMW Threaded Pipe Mount Seal	•	–	–	–	1½-in. with threaded nut 1-in. with cap screw retainer	
	CTW Chemical Tee Seal	•	–	•	•	Retro-fit	
	TFS Wafer Style In-Line Seal	•	–	–	–	1-in./DN 25 1½-in./DN 40 2-in./DN 50 3-in./DN 80 4-in./DN 100	
	WFW Flow-Through Flanged Seal	•	–	•	•	1-in. 2-in. 3-in.	

Remote mount seal system ordering information



Rosemount 1199 Remote Mount Seals are used commonly at the top of the vessel when a DP measurement is required. The capillary that is used is available in three different diameters to optimize time response and reduce temperature effects.

Product features and capabilities include:

- Remote Mount Seals can be used for high temperature applications.
- Remote Mount Seals are used on the low pressure side of the transmitter for Tuned-System Assemblies that can be used for DP measurements in closed or pressurized tank applications.
- Variety of process connections.
- Quantified performance for the entire transmitter/seal assembly (QZ option).

The purchaser of the equipment must make specification and selection of product materials, options, or components.

Rosemount 1199 Remote Mount Seal

The Rosemount 1199 Remote Mount Seal also requires specification of a Rosemount pressure transmitter. See the appropriate product data sheet for the desired transmitter and include the option indicated in the table below for the configuration desired.

When ordering Rosemount 1199 Direct and Remote Mount Seals, make sure to add the correct seal system ordering code to the transmitter or gauge model.

Table 6: Seal Attach To Code Per Transmitter or Gauge Model

Rosemount model	Two seals	One seal
3051S_C	B12	B11
3051C	S2	S1
2051C	S2	S1
3051S_T	N/A	B11
3051T, 3051HT, 2051T, 2051HT, 2088	N/A	S1
WPG, SPG	N/A	S1

A Rosemount 1199 Remote Mount Seal consists of two parts. First, specify the direct mount connection model codes, then specify a remote seal. Model codes for both components are listed in the ordering table.

Online product configurator

Many products are configurable online using our Product Configurator. Select the **Configure** button above or visit our website to start. With this tool's built-in logic and continuous validation, you can configure your products more quickly and accurately.

Specifications and options

See the Specifications and options section for more details on each configuration. Specification and selection of product materials, options, or components must be made by the purchaser of the equipment. See the Material selection section for more information.

Sizing and Selection Body

All Rosemount flow meters can be sized to meet your application specific requirements in the DP Flow sizing and selection tool. This tool will verify if a selected product meets your application requirements, provide a comparison between different primary elements, and generate a detailed accuracy comparison graph.

Once a sizing is completed, the configuration tool will help create a complete and valid model code to match your requirements and include any additional options or approvals.

Optimizing lead time

The starred offerings (★) represent the most common options and should be selected for the fastest delivery times. The non-starred offerings are subject to additional delivery lead time.

Required model components

Model

Code	Description	
1199	Seal systems	★

Connection type, seal type and location

Code	Connection type	Seal system	Seal location	
All coplanar devices (Rosemount 3051S_C, 3051C, and 2051C)				
W	Welded-repairable	One or two seal system	High side of transmitter	★
M			Low side of transmitter	★
D		Two seal system	Balanced system - identical high and low sides	★
A(1)	All welded, capillary	One seal system	High side of transmitter	★
B(1)		Two seal system		★
C(1)			Low side of transmitter	★
All In-line devices (Rosemount 3051S_T, 3051T, 3051HT, 2051T, 2051HT, 2088, WPG and SPG)				
W	All welded	One seal system	N/A	★

(1) *All welded system connection types require either a 316L SST or Alloy C-276 isolating diaphragm in the pressure transmitter model codes.*

Seal fill fluid

Code	Fill fluid	Specific gravity at 77 °F (25 °C)	Remote mount with capillary temperature limits(1)(2)	
D	Silicone 200	0.934	–49 to 401 °F (–45 to 205 °C)	★
F	Silicone 200 for vacuum applications	0.934	For use in vacuum applications below 14.7 psia (1 bar-a), refer to vapor pressure curves in Rosemount DP Level Fill Fluid Specification Technical Note.	★

Code	Fill fluid	Specific gravity at 77 °F (25 °C)	Remote mount with capillary temperature limits[1][2]	
J[3]	Tri-Therm 300	0.795	–40 to 572 °F (–40 to 300 °C)	★
Q[3]	Tri-Therm 300 for vacuum applications	0.795	For use in vacuum applications below 14.7 psia (1 bar-a), refer to vapor pressure curves in Rosemount DP Level Fill Fluid Specification Technical Note.	★
L[4]	Silicone 704	1.07	32 to 599 °F (0 to 315 °C)	★
C[4]	Silicone 704 for vacuum applications	1.07	For use in vacuum applications below 14.7 psia (1 bar-a), refer to vapor pressure curves in Rosemount DP Level Fill Fluid Specification Technical Note.	★
R[4]	Silicone 705	1.09	68 to 698 °F (20 to 370 °C)	★
V[5]	Silicone 705 for vacuum applications	1.09	For use in vacuum applications below 14.7 psia (1 bar-a), refer to vapor pressure curves in Rosemount DP Level Fill Fluid Specification Technical Note.	★
A[6]	SYLTHERM™ XLT	0.85	–157 to 293 °F (–105 to 145 °C)	★
H[6]	Inert (Halocarbon)	1.85	–49 to 320 °F (–45 to 160 °C)	★
G[3][7]	Glycerine and water	1.13	5 to 203 °F (–15 to 95 °C)	★
N[3][6]	Neobee® M-20	0.94	5 to 437 °F (–15 to 225 °C)	★
P[3][7]	Propylene Glycol and water	1.02	5 to 203 °F (–15 to 95 °C)	★

(1) *At ambient pressure of 14.7 psia (1 bar-a) and ambient temperature of 70 °F (21 °C).*
(2) *Due to heat transfer to the transmitter, the maximum ambient temperature will be de-rated if the process temperature exceed 185 °F (85 °C). Consult application specialist.*
(3) *This is a food grade fill fluid.*
(4) *Only available with Seal Connection Type/Capillary ID, Description Codes C, D,F, G, J, K, N, and P.*
(5) *Only available with Seal Connection Type/Capillary ID, Description Codes D, G, K, and P.*
(6) *For use in vacuum applications below 14.7 psia (1 bar-a), refer to vapor pressure curves in Rosemount DP Level Fill Fluid Specification Technical Note.*
(7) *Not suitable for vacuum applications.*

Seal connection type/capillary ID

Code	Description	
B	0.03-in. (0.711 mm) ID	★
C	0.04-in. (1.092 mm) ID	★
D	0.075-in. (1.905 mm) ID	★
E[1]	0.03-in. (0.711 mm) ID, PVC coated with closed end	★
F[1]	0.04-in. (1.092 mm) ID, PVC coated with closed end	★
G[1]	0.075-in. (1.905 mm) ID, PVC coated with closed end	★
H	0.03-in. (0.711 mm) ID, 4-in. support tube	★
J	0.04-in. (1.092 mm) ID, 4-in. support tube	★
K	0.075-in. (1.905 mm) ID, 4-in. support tube	★

Code	Description	
M[1]	0.03-in. (0.711 mm) ID, PVC coated, 4-in. support tube with closed end	★
N[1]	0.04-in. (1.092 mm) ID, PVC coated, 4-in. support tube with closed end	★
P[1]	0.075-in. (1.905 mm) ID, PVC PVC coated, 4-in. support tube with closed end	★

(1) *PVC coating should not be exposed to temperatures above 212 °F (100 °C) to avoid the possibility of thermal breakdown.*

Capillary length

Code	Description	
01	1.0 ft. (0.3 m)	★
05	5.0 ft. (1.5 m)	★
10	10.0 ft. (3.0 m)	★
15	15.0 ft. (4.5 m)	★
20	20.0 ft. (6.1 m)	★
51	1.6 ft. (0.5 m)	★
52	3.3 ft. (1.0 m)	★
53	4.9 ft. (1.5 m)	★
54	6.6 ft. (2.0 m)	★
55	8.2 ft. (2.5 m)	★
56	9.8 ft. (3.0 m)	★
57	11.5 ft. (3.5 m)	★
58	13.1 ft. (4.0 m)	★
59	16.4 ft. (5.0 m)	★
60	19.7 ft. (6.0 m)	★
25	25.0 ft. (7.6 m)	
30	30.0 ft. (9.1 m)	
35	35.0 ft. (10.7 m)	
40	40.0 ft. (12.2 m)	
45	45.0 ft. (13.7 m)	
50	50.0 ft. (15.2 m)	
61	23.0 ft. (7.0 m)	
62	26.2 ft. (8.0 m)	
63	29.5 ft. (9.0 m)	
64	32.8 ft. (10.0 m)	
65	36.1 ft. (11.0 m)	
66	39.4 ft. (12.0 m)	
67	42.6 ft. (13.0 m)	
68	45.9 ft. (14.0 m)	
69	49.2 ft. (15.0 m)	

Seal assemblies

Table 7: Flanged Seal Assemblies

Reference information		Process connections	
	FFW Flush Flanged Seal	2-in./DN 50/50A 3-in./DN 80/80A 4-in./ DN 100/100A	★
	RFW Remote Flanged Seal	½-in./DN 15 ¾-in. 1-in./DN 25/25A 1½-in./DN 40/40A	★
	EFW Extended Flanged Seal	1½-in./DN 40/40A 2-in./DN 50/50A 3-in./Headbox/DN 80/80A 4-in./Headbox/DN 100/100A	★
	PFW Pancake Seal	2-in./DN 50 3-in./DN 80	★
	FCW Flush Flanged Seal - RTJ gasket surface	2-in. 3-in.	
	RCW Remote Flange Seal	½-in. ¾-in. 1-in. 1½-in.	
	FUV and FVW Flush Flanged Type	DN 50 DN 80	

Table 8: Threaded Seal Assemblies

Reference information		Process connections	
	RTW Remote Threaded Seal	¼ –18 NPT ⅜ –18 NPT ½ –14 NPT ¾ –14 NPT 1–11½ NPT 1¼–11½ NPT 1½–11½ NPT G½ A DIN 16288 R½ per ISO 7/1	★
	HTS Male Threaded Seal	G1 G1½ G2 1–11½ NPT 1½–11½ NPT 2–11½ NPT	

Table 9: Hygienic Seal Assemblies

Reference information		Process connections	
	SCW Hygienic Tri-Clover Style Tri-Clamp	1½-in. 2-in. 2½-in. 3-in. 4-in.	
	SSW Hygienic Tank Spud	2-in. extension 6-in. extension	
	STW Hygienic Thin Wall Tank Spud Seal	0.8-in. extension	
	EES Hygienic Flanged Tank Spud Extended Seal	DN 50 DN 80	
	VCS Tri-Clamp In-Line Seal	1-in. 1½-in. 2-in. 3-in. 4-in.	
	SVS VARIVENT® Compatible Hygienic Connection Seal	Tuchenhagen VARIVENT compatible	
	SHP Hygienic Cherry-Burrell® “I” Line Seal	2-in. 3-in.	
	SLS Dairy Process Connection - female thread seal per DIN 11851	DN 40 DN 50	

Table 10: Specialty Seal Assemblies

Reference information		Process connections	
	WSP Saddle Seal	2-in. 3-in. 4-in. or larger	
	UCP and PMW Threaded Pipe Mount Seal	1½-in. with threaded nut 1-in. with cap screw retainer	
	CTW Chemical Tee Seal	Retro-fit	
	TFS Wafer Style In-Line Seal	1-in./DN 25 1½-in./DN 40 2-in./DN 50 3-in./DN 80 4-in./DN 100	

Table 10: Specialty Seal Assemblies *(continued)*

Reference information		Process connections	
	WFW Flow-Through Flanged Seal	1-in. 2-in. 3-in.	

Flanged seals

Optimizing lead time

The starred offerings (★) represent the most common options and should be selected for the fastest delivery times. The non-starred offerings are subject to additional delivery lead time.

FFW Flush Flanged Seal



The starred offerings (★) represent the most common options and should be selected for best delivery. The non-starred offerings are subject to additional delivery lead time.

Required model components

Industry standards

Code	Description	
A	ASME B16.5 (American Society of Mechanical Engineers)	★
D	EN 1092-1 (European standard)	★
T	GOST 33259-15 (Russian standard)	★
J	JIS B2238 (Japanese Industrial Standard)	
G	HG20615 (Chinese Standard based on ASME B16.5)	
K	HG20592 (Chinese Standard based on EN 1092-1)	

Process connection style

Code	Description	
FFW	Flush flanged seal	★

Process connection size

Code	ASME B16.5	EN 1092-1/GOST 33259-15	JIS B2238	
G	2-in.	DN 50	50 A	★
7	3-in.	N/A	80 A	★
J	N/A	DN 80	N/A	
9	4-in.	DN 100	100 A	

Flange/pressure rating

Code	ASME B16.5	EN 1092-1/GOST 33259-15	JIS B2238	
1	Class 150	N/A	10K	★
2	Class 300	N/A	20K	★
4	Class 600	N/A	40K	★
G	N/A	PN 40	N/A	★

Code	ASME B16.5	EN 1092-1/GOST 33259-15	JIS B2238	
E	N/A	PN 10/16 (DN 100 only)	N/A	
5	Class 900	N/A	N/A	
6	Class 1500	N/A	N/A	
7	Class 2500	N/A	N/A	
H	N/A	PN 63	N/A	
J	N/A	PN 100	N/A	
K	N/A	PN 160	N/A	

Diaphragm and wetted, upper housing, flange material

Code	Diaphragm and wetted	Upper housing	Flange	
CA(1)(2)	316L SST	316L SST	CS	★
DA(2)	316L SST	316L SST	316 SST	★
CB(1)	Alloy C-276, seam welded	316L SST	CS	★
DB	Alloy C-276, seam welded	316L SST	316 SST	★
DC	Tantalum, seam welded	316L SST	316 SST	★
C3(1)(2)(3)(4)	Tantalum, brazed	316L SST	CS	★
D3(1)(2)(3)(4)	Tantalum, brazed	316L SST	316 SST	★
MB(1)(2)	Alloy C-276, solid faceplate	Alloy C-276/316L SST	CS	
KB(1)(2)	Alloy C-276, solid faceplate	Alloy C-276/316L SST	316 SST	
DJ	Alloy B, seam welded	316L SST	316 SST	
DF	304L SST, seam welded	316L SST	316 SST	
DV	Alloy 400, seam welded	316L SST	316 SST	
RH(2)(5)	Titanium Gr. 4	Titanium Gr.4	316 SST	
DH(6)	Titanium Gr. 4, seam welded	316L SST	316 SST	
DE	Alloy 600, seam welded	316L SST	316 SST	
DP	Nickel 201, seam welded	316L SST	316 SST	
DZ(6)	Zirconium 702, seam welded	316L SST	316 SST	
D4	Alloy C-22, seam welded	316L SST	316 SST	
D6	Duplex 2205 SST	316L SST	316 SST	
CP	Nickel 201	316L SST	CS	
CV	Alloy 400	316L SST	CS	
CH(6)	Titanium Gr. 4	316L SST	CS	
C6	Duplex 2205 SST	316L SST	CS	
D5	Duplex 2507 SST	316L SST	316 SST	
C5	Duplex 2507 SST	316L SST	CS	

(1) *Only available with two-piece design.*
(2) *For use with spiral wound metallic gaskets.*
(3) *Not available with option code C.*
(4) *Only available in Process Connection Size code G, 7, and J.*
(5) *Not available with welded capillary connections or direct mount.*
(6) *Operating temperature limited to 302 °F (150 °C).*

Flushing connection ring material (lower housing)

If no intermediate gasket material is selected, a Klingersil C-4401 gasket will be supplied.

Lower housings are shipped loose and are not included in option P1 for hydrostatic pressure testing.

Code	Description	
0	None	★
A	316L SST	★
B	Alloy C-276	★
2	Duplex 2205 SST	
H	Titanium Gr. 4	
6	Nickel 201	
V	Alloy 400	

Flushing connections (connection size)

Code	Description	
0	None	★
1	One connection (¼–18 NPT)	★
3	Two connections (¼–18 NPT)	★
7	One connection (½–14 NPT)	★
9	Two connections (½–14 NPT)	★
Y	Assemble to Rosemount 319 Flushing Ring	★

Additional options

Extended product warranty

Code	Description	
WR3	3-year limited warranty	★
WR5	5-year limited warranty	★

Intermediate gasket material

Code	Description	
0	No gasket for flushing connection ring (lower housing)	★
Y	Klingersil C-4401 gasket	★
J	PTFE gasket	★
N	GRAFOIL® gasket	
K	Barium sulfate filled PTFE gasket	

Lower housing alignment clamp

Code	Description	
SA	Lower housing alignment clamp	★

Flushing plug, vent/drain valve

Code	Description	
D	Alloy C-276 plug(s) for flushing connection(s)	★
G	316 SST plug(s) for flushing connection(s)	★
H	316 SST vent/drain for flushing connection(s)	★

Low side drain/vent valve

Required when using connection type option code A assembled to a transmitter with a differential pressure measurement type.

Code	Description	
FV	Low side drain/vent valve	

Diaphragm thickness

Code	Description	
C	0.006-in. (150 µm) available with 316L SST, Alloy C-276, and Duplex 2205 SST for abrasive applications	
7	0.002-in. (50 µm) available with 316L SST and Alloy C-276	

Mounting flange

The mounting flange and upper housing are a single item for the one-piece design. This option is only available with diaphragm and wetted part material codes DA, DB, DJ, DF, DV, DH, DE, DP, WW, DZ, D4, DC, and D5.

Code	Description	
4	Flat face, flush flanged	

NACE® certificate

Materials of Construction comply with metallurgical requirements highlighted within NACE MR 0175/ISO 15156 for sour oil field production environments. Environmental limits apply to certain materials. Consult latest standard for details. Selected materials also conform to NACE MR 0103 for sour refining environments.

Code	Description	
Q15	Certificate of compliance to NACE MR0175/ISO 15156 for wetted materials	★
Q25	Certificate of compliance to NACE MR0103 for wetted materials	★

Gasket surface finish

Code	Description	
1	Gasket surface Ra 125 Max./EN 1092-1 Type B2	

Cold temperature application

Code	Description	
B	Extra fill for cold temp application	★

Diaphragm coating

This option is only available on 316L SST, Alloy 400 and Alloy C-276.

Code	Description	
Z	0.0002-in. (5 µm) gold plated diaphragm	
V	PTFE coated diaphragm for nonstick purposes only	

SensorShield™ diaphragm coating

This option is not compatible with spiral wound gaskets.

Code	Description	
FP	CorrosionShield™ PFA coated diaphragm	

Capillary weld corrosion protection

Code	Description	
FB	Environmental corrosion protection for capillary welds	

Capillary change

Code	Description	
2	Radial capillary connection	

Alternate design

Code	Description	
E	One-piece design	★

Positive Material Identification (PMI)

Code	Description	
Q76	PMI Verification and Certificate	

RFW Remote Flanged Seal



Specification and selection of product materials, options, or components must be made by the purchaser of the equipment.

Required model components

Industry standards

Code	Description	
A	ASME B16.5 (American Society of Mechanical Engineers)	★
D	EN 1092-1 (European standard)	★
T	GOST 33259-15 (Russian standard)	★
J	JIS B2238 (Japanese Industrial Standard)	
G	HG20615 (Chinese Standard based on ASME B16.5)	

Code	Description	
K	HG20592 (Chinese Standard based on EN 1092-1)	

Process connection style

Code	Description	
RFW	Flanged seal	★

Process connection size

Code	ASME B16.5	EN 1092-1/GOST 33259-15	JIS B2238	
2	1-in.	N/A	25A	★
4	1½-in.	N/A	40A	★
D	N/A	DN 25	N/A	★
F	N/A	DN 40	N/A	★
1	½-in.	N/A	N/A	
A	¾-in.	DN 10	10A	
B	N/A	DN 15	15A	
C	N/A	DN 20	20A	

Flange/pressure rating

Code	ASME B16.5	EN 1092-1/GOST 33259-15	JIS B2238	
1	Class 150	N/A	10K	★
2	Class 300	N/A	20K	★
4	Class 600	N/A	40K	★
G	N/A	PN 40	N/A	★
5	Class 900	N/A	N/A	
6	Class 1500	N/A	N/A	
7	Class 2500	N/A	N/A	
C	N/A	PN 6	N/A	
H	N/A	PN 63	N/A	
J	N/A	PN 100	N/A	
K	N/A	PN 160	N/A	

Diaphragm, upper housing, flange material

Code	Diaphragm	Upper housing	Flange	
CA[(1)]	316L SST	316L SST	CS	★
DA	316L SST	316L SST	316 SST	★
CB[(1)]	Alloy C-276	316L SST	CS	★
DB	Alloy C-276	316L SST	316 SST	★
CC[(1)]	Tantalum	316L SST	CS	★

Code	Diaphragm	Upper housing	Flange	
DC	Tantalum	316L SST	316 SST	★
DF	304L SST	316L SST	316 SST	
DJ	Alloy B	316L SST	316 SST	
DE	Alloy 600	316L SST	316 SST	
DV	Alloy 400	316L SST	316 SST	
DP	Nickel 201	316L SST	316 SST	
DK	Alloy 20	316L SST	316 SST	
RH(2)	Titanium Gr. 4	Titanium Gr.4	316 SST	
DH	Titanium Gr. 4	316L SST	316 SST	
D4	Alloy C-22	316L SST	316 SST	
D6	Duplex 2205 SST	316L SST	316 SST	
DZ	Zirconium 702	316L SST	316 SST	
CV(1)	Alloy 400	316L SST	CS	
CP(1)	Nickel 201	316L SST	CS	
D5	Duplex 2507 SST	316L SST	316 SST	
C5	Duplex 2507 SST	316L SST	CS	

(1) *Not available with stud bolt design.*
(2) *Not available with welded capillary connections or direct mount.*

Flushing connection ring material (lower housing)

If no intermediate gasket material is selected, a Klingersil C-4401 aramid fiber gasket will be supplied.

Lower housings are shipped loose and are not included in option P1 for hydrostatic pressure testing.

Code	Description	
A	316L SST	★
B	Alloy C-276	★
2	Duplex 2205 SST	
F	304L SST	
H	Titanium Gr. 4	
V	Alloy 400	
C	Tantalum lined 316L SST (no flushing connection allowed)	

Flushing connections (connection size)

Code	Description	
5	None	
1	One connection (¼–18 NPT)	
3	Two connections (¼–18 NPT)	
7	One connection (½–14 NPT)	
9	Two connections (½–14 NPT)	
Y	Assemble to Rosemount 319 Flushing Ring	★

Additional options

Extended product warranty

Code	Description	
WR3	3-year limited warranty	★
WR5	5-year limited warranty	★

Intermediate gasket material

Code	Description	
Y	Klingersil C-4401 gasket	★
J	PTFE gasket	★
N	GRAFOIL® gasket	
K	Barium sulfate filled PTFE gasket	
R	Ethylene propylene gasket	

Flushing plug, vent/drain valve

Code	Description	
D	Alloy C-276 plug(s) for flushing connection(s)	★
G	316 SST plug(s) for flushing connection(s)	★
H	316 SST vent/drain for flushing connection(s)	★

Low side drain/vent valve

Required when using connection type option code A assembled to a transmitter with a differential pressure measurement type.

Code	Description	
FV	Low side drain/vent valve	

Diaphragm thickness

Code	Description	
C	0.006-in. (150 µm) available with 316L SST, Alloy C-276, and Duplex 2205 SST for abrasive applications	

Bolt material

Note
Default is Tin plated CS.

Code	Description	
3	304 SST bolts (only available for stud bolt design)	
FA	316 SST bolts (only available for stud bolt design)	

Gasket surface finish

Code	Description	
1	Gasket surface Ra 125 Max./EN 1092-1 Type B2	

Cold temperature application

Code	Description	
B	Extra fill for cold temp application	★

Diaphragm coating

This option is only available on 316L SST, Alloy 400 and Alloy C-276.

Code	Description	
Z	0.0002-in. (5 µm) gold plated diaphragm	
V	PTFE coated diaphragm for nonstick purposes only	

SensorShield™ diaphragm coating

This option is not compatible with spiral wound gaskets.

Code	Description	
FP	CorrosionShield™ PFA coated diaphragm	

Large diaphragm size

Code	Description	
9	4.1-in. (104 mm) diaphragm diameter	

NACE® certificate

Materials of Construction comply with metallurgical requirements highlighted within NACE MR 0175/ISO 15156 for sour oil field production environments. Environmental limits apply to certain materials. Consult latest standard for details. Selected materials also conform to NACE MR 0103 for sour refining environments.

Code	Description	
Q15	Certificate of compliance to NACE MR0175/ISO 15156 for wetted materials	★
Q25	Certificate of compliance to NACE MR0103 for wetted materials	★

Capillary weld corrosion protection

Code	Description	
FB	Environmental corrosion protection for capillary welds	

Positive Material Identification (PMI)

Code	Description	
Q76	PMI Verification and Certificate	

EFW Extended Flanged Seal



Specification and selection of product materials, options, or components must be made by the purchaser of the equipment.

The starred offerings (★) represent the most common options and should be selected for best delivery. The non-starred offerings are subject to additional delivery lead time.

Required model components

Industry standards

Code	Description	
A	ASME B16.5 (American Society of Mechanical Engineers)	★
D	EN 1092-1 (European standard)	★
T	GOST 33259-15 (Russian standard)	★
J	JIS B2238 (Japanese Industrial Standard)	
G	HG20615 (Chinese Standard based on ASME B16.5)	
K	HG20592 (Chinese Standard based on EN 1092-1)	

Process connection style

Code	Description	
EFW	Extended flanged seal	★

Process connection size

Code	ASME B16.5	EN 1092-1/GOST 33259-15	JIS B2238	Extension diameters	
7	3-in. (Schedule 80)	DN 80	80A	2.58-in. (66 mm)	★
9	4-in. (Schedule 80)	DN 100	100A	3.50-in. (89 mm)	★
4	1½-in.	DN 40	40A	1.45-in. (37 mm)	
G	2-in.	DN 50	50A	1.90-in. (48 mm)	
R	3-in. (Schedule 40)	DN 80	80A	2.85-in. (72 mm)	
H	3-in. (Headbox)	DN 80 (Headbox)	80A	2.875-in. (73 mm)	
J	3-in.	DN 80	80A	2.99-in. (76 mm)	
T	4-in. (Schedule 40)	DN 100	100A	3.70-in. (94 mm)	
K	4-in. (Headbox)	DN 100 (Headbox)	100A	3.78-in. (96 mm)	

Flange/pressure rating

Code	ASME B16.5	EN 1092-1/GOST 33259-15	JIS B2238	
1	Class 150	–	10K	★
2	Class 300	–	20K	★
4	Class 600	–	40K	★
G	–	PN 40	–	★

Code	ASME B16.5	EN 1092-1/GOST 33259-15	JIS B2238	
E	–	PN 10/16 (DN 100 only)	–	
5	Class 900	–	–	
6	Class 1500	–	–	
7	Class 2500	–	–	
H	–	PN 63	–	
J	–	PN 100	–	
K	–	PN 160	–	

Diaphragm, extension and gasket surface, upper housing, flange material

● = Available, – = Unavailable

Code	Diaphragm	Extension/ gasket surface	Upper housing	Mounting flange	Available with process connection code						
					7	9	4	G	H	K	
DA	316L SST	316L SST	316L SST	316 SST	●	●	●	●	●	●	★
CA	316L SST	316L SST	316L SST	CS	–	●	●	●	●	●	★
DB	Alloy C-276	Alloy C-276	316L SST	316 SST	–	●	●	●	●	●	★
CB	Alloy C-276	Alloy C-276	316L SST	CS	–	●	●	●	●	●	★
DM	Alloy C-276	316L SST	316L SST	316 SST	–	●	●	●	●	●	
DD	Tantalum	316L SST	316L SST	316 SST	●	●	–	–	–	–	
DC(1)	Tantalum	Tantalum lined	316L SST	316 SST	●	●	–	●	–	–	
D6	Duplex 2205 SST	Duplex 2205 SST	316L SST	316 SST	●	●	●	●	●	●	
D7	Duplex 2205 SST	316L SST	316L SST	316 SST	●	●	●	●	●	●	
D5	Duplex 2507 SST	Duplex 2507 SST	316L SST	316 SST	●	●	●	●	●	●	
C5	Duplex 2507 SST	Duplex 2507 SST	316L SST	CS	●	●	●	●	●	●	

(1) *Requires Gasket Surface Finish Code 1, Gasket Surface Finish Ra 125 Max. Available in extension lengths 2-, 4-, and 6-in. Consult factory for all other lengths.*

Extension length

Extension should remain slightly recessed in the nozzle to protect the diaphragm.

Code	ASME B16.5	EN 1092-1/JIS B2238/GOST 33259-15	
2	2-in.	50 mm	★
4	4-in.	100 mm	★
6	6-in.	150 mm	★
8	8-in.	200 mm	★
1	1-in.	25 mm	
3	3-in.	75 mm	
5	5-in.	125 mm	

Code	ASME B16.5	EN 1092-1/JIS B2238/GOST 33259-15	
7	7-in.	175 mm	
9	9-in.	225 mm	

Fractional extension length

Extension should remain slightly recessed in the nozzle to protect the diaphragm.

Code	ASME B16.5	EN 1092-1/JIS B2238/GOST 33259-15	
0	0-in.	0 mm	★
1	⅛-in.	2.5 mm	
2	¼-in.	5 mm	
3	⅜-in.	7.5 mm	
4	½-in.	10 mm	
5	⅝-in.	12.5 mm	
6	¾-in.	15 mm	
7	⅞-in.	17.5 mm	
8	N/A	20 mm	
9	N/A	22.5 mm	

Additional options

Extended product warranty

Code	Description	
WR3	3-year limited warranty	★
WR5	5-year limited warranty	★

Threaded bolt holes in flange

Code	Description	
JA	Threaded jack bolt holes in flange	

Low side drain/vent valve

Required when using connection type option code A assembled to a transmitter with a differential pressure measurement type.

Code	Description	
FV	Low side drain/vent valve	

Diaphragm thickness

Code	Description	
C	0.006-in. (150 µm) available with 316L SST, Alloy C-276, and Duplex 2205 SST for abrasive applications	

NACE® certificate

Materials of Construction comply with metallurgical requirements highlighted within NACE MR 0175/ISO 15156 for sour oil field production environments. Environmental limits apply to certain materials. Consult latest standard for details. Selected materials also conform to NACE MR 0103 for sour refining environments.

Code	Description	
Q15	Certificate of compliance to NACE MR0175/ISO 15156 for wetted materials	★
Q25	Certificate of compliance to NACE MR0103 for wetted materials	★

Gasket surface finish

Code	Description	
1	Gasket surface Ra 125 Max./EN 1092-1 Type B2	

Cold temperature application

Code	Description	
B	Extra fill for cold temp application	★

Diaphragm coating

This option is only available on 316L SST, Alloy 400 and Alloy C-276.

Code	Description	
Z	0.0002-in. (5 µm) gold plated diaphragm	
V	PTFE coated diaphragm for nonstick purposes only	

SensorShield™ diaphragm coating

This option is not compatible with spiral wound gaskets.

Code	Description	
FP	CorrosionShield™ PFA coated diaphragm	

Capillary weld corrosion protection

Code	Description	
FB	Environmental corrosion protection for capillary welds	

Positive Material Identification (PMI)

Code	Description	
Q76	PMI Verification and Certificate	

PFW Pancake Seal



Specification and selection of product materials, options, or components must be made by the purchaser of the equipment.

The starred offerings (★) represent the most common options and should be selected for best delivery. The non-starred offerings are subject to additional delivery lead time.

Required model components

Industry standards

Code	Description	
A	ASME B16.5	★
D	EN 1092-1 (European standard)	★
T	GOST 33259-15 (Russian standard)	★
G	HG20615 (Chinese Standard based on ASME B16.5)	
K	HG20592 (Chinese Standard based on EN 1092-1)	

Process connection style

Code	Description	
PFW	Pancake seal	★

Process connection size

Code	ASME B16.5	EN 1092-1/GOST 33259-15	
G	2-in.	DN 50	★
7	3-in.	N/A	★
J	N/A	DN 80	★

Flange/pressure rating

Code	ASME B16.5	EN 1092-1/GOST 33259-15	
0	No flange supplied, seal MWP based on customer supplied flange	No flange supplied, seal MWP based on customer supplied flange	★
1	Class 150	N/A	★
2	Class 300	N/A	★
4	Class 600	N/A	★
G	N/A	PN 40	★
5	Class 900	N/A	
6	Class 1500	N/A	
7	Class 2500	N/A	
H	N/A	PN 63	
J	N/A	PN 100	

Diaphragm and wetted, upper housing, flange material

Code	Diaphragm and wetted	Upper housing	Flange	
LA[(1)]	316L SST	316L SST	None	★

Code	Diaphragm and wetted	Upper housing	Flange	
CA[1]	316L SST	316L SST	CS	★
DA[1]	316L SST	316L SST	316 SST	★
LB	Alloy C-276, seam welded	316L SST	None	★
CB	Alloy C-276, seam welded	316L SST	CS	★
DB	Alloy C-276, seam welded	316L SST	316 SST	★
LC	Tantalum, seam welded	316L SST	None	
CC	Tantalum, seam welded	316L SST	CS	★
DC	Tantalum, seam welded	316L SST	316 SST	★
L6	Duplex 2205 SST	316L SST	None	
C6	Duplex 2205 SST	316L SST	CS	
D6	Duplex 2205 SST	316L SST	316 SST	
D5	Duplex 2507 SST	316L SST	316 SST	
C5	Duplex 2507 SST	316L SST	CS	
L5	Duplex 2507 SST	316L SST	None	

(1) *For use with spiral wound metallic gaskets.*

Flushing connection ring material (lower housing)

If no intermediate gasket material is selected, a Klingersil C-4401 gasket will be supplied.

Lower housings are shipped loose and are not included in option P1 for hydrostatic pressure testing.

Code	Description	
0	None	★
A	316L SST	★
B	Alloy C-276	★
2	Duplex 2205 SST	
H	Titanium Gr. 4	
6	Nickel 201	
V	Alloy 400	

Flushing connections (connection size)

Code	Description	
0	None	★
1	One connection (¼–14 NPT)	★
3	Two connections (¼–14 NPT)	★
7	One connection (½–14 NPT)	★
9	Two connections (½–14 NPT)	★
Y	Assemble to Rosemount 319 Flushing Ring	★

Additional options

Extended product warranty

Code	Description	
WR3	3-year limited warranty	★
WR5	5-year limited warranty	★

Intermediate gasket material

Code	Description	
0	No gasket for flushing connection ring (lower housing)	★
Y	Klingersil C-4401 gasket	★
J	PTFE gasket	★
N	GRAFOIL® gasket	
K	Barium sulfate filled PTFE gasket	

Lower housing alignment clamp

Code	Description	
SA	Lower housing alignment clamp	

Flushing plug, vent/drain valve

Code	Description	
D	Alloy C-276 plug(s) for flushing connection(s)	★
G	316 SST plug(s) for flushing connection(s)	★
H	316 SST vent/drain for flushing connection(s)	★

Low side drain/vent valve

Required when using connection type option code A assembled to a transmitter with a differential pressure measurement type.

Code	Description	
FV	Low side drain/vent valve	

Diaphragm thickness

Code	Description	
C	0.006-in. (150 µm) available with 316L SST, Alloy C-276, and Duplex 2205 SST for abrasive applications	

NACE® certificate

Materials of Construction comply with metallurgical requirements highlighted within NACE MR 0175/ISO 15156 for sour oil field production environments. Environmental limits apply to certain materials. Consult latest standard for details. Selected materials also conform to NACE MR 0103 for sour refining environments.

Code	Description	
Q15	Certificate of compliance to NACE MR0175/ISO 15156 for wetted materials	★

Code	Description	
Q25	Certificate of compliance to NACE MR0103 for wetted materials	★

Gasket surface finish

Code	Description	
1	Gasket surface Ra 125 Max./EN 1092-1 Type B2	

Cold temperature application

Code	Description	
B	Extra fill for cold temp application	★

Diaphragm coating

This option is only available on 316L SST, Alloy 400, and Alloy C-276.

Code	Description	
Z	0.0002-in. (5 µm) gold plated diaphragm	
V	PTFE coated diaphragm for nonstick purposes only	

Positive Material Identification (PMI)

Code	Description	
Q76	PMI Verification and Certificate	

FCW Flush Flanged Seal - RTJ gasket surface



Specification and selection of product materials, options, or components must be made by the purchaser of the equipment. See Material selection for more information.

The starred offerings (★) represent the most common options and should be selected for best delivery. The non-starred offerings are subject to additional delivery lead time.

Required model components

Industry standards

Code	Description	
A	ASME B16.5 (American Society of Mechanical Engineers)	
G	HG20615 (Chinese Standard based on ASME B16.5)	

Process connection style

Code	Description	
FCW	Flush flanged seal - Ring Type Joint (RTJ) gasket surface	

Process connection size

Code	ANSI	
G	2-in.	
7	3-in.	

Flange/pressure rating

Code	ANSI	
1	Class 150	
2	Class 300	
4	Class 600	
5	Class 900	
6	Class 1500	
7	Class 2500	

Diaphragm and wetted, upper housing, flange material

Code	Diaphragm and wetted	Upper housing	Flange	
DA(1)	316L SST	316 L SST	316 SST	
KB(1)	Alloy C-276	316 L SST	316 SST	
K6(1)	Duplex 2205 SST	316 L SST	316 SST	
MB(1)	Alloy C-276	316 L SST	CS	
CA(1)	316 L SST	316 L SST	CS	
M6	Duplex 2205 SST	316 L SST	CS	
K5(1)	Duplex 2507 SST	316L SST	316 SST	
M5(1)	Duplex 2507 SST	316L SST	CS	

(1) *Not available with one-piece design (option code E).*

Flushing connection ring material (lower housing)

Lower housings are shipped loose and are not included in option P1 for hydrostatic pressure testing.

Code	Description	
0	None	
A	316L SST	
B	Alloy C-276	
2	Duplex 2205 SST	

Flushing connections (connection size)

Code	Description	
0	None	
1	One connection (¼–18 NPT)	
3	Two connections (¼–18 NPT)	
7	One connection (½–14 NPT)	

Code	Description	
9	Two connections (½–14 NPT)	
Y	Assemble to Rosemount 319 Flushing Ring	★

Additional options

Extended product warranty

Code	Description	
WR3	3-year limited warranty	
WR5	5-year limited warranty	

Flushing plug, vent/drain valve

Code	Description	
D	Alloy C-276 plug(s) for flushing connection(s)	
G	316 SST plug(s) for flushing connection(s)	
H	316 SST vent/drain for flushing connection(s)	

Low side drain/vent valve

Required when using connection type option code A assembled to a transmitter with a differential pressure measurement type.

Code	Description	
FV	Low side drain/vent valve	

Diaphragm thickness

Code	Description	
C	0.006-in. (150 µm) available with 316L SST, Alloy C-276, and Duplex 2205 SST for abrasive applications	
7	0.002-in. (50 µm) available with 316L SST and Alloy C-276	

NACE® certificate

Materials of Construction comply with metallurgical requirements highlighted within NACE MR 0175/ISO 15156 for sour oil field production environments. Environmental limits apply to certain materials. Consult latest standard for details. Selected materials also conform to NACE MR 0103 for sour refining environments.

Code	Description	
Q15	Certificate of compliance to NACE MR0175/ISO 15156 for wetted materials	★
Q25	Certificate of compliance to NACE MR0103 for wetted materials	★

Cold temperature application

Code	Description	
B	Extra fill for cold temp application	

Diaphragm coating

This option is only available on 316L SST and Alloy C-276.

Code	Description	
Z	0.0002-in. (5 µm) gold plated diaphragm	
V	PTFE coated diaphragm for nonstick purposes only	

Capillary weld corrosion protection

Code	Description	
FB	Environmental corrosion protection for capillary welds	

Alternate design

Code	Description	
E	One-piece design	

Positive Material Identification (PMI)

Code	Description	
Q76	PMI Verification and Certificate	

RCW Remote Flange Seal



Specification and selection of product materials, options, or components must be made by the purchaser of the equipment. See Material selection for more information.

The starred offerings (★) represent the most common options and should be selected for best delivery. The non-starred offerings are subject to additional delivery lead time.

Required model components

Industry standards

Code	Description	
A	ASME B16.5 (American Society of Mechanical Engineers)	
G	HG20615 (Chinese Standard based on ASME B16.5)	

Process connection style

Code	Description	
RCW	Remote flanged seal - Ring Type Joint (RTJ) surface	

Process connection size

Code	ANSI	
1	½-in. (bolts and studs included for ANSI Class 300 to 1500, not available for ANSI Class 150)	
A	¾-in. (not available for Class 150)	
2	1-in.	
4	1½-in.	

Flange/pressure rating

Code	ANSI	
1	Class 150	
2	Class 300	
4	Class 600	
5	Class 900	
6	Class 1500	
7	Class 2500	

Diaphragm and wetted, upper housing, flange material

Code	Diaphragm (wetted)	Upper housing (non-wetted)	
LA	316L SST	316 L SST	
LB	Alloy C-276	316 L SST	
LC	Tantalum	316 L SST	
LE	Alloy 600	316 L SST	
LF	304L SST	316 L SST	
LJ	Alloy B 316L SST	316 L SST	
LV	Alloy 400	316 L SST	
LP	Nickel 201	316 L SST	
BH	Titanium Gr. 4	Titanium Gr. 4	
LH(1)	Titanium Gr. 4	316L SST	
L4	Alloy 22	316L SST	
L6	Duplex 2205 SST	316L SST	
LZ(1)	Zirconium 702	316L SST	
LK	Alloy 20	316L SST	
L5	Duplex 2507 SST	316L SST	

(1) *Operating temperature is limited to 302 °F (150 °C).*

Flushing connection ring material (lower housing)

If no intermediate gasket material is selected, a Klingersil C-4401 aramid fiber gasket will be supplied.

Lower housings are shipped loose and are not included in option P1 for hydrostatic pressure testing.

Code	Description	
A	316L SST	

Code	Description	
B	Alloy C-276	
F	304L SST	
H	Titanium Gr. 4	
2	Duplex 2205 SST	
V	Alloy 400	

Flushing connections (connection size)

Code	Description	
5	None	
1	One connection (¼–18 NPT)	
3	Two connections (¼–18 NPT)	
7	One connection (½–14 NPT)	
9	Two connections (½–14 NPT)	
Y	Assemble to Rosemount 319 Flushing Ring	★

Additional options

Extended product warranty

Code	Description	
WR3	3-year limited warranty	
WR5	5-year limited warranty	

Intermediate gasket material

Code	Description	
Y	Klingersil C-4401 gasket	★
J	PTFE gasket	
N	GRAFOIL® gasket	
K	Barium sulfate filled PTFE gasket	
R	Ethylene propylene gasket	

Flushing plug, vent/drain valve

Code	Description	
D	Alloy C-276 plug(s) for flushing connection(s)	
G	316 SST plug(s) for flushing connection(s)	
H	316 SST vent/drain for flushing connection(s)	

Low side drain/vent valve

Required when using connection type option code A assembled to a transmitter with a differential pressure measurement type.

Code	Description	
FV	Low side drain/vent valve	

Diaphragm thickness

Code	Description	
C	0.006-in. (150 µm) available with 316L SST, Alloy C-276, and Duplex 2205 SST for abrasive applications	

Bolt material

Note
Default is Tin plated CS.

Code	Description	
3	304 SST bolts (only available for stud bolt design)	
FA	316 SST bolts (only available for stud bolt design)	

NACE® certificate

Materials of Construction comply with metallurgical requirements highlighted within NACE MR 0175/ISO 15156 for sour oil field production environments. Environmental limits apply to certain materials. Consult latest standard for details. Selected materials also conform to NACE MR 0103 for sour refining environments.

Code	Description	
Q15	Certificate of compliance to NACE MR0175/ISO 15156 for wetted materials	★
Q25	Certificate of compliance to NACE MR0103 for wetted materials	★

Cold temperature application

Code	Description	
B	Extra fill for cold temp application	

Diaphragm coating

This option is only available on 316L SST, Alloy 400, and Alloy C-276.

Code	Description	
Z	0.0002-in. (5 µm) gold plated diaphragm	
V	PTFE coated diaphragm for nonstick purposes only	

SensorShield™ diaphragm coating

This option is not compatible with spiral wound gaskets.

Code	Description	
FP	CorrosionShield™ PFA coated diaphragm	

Large diaphragm size

Code	Description	
9	4.1-in. (104 mm) diaphragm diameter	

Capillary weld corrosion protection

Code	Description	
FB	Environmental corrosion protection for capillary welds	

Positive Material Identification (PMI)

Code	Description	
Q76	PMI Verification and Certificate	

FUV and FVW Flush Flanged Type



Specification and selection of product materials, options, or components must be made by the purchaser of the equipment. See Material selection for more information.

The starred offerings (★) represent the most common options and should be selected for best delivery. The non-starred offerings are subject to additional delivery lead time.

Required model components

Industry standards

Code	Description	
D	EN 1092-1 (European Standard)	
T	GOST 33259-15 (Russian Standard)	
K	HG20592 (Chinese Standard based on EN 1092-1)	

Process connection style

Code	Description	
FUW	Flush flanged, EN 1092-1 type D (groove)	
FVW	Flush flanged, EN 1092-1 type C (tongue)	

Process connection size

Code	Size	
D	DN 25	
G	DN 50	
J	DN 80	

Flange/pressure rating

Code	Size	
G	PN 40	

Diaphragm and wetted, upper housing, flange material

Code	Diaphragm (wetted)	Upper housing (non-wetted)	Flange	
DA[1]	316L SST	316L SST	316 SST	
KB[2]	Alloy C-276	316L SST	316 SST	
DC[1]	Tantalum	316L SST	316 SST	

(1) *Only available with one-piece design, option code E.*
(2) *Only available with two-piece design.*

Flushing connection ring material (lower housing)

Code	Description	
0	None	

Flushing connections (quantity, size)

Code	Description	
0	None	

Additional options

Extended product warranty

Code	Description	
WR3	3-year limited warranty	
WR5	5-year limited warranty	

Low side drain/vent valve

Required when using connection type option code A assembled to a transmitter with a differential pressure measurement type.

Code	Description	
FV	Low side drain/vent valve	

Cold temperature application

Code	Description	
B	Extra fill for cold temp application	

Alternate design

Code	Description	
E	One-piece design	

NACE® certificate

Materials of Construction comply with metallurgical requirements highlighted within NACE MR 0175/ISO 15156 for sour oil field production environments. Environmental limits apply to certain materials. Consult latest standard for details. Selected materials also conform to NACE MR 0103 for sour refining environments.

Code	Description	
Q15	Certificate of compliance to NACE MR0175/ISO 15156 for wetted materials	★
Q25	Certificate of compliance to NACE MR0103 for wetted materials	★

Positive Material Identification (PMI)

Code	Description	
Q76	PMI Verification and Certificate	

Threaded seals

Optimizing lead time

The starred offerings (★) represent the most common options and should be selected for the fastest delivery times. The non-starred offerings are subject to additional delivery lead time.

RTW Remote Threaded Seal



Specification and selection of product materials, options, or components must be made by the purchaser of the equipment.

The starred offerings (★) represent the most common options and should be selected for best delivery. The non-starred offerings are subject to additional delivery lead time.

Required model components

Industry standards

Code	Description	
A	ASME B1.20.1	★
D	EN 10226-1/ISO 228-1	★

Process connection style

Code	Description	
RTW	Threaded (standard thread is female, for male select Option code 9)	★

Process connection size

Code	ASME B1.20.1	EN 10226-1	ISO 228-1	
1	¼–18 NPT	N/A	N/A	
2	⅜–18 NPT	N/A	N/A	
3	½–14 NPT	N/A	N/A	★
4	¾–14 NPT	N/A	N/A	★
5	1–11½ NPT	N/A	N/A	★
6[(1)]	1¼–11½ NPT	N/A	N/A	
7[(1)]	1½–11½ NPT	N/A	N/A	★
C	N/A	N/A	G½ (EN 837-1)	
N	N/A	Tapered thread: R½ per ISO 7/1	N/A	

(1) *Flushing connection not available.*

Pressure rating

Code	ASME B1.20.1	EN 10226-1	ISO 228-1	
0	2500 psi	172 bar	172 bar	★
2[1]	5000 psi	344 bar	344 bar	
3[1][2][3]	10000 psi	690 bar	690 bar	
8	1500 psi (4.1-in. [104 mm]) diaphragm	103 bar (4.1-in. [104 mm]) diaphragm	103 bar (4.1-in. [104 mm]) diaphragm	

(1) *Consult an Emerson representative for pricing and availability on Pressure Rating codes 2 or 3.*
(2) *The following process connection sizes are derated: ¾-in. (9000 psi/621 bar), 1-in. (8700 psi/600 bar), 1¼-in. (7000 psi/483 bar), and 1½-in. (6000 psi/414 bar).*
(3) *Not available for direct mount on coplanar systems.*

Diaphragm, upper housing, flange material

Code	Diaphragm (wetted)	Upper housing (non-wetted)	
DA	316L SST	316L SST	★
DB	Alloy C-276	316L SST	★
DC	Tantalum	316L SST	★
DJ	Alloy B	316L SST	
DF	304L SST	316L SST	
DP	Nickel 201	316L SST	
DV	Alloy 400	316L SST	
RH[1]	Titanium Gr. 4	Titanium Gr.4	
DH[2]	Titanium Gr. 4	316L SST	
D4	Alloy 22	316L SST	
D6	Duplex 2205 SST	316L SST	
DE	Alloy 600	316L SST	
DZ	Zirconium 702	316L SST	
DK	Alloy 20	316L SST	
RZ	Zirconium 702	Zirconium 702	
D5	Duplex 2507 SST	316L SST	

(1) *Not available with welded capillary connections or direct mount.*
(2) *Operating temperature limited to 302 °F (150 °C).*

Flushing connection ring material (lower housing)

If no intermediate gasket material is selected, a Klingersil C-4401 aramid fiber gasket will be supplied.

Default lower housing assembly bolts are carbon steel for ASME and 304 SST for EN.

Lower housings are shipped loose and are not included in option P1 for hydrostatic pressure testing.

Code	Description	
A	316L SST	★
B	Alloy C-276	★
D	Plated carbon steel	
2	Duplex 2205 SST	
H	Titanium Gr. 4	

Code	Description	
V	Alloy 400	
F	304L SST	

Flushing connections (connection size)

Code	Description	
5	None	★
1	One connection (¼–18 NPT)	★
3	Two connections (¼–18 NPT)	★
7	One connection (½–14 NPT)	
9	Two connections (½–14 NPT)	
Y	Assemble to Rosemount 319 Flushing Ring	★

Additional options

Extended product warranty

Code	Description	
WR3	3-year limited warranty	★
WR5	5-year limited warranty	★

Intermediate gasket material

Code	Description	
Y	Klingersil C-4401 gasket	★
J	PTFE gasket	★
N	GRAFOIL® gasket	★
R	Ethylene propylene gasket	★
K	Barium sulfate filled PTFE gasket	

Flushing plug, vent/drain valve

Code	Description	
D	Alloy C-276 plug(s) for flushing connection(s)	★
G	316 SST plug(s) for flushing connection(s)	
H	316 SST vent/drain for flushing connection(s)	

Low side drain/vent valve

Required when using connection type option code A assembled to a transmitter with a differential pressure measurement type.

Code	Description	
FV	Low side drain/vent valve	

Diaphragm thickness

Code	Description	
C	0.006-in. (150 µm) available with 316L SST, Alloy C-276, and Duplex 2205 SST for abrasive applications	

Bolt material

Note
Default is Tin plated CS.

Code	Description	
3	304 SST bolts	★
4	316 SST bolts	

NACE® certificate

Materials of Construction comply with metallurgical requirements highlighted within NACE MR 0175/ISO 15156 for sour oil field production environments. Environmental limits apply to certain materials. Consult latest standard for details. Selected materials also conform to NACE MR 0103 for sour refining environments.

Code	Description	
Q15	Certificate of compliance to NACE MR0175/ISO 15156 for wetted materials	★
Q25	Certificate of compliance to NACE MR0103 for wetted materials	★

Cold temperature application

Code	Description	
B	Extra fill for cold temp application	★

Diaphragm coating

This option is only available on 316L SST, Alloy 400, and Alloy C-276.

Code	Description	
Z	0.0002-in. (5 µm) gold plated diaphragm	
V	PTFE coated diaphragm for nonstick purposes only	

SensorShield™ diaphragm coating

This option is not compatible with spiral wound gaskets.

Code	Description	
FP	CorrosionShield™ PFA coated diaphragm	

Special threads in lower housing

Code	Description	
9	Male threads	

Capillary weld corrosion protection

Code	Description	
FB	Environmental corrosion protection for capillary welds	

Positive Material Identification (PMI)

Code	Description	
Q76	PMI Verification and Certificate	

HTS Male Threaded Seal



Specification and selection of product materials, options, or components must be made by the purchaser of the equipment. See Material selection for more information.

The starred offerings (★) represent the most common options and should be selected for best delivery. The non-starred offerings are subject to additional delivery lead time.

Required model components

Industry standards

Code	Description	
A	ASME B1.20.1 (American Society of Mechanical Engineers)	
D	ISO 228-1	

Process connection style

Code	Description	
HTS	Threaded - male threaded seal	

Process connection size

Code	ASME B1.20.1	ISO 228-1	
5A[1]	1–11½ NPT, 8700 psi (600 bar)	N/A	
7A[2]	1½–11½ NPT, 6000 psi (414 bar)	N/A	
9A[3]	2–11½ NPT, 4000 psi (276 bar)	N/A	
EA[1]	N/A	G1 (ISO 1179-3)	
GA[2]	N/A	G1½ (ISO 1179-3)	
JA[3]	N/A	G2 (ISO 1179-3)	

(1) *Consult factory for calibrated spans lower than 300 psi (21 bar).*
(2) *Consult factory for calibrated spans lower than 100 psi (7 bar).*
(3) *Consult factory for calibrated spans lower than 50 psi (3.4 bar).*

Diaphragm and wetted, upper housing material

Code	Diaphragm (wetted)	Upper housing (non-wetted)	
LA00	316L SST	316L SST	

Additional options

Extended product warranty

Code	Description	
WR3	3-year limited warranty	★
WR5	5-year limited warranty	★

Low side drain/vent valve

Required when using connection type option code A assembled to a transmitter with a differential pressure measurement type.

Code	Description	
FV	Low side drain/vent valve	

Positive Material Identification (PMI)

Code	Description	
Q76	PMI Verification and Certificate	

Hygienic seals

Optimizing lead time

The starred offerings (★) represent the most common options and should be selected for the fastest delivery times. The non-starred offerings are subject to additional delivery lead time.

SCW Hygienic Tri-Clover Style Tri-Clamp



The purchaser of the equipment must make the specification and selection of product materials, options, or components.

The starred offerings (★) represent the most common options and should be selected for best delivery. The non-starred offerings are subject to additional delivery lead time.

Required model components

Industry standards

Code	Description	
S	Hygienic seal (conforms to 3-A® Standard 74-06 and EHEDG Type EL Class I)	★

Process connection style

For gaskets furnished by the user, ensure EGEDG-approved gaskets are used to ensure conformity. EHEDG conformity is not retained if clamp and gasket material codes 2 or 3 are selected.

All process wetted parts have surface finish of Ra < 32 µin (0.81 µm) standard unless otherwise specified.

Code	Description	
SCW	Tri-Clover style Tri-Clamp seal	★

Process connection size

Code	3-A Standard 74-06	
30(1)	1½-in.	★
50(2)	2-in.	★
70	3-in.	★
60	2½-in.	
90	4-in.	

(1) *Consult factory for calibrated spans lower than 1,000 inH_2O (2,490 mbar).*
(2) *Consult factory for calibrated spans lower than 150 inH_2O (373 mbar).*

Diaphragm and wetted, upper housing material

Code	Diaphragm (wetted)	Upper housing (non-wetted)	
LA00	316L SST		★
LB00	Alloy C-276	316L SST	

Additional options

Extended product warranty

Code	Description	
WR3	3-year limited warranty	
WR5	5-year limited warranty	

Surface finish

Code	Description	
D	10 µin. (0.25 µm) R_a surface finish	
G	15 µin. (0.375 µm) R_a surface finish	
H	20 µin. (0.50 µm) R_a surface finish	

Low side drain/vent valve

Required when using connection type option code A assembled to a transmitter with a differential pressure measurement type.

Code	Description	
FV	Low side drain/vent valve	

Non-hygienic fill fluid

Code	Description	
P	Non-hygienic fill fluid (does not conform to 3-A Standard 74)	

Clamp and gasket material

These options are not EHEDG approved.

Code	Description	
2(1)	High-pressure Ladish™ clamp and nitrile butadience (NBR) gasket	
3	Nitrile butadiene (NBR) gasket	

(1) *See Table 11.*

Table 11: High Pressure Ladish Clamp MWP

Process connection size	70 °F (21 °C)	250 °F (121 °C)
1½-in.	1,500 psi (103 bar)	1,200 psi (83 bar)
2-in.	1,000 psi (69 bar)	800 psi (55 bar)
2½-in.		
3-in.		
4-in.	600 psi (41 bar)	480 psi (33 bar)

Polishing

Code	Description	
6	Electropolishing	

Positive Material Identification (PMI)

Code	Description	
Q76	PMI Verification and Certificate	

SSW Hygienic Tank Spud



Specification and selection of product materials, options, or components must be made by the purchaser of the equipment.

The starred offerings (★) represent the most common options and should be selected for best delivery. The non-starred offerings are subject to additional delivery lead time.

Required model components

Industry standards

Code	Description	
S	Hygienic seal (conforms to 3-A® Standard 74-06)	★

Process connection style

Ethylene propylene O-ring (conforms to 3-A standard 74 and USP Class VI) and clamp are supplied with the SSW seal.

All process wetted parts have surface finish of Ra < 32 µin (0.81 µm) standard unless otherwise specified.

Code	Description	
SSW	Tank spud seal	★

Process connection size, pressure rating

Code	Description	
A0	150 psi (10.3 bar)	★

Upper housing

Code	Description	
A	316L SST	★

Diaphragm and wetted, extension material

Code	Diaphragm and wetted	Extension	
AL(1)	316L SST	316L SST	★
BB	Alloy C-276	316L SST	★

(1) *Diaphragm brazed and TIG-welded to extension.*

Extension length

Code	Description	
2	2-in.	★
6	6-in.	★

Additional options

Extended product warranty

Code	Description	
WR3	3-year limited warranty	
WR5	5-year limited warranty	

Surface finish

Code	Description	
G(1)	15 µin. (0.375 µm) R_a surface finish	
H	20 µin. (0.50 µm) R_a surface finish	

(1) *Requires Option code 6, Electropolishing.*

Low side drain/vent valve

Required when using connection type option code A assembled to a transmitter with a differential pressure measurement type.

Code	Description	
FV	Low side drain/vent valve	

Diaphragm thickness

Code	Description	
C	0.006-in. (150 µm) available with 316L SST and Alloy C-276 for abrasive applications	

Tank spud

Code	Description	
1	SST tank spud included with shipment	★

Non-hygienic fill fluid

Code	Description	
P	Non-hygienic fill fluid (does not conform to 3-A Standard 74)	

Special O-rings

Code	Description	
3	Nitrile Butadiene (NBR) O-ring, instead of standard ethylene propylene O-ring (conforms to 3-A Standard 74)	
4	Fluorocarbon (FKM) O-ring, instead of standard ethylene propylene O-ring (conforms to 3-A Standard 74)	

Polishing

Code	Description	
6	Electropolishing	

Positive Material Identification (PMI)

Code	Description	
Q76	PMI Verification and Certificate	

Sanitary tank spud accessories

Tank spud and clamp



Rosemount 3051S with direct mount sanitary tank spud with clamp



Spud dimensions

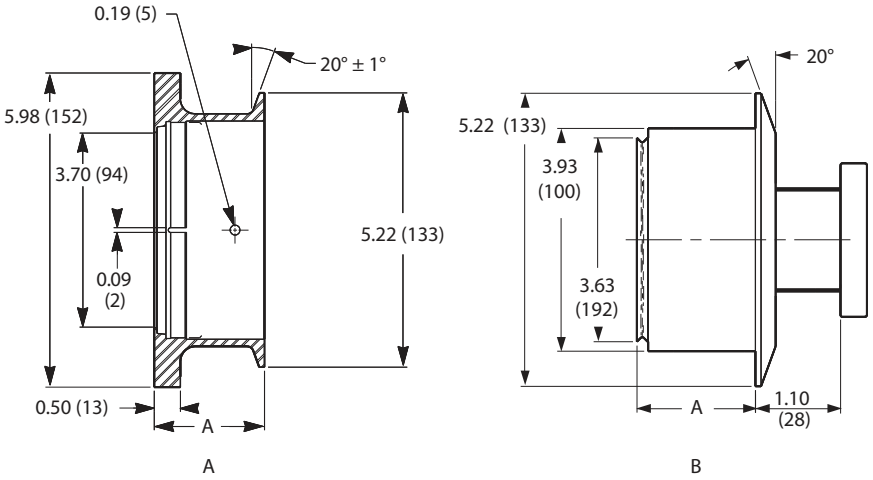

A. Tank spud
B. Tank spud plug

Dimensions are in inches (millimeters).

Table 12: Sanitary Tank Spud Optional Accessories

Welding procedures and material certifications are shipped with the tank spud. Standard material is cast equivalent of 316L SST per ASTM- A351 grade CF3M.

Model	Description
01199-0061-0001	2-in. SST sanitary tank spud
01199-0061-0002	6-in. SST sanitary tank spud

Table 13: Sanitary Tank Spud Spare Parts

Part number	Description
01199-0526-0002	Clamp
01199-7001-0003	Ethylene propylene O-ring

STW Hygienic Thin Wall Tank Spud Seal



Specification and selection of product materials, options, or components must be made by the purchaser of the equipment. See Material selection for more information.

The starred offerings (★) represent the most common options and should be selected for best delivery. The non-starred offerings are subject to additional delivery lead time.

Required model components

Industry standards

Code	Description	
S	Hygienic seal (conforms to 3-A® Standard 74-06)	

Process connection style

This option is for tank walls up to 3/16-in. thick. Ethylene propylene O-ring (conforms to 3-A standard 74 and USP Class VI) and clamp are supplied with the STW seal.

All process wetted parts have surface finish of Ra < 32 µin (0.81 µm) standard unless otherwise specified.

Code	Description	
STW	Thin wall tank spud seal	

Process connection size, pressure rating

Code	Description	
B0	4-in. Tri Clamp, 150 psi (10.3 bar)	

Diaphragm and wetted, extension material

Code	Diaphragm and wetted	Extension	
LA00	316L SST	316L SST	
BB00	Alloy C-276	Alloy C-276	

Additional options

Extended product warranty

Code	Description	
WR3	3-year limited warranty	
WR5	5-year limited warranty	

Surface finish

Code	Description	
G(1)	15 µin. (0.375 µm) R_a surface finish	
H	20 µin. (0.50 µm) R_a surface finish	

(1) *Requires Option code 6, Electropolishing.*

Low side drain/vent valve

Required when using connection type option code A assembled to a transmitter with a differential pressure measurement type.

Code	Description	
FV	Low side drain/vent valve	

Non-hygienic fill fluid

Code	Description	
P	Non-hygienic fill fluid (does not conform to 3-A Standard 74)	

Polishing

Code	Description	
6	Electropolishing	

Positive Material Identification (PMI)

Code	Description	
Q76	PMI Verification and Certificate	

EES Hygienic Flanged Tank Spud Extended Seal



Specification and selection of product materials, options, or components must be made by the purchaser of the equipment. See Material selection for more information.

The starred offerings (★) represent the most common options and should be selected for best delivery. The non-starred offerings are subject to additional delivery lead time.

Required model components

Industry standards

Code	Description	
S	Hygienic seal (conforms to 3-A® Standard 74-06)	

Process connection style

All process wetted parts have surface finish of Ra < 32 µin (0.81 µm) standard unless otherwise specified.

Code	Description	
EES	Flanged tank spud seal	

Process connection size, pressure rating

Code	Description	
GG	DN 50, PN 40	
JG	DN 80, PN 40	

Diaphragm and wetted, extension material

Code	Diaphragm and wetted	Extension	
LA	316L SST	316L SST	
LB	Alloy C-276	316L SST	

Extension length

Other extension lengths are available upon request.

Code	Description	
10	1-in. (25 mm)	

Additional options

Extended product warranty

Code	Description	
WR3	3-year limited warranty	
WR5	5-year limited warranty	

Surface finish

Code	Description	
G[1]	15 µin. (0.375 µm) R_a surface finish	
H	20 µin. (0.50 µm) R_a surface finish	

(1) *Requires Option code 6, Electropolishing.*

Low side drain/vent valve

Required when using connection type option code A assembled to a transmitter with a differential pressure measurement type.

Code	Description	
FV	Low side drain/vent valve	

Gasket material

Code	Description	
1	Fluorocarbon (FMK) O-ring, instead of Standard ethylene propylene O-ring (conforms to 3-A Standard 74).	

Non-hygienic fill fluid

Code	Description	
P	Non-hygienic fill fluid (does not conform to 3-A Standard 74)	

Cold water application

Code	Description	
B	Extra fill for cold temperature application	

Polishing

Code	Description	
6	Electropolishing	

Positive Material Identification (PMI)

Code	Description	
Q76	PMI Verification and Certificate	

VCS Tri-Clamp In-Line Seal



Specification and selection of product materials, options, or components must be made by the purchaser of the equipment. See Material selection for more information.

The starred offerings (★) represent the most common options and should be selected for best delivery. The non-starred offerings are subject to additional delivery lead time.

Required model components

Industry standards

Code	Description	
S	Hygienic seal (conforms to 3-A® Standard 74-06 and EHEDG Type EL Class I)	

Process connection style

The user must furnish the clamp and gasket. Ensure to use EHEDG approved gasket if EHEDG conformity is needed. The MWP is dependent upon the clamp pressure rating.

All process wetted parts have surface finish of Ra < 32 µin (0.81 µm) standard unless otherwise specified.

Code	Description	
VCS	In-line Tri-Clover style Tri-Clamp seal	

Process connection size

Code	3-A Standard 74-06	
20(1)	1-in.	
30(2)	1½-in.	
50	2-in.	
70	3-in.	
90	4-in.	

(1) *Consult factory for calibrated spans lower than 15 psi (1,034 mbar).*
(2) *Consult factory for calibrated spans lower than 5 psi (345 mbar).*

Diaphragm and wetted, upper housing material

Code	Diaphragm (wetted)	Upper housing (non-wetted)	
LA00	316L SST	316L SST	

Additional options

Extended product warranty

Code	Description	
WR3	3-year limited warranty	
WR5	5-year limited warranty	

Surface finish

Code	Description	
G[1]	15 µin. (0.375 µm) R_a surface finish	
H	20 µin. (0.50 µm) R_a surface finish	

(1) *Requires Option code 6, Electropolishing.*

Low side drain/vent valve

Required when using connection type option code A assembled to a transmitter with a differential pressure measurement type.

Code	Description	
FV	Low side drain/vent valve	

Non-hygienic fill fluid

Code	Description	
P	Non-hygienic fill fluid (does not conform to 3-A Standard 74)	

Polishing

Code	Description	
6	Electropolishing	

Positive Material Identification (PMI)

Code	Description	
Q76	PMI Verification and Certificate	

SVS VARIVENT® Compatible Hygienic Connection Seal



Specification and selection of product materials, options, or components must be made by the purchaser of the equipment. See Material selection for more information.

The starred offerings (★) represent the most common options and should be selected for best delivery. The non-starred offerings are subject to additional delivery lead time.

Required model components

Industry standards

Code	Description	
S	Hygienic seal (conforms to 3-A® Standard 74-06 and EHEDG Type EL Class I)	

Process connection style

User must furnish gasket. Ensure to use EHEDG approved gasket if EHEDG conformity is needed. The MWP is dependent upon the clamp pressure rating.

All process wetted parts have surface finish of Ra < 32 µin (0.81 µm) standard unless otherwise specified.

Code	Description	
SVS	Tuchenhagen VARIVENT compatible seal	

Process connection size

Consult factory for calibrated spans lower than 5.4 psi (373 mbar).

Code	Description	
V0	VARIVENT type N DN 40-125	

Diaphragm and wetted, upper housing material

Code	Diaphragm (wetted)	Upper housing (non-wetted)	
LA00	316L SST	316L SST	

Additional options

Extended product warranty

Code	Description	
WR3	3-year limited warranty	
WR5	5-year limited warranty	

Low side drain/vent valve

Required when using connection type option code A assembled to a transmitter with a differential pressure measurement type.

Code	Description	
FV	Low side drain/vent valve	

Non-hygienic fill fluid

Code	Description	
P	Non-hygienic fill fluid (does not conform to 3-A Standard 74)	

Cold water application

Code	Description	
B	Extra fill for cold temperature application	

Polishing

Code	Description	
6	Electropolishing	

Positive Material Identification (PMI)

Code	Description	
Q76	PMI Verification and Certificate	

SHP Hygienic Cherry-Burrell® “I” Line Seal



Specification and selection of product materials, options, or components must be made by the purchaser of the equipment. See Material selection for more information.

The starred offerings (★) represent the most common options and should be selected for best delivery. The non-starred offerings are subject to additional delivery lead time.

Required model components

Industry standards

Code	Description	
S	Hygienic seal (conforms to 3-A® Standard 74-06)	

Process connection style

User must furnish clamp and gasket. MWP is the lesser of either clamp pressure rating or 500 psi.

All process wetted parts have surface finish of Ra < 32 µin (0.81 µm) standard unless otherwise specified.

Code	Description	
SHP	Cherry-Burrell “I” line style seal	

Process connection size

Consult factory for calibrated spans lower than 5.4 psi (373 mbar).

Code	Description	
50(1)	2-in.	
70	3-in.	

(1) *Consult factory for calibrated spans lower than 5 psi (345 mbar).*

Diaphragm and wetted, upper housing material

Code	Diaphragm (wetted)	Upper housing (non-wetted)	
AA00	316L SST	316L SST	

Additional options

Extended product warranty

Code	Description	
WR3	3-year limited warranty	
WR5	5-year limited warranty	

Low side drain/vent valve

Required when using connection type option code A assembled to a transmitter with a differential pressure measurement type.

Code	Description	
FV	Low side drain/vent valve	

Non-hygienic fill fluid

Code	Description	
P	Non-hygienic fill fluid (does not conform to 3-A Standard 74)	

Positive Material Identification (PMI)

Code	Description	
Q76	PMI Verification and Certificate	

SLS Dairy Process Connection - female thread seal per DIN 11851



Specification and selection of product materials, options, or components must be made by the purchaser of the equipment. See Material selection for more information.

The starred offerings (★) represent the most common options and should be selected for best delivery. The non-starred offerings are subject to additional delivery lead time.

Required model components

Industry standards

Code	Description	
S	Hygienic seal (conforms to 3-A® Standard 74-06 and EHEDG Type EL Class I)	

Process connection style

User must furnish gasket. Ensure to use EHEDG approved gasket if EHEDG conformity is needed.

All process wetted parts have surface finish of Ra < 32 µin (0.81 µm) standard unless otherwise specified.

Code	Description	
SLS	Hygienic female threaded seal per DIN 11851	

Process connection size, pressure rating, material

Consult factory for calibrated spans lower than 5.4 psi (373 mbar).

Code	Description	
F0(1)	DIN 11851 with coupling nut DN 40, PN 40, 304 SST	
G0(2)	DIN 11851 with coupling nut DN 50, PN 25, 304 SST	

(1) *Consult factory for calibrated spans lower than 15 psi (1,034 mbar).*
(2) *Consult factory for calibrated spans lower than 5 psi (345 mbar).*

Diaphragm and wetted, upper housing material

Code	Diaphragm (wetted)	Upper housing (non-wetted)	
LA00	316L SST	316L SST	

Additional options

Extended product warranty

Code	Description	
WR3	3-year limited warranty	
WR5	5-year limited warranty	

Low side drain/vent valve

Required when using connection type option code A assembled to a transmitter with a differential pressure measurement type.

Code	Description	
FV	Low side drain/vent valve	

Polishing

Code	Description	
6	Electropolishing	

Non-hygienic fill fluid

Code	Description	
P	Non-hygienic fill fluid (does not conform to 3-A Standard 74)	

Positive Material Identification (PMI)

Code	Description	
Q76	PMI Verification and Certificate	

Specialty seals

Optimizing lead time

The starred offerings (★) represent the most common options and should be selected for the fastest delivery times. The non-starred offerings are subject to additional delivery lead time.

WSP Saddle Seal



The purchaser of the equipment must make specification and selection of product materials, options, or components. See Material selection for more information.

The starred offerings (★) represent the most common options and should be selected for best delivery. The non-starred offerings are subject to additional delivery lead time.

Required model components

Industry standards

Code	Description	
N	Non-industry standard	

Process connection style

Code	Description	
WSP	Saddle seal	

Process connection size

Code	Description	
G	2-in. pipe size	
7	3-in. pipe size	
9	4-in. or larger pipe size	

Pressure rating

Code	Description	
1	1500 psig at 100 °F (103 bar at 38 °C); eight bolt holes	
0	1250 psig at 100 °F (86 bar at 38 °C); six bolt holes	

Diaphragm, upper housing material

Code	Diaphragm (wetted)	Upper housing (non-wetted)	
LA	316L SST	316L SST	
LB	Alloy C-276	316L SST	
LC	Tantalum	316L SST	

Code	Diaphragm (wetted)	Upper housing (non-wetted)	
L6	Duplex 2205 SST	316 SST	
L5	Duplex 2507 SST	316L SST	

Lower housing material

Standard pipe schedule 40/40S, for other pipe schedules consult the factory.

If no intermediate gasket material is selected, then a Klingersil C-4401 aramid fiber gasket will be supplied.

Code	Description	
00	None	
L5	316L SST	
B5	Alloy C-276	
D5	Plated carbon steel	

Additional options

Extended product warranty

Code	Description	
WR3	3-year limited warranty	
WR5	5-year limited warranty	

Intermediate gasket material

Code	Description	
Y	Klingersil C-4401 gasket	
J	PTFE gasket	
N	GRAFOIL® gasket	

Low side drain/vent valve

Required when using connection type option code A assembled to a transmitter with a differential pressure measurement type.

Code	Description	
FV	Low side drain/vent valve	

NACE® certificate

Materials of Construction comply with metallurgical requirements highlighted within NACE MR 0175/ISO 15156 for sour oil field production environments. Environmental limits apply to certain materials. Consult latest standard for details. Selected materials also conform to NACE MR0103 for sour refining environments.

Code	Description	
Q15	Certificate of compliance to NACE MR0175/ISO 15156 for wetted materials	★
Q25	Certificate of compliance to NACE MR0103 for wetted materials	★

Diaphragm coating

Code	Description	
V	PTFE coated diaphragm for nonstick purposes (316L SST and Alloy C-276 diaphragms only)	

Positive Material Identification (PMI)

Code	Description	
Q76	PMI Verification and Certificate	

UCP and PMW Threaded Pipe Mount Seal



The purchaser of the equipment must make specification and selection of product materials, options, or components. See Material selection for more information.

The starred offerings (★) represent the most common options and should be selected for best delivery. The non-starred offerings are subject to additional delivery lead time.

Required model components

Industry standards

Code	Description	
N	Non-industry standard	

Process connection style

Code	Description	
UCP	Male threaded pipe mount seal	
PMW	Paper mill sleeve	

Process connection size, pressure rating

Code	Description	
30(1)	1½-in., threaded knurled nut, 600 psi at 100 °F (41 bar at 38 °C) (UCP only)	
50(2)	1-in., cap screw retainer, 300 psi at 100 °F (21 bar at 38 °C) (PMW only)	

(1) *Only available with UCP process connection size. Consult factory for calibrated spans lower than 50 psi (3.4 bar).*
(2) *Only available with PMW process connection size. Consult factory for calibrated spans lower than 100 psi (6.9 bar).*

Diaphragm and wetted, upper housing material

Code	Diaphragm (wetted)	Upper housing (non-wetted)	
AA	316L SST	316L SST	
BB	Alloy C-276	Alloy C-276	

Lower housing material

Code	Description	
00	None	
A0	316L SST	
B0	Alloy C-276	

Additional options

Extended product warranty

Code	Description	
WR3	3-year limited warranty	
WR5	5-year limited warranty	

Low side drain/vent valve

Required when using connection type option code A assembled to a transmitter with a differential pressure measurement type.

Code	Description	
FV	Low side drain/vent valve	

Diaphragm coating

Code	Description	
V	PTFE coated diaphragm for nonstick purposes only	

Positive Material Identification (PMI)

Code	Description	
Q76	PMI Verification and Certificate	

CTW Chemical Tee Seal



Specification and selection of product materials, options, or components must be made by the purchaser of the equipment. See Material selection for more information.

The starred offerings (★) represent the most common options and should be selected for best delivery. The non-starred offerings are subject to additional delivery lead time.

Required model components

Industry standards

Code	Description	
N	Non-industry standard	

Process connection style

Code	Description	
CTW	Chemical tee seal	

MWP (flange rating)

Code	Description	
20	300 psi (21 bar)	

Diaphragm and wetted, upper housing material

Code	Diaphragm (wetted)	Upper housing (non-wetted)	
AA	316L SST	316L SST	
BB	Alloy C-276	Alloy C-276	

Lower housing

Code	Description	
00	None	

Additional options

Extended product warranty

Code	Description	
WR3	3-year limited warranty	
WR5	5-year limited warranty	

Low side drain/vent valve

Required when using connection type option code A assembled to a transmitter with a differential pressure measurement type.

Code	Description	
FV	Low side drain/vent valve	

NACE® certificate

Materials of Construction comply with metallurgical requirements highlighted within NACE MR 0175/ISO 15156 for sour oil field production environments. Environmental limits apply to certain materials. Consult latest standard for details. Selected materials also conform to NACE MR0103 for sour refining environments.

Code	Description	
Q15	Certificate of compliance to NACE MR0175/ISO 15156 for wetted materials	★
Q25	Certificate of compliance to NACE MR0103 for wetted materials	★

Diaphragm coating

Code	Description	
V	PTFE coated diaphragm for nonstick purposes only	

Positive Material Identification (PMI)

Code	Description	
Q76	PMI Verification and Certificate	

TFS Wafer Style In-Line Seal



Specification and selection of product materials, options, or components must be made by the purchaser of the equipment. See Material selection for more information.

The starred offerings (★) represent the most common options and should be selected for best delivery. The non-starred offerings are subject to additional delivery lead time.

Required model components

Industry standards

Code	Description	
A	ASME B16.5 (American Society of Mechanical Engineers)	
D	EN 1092-1 (European standard)	

Process connection style

Code	Description	
TFS	Wafer style in-line seal	

Process connection size

Code	ASME B16.5	EN 1092-1	
G	2-in.	DN 50	
7	3-in.	N/A	
J	N/A	DN 80	
9	4-in.	N/A	
2[1]	1-in.	N/A	
4[2]	1½-in.	N/A	
D[1]	N/A	DN 25	
F[2]	N/A	DN 40	
K	N/A	DN 100	

(1) *Consult factory for calibrated spans lower than 15 psi (1,034 mbar).*
(2) *Consult factory for calibrated spans lower than 5 psi (345 mbar).*

Pressure rating

Code	Description	
0	Seal MWP based on customer supplied flange	

Diaphragm and wetted, upper housing material

Code	Diaphragm (wetted)	Upper housing (non-wetted)	
LA	316L SST	316L SST	

Housing body length

Code	Description	
00	3.54-in. (90 mm)	

Additional options

Extended product warranty

Code	Description	
WR3	3-year limited warranty	
WR5	5-year limited warranty	

Low side drain/vent valve

Required when using connection type option code A assembled to a transmitter with a differential pressure measurement type.

Code	Description	
FV	Low side drain/vent valve	

Positive Material Identification (PMI)

Code	Description	
Q76	PMI Verification and Certificate	

WFW Flow-Through Flanged Seal



Specification and selection of product materials, options, or components must be made by the purchaser of the equipment. See Material selection for more information.

The starred offerings (★) represent the most common options and should be selected for best delivery. The non-starred offerings are subject to additional delivery lead time.

Required model components

Industry standards

Code	Description	
A	ASME B16.5 (American Society of Mechanical Engineers)	

Process connection style

A C-4401 Aramid fiber intermediate gasket supplied if no other intermediate gasket option is selected.

Code	Description	
WFW	Flow-through flanged seal	

Process connection size

Consult factory for special process connection sizes, flange pressure ratings, diaphragm/lower housing materials, and pipe schedules.

Code	ASME B16.5	
G	2-in.	
7	3-in.	
2	1-in.	

Flange rating

Consult factory for special process connection sizes, flange pressure ratings, diaphragm/lower housing materials, and pipe schedules.

Code	Description	
1	Class 150	

Diaphragm, upper housing material

Consult factory for special process connection sizes, flange pressure ratings, diaphragm/lower housing materials, and pipe schedules.

Code	Diaphragm (wetted)	Upper housing (non-wetted)	
LA	316L SST	316L SST	
LC	Tantalum	316L SST	

Lower housing material

If no intermediate gasket material is selected, a Klingersil C-4401 aramid fiber gasket will be supplied.

Code	Description	
L	316L SST	

Pipe schedule

Consult factory for special process connection sizes, flange pressure ratings, diaphragm/lower housing materials, and pipe schedules.

Code	Description	
N	40/40S	

Additional options

Extended product warranty

Code	Description	
WR3	3-year limited warranty	
WR5	5-year limited warranty	

Gasket material

Code	Description	
Y	Klingersil C-4401 gasket	
J	PTFE O-ring	
K	Barium sulfate filled PTFE gasket	
N	GRAFOIL® gasket	
R	Ethylene propylene gasket	

Low side drain/vent valve

Required when using connection type option code A assembled to a transmitter with a differential pressure measurement type.

Code	Description	
FV	Low side drain/vent valve	

Bolt material

Note
Default is Tin plated CS.

Code	Description	
3	304 SST bolts	

NACE® certificate

Materials of Construction comply with metallurgical requirements highlighted within NACE MR 0175/ISO 15156 for sour oil field production environments. Environmental limits apply to certain materials. Consult latest standard for details. Selected materials also conform to NACE MR0103 for sour refining environments.

Code	Description	
Q15	Certificate of compliance to NACE MR0175/ISO 15156 for wetted materials	
Q25	Certificate of compliance to NACE MR0103 for wetted materials	

Cold temperature application

Code	Description	
B	Extra fill for cold temperature application	

Positive Material Identification (PMI)

Code	Description	
Q76	PMI Verification and Certificate	

Specifications

Liquid level transmitter specifications

Performance specifications

For zero-based spans, reference conditions, silicone oil fill, glass-filled PTFE O-rings, SST materials, coplanar flange (Rosemount 3051SMV, 3051S_C) or ½–14 NPT (Rosemount 3051S_T) process connections, digital trim values set to equal range points.

Conformance to specification (±3σ [Sigma])

Technology leadership, advanced manufacturing techniques, and statistical process control ensure measurement specification conformance to ±3σ or better.

Reference accuracy

Stated reference accuracy equations include terminal based linearity, hysteresis, and repeatability, but does not include analog output reference accuracy of ±0.005% of span.

Table 14: DP Total Accuracy for Enhanced ERS System Performance

Includes full ambient and temperature range from –40 to 85 °C (–40 to 185 °F) requires two transmitters with identical sensor ranges. Specification are only applicable for spans down to 10:1.

Sensor type	3051SAM_ _G2, 3051SAL_ _G2 250 inH_2O (622.1 mbar)	3051SAM_ _G3, 3051SAL_ _G3 1000 inH_2O (2488.4 mbar)	3051SAM_ _T1, 3051SAL_ _T1 30 psi (2.1 bar)	3051SAM_ _T2, 3051SAL_ _T2 150 psi (10.34 bar)	3051SAM_ _G4, 3051SAL_ _G4 300 psi (20.7 bar)	3051SAM_ _T3, 3051SAL_ _T3 800 psi (55.2 bar)
Rosemount™ 3051SAM(1)	0.2 inH_2O (0.5 mbar)	0.6 inH_2O (1.4 mbar)	0.9 inH_2O (2.2 mbar)	1.5 inH_2O (4.0 mbar)	6.2 inH_2O (15 mbar)	7.8 inH_2O (19 mbar)
Rosemount 3051SAL with direct mount seal types and sizes below(2) ■ FF, FC, PF ≥ 2-in./ DN50 ■ EF ≥ 3-in./DN80 ■ All RT, RF, RC, SS ■ SC ≥ 2.5-in.	2.2 inH_2O (5.5 mbar)	2.3 inH_2O (5.8 mbar)	3.0 inH_2O (7.5 mbar)	3.2 inH_2O (8.0 mbar)	6.5 inH_2O (16 mbar)	8.3 inH_2O (21 mbar)
Rosemount 3051SAL with other seal types and sizes	Consult Instrument Toolkit™ for performance.					

(1) *For Rosemount 3051SAM assembled to a Rosemount 1199 or 1299 Diaphragm Seal, use Rosemount 3051SAL specification for identical seal types and sizes.*

(2) *For Rosemount 3051SAL with direct mount seals, specification applies to process temperatures from -45 to 205 °C and excludes diaphragm option code SC, 6-mil diaphragm thickness. Seal types outside these parameters will require a performance calculation.*

Table 15: DP Reference Accuracy of Rosemount 3051S ERS System

	Ultra	Classic
Two coplanar gauge sensors (Rosemount 3051SAM_ _G)		
Ranges 2–4	±0.035% of DP span	±0.049% of DP span
Range 5	±0.071% of DP span	±0.092% of DP span
Two coplanar (Rosemount 3051SAM_ _A)		
Ranges 1–4	±0.035% of DP span	±0.049% of DP span

Table 15: DP Reference Accuracy of Rosemount 3051S ERS System *(continued)*

Two in-line gauge sensors (Rosemount 3051SAM_ _T) Two in-line absolute sensors (Rosemount 3051SAM_ _E)		
Ranges 1–4	±0.035% of DP span	±0.049% of DP span
Two liquid level sensors (Rosemount 3051SAL)		
Ranges 1–5	±0.092% of DP span	±0.092% of DP span

Table 16: Reference Accuracy for FOUNDATION™ Fieldbus and Wireless Devices

For FOUNDATION Fieldbus and wireless devices, use calibrated range in place of span.		
Sensor type	**Ultra**	**Classic**
Rosemount 3051SAM(1)(2)	±0.025% of Span For spans less than 10:1, ±(0.005% URL + 0.015% span)	±0.035% of Span. For spans less than 10:1, ±(0.005% URL + 0.015% span)
Rosemount 3051SAL_C	±0.055% of Span. For spans less than 10:1, ±(0.005% URL + 0.015% span)	±0.065% of Span. For spans less than 10:1, ±(0.005% URL + 0.015% span)
Rosemount 3051SMV assembled to Rosemount 1199 or 1299 (Code B11)	N/A	±0.065% span For spans less than 10:1, ±(0.005% URL + 0.015% span)
Rosemount 3051L Rosemount 3051C or 3051T assembled to Rosemount 1199 or 1299 (code S1)	±0.075% of Span. For spans less than 10:1, ±(0.005% URL + 0.025% span)	
Rosemount 2051L Rosemount 2051C or 2051T assembled to Rosemount 1199 or 1299 (code S1)	±0.075% of Span. For spans less than 10:1, ±(0.005% URL + 0.025% span)	

(1) *Stated reference accuracy equations include terminal based linearity, hysteresis, and repeatability, but does not include analog only reference accuracy of ±0.005% of span.*
(2) *For the Rosemount 3051SAM with 1199 or 1299 assemble to code B11, use 3051SAL_C specifications.*

Warranty

Warranty details can be found in Emerson™ Terms and Conditions of Sale, Document 63445, Rev G (10/06).

Models(1)	Ultra/Enhanced	Classic
Rosemount 3051SAM	15-year limited warranty(2)	1-year limited warranty(3)

(1) *Warranty details can be found in Emerson Terms and Conditions of Sale, Document 63445, Rev G (10/06).*
(2) *Rosemount Ultra transmitter has a limited warranty of fifteen (15) years from date of shipment. All other provisions of Emerson standard limited warranty remains the same.*
(3) *Goods are warranted for twelve (12) months from the date of initial installation or eighteen (18) months from the date of shipment by seller, whichever period expires first.*

Dynamic performance

Rosemount Level Transmitters

Rosemount 3051SAL_C, 3051L, and 2051L models - have an 4–20 mA HART® (1–5 Vdc HART Low Power) update rate of 22 updates per second.

ERS Systems

Rosemount 3051SAM, 3051SAL_P, and 3051SAL_S models - have an 4–20 mA HART (1–5 Vdc HART Low Power) update rate of 11 updates per second. See Rosemount 3051SAL_C Wireless self-organizing networks for *Wireless*HART® update rates. For total response time, see Instrument Toolkit™.

Ambient temperature effect

See Instrument Toolkit.

Mounting position effects

With liquid level remote mount seal in vertical plane, zero shift of up to ±1 inH_2O (2.49 mbar); with remote mount seal in horizontal plane, zero shift of up to ±5 inH_2O (12.45 mbar) plus extension length on extended units; all zero shifts can be zeroed; no span effect.

Vibration effect

Rosemount 3051SAM 3051SAL	Less than ±0.1% of URL when tested per the requirements of IEC60770-1 field or pipeline with high vibration level (10–60 Hz 0.21mm displacement peak amplitude/60–2000 Hz 3g). For Housing Style codes 1J, 1K, 1L, 2J, and 2M: Less than ±0.1% of URL when tested per the requirements of IEC60770-1 field with general application or pipeline with low vibration level (10–60 Hz 0.15 mm displacement peak amplitude/60–500 Hz 2g).
Rosemount 3051L	Measurement effect due to vibrations is negligible except at resonance frequencies. When at resonance frequencies, vibration effect is less than ±0.1% of URL per g when tested between 15 and 2000 Hz in any axis relative to pipe-mounted process conditions.
Rosemount 2051L	Less than ±0.1% of URL when tested per the requirements of IEC60770-1 field or pipeline with high vibration level (10–60 Hz 0.21 mm displacement peak amplitude/60–2000 Hz 3 g).

Power supply effect

Less than ±0.005 percent of calibrated span per volt.

Transient protection (option T1)

Rosemount 3051SAM 3051SAL	Meets IEEE C62.41.2-2002, Location Category B 6 kV crest (0.5 µs–100 kHz) 3 kA crest (8 × 20 microseconds) 6 kV crest (1.2× 50 microseconds).
Rosemount 3051L	Meets IEEE C62.41, Category B 6 kV crest (0.5 µs–100 kHz) 3 kV crest (8 × 20 microseconds) 6 kV crest (1.2 × 50 microseconds).
Rosemount 2051L	Meets IEEE C62.41, Location Category B 6 kV crest (0.5 µs–100 kHz) 3 kV crest (8 × 20 microseconds) 6 kV crest (1.2 × 50 microseconds).

Electromagnetic compatibility (EMC)

Meets all industrial environment requirements of EN61326 and NAMUR NE-21. Maximum deviation < 1% Span during EMC disturbance.

Rosemount 3051S

Note
NAMUR NE-21 does not apply to Wireless (Transmitter output code X) or FOUNDATION™ Fieldbus (Transmitter output code F) or ERS configurations or Junction Box or Remote Display (housing styles 2A-2C, 2E-2G, 2J, 2M).

Note
During surge event, device may exceed maximum EMC deviation limit or reset; however, device will self-recover and return to normal operation within specified start-up time.

Note
During ESD event, Wireless device (Transmitter output code X) may exceed maximum EMC deviation limit or reset, however, device will self-recover and return to normal operation within specified start-up time.

Note
For devices with Junction Box housing or Remote Display (housing styles 2A-2C, 2E-2G, 2J, 2M) testing performed with shielded cable.

Rosemount 3051L/2051L

Note
NAMUR NE-21 does not apply to Low-Power (Transmitter output option code M) or Wireless (Transmitter output code X).

Note
During surge event, device with 4-20 mA (Transmitter output option code A) may exceed maximum EMC deviation limit or reset; however, device will self-recover and return to normal operation within specified start-up time.

Functional specifications

Range and sensor limits

Table 17: Rosemount 3051SAM_ _G, 3051SAL_ _D, 3051SAL_ _G

Range	Minimum span		Range limits		
	Ultra	Classic	Upper (URL)	Lower (LRL)	
				3051SAL_G(1)(2)	3051SAL_D(1)
2	1.3 inH_2O (3.11 mbar)	2.5 inH_2O (6.23 mbar)	250.0 inH_2O (0.62 bar)	–250.0 inH_2O (–0.62 bar)	–250.0 inH_2O (–0.62 bar)
3	5.0 inH_2O (12.4 mbar)	10.0 inH_2O (24.9 mbar)	1000.0 inH_2O (2.49 bar)	–393.0 inH_2O (–979 mbar)	–1000.0 inH_2O (–2.49 bar)
4	1.5 psi (103.4 mbar)	3.0 psi (206.8 mbar)	300.0 psi (20.7 bar)	–14.2 psig (–979 mbar)	–300.0 psi –20.7 bar)
5	10.0 psi (689.5 mbar)	20.0 psi (1.38 bar)	2000.0 psi (137.9 bar)	–14.2 psig (–979 mbar)	–2000.0 psi (–137.9 bar)

(1) *When specifying a Rosemount 3051SAL Ultra, use Classic minimum span. Minimum span limits may also be limited by the remote seal that is specified with the system.*
(2) *Assumes atmospheric pressure of 14.7 psig (1 bar).*

Table 18: Rosemount 3051SAM_ _A, 3051SAL_ _A

When specifying a Rosemount 3051SAL Ultra, use Classic minimum span. Minimum span limits may also be limited by the remote seal that is specified with the system.

Range	Minimum span		Range and sensor limits	
	Ultra	Classic	Upper (URL)	Lower (LRL)
1	0.3 psia (20.7 mbar)	0.3 psia (20.7 mbar)	30 psia (2.07 bar)	0 psia (0 bar)
2	0.75 psia (51.7 mbar)	1.5 psia (0.103 bar)	150 psia (10,34 bar)	0 psia (0 bar)
3	4 psia (275.8 mbar)	8 psia (0.55 bar)	800 psia (55.16 bar)	0 psia (0 bar)
4	20 psia (1.38 bar)	40 psia (2.76 bar)	4000 psia (275.8 bar)	0 psia (0 bar)

Table 19: Rosemount 3051SAM_ _T, 3051SAM_ _E, 3051SAL_ _T, 3051SAL_ _E

Range	Minimum span		Range and sensor limits		
	Ultra	Classic	Upper (URL)	Lower (LRL) (Abs.)	Lower(1) (LRL) (Gauge)
1	0.3 psi (20.7 mbar)	0.3 psi (20.7 mbar)	30 psi (2.07 bar)	0 psia (0 bar)	–14.7 psig (–1.01 bar)
2	0.75 psi (51.7 mbar)	1.5 psi (0.103 bar)	150 psi (10.34 bar)	0 psia (0 bar)	–14.7 psig (–1.01 bar)
3	4 psi (275.8 mbar)	8 psi (0.55 bar)	800 psi (55.16 bar)	0 psia (0 bar)	–14.7 psig (–1.01 bar)
4	20 psi (1.38 bar)	40 psi (2.76 bar)	4000 psi (275.8 bar)	0 psia (0 bar)	–14.7 psig (–1.01 bar)

Table 19: Rosemount 3051SAM_ _T, 3051SAM_ _E, 3051SAL_ _T, 3051SAL_ _E *(continued)*

Range	Minimum span		Range and sensor limits		
	Ultra	Classic	Upper (URL)	Lower (LRL) (Abs.)	Lower[(1)] (LRL) (Gauge)
5	1000 psi (68.9 bar)	2000 psi (137.9 bar)	10000 psi (689.5 bar)	0 psia (0 bar)	–14.7 psig (–1.01 bar)

(1) *Assumes atmospheric pressure of 14.7 psig (1 bar).*

Table 20: Rosemount 3051L

Range	Minimum span	Range and sensor limits		
		Upper (URL)	Lower (LRL)	
			Rosemount 3051L Differential	Rosemount 3051L Gauge[(1)]
2	2.5 inH_2O (6.2 mbar)	250 inH_2O (0.62 bar)	–250 inH_2O (–0.62 bar)	–250 inH_2O (–0.62 bar)
3	10 inH_2O (24.9 mbar)	1000 inH_2O (2.49 bar)	–1000 inH_2O (–2.49 bar)	-393 inH_2O (-979 mbar)
4	3 psi (0.20 bar)	300 psi (20.6 bar)	–300 psi (–20.6 bar)	-14.2 psig (979 mbar)
5	20 psi (1.38 bar)	2000 psi (137.9 bar)	N/A	N/A

(1) *Assumes atmospheric pressure of 14.7 psig.*

Table 21: Rosemount 2051L

Range	Minimum span	Range and sensor limits		
		Upper (URL)	Lower (LRL)	
			Rosemount 2051L Differential	Rosemount 2051L Gauge[(1)]
2	2.5 inH_2O (6.2 mbar)	250 inH_2O (0.62 bar)	–250 inH_2O (–0.62 bar)	–250 inH_2O (–0.62 bar)
3	10 inH_2O (24.9 mbar)	1000 inH_2O (2.49 bar)	–1000 inH_2O (–2.49 bar)	–393 inH_2O (–979 mbar)
4	3 psi (0.207 bar)	300 psi (20.6 bar)	–300 psi (–20.7 bar)	–14.2 psig (–979 mbar)

(1) *Assumes atmospheric pressure of 14.7 psig.*

Service

Liquid, gas, and vapor applications

Protocols

4–20 mA (output code A)

Output

Two-wire 4–20 mA, user-selectable for linear or square root output. Digital process variable superimposed on 4–20 mA signal, available to any host that conforms to the HART® protocol.

Power supply

External power supply required. Standard transmitter (4–20 mA) operates on 10.5 to 42.4 Vdc with no load. The Rosemount™ 3051S ERS System operates on 16 to 42.4 Vdc with no load.

Load limitations

Maximum loop resistance is determined by the voltage level of the external power supplied as described by:

Figure 7: Standard HART Transmitter

Maximum Loop Resistance = 43.5 * (Power supply voltage – 10.5)

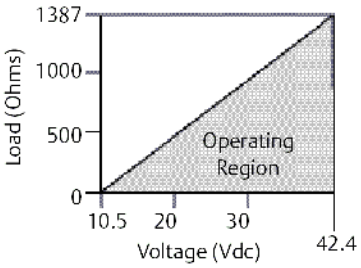

The Field Communicator requires a minimum loop resistance of 250 Ω for communication.

Figure 8: Rosemount 3051S ERS System

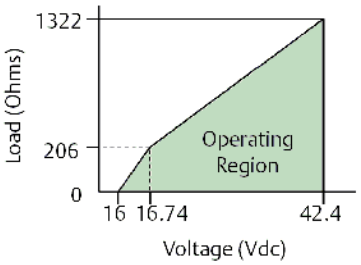

If supply voltage ≤ 16.74 Vdc:

Maximum Loop Resistance = 277 * (Power supply voltage – 16.0)

If supply voltage > 16.74 Vdc:

Maximum Loop Resistance = 43.5 * (Power supply voltage – 12.0)

The Field Communicator requires a minimum loop resistance of 250 Ω for communication.

Indication

Optional two-line LCD display

Optional 3-line Graphical Display with Backlight and Local Language

- Languages include: English, Chinese, French, German, Italian, Portuguese, Russian, Spanish

Bluetooth® connectivity

Typical Range: At least 50 ft. (15 m) line of sight.

Maximum communication range will vary depending on orientation, obstacles (such as person, metal, wall, etc.), or electromagnetic environment.

FOUNDATION™ Fieldbus (output code F)

Power supply

External power supply required; transmitters operate on 9.0 to 32.0 Vdc transmitter terminal voltage.

Current draw

17.5 mA for all configurations (including LCD display option)

FOUNDATION Fieldbus function block execution times

Block	Execution time (milliseconds)		
	3051SAL_C	3051L	2051L
Resource	N/A	N/A	N/A
Transducer	N/A	N/A	N/A
LCD Block	N/A	N/A	N/A
Analog Input 1, 2	20	30	35
PID	35(1)	45	45
Input Selector	20	30	30
Arithmetic	20	35	35
Signal Characterizer	20	40	40
Integrator	20	35	35
Output Splitter	20	N/A	N/A
Control Selector	20	N/A	N/A

(1) *PID with Auto-tune.*

FOUNDATION Fieldbus parameters

Schedule entries: 7 (max.)

Links: 20 (max.)

Virtual Communications Relationships (VCR): 12 (max.)

Standard function blocks

Resource block

Contains hardware, electronics, and diagnostic information.

Transducer block

Contains actual sensor measurement data including the sensor diagnostics and the ability to trim the pressure sensor or recall factory defaults.

LCD block

Configures the local display.

Two analog input blocks

Processes the measurements for input into other function blocks. The output value is in engineering units or custom and contains a status indicating measurement quality.

PID block

Contains all logic to perform PID control in the field including cascade and feedforward.

Backup Link Active Scheduler (LAS)

The transmitter can function as a Link Active Scheduler if the current link master device fails or is removed from the segment.

Advanced control function block suite (option code A01)

Input selector block

Selects between inputs and generates an output using specific selection strategies such as minimum, maximum, midpoint, average, or first “good.”

Arithmetic block

Provides pre-defined application-based equations including flow with partial density compensation, electronic remote seals, hydrostatic tank gauging, ratio control, and others.

Signal characterizer block

Characterizes or approximates any function that defines an input/output relationship by configuring up to twenty X, Y coordinates. The block interpolates an output value for a given input value using the curve defined by the configured coordinates.

Integrator block

Compares the integrated or accumulated value from one or two variables to pre-trip and trip limits and generates discrete output signals when the limits are reached. This block is useful for calculating total flow, total mass, or volume over time.

FOUNDATION™ Fieldbus diagnostics suite (option code D01)

The FOUNDATION Fieldbus Diagnostics provide Abnormal Situation Prevention (ASP) indication. The integral statistical process monitoring (SPM) technology calculates the mean and standard deviation of the process variable 22 times per second. The Rosemount 3051S_L and 3051L use these values and highly flexible configuration options for customization to detect many user-defined or application specific abnormal situations (e.g. detecting plugged impulse lines and fluid composition change).

PROFIBUS® PA (output code W)

Profile version

3.02

Power supply

External power supply required; transmitters operate on 9.0 to 32.0 Vdc transmitter terminal voltage.

Current draw

17.5 mA for all configurations (including LCD display option)

Output update rate

Four times per second

Standard function blocks

Analog input (AI block)

The AI function block processes the measurements and makes them available to the host device. The output value from the AI block is in engineering units and contains a status indicating the quality of the measurement.

Physical block

The physical block defines the physical resources of the device including type of memory, hardware, electronics, and diagnostic information.

Transducer block

Contains actual sensor measurement data including the sensor diagnostics and the ability to trim the pressure sensor or recall factory defaults.

Local Operator Interface

Optional external configuration buttons

Rosemount 3051SAL_C Wireless self-organizing networks

Output

IEC 62591 (*Wireless*HART®), 2.4 GHz DSSS

Radio frequency power output from antenna

External antenna (WK option): Maximum of 10 mW (10 dBm) EIRP

Extended range, external antenna (WM option): Maximum of 18 mW (12.5 dBm) EIRP

High-gain, remote antenna (WN option): Maximum of 40 mW (16 dBm) EIRP

Local display

The optional seven-digit LCD display can display primary variable in engineering units, percent of range, sensor module temperature, and electronics temperature. Display updates at update rate up to once per minute. The display updates based on the wireless update rate.

Update rate

User selectable 1 second to 60 minutes.

Power module

Field replaceable, keyed connection eliminates the risk of incorrect installation, Intrinsically Safe Lithium-thionyl chloride Power Module with polybutadine terephthalate (PBT) enclosure. Ten-year life at one-minute update rate.

Note

Reference conditions are 70 °F (21 °C), and routing data for three additional network devices. Continuous exposure to ambient temperature limits of –40 °F or 185 °F (–40 °C or 85 °C) may reduce specified life by less than 20 percent.

Overpressure limits

Limit is 0 psia to the flange rating or sensor rating, whichever is lower.

Table 22: Rosemount 3051L, 2051L, and Level Flange Rating Limits

Standard	Type	CS Rating	SST Rating
ASME	Class 150	285 psig	275 psig
ASME	Class 300	740 psig	720 psig
ASME	Class 600	1480 psig	1440 psig
At 100 °F (38 °C), the rating decreases with increasing temperature, per ASME B16.5.			
DIN	PN 10–40	40 bar	40 bar
DIN	PN 10/16	16 bar	16 bar
DIN	PN 25/40	40 bar	40 bar
At 122 °F (50 °C), the rating decreases with increasing temperature per EN 1092-1 Annex F.			

Temperature limits

Ambient

–40 to 185 °F (–40 to 85 °C) With LCD display[1][2]: –40 to 175 °F (–40 to 80 °C) With option code P0: –20 to 185 °F (–29 to 85 °C)

Storage

–50 to 185 °F (–46 to 85 °C) With LCD display: –40 to 185 °F (–40 to 85 °C) With wireless output: –40 to 185 °F (–40 to 85 °C)

(1) LCD display may not be readable and LCD display updates will be slower at temperatures below –4 °F (–20 °C).
(2) Graphical LCD display updates will be slower at temperatures below 32 °F (-0 °C). Graphical LCD display may not be readable below -22 °F (-30 °C).

Process

Table 23: Rosemount 3051SAM ERS Process temperature Limits (Gauge/Absolute Sensor)

Configuration	Coplanar gauge/absolute sensor (Rosemount 3051SAM_ _G, 3051SAM_ _A)	In-line gauge sensor/absolute sensor (Rosemount 3051SAM_ _T, 3051SAM_ _E)
Silicone fill fluid[1]	N/A	–40 to 250 °F (–40 to 121 °C)[3]
with coplanar flange[2]	–40 to 250 °F (–40 to 121 °C)[3]	N/A
with traditional flange[2]	–40 to 300 °F (–40 to 149 °C)[3]	N/A
with level flange[2]	–40 to 300 °F (–40 to 149 °C)[3]	N/A
with Rosemount 305 Integral Manifold[2]	–40 to 300 °F (–40 to 149 °C)[3]	N/A
Inert fill fluid[2][4]	–40 to 185 °F (–40 to 85 °C)[5]	–22 to 250 °F (–30 to 121 °C)[3]

(1) *Process temperatures above 185 °F (85 °C) require de-rating the ambient limits by a 1.5:1 ratio. For example, for process temperature of 195 °F (91 °C), new ambient temperature limit is equal to 170 °F (77 °C). This can be determined as follows: (195 °F – 185 °F) × 1.5 = 15 °F, 185 °F –15 °F = 170 °F.*
(2) *Process temperatures above 185 °F (85 °C) require de-rating the ambient limits by a 1:1 ratio.*
(3) *220 °F (104 °C) limit in vacuum service; 130 °F (54 °C) for pressures below 0.5 psia.*
(4) *Not available with Rosemount 3051SAM_ _A.*
(5) *160 °F (71 °C) limit in vacuum service.*

Fill fluid specifications

Note
Temperature limits are reduced in vacuum service. For more information on fill fluids see Rosemount DP Level Fill Fluid Specification Technical Note.

Table 24: Fill Fluid Specifications

Seal fill fluid		Specific gravity at 77 °F (25 °C)	Viscosity (cSt) at 77 °F (25 °C)	Temperature limits[1][2]			
				No extension	2-in. (50 mm) extension	4-in. (100 mm) extension	Capillary
D	Silicone 200	0.934	9.5	–49 to 401 °F (–45 to 205 °C)	–49 to 401 °F (–45 to 205 °C)	–49 to 401 °F (–45 to 205 °C)	–49 to 401 °F (–45 to 205 °C)
F	Silicone 200 for vacuum applications	0.934	9.5	For use in vacuum applications below 14.7 psia (1 bar-a), refer to vapor pressure curves in Rosemount DP Level Fill Fluid Specification Technical Note.			
J [3]	Tri-Therm 300	0.795	8.6	–40 to 401 °F (–40 to 205 °C)	–40 to 464 °F (–40 to 240 °C)	–40 to 572 °F (–40 to 300 °C)	–40 to 572 °F (–40 to 300 °C)
Q	Tri-Therm 300 for vacuum applications	0.795	8.6	For use in vacuum applications below 14.7 psia (1 bar-a), refer to vapor pressure curves in Rosemount DP Level Fill Fluid Specification Technical Note.			
H	Inert (Halocarbon)	1.85	6.5	–49 to 320 °F (–45 to 160 °C)	–49 to 320 °F (–45 to 160 °C)	–49 to 320 °F (–45 to 160 °C)	–49 to 320 °F (–45 to 160 °C)

(1) *Temperature limits are reduced in vacuum service. For more information on fill fluids, see Rosemount DP Level Fill Fluid Specification Technical Note.*
(2) *Due to heat transfer to the transmitter, the maximum process temperature of the transmitter will be de-rated if ambient or process temperatures exceed 185 °F (85 °C). Consult Instrument Toolkit to verify the application.*
(3) *This is a food grade fill fluid.*

Figure 9: Thermal Range Expander Temperature Operating Range

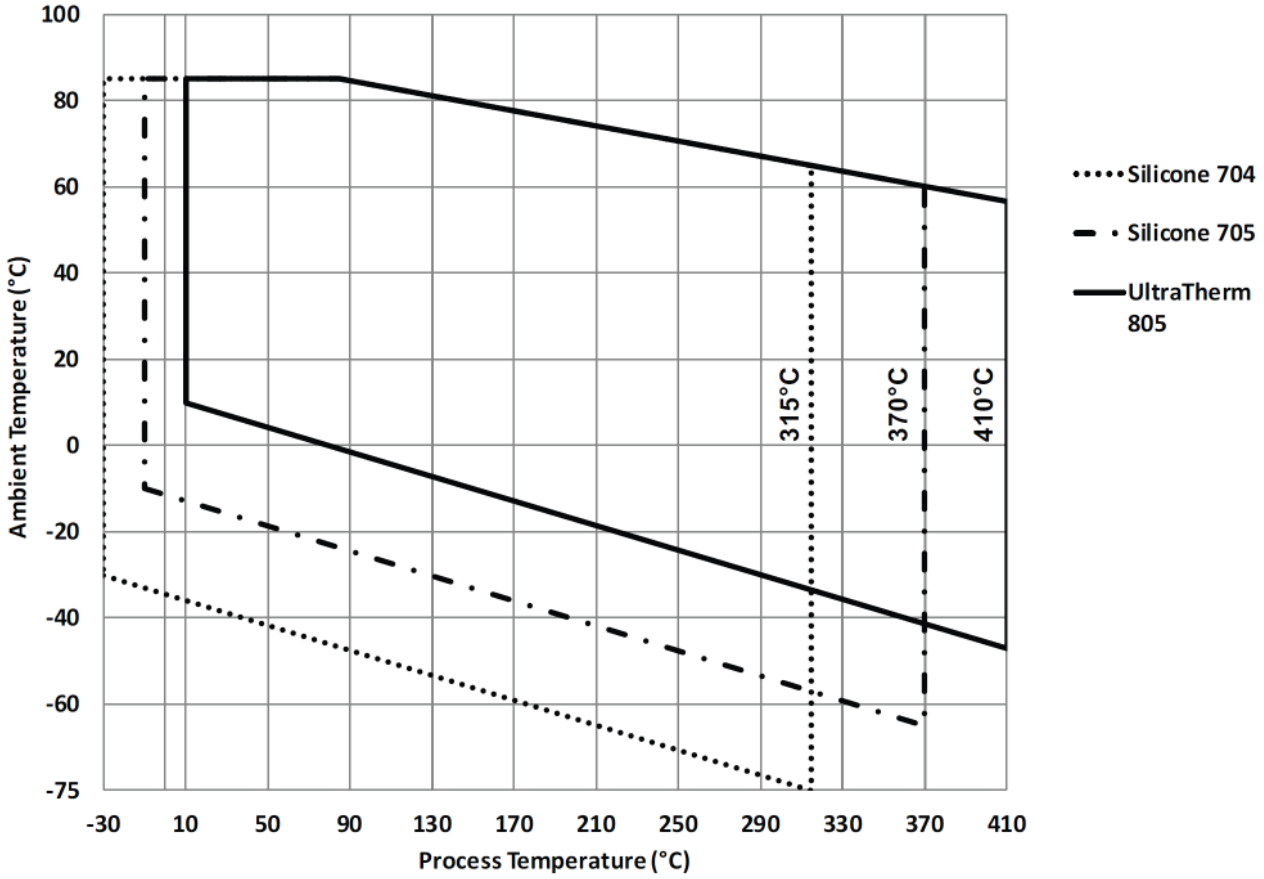

Figure 10: Thermal Optimizer with Silicone 704 Fill Fluid Temperature Limits

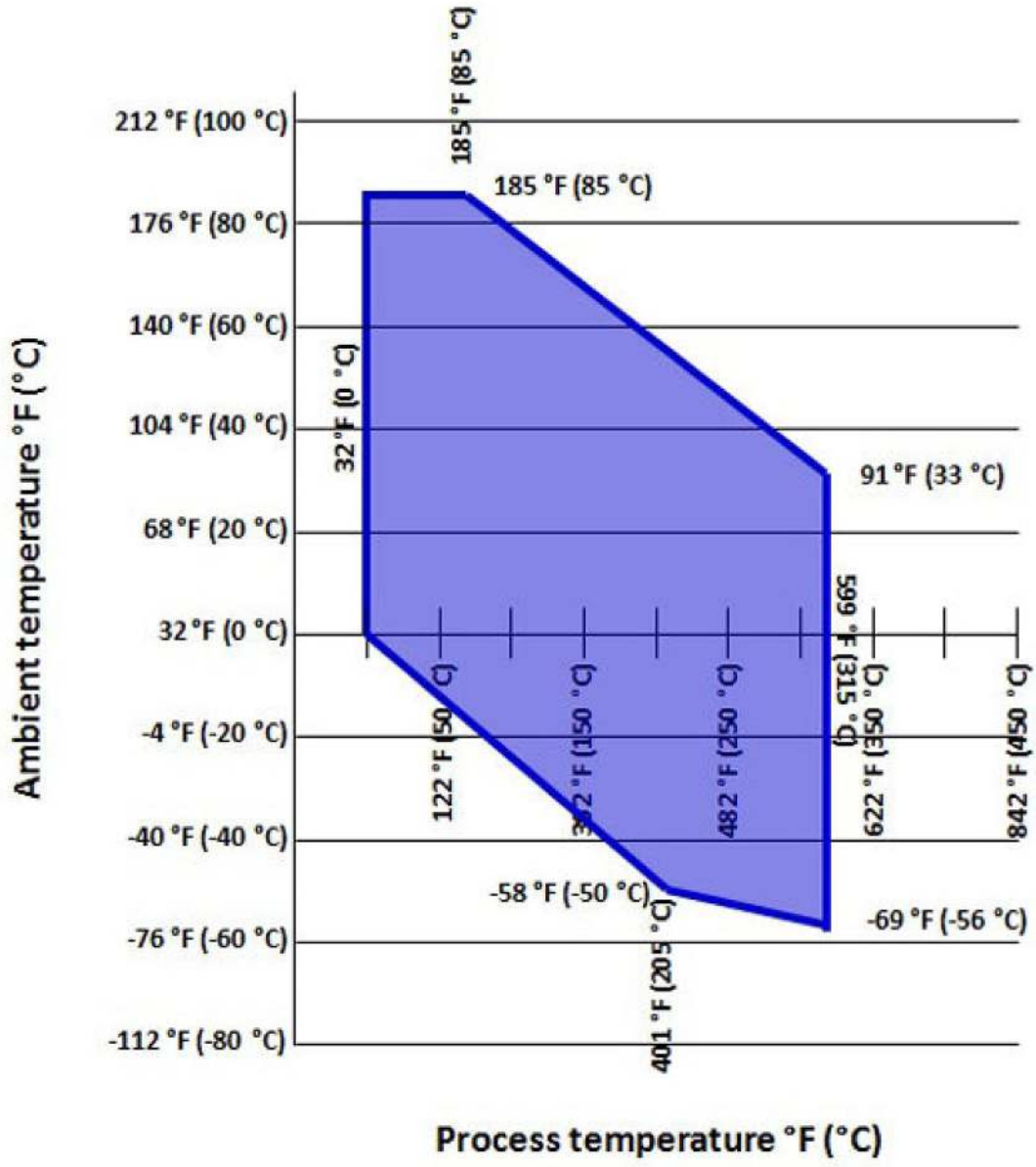

Figure 11: Thermal Optimizer with Silicone 705 Fill Fluid Temperature Limits

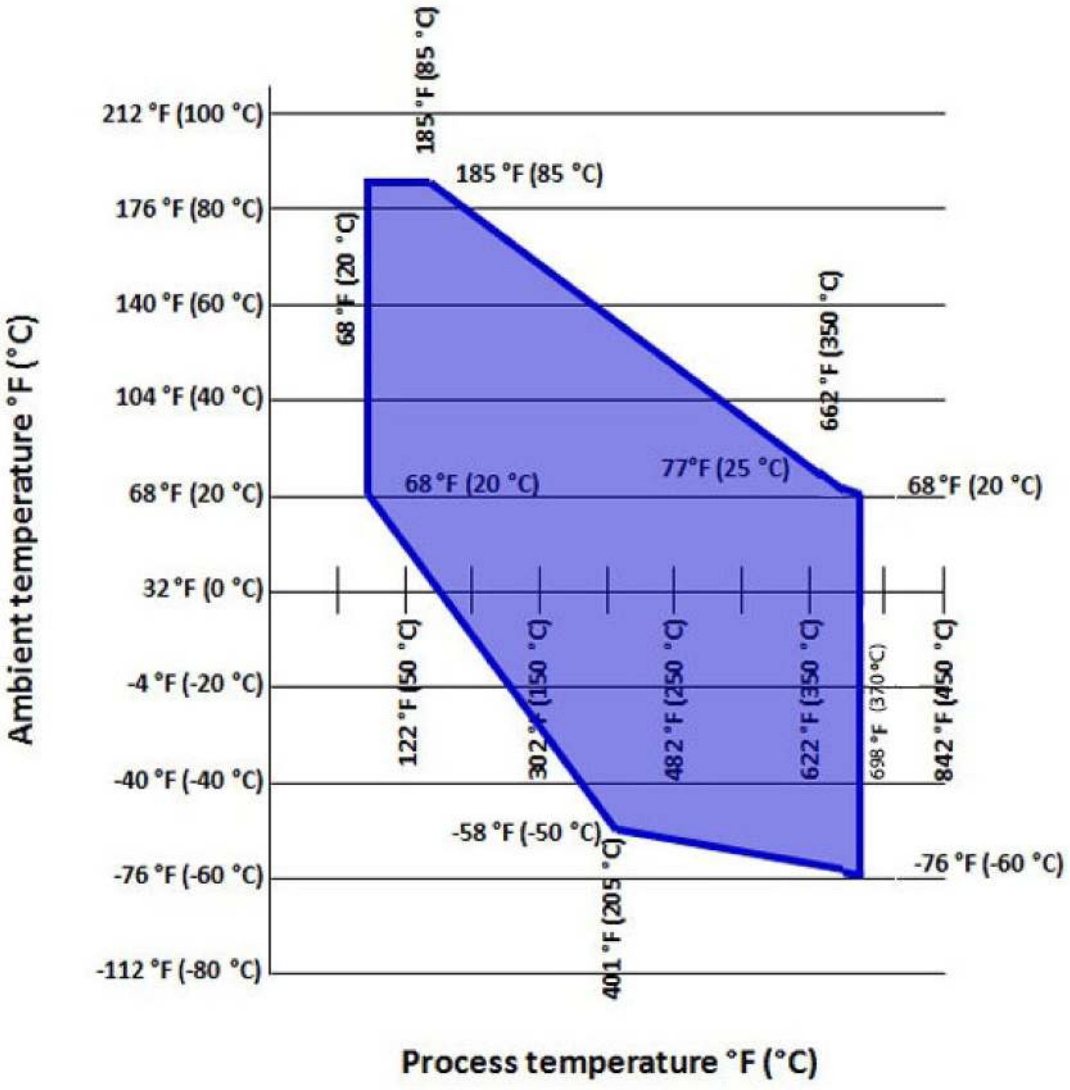

Figure 12: Thermal Optimizer Fill Fluid Temperature Limits

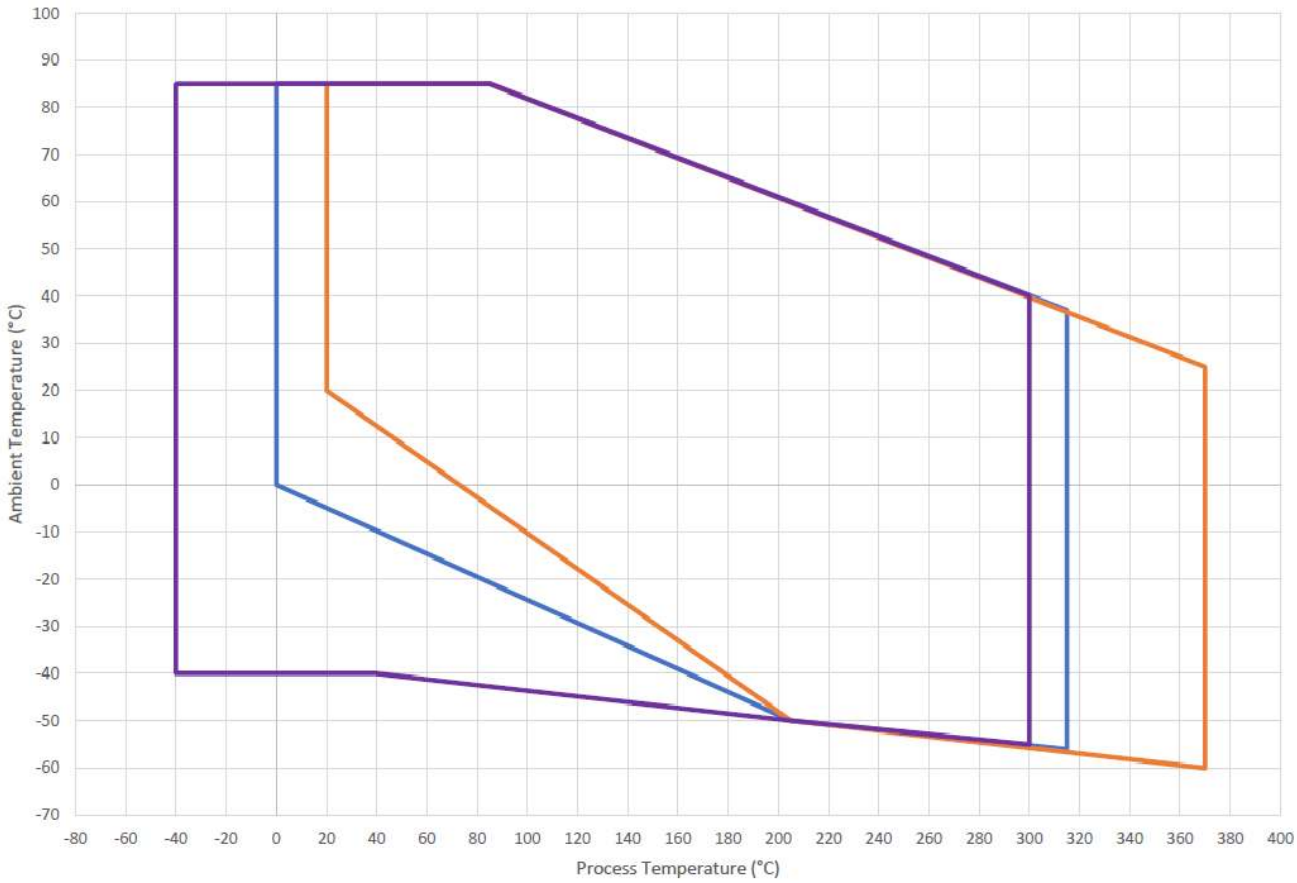

Figure 13: Thermal Optinizer Fill Fluid Temperature Limits for Silicone 704, Silocone 705, and Tri-Therm 300

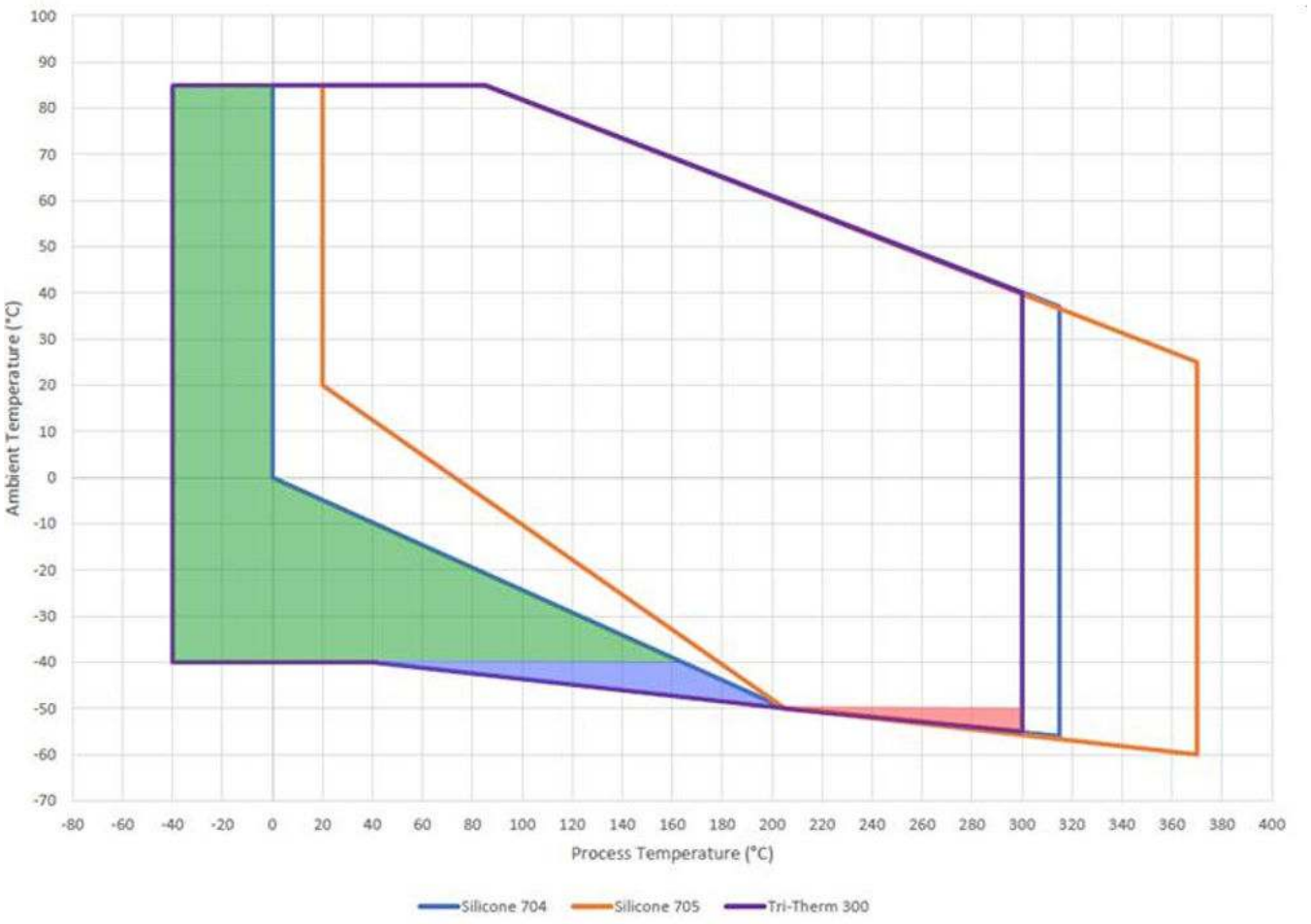

Humidity limits

0–100 percent relative humidity

Turn-on time

Rosemount 3051SAL_C	Performance within specifications less than 2.0 seconds after power is applied to the transmitter.
Rosemount 3051L	Performance within specifications less than 2.0 seconds (10.0 s for PROFIBUS protocol) after power is applied to the transmitter.
Rosemount 2051L	Performance within specifications less than 2.0 seconds after power is applied to the transmitter.
Rosemount ERS System	Performance within specifications less than 6.0 seconds after power is applied.

Volumetric displacement

Less than 0.005-in^3 (0.08 cm^3)

Damping

Software damping is in addition to sensor module response time.

Note
Does not apply to wireless option code X.

Rosemount 3051SAL_C	Analog output response to a step change is user-selectable from 0 to 60 seconds for one time constant.
Rosemount 3051L	Analog output response to a step input change is user-selectable from 0 to 36 seconds for one time constant.
Rosemount 2051L	Analog output response to a step input change is user-selectable from 0 to 25.6 seconds for one time constant.
Rosemount ERS System	The PHI and PLO pressure measurements and the DP calculation may be independently dampened from 0 to 60 seconds for one time constant.

Physical specifications

Material selection

Emerson provides a variety of Rosemount products with various product options and configurations, including materials of construction that can be expected to perform well in a wide range of applications. The Rosemount product information presented is intended as a guide for the purchaser to make an appropriate selection for the application. It is the purchaser's sole responsibility to make a careful analysis of all process parameters (such as all chemical components, temperature, pressure, flow rate, abrasives, contaminants, etc.), when specifying product, materials, options, and components for the particular application. Emerson is not in a position to evaluate or guarantee the compatibility of the process fluid or other process parameters with the product, options, configuration, or materials of construction selected.

Electrical connections

½–14 NPT, PG 13.5, G½, and M20 × 1.5 conduit. HART interface connections fixed to terminal block.

Non-wetted parts

Transmitter flange is CF-3M (cast version of 316L SST, material per ASTM-A743)

Capillary tube is 316L SST

Capillary armor is SST or PVC coated SST

	Rosemount 3051SAL	Rosemount 3051L	Rosemount 2051L
Electrical housing	Low-copper aluminum alloy or CF-8M (Cast 316 SST) NEMA® 4X, IP 66, IP 68 (66 ft. [20 m] for 168 hours)(1)	Low-copper aluminum or CF-3M (Cast version of 316L SST, material per ASTM-A743). NEMA 4X, IP 65, IP 66	Low-copper aluminum or CF-8M (Cast version of 316 SST). Enclosure Type 4X, IP 65, IP 66, IP 68
Coplanar sensor module housing	CF-3M (Cast version of 316LSST, material per ASTM-A743)	CF-3M (Cast version of 316L SST, material per ASTM-A743)	CF-3M (Cast version of 316LSST, material per ASTM-A743)
Bolts	Plated carbon steel per ASTM A449, Type 1 Austenitic 316 SST per ASTM F593 ASTM A453, Class D, Grade 660 SST ASTM A193, Grade B7M alloy steel ASTM A193, Class 2, Grade B8M SST Alloy K–500	ASTM A449, Type 1 (zinc-cobalt plated carbon steel) ASTM F593G, Condition CW1 (Austenitic 316 SST) ASTM A193, Grade B7M (zinc plated alloy steel) Alloy K–500	ASTM A449, Type 1 (zinc-cobalt plated carbon steel) ASTM F593G, Condition CW1 (Austenitic 316 SST) ASTM A193, Grade B7M (zinc plated alloy steel)
Sensor module fill fluid	Silicone or inert halocarbon (Inert is not available with Rosemount 3051S_CA). In-Line series uses Fluorinert™ FC-43	Silicone 200 or Fluorocarbon oil (Halocarbon or Fluorinert FC-43 for Rosemount 3051T)	Silicone 200 or Fluorocarbon oil (Halocarbon or Fluorinert FC-43 for 2051T)
Process fill fluid	SYLTHERM XLT, Silicone 705, Silicone 704, UltraThem 805, Silicone 200,Tri-Therm 300, inert, glycerin and water, Neobee M-20, propylene glycol and water	SYLTHERM XLT, Silicone 705, Silicone 704, Silicone 200, Tri-Therm 300, inert, glycerin and water, Neobee M-20, propylene glycol and water	SYLTHERM XLT, Silicone 705, Silicone 704, Silicone 200, Tri-Therm 300, inert, glycerin and water, Neobee M-20, propylene glycol and water

	Rosemount 3051SAL	Rosemount 3051L	Rosemount 2051L
Paint for aluminum housing	Polyurethane	Polyurethane	Polyurethane
Cover O-ring	Nitrile butadiene (NBR)	Nitrile butadiene (NBR)	Nitrile butadiene (NBR)
Wireless antenna	External Antenna (WK1/WM1): PBT/PC integrated omni-directional antenna Remote Antenna (WN1): Fiberglass omni-directional antenna	N/A	N/A
Power module	Field replaceable, keyed connection eliminates the risk of incorrect installation, Intrinsically Safe Lithium-thionyl chloride Power Module with PBT enclosure	N/A	N/A

(1) *IP 68 not available with wireless output.*

Note
If a lower housing is supplied, the following gaskets are the default gaskets for each seal unless another gasket material is selected.

Rosemount 3051SAL Transmitter default gasket options

Seal	Gaskets
FF	Klinger C-4401 gasket
EF	No gasket is supplied
FC	No gasket is supplied
RC	Klinger C-4401 gasket
RF	Klinger C-4401 gasket
RT	Klinger C-4401 gasket
PF	Klinger C-4401 gasket
SS	Ethylene propylene O-ring

Shipping weights

Table 25: Rosemount 3051SAL Weights without SuperModule Platform, Housing, or Transmitter Options

Weights are listed in lb (kg).

Flange	Flush	2-in. ext.	4-in. ext.	6-in. ext.
2-in., Class 150	9.5 (4.3)	N/A	N/A	N/A
3-in., Class 150	15.7 (7.1)	16.4 (7.4)	17.6 (8.0)	18.9 (8.6)
4-in., Class 150	21.2 (9.6)	20.9 (9.5)	22.1 (10.0)	23.4 (10.6)
2-in., Class 300	11.3 (5.1)	N/A	N/A	N/A
3-in., Class 300	19.6 (8.9)	20.3 (9.2)	21.5 (9.8)	22.8 (10.3)
4-in., Class300	30.4 (13.8)	30.3 (13.7)	31.5 (14.3)	32.8 (14.9)
2-in., Class 600	12.8 (5.8)	N/A	N/A	N/A
3-in., Class 600	22.1 (10.0)	22.8 (10.3)	24.0 (10.9)	25.3 (11.5)
DN 50/PN 40	11.3 (5.1)	N/A	N/A	N/A

Table 25: Rosemount 3051SAL Weights without SuperModule Platform, Housing, or Transmitter Options *(continued)*

Flange	Flush	2-in. ext.	4-in. ext.	6-in. ext.
DN 80/PN 40	16.0 (7.3)	16.7 (7.6)	17.9 (8.1)	19.2 (8.7)
DN 100/PN 10/16	11.2 (5.1)	11.9 (5.4)	13.1 (5.9)	14.4 (6.5)
DN 100/PN 40	12.6 (5.7)	13.3 (6.0)	14.5 (6.6)	15.8 (7.1)

Table 26: Rosemount 3051SAM and 3051SAL Transmitter Option Weights

Option code	Option	Add lb (kg)
1J, 1K, 1L	SST Plantweb™ housing	3.5 (1.6)
2J	SST Junction box housing	3.4 (1.5)
7J	SST Quick Connect	0.4 (0.2)
2A, 2B, 2C	Aluminum junction box housing	1.1 (0.5)
1A, 1B, 1C	Aluminum Plantweb housing	1.1 (0.5)
M5	LCD display for aluminum Plantweb housing(1) LCD display for SST Plantweb housing(1) Aluminum standard cover SST standard cover Aluminum display cover SST display cover Wireless extended cover LCD display(2) Junction box terminal block Plantweb terminal block Power module Thermal Range Expander	0.8 (0.4) 1.6 (0.7) 0.4 (0.2) 1.3 (0.6) 0.7 (0.3) 1.5 (0.7) 0.7 (0.3) 0.1 (0.04) 0.2 (0.1) 0.2 (0.1) 0.5 (0.2) 4.1 (1.9)

(1) *Includes LCD display and display cover.*
(2) *Display only.*

Table 27: Rosemount 3051L Weights without Options

Weights are listed in lb (kg).

Flange	Flush	2-in. ext.	4-in. ext.	6-in. ext.
2-in., Class 150	12.5 (5.7)	N/A	N/A	N/A
3-in., Class 150	17.5 (7.9)	19.5 (8.8)	20.5 (9.3)	21.5 (9.7)
4-in., Class 150	23.5 (10.7)	26.5 (12.0)	28.5 (12.9)	30.5 (13.8)
2-in., Class 300	17.5 (7.9)	N/A	N/A	N/A
3-in., Class 300	22.5 (10.2)	24.5 (11.1)	25.5 (11.6)	26.5 (12.0)
4-in., Class 300	32.5 (14.7)	35.5 (16.1)	37.5 (17.0)	39.5 (17.9)
2-in., Class 600	15.3 (6.9)	N/A	N/A	N/A
3-in., Class 600	25.2 (11.4)	27.2 (12.3)	28.2 (12.8)	29.2 (13.2)
DN 50/PN 40	13.8 (6.2)	N/A	N/A	N/A
DN 80/PN 40	19.5 (8.8)	21.5 (9.7)	22.5 (10.2)	23.5 (10.6)
DN 100/ PN 10/16	17.8 (8.1)	19.8 (9.0)	20.8 (9.5)	21.8 (9.9)
DN 100/ PN 40	23.2 (10.5)	25.2 (11.5)	26.2 (11.9)	27.2 (12.3)

Table 28: Rosemount 3051L Transmitter Option Weights

Code	Option	Add lb (kg)
J, K, L, M	Stainless steel housing (T)	3.9 (1.8)
J, K, L, M	Stainless steel housing (C, L, H, P)	3.1 (1.4)
M5	LCD display for aluminum housing	0.5 (0.2)
M6	LCD display for SST housing	1.25 (0.6)

Table 29: Rosemount 2051L Weights without Options

Weights are listed in lb (kg).

Flange	Flush	2-in. ext.	4-in. ext.	6-in. ext.
2-in., Class 150	12.5 (5.7)	N/A	N/A	N/A
3-in., Class 150	17.5 (7.9)	19.5 (8.8)	20.5 (9.3)	21.5 (9.7)
4-in., Class 150	23.5 (10.7)	26.5 (12.0)	28.5 (12.9)	30.5 (13.8)
2-in., Class 300	17.5 (7.9)	N/A	N/A	N/A
3-in., Class 300	22.5 (10.2)	24.5 (11.1)	25.5 (11.6)	26.5 (12.0)
4-in., Class 300	32.5 (14.7)	35.5 (16.1)	37.5 (17.0)	39.5 (17.9)
DN 50/PN 40	13.8 (6.2)	N/A	N/A	N/A
DN 80/PN 40	19.5 (8.8)	21.5 (9.7)	22.5 (10.2)	23.5 (10.6)
DN 100/ PN 10/16	17.8 (8.1)	19.8 (9.0)	20.8 (9.5)	21.8 (9.9)
DN 100/ PN 40	23.2 (10.5)	25.2 (11.5)	26.2 (11.9)	27.2 (12.3)

Table 30: Rosemount 2051L Transmitter Option Weights

Code	Option	Add lb (kg)
J, K, L, M	Stainless steel housing	3.9 (1.8)
M5	LCD display for aluminum housing	0.5 (0.2)

Rosemount 1199 Seal specifications

Functional specifications

Hygienic seal approvals

3-A

The following seals are 3-A® approved and labeled:

- SCW (Tri-Clover style Tri-Clamp seal)
- STW (Thin wall tank spud seal)
- EES Flanged Tank spud extended seal
- VCS (In-line Tri-Clover style Tri-Clamp seal)
- SVS (Tuchenhagen VARIVENT® compatible seal)
- SHP (Cherry-Burrell® "I" line style seal)
- SLS (Dairy process connection - female thread)

EHEDG (Type EL Class I)

The following seals are EHEDG Type EL Class I approved and labeled:

- SCW (Tri-Clover style Tri-Clamp seal)
- VCS (In-line Tri-Clover style Tri-Clamp seal)
- SVS (Tuchenhagen VARIVENT compatible seal
- SLS (Dairy process connection - female thread)

Ensure gasket selected for installation is approved to meet both application and EHEDG certification requirements.

Hygienic fill fluids

The hygienic fill fluids glycerin and water and Propylene Glycol and water meet United States Pharmacopeia (USP) and Food Chemical Codex (FCC) requirements and is Generally Recognized as Safe (GRAS) in accordance with the FDA Code of Federal Regulations Title 21. The hygienic fill fluid Neobee M-20 is approved under 21CFR 172.856 as a direct food additive and under 21 CFR 174.5 as an indirect food additive. Tri-Therm 300 is registered by NSF as meeting FDA 21 CFR regulatory requirements and is acceptable for use where there is possibility of incidental food contact (HT 1).

Hygienic O-rings

The EPDM, Fluorocarbon (FMK), and Nitrilebutadiene (NBR) O-rings for the SSW Tank Spud Seal meet 3-A Hygienic Standard Number 18 Class 1 requirements. The EPDM O-ring also meets USP Class VI approval requirements.

The EPDM, and Fluorocarbon (FMK) O-rings for the EES Flanged Tank Spud Extended Seal meet 3-A Hygienic Standard Number 18 Class 1 requirements. The EPDM O-ring also meets USP Class VI approval and FDA 21 CFR 177.2600 requirements.

Transmissible Spongiform Encephalopathy (TSE) Declaration

Emerson certifies no process wetted components used in hygienic seal products contain substances of animal origin. Materials used in the production or processing of wetted components for hygienic seals meet the requirements stated in EMA/410/01 Rev. 3 and ISO 22442-1:2015. Wetted components in hygienic seals are considered free of TSE.

Surface finish certification (Q16 option)

When ordering the Q16 option in the pressure transmitter model number, the surface finish of the seal diaphragm is certified per BPE 2002 requirements. This surface finish certification is available for Tri Clamp, Tri Clamp Inline, Tank Spud, and Thin Wall Tank Spud seal types.

NACE Standard (Q15 or Q25 option)

NACE (National Association of Corrosion Engineers) standard MR0175/ISO 15156 defines metallic material requirements for resistance to sulfide stress cracking when applied on petroleum production, drilling, gathering and flow line equipment, and field processing facilities to be used in H2S bearing hydrocarbon service. MR0103 provides material requirements exclusive to sour petroleum refining environments. Compliance guidelines are intended to include “wetted” materials as recommended by both NACE standards. The option code T in several of the general purpose seal types limits the wetted material offering. Metallurgical requirements for alloys used are virtually identical for the two standards, but application conditions enforced are different and can limit material acceptance. Contact an Emerson representative to aid in selecting the proper materials to meet the NACE standard.

Material traceability (Q8 Option)

Material traceability is provided for the seal, upper housing, and if applicable, lower housing/flushing connection or diaphragm extension, upon selecting the option code Q8 in the pressure transmitter model number. Material traceability for the transmitter/seal system is provided per the DIN EN10204 3.1 standard, and is only available for general purpose seal types.

Performance specifications

For zero-based spans, reference conditions, silicone oil fill, glass-filled PTFE O-rings, SST materials, coplanar flange (Rosemount 3051SMV, 3051S_C) or ½–14 NPT (Rosemount 3051S_T) process connections, digital trim values set to equal range points.

Remote seal system performance calculation report (QZ Option)

Instrument Toolkit™ calculates the remote seal system performance and validates model number configuration.

When the QZ option code is specified within the pressure transmitter model structure, Emerson will generate a remote seal system calculation report for the given application. This report quantifies all aspects of remote seal system performance including seal temperature effects, head temperature effects, seal response time, and transmitter total probable error.

Physical specifications

Material selection

Emerson provides a variety of Rosemount products with various product options and configurations, including materials of construction that can be expected to perform well in a wide range of applications. The Rosemount product information presented is intended as a guide for the purchaser to make an appropriate selection for the application. It is the purchaser's sole responsibility to make a careful analysis of all process parameters (such as all chemical components, temperature, pressure, flow rate, abrasives, contaminants, etc.), when specifying product, materials, options, and components for the particular application. Emerson is not in a position to evaluate or guarantee the compatibility of the process fluid or other process parameters with the product, options, configuration, or materials of construction selected.

Wetted materials

Seal	Gaskets
Flushed flanged	Klinger C-4401 gasket
Extended flanged	No gasket is supplied
Flushed flanged with RTJ gasket surface	No gasket is supplied
Flush flanged–EN and GOST standard	No gasket is supplied
FVW	No gasket is supplied
Remote flanged–RTJ gasket surface	Klinger C-4401 gasket
Remote flanged	Klinger C-4401 gasket
Remote threaded	Klinger C-4401 gasket
Flanged–pancake	Klinger C-4401 gasket
Flanged–pancake for RTJ gasket surface	No gasket is supplied
SSW	Ethylene propylene O-ring
STW	Ethylene propylene O-ring
UCW	PTFE O-ring
UCP	Barium-sulfate filled PTFE O-ring
WSP	Klinger C-4401 gasket
WBW	Klinger C-4401 gasket
WFW	Klinger C-4401 gasket
WTW	Klinger C-4401 gasket
WWW	Klinger C-4401 gasket

Tagging

The Rosemount remote seal model number is marked on the transmitter nameplate (neck or top label). The pressure transmitter will be tagged in accordance with customer requirements. The standard stainless steel tag is wired to the transmitter. Tag is 0.02-in. (0.051 cm) thick with 0.125-in. (0.318 cm) high letters. A permanently attached tag is available upon request.

Calibration

Transmitters are factory calibrated to customer’s specified range. If calibration is not specified, then the transmitters are calibrated at maximum range. Calibration is performed at ambient temperature and pressure.

Product certifications

Rosemount 3051S/3051SFx/3051S-ERS

Rev 3.11

European Directive Information

A copy of the EU Declaration of Conformity can be found at the end of the Quick Start Guide. The most recent revision of the EU Declaration of Conformity can be found at Emerson.com/Rosemount.

Ordinary Location Certification

As standard, the transmitter has been examined and tested to determine that the design meets the basic electrical, mechanical, and fire protection requirements by a nationally recognized test laboratory (NRTL) as accredited by the Federal Occupational Safety and Health Administration (OSHA).

Installing Equipment in North America

The US National Electrical Code® (NEC) and the Canadian Electrical Code (CEC) permit the use of Division marked equipment in Zones and Zone marked equipment in Divisions. The markings must be suitable for the area classification, gas, and temperature class. This information is clearly defined in the respective codes.

USA

E5 US Explosion-proof (XP) and Dust Ignition-proof (DIP)

Certificate FM16US0090

Standards FM Class 3600 – 2018, FM Class 3615 – 2018, FM Class 3616 – 2011, FM Class 3810 – 2018, ANSI/NEMA 250 – 2003

Markings XP CL I, DIV 1, GP B, C, D; DIP CL II, DIV 1, GP E, F, G; CL III; T5(–50 °C ≤ T_a ≤ +85 °C); Factory Sealed; Type 4X

I5 US Intrinsic Safety (IS) and Nonincendive (NI)

Certificate FM16US0089X

Standards FM Class 3600:2018, FM Class 3610:2010, FM Class 3611:2004, FM Class 3616:2011, FM Class 3810:2018, ANSI/ISA-60079-0:2013, ANSI/ISA-60079-11:2013, ANSI/ISA-61010-1:2004, NEMA 250:1991 (3051SFA only) or NEMA 250:2003

Markings IS CL I, DIV 1, GP A, B, C, D; CL II, DIV 1, GP E, F, G; Class III; Class 1, Zone 0 AEx ia IIC T4; NI CL 1, DIV 2, GP A, B, C, D;
T4 (–50 °C ≤ T_a ≤ +70 °C) [HART];
T4 (–50 °C ≤ T_a ≤ +60 °C) [Fieldbus];
when connected per Rosemount drawing 03151-1006; Type 4X

Special Condition for Safe Use (X):

The Model 3051S/3051S-ERS Pressure Transmitter contains aluminum and is considered to constitute a potential risk of ignition by impact or friction. Care must be taken into account during installation and use to prevent impact and friction.

Note
Transmitters marked with NI CL 1, DIV 2 can be installed in Division 2 locations using general Division 2 wiring methods or Nonincendive Field Wiring (NIFW). See Drawing 03151-1006.

US Intrinsic Safety (IS) and Nonincendive (NI)

Certificate 1143113

Standards FM Class 3600:2011, FM Class 3610:2010, FM Class 3611:2004, FM Class 3810:2005, UL50E (1st Ed.)

Markings IS Class I/II/III, Division 1, Groups A, B, C, D, T4/ E, F, and G T135 °C; Class I, Zone 0 AEx ia IIC T4 Ga; T4 (-50 °C ≤ T_a ≤ +70 °C) [HART];
T4 (-50 °C ≤ T_a ≤ +60 °C) [Fieldbus];
when connected per Rosemount drawing 03151-1016; Type 4X

IE US FISCO

Certificate FM16US0089X

Standards FM Class 3600 – 2011, FM Class 3610 – 2010, FM Class 3611 – 2004, FM Class 3810 – 2005, NEMA 250 – 2003

Markings IS CL I, DIV 1, GP A, B, C, D; T4 (–50 °C ≤ T_a ≤ +60 °C); when connected per Rosemount drawing 03151-1006; Type 4X

Special Condition for Safe Use (X):

The Model 3051S/3051S-ERS Pressure Transmitter contains aluminum and is considered to constitute a potential risk of ignition by impact or friction. Care must be taken into account during installation and use to prevent impact and friction.

US FISCO

Certificate 1143113

Standards FM Class 3600:2011, FM Class 3610:2010, FM Class 3611:2004, FM Class 3810:2005, UL50E (1st Ed.)

Markings IS Class I/II/III, Division 1, Groups A, B, C, D, T4/ E, F, and G T135 °C; Class I, Zone 0 AEx ia IIC T4 Ga; T4 (–50 °C ≤ T_a ≤ +70 °C) [HART];
T4 (–50 °C ≤ T_a ≤ +60 °C) [Fieldbus];
when connected per Rosemount drawing 03151-1016; Type 4X

Canada

E6 Canada Explosion-proof, Dust Ignition-proof, and Division 2

Certificate 1143113

Standards CAN/CSA C22.2 No. 0-10, CSA Std C22.2 No. 25-1966, CSA Std C22.2 No. 30-M1986, CAN/CSA C22.2 No. 94-M91, CSA Std C22.2 No. 142-M1987, CSA Std C22.2 No. 213-M1987, ANSI/ISA 12.27.01-2003, CSA Std C22.2 No. 60529:05

Markings Explosion-proof Class I, Division 1, Groups B, C, D; Dust-Ignitionproof Class II, Division 1, Groups E, F, G; Class III; suitable for Class I, Zone 1, Group IIB+H2, T5; suitable for Class I, Division 2, Groups A, B, C, D; suitable for Class I, Zone 2, Group IIC, T5; when connected per Rosemount drawing 03151-1013; Type 4X

I6 Canada Intrinsically Safe

Certificate 1143113

Standards CAN/CSA C22.2 No. 0-10, CSA Std C22.2 No. 30-M1986, CAN/CSA C22.2 No. 94-M91, CSA Std C22.2 No. 142-M1987, CSA Std C22.2 No. 157-92, ANSI/ISA 12.27.01-2003, CSA Std C22.2 No. 60529:05

Markings Intrinsically Safe Class I, Division 1; Groups A, B, C, D; suitable for Class 1, Zone 0, IIC, T3C; when connected per Rosemount drawing 03151-1016 [3051S] 03151-1313 [ERS]; Type 4X

IF Canada FISCO

Certificate 1143113

Standards CAN/CSA C22.2 No. 0-10, CSA Std C22.2 No. 30-M1986, CAN/CSA C22.2 No. 94-M91, CSA Std C22.2 No. 142-M1987, CSA Std C22.2 No. 157-92, ANSI/ISA 12.27.01-2003, CSA Std C22.2 No. 60529:05

Markings FISCO Intrinsically Safe Class I, Division 1; Groups A, B, C, D; suitable for Class 1, Zone 0, IIC, T3C; when connected per Rosemount drawing 03151-1016 [3051S] 03151-1313 [ERS]; Type 4X

Europe

E1 ATEX/UKEX Flameproof

ATEX Certificate KEMA 00ATEX2143X

UKEX Certificate DEKRA 21UKEX0293X

Standards EN IEC 60079-0:2018, EN 60079-1:2014, EN 60079-26:2015

Markings II ½ G Ex db IIC T6...T4 Ga/Gb, T6 (–60 °C ≤ T_a ≤ +70 °C), T5/T4 (–60 °C ≤ T_a ≤ +80 °C)

Table 31: Process Temperature

Temperature class	Process temperature
T6	–60 °C to +70 °C
T5	–60 °C to +80 °C
T4	–60 °C to +120 °C

Special Conditions for Safe Use (X):

1. This device contains a thin wall diaphragm less than 1 mm thickness that forms a boundary between Category 1 (process connection) and Category 2 (all other parts of the equipment). The model code and datasheet are to be consulted for details of the diaphragm material. Installation, maintenance and use shall take into account the environmental conditions to which the diaphragm will be subjected. The manufacturer's instructions for installation and maintenance shall be followed in detail to assure safety during its expected lifetime.
2. Flameproof joints are not intended for repair.
3. Non-standard paint options may cause risk from electrostatic discharge. Avoid installations that could cause electrostatic build-up on painted surfaces, and only clean the painted surfaces with a damp cloth. If paint is ordered through a special option code, contact the manufacturer for more information.
4. Appropriate cable, glands and plugs need to be suitable for a temperature of 5 °C greater than maximum specified temperature for location where installed.

I1 ATEX Intrinsic Safety

Certificate BAS01ATEX1303X

Standards EN IEC 60079-0: 2018, EN 60079-11: 2012

Markings II 1 G Ex ia IIC T4 Ga, T4 (–60 °C ≤ T_a ≤ +70 °C)

Table 32: Input Parameters

	U_i	I_i	P_i	C_i	L_i
SuperModule	30 V	300 mA	1.0 W	30 nF	0
3051S...A; 3051SF...A; 3051SAL...C	30 V	300 mA	1.0 W	12 nF	0
3051S...F; 3051SF...F	30 V	300 mA	1.3 W	0	0
3051S ...A...M7, M8, or M9; 3051SF ... A...M7, M8, or M9; 3051SAL...C... M7, M8, or M9	30 V	300 mA	1.0 W	12 nF	60 µH
3051SAL or 3051SAM	30 V	300 mA	1.0 W	12 nF	33 µH
3051SAL...M7, M8, or M9 3051SAM... M7, M8, or M9	30 V	300 mA	1.0 W	12 nF	93 µH

Table 32: Input Parameters *(continued)*

	U_i	I_i	P_i	C_i	L_i
RTD Option for 3051SF	5 V	500 mA	0.63 W	N/A	N/A

Special Conditions for Safe Use (X):

1. The Model 3051S Transmitters fitted with transient protection are not capable of withstanding the 500V test as defined in Clause 6.3.13 of EN 60079-11:2012. This must be taken into account during installation.
2. The terminal pins of the Model 3051S SuperModule must be provided with a degree of protection of at least IP20 in accordance with IEC/EN 60529.
3. The Model 3051S enclosure may be made of aluminum alloy and given a protective polyurethane paint finish; however, care should be taken to protect it from impact or abrasion if located in a zone 0 area.

IA ATEX FISCO

Certificate	BAS01ATEX1303X
Standards	EN IEC 60079-0: 2018, EN 60079-11: 2012
Markings	Ex II 1 G Ex ia IIC T4 Ga, T4 (–60 °C ≤ T_a ≤ +70 °C)

Table 33: Input Parameters

Parameter	FISCO
Voltage U_i	17.5 V
Current I_i	380 mA
Power P_i	5.32 W
Capacitance C_i	0
Inductance L_i	0

Special Conditions for Safe Use (X):

1. The Model 3051S Transmitters fitted with transient protection are not capable of withstanding the 500 V test as defined in Clause 6.3.13 of EN 60079-11:2012. This must be taken into account during installation.
2. The terminal pins of the Model 3051S SuperModule must be provided with a degree of protection of at least IP20 in accordance with IEC/EN 60529.
3. The Model 3051S enclosure may be made of aluminum alloy and given a protective polyurethane paint finish; however, care should be taken to protect it from impact or abrasion if located in a zone 0 area.

ND ATEX Dust

Certificate	BAS01ATEX1374X
Standards	EN 60079-0: 2012+A11:2013, EN 60079-31: 2009
Markings	Ex II 1 D Ex ta IIIC T105 °C T_{500} 95 °C Da, (–20 °C ≤ T_a ≤ +85 °C), V_{max} = 42.4 V

Special Conditions for Safe Use (X):

1. Cable entries must be used which maintain the ingress protection of the enclosure to at least IP66.
2. Unused cable entries must be filled with suitable blanking plugs which maintain the ingress protection of the enclosure to at least IP66.
3. Cable entries and blanking plugs must be suitable for the ambient temperature range of the apparatus and capable of withstanding a 7 J impact test.
4. The SuperModule(s) must be securely screwed in place to maintain the ingress protection of the enclosure(s).

N1 ATEX Type n

Certificate	BAS01ATEX3304X
Standards	EN IEC 60079-0: 2018, EN 60079-15: 2010
Markings	Ⓔx II 3 G Ex nA IIC T5 Gc, (–40 °C ≤ T_a ≤ +85 °C), V_{max} = 45 V

Special Condition for Safe Use (X):

The equipment is not capable of withstanding the 500V insulation test required by clause 6.5 of EN 60079-15:2010. This must be taken into account when installing the equipment.

Note
RTD Assembly is not included with the 3051SFx Type n Approval.

International

E7 IECEx Flameproof and Dust

Certificate	IECEx KEM 08.0010X (Flameproof)
Standards	IEC 60079-0:2017, IEC 60079-1:2014, IEC 60079-26:2014
Markings	Ex db IIC T6...T4 Ga/Gb, T6 (–60 °C ≤ T_a ≤ +70 °C), T5/T4 (–60 °C ≤ T_a ≤ +80 °C)

Table 34: Process Temperature

Temperature class	Process temperature
T6	–60 °C to +70 °C
T5	–60 °C to +80 °C
T4	–60 °C to +120 °C

Special Conditions for Safe Use (X):

1. This device contains a thin wall diaphragm less than 1 mm thickness that forms a boundary between EPL Ga (process connection) and EPL Gb (all other parts of the equipment). The model code and datasheet are to be consulted for details of the diaphragm material. Installation, maintenance and use shall take into account the environmental conditions to which the diaphragm will be subjected. The manufacturer's instructions for installation and maintenance shall be followed in detail to assure safety during its expected lifetime.
2. Flameproof joints are not intended for repair.
3. Non-standard paint options may cause risk from electrostatic discharge. Avoid installations that could cause electrostatic build-up on painted surfaces, and only clean the painted surfaces with a damp cloth. If paint is ordered through a special option code, contact the manufacturer for more information.
4. Appropriate cable, glands and plugs need to be suitable for a temperature of 5 °C greater than maximum specified temperature for location where installed.

Certificate	IECEx BAS 09.0014X (Dust)
Standards	IEC 60079-0:2011, IEC 60079-31:2008
Markings	Ex ta IIIC T105 °C T50095 °C Da, (–20 °C ≤ T_a ≤ +85 °C), V_{max} = 42.4 V

Special Conditions for Safe Use (X):

1. Cable entries must be used which maintain the ingress protection of the enclosure to at least IP66.
2. Unused cable entries must be filled with suitable blanking plugs which maintain the ingress protection of the enclosure to at least IP66.

3. Cable entries and blanking plugs must be suitable for the ambient temperature range of the apparatus and capable of withstanding a 7 J impact test.
4. The 3051S SuperModule must be securely screwed in place to maintain the ingress protection of the enclosure.

I7 IECEx Intrinsic Safety

Certificate	IECEx BAS 04.0017X
Standards	IEC 60079-0: 2017, IEC 60079-11: 2011
Markings	Ex ia IIC T4 Ga, T4 (–60 °C ≤ T_a ≤ +70 °C)

Table 35: Input Parameters

	U_i	I_i	P_i	C_i	L_i
SuperModule	30 V	300 mA	1.0 W	30 nF	0
3051S...A; 3051SF...A; 3051SAL...C	30 V	300 mA	1.0 W	12 nF	0
3051S...F; 3051SF...F	30 V	300 mA	1.3 W	0	0
3051S ...A...M7, M8, or M9; 3051SF ... A...M7, M8, or M9; 3051SAL...C... M7, M8, or M9	30 V	300 mA	1.0 W	12 nF	60 µH
3051SAL or 3051SAM	30 V	300 mA	1.0 W	12 nF	33 µH
3051SAL...M7, M8, or M9 3051SAM... M7, M8, or M9	30 V	300 mA	1.0 W	12 nF	93 µH
RTD Option for 3051SF	5 V	500 mA	0.63 W	N/A	N/A

Special Conditions for Safe Use (X):

1. The Model 3051S Transmitters fitted with transient protection are not capable of withstanding the 500 V test as defined in Clause 6.3.13 of EN 60079-11:2012. This must be taken into account during installation.
2. The terminal pins of the Model 3051S SuperModule must be provided with a degree of protection of at least IP20 in accordance with IEC/EN 60529.
3. The Model 3051S enclosure may be made of aluminum alloy and given a protective polyurethane paint finish; however, care should be taken to protect it from impact or abrasion if located in a zone 0 area.

I7 IECEx Intrinsic Safety - Group I - Mining (I7 with Special A0259)

Certificate	IECEx TSA 14.0019X
Standards	IEC 60079-0: 2011, IEC 60079-11: 2011
Markings	Ex ia I Ma (–60 °C ≤ T_a ≤ +70 °C)

Table 36: Input Parameters

	U_i	I_i	P_i	C_i	L_i
SuperModule	30 V	300 mA	1.0 W	30 nF	0
3051S...A; 3051SF...A; 3051SAL...C	30 V	300 mA	1.0 W	12 nF	0
3051S...F; 3051SF...F	30 V	300 mA	1.3 W	0	0
3051S ...A...M7, M8, or M9; 3051SF ... A...M7, M8, or M9; 3051SAL...C... M7, M8, or M9	30 V	300 mA	1.0 W	12 nF	60 µH
3051SAL or 3051SAM	30 V	300 mA	1.0 W	12 nF	33 µH
3051SAL...M7, M8, or M9 3051SAM... M7, M8, or M9	30 V	300 mA	1.0 W	12 nF	93 µH

Table 36: Input Parameters *(continued)*

	U_i	I_i	P_i	C_i	L_i
RTD Option for 3051SF	5 V	500 mA	0.63 W	N/A	N/A

Special Conditions for Safe Use (X):

1. If the apparatus is fitted with optional 90 V transient suppressor, it is not capable of withstanding the 500 V insulation test required by Clause 6.3.13 of IEC60079-11. This must be taken into account when installing the apparatus.
2. It is a condition of safe use that the above input parameters shall be taken into account during installation.
3. It is a condition of manufacture that only the apparatus fitted with housing, covers and sensor module housing made out of stainless steel are used in Group I applications.

IG IECEx FISCO

Certificate	IECEx BAS 04.0017X
Standards	IEC 60079-0: 2017, IEC 60079-11: 2011
Markings	Ex ia IIC T4 Ga, T4(–60 °C ≤ T_a ≤ +70 °C)

Table 37: Input Parameters

Parameter	FISCO
Voltage U_i	17.5 V
Current I_i	380 mA
Power P_i	5.32 W
Capacitance C_i	0
Inductance L_i	0

Special Conditions for Safe Use (X):

1. The Model 3051S Transmitters fitted with transient protection are not capable of withstanding the 500 V test as defined in Clause 6.3.13 of EN 60079-11:2012. This must be taken into account during installation.
2. The terminal pins of the Model 3051S SuperModule must be provided with a degree of protection of at least IP20 in accordance with IEC/EN 60529.
3. The Model 3051S enclosure may be made of aluminum alloy and given a protective polyurethane paint finish; however, care should be taken to protect it from impact or abrasion if located in a zone 0 area.

IG IECEx Intrinsic Safety - Group I - Mining (IG with Special A0259)

Certificate	IECEx TSA 14.0019X
Standards	IEC 60079-0: 2011, IEC 60079-11: 2011
Markings	FISCO FIELD DEVICE Ex ia I Ma, (–60 °C ≤ T_a ≤ +70 °C)

Table 38: Input Parameters

Parameter	FISCO
Voltage U_i	17.5 V
Current I_i	380 mA
Power P_i	5.32 W
Capacitance C_i	0

Table 38: Input Parameters
(continued)

Inductance L_i	0

Special Conditions for Safe Use (X):

1. If the apparatus is fitted with optional 90 V transient suppressor, it is not capable of withstanding the 500 V insulation test required by Clause 6.3.13 of IEC60079-11. This must be taken into account when installing the apparatus.
2. It is a condition of safe use that the above input parameters shall be taken into account during installation.
3. It is a condition of manufacture that only the apparatus fitted with housing, covers and sensor module housing made out of stainless steel are used in Group I applications.

N7 IECEx Type n

Certificate IECEx BAS 04.0018X

Standards IEC 60079-0: 2017, IEC 60079-15: 2010

Markings Ex nA IIC T5 Gc, (–40 °C ≤ T_a ≤ +85 °C)

Special Condition for Safe Use (X):

The equipment is not capable of withstanding the 500 V insulation test required by clause 6.5 of EN 60079-15:2010. This must be taken into account when installing the equipment.

Brazil

E2 Brazil Flameproof

Certificate UL-BR 15.0393X

Standards ABNT NBR IEC 60079-0:2013, ABNT NBR IEC 60079-1:2016, ABNT NBR IEC 60079-26:2016

Markings Ex db IIC T6...T4 Ga/Gb, T6 (–60 °C ≤ T_a ≤ +70 °C), T5/T4 (–60 °C ≤ T_a ≤ +80 °C), IP66

Temperature Class	Ambient Temperature	Process Connection Temperature
T6	-60°C to +70°C	-60°C to +70°C
T5	-60°C to +80°C	-60°C to +80°C
T4	-60°C to +80°C	-60°C to +120°C

Special Conditions for Safe Use (X):

1. The device contains a thin wall diaphragm less than 1mm thick that forms a boundary between EPL Ga (process connection) and EPL Gb (all other parts of the equipment). The model code and datasheet are to be consulted for details of the diaphragm material. Installation, maintenance, and use shall take into account the environmental conditions to which the diaphragm will be subjected. The manufacturer's instructions for maintenance shall be followed in detail to assure safety during its expected lifetime.
2. Flameproof joints are not intended for repair.
3. Non-standard paint options may cause risk from electrostatic discharge. Avoid installations that could cause electrostatic build-up on painted surfaces, and only clean the painted surfaces with a damp cloth. If paint is ordered through a special option code, contact the manufacturer for more information.

I2/IB Brazil Intrinsic Safety/FISCO

Certificate UL-BR 15.0392X

Standards ABNT NBR IEC 60079-0:2013, ABNT NBR IEC 60079-11:2013

Markings Ex ia IIC T4 Ga (–60 °C ≤ T_a ≤ +70 °C), IP66

Special Conditions for Safe Use (X):

1. The surface resistivity of the antenna is greater than 1 GΩ. To avoid electrostatic charge build-up, it must not be rubbed or cleaned with solvents or a dry cloth.
2. The Model 701PBKKF Power Module may be replaced in a hazardous area. The Power Module has a surface resistivity greater than 1 GΩ and must be properly installed in the wireless device enclosure. Care must be taken during transportation to and from the point of installation to prevent electrostatic charge build-up.
3. The 3051S enclosure may be made of aluminium alloy and given a protective polyurethane paint finish; however, care should be taken to protect it from impact or abrasion if located in areas that requires EPL Ga.

Table 39: Input Parameters

	U_i	I_i	P_i	C_i	L_i
SuperModule	30 V	300 mA	1.0 W	30 nF	0
3051S...A; 3051SF...A; 3051SAL...C	30 V	300 mA	1.0 W	12 nF	0
3051S...F; 3051SF...F	30 V	300 mA	1.3 W	0	0
3051S...F...IB; 3051SF...F...IB	17.5 V	380 mA	5.32 W	0	0
3051S ...A...M7, M8, or M9; 3051SF ... A...M7, M8, or M9; 3051SAL...C... M7, M8, or M9	30 V	300 mA	1.0 W	12 nF	60 µH
3051SAL or 3051SAM	30 V	300 mA	1.0 W	12 nF	33 µH
3051SAL... M7, M8, or M9 3051SAM... M7, M8, or M9	30 V	300 mA	1.0 W	12 nF	93 µH
RTD Option for 3051SF	5 V	500 mA	0.63 W	N/A	N/A

China

E3 China Flameproof and Dust Ignition-proof

Certificate 3051S: GYJ21.1120X
3051SFx: GYJ21.3300X
3051S-ERS: GYJ20.1489X

Standards 3051S: GB3836.1-2010, GB3836.2-2010, GB3836.20-2010, GB12476.1-2013, GB12476.5-2013
3051SFx: GB3836.1-2010, GB3836.2-2010, GB12476.1-2013, GB 12476.5-2013
3051S-ERS: GB3836.1-2010, GB3836.2-2010, GB3836.20-2010

Markings 3051S: Ex d IIC T6...T4; Ex tD A20 T105 °C T_{500} 95 °C; IP66
3051SFx: Ex d IIC T4~T6 Ga/Gb; Ex tD A20 IP66 T105 °C T_{500} 95 °C; IP66
3051S-ERS: Ex d IIC T4~T6 Ga/Gb

产品安全使用特殊条件

- 证书编号后缀 “X” 表明产品具有安全使用特殊条件: 涉及隔爆接合面的维修须联系产品制造商.
- 产品使用注意事项
  1. 用于爆炸性气体环境中, 产品使用环境温度与温度组别和介质温度的关系为:

温度组别	环境温度	过程温度
T6	–60 °C ≤ Ta ≤ +70 °C	–60 °C ≤ Ta ≤ +70 °C

温度组别	环境温度	过程温度
T5	–60 °C ≤ Ta ≤ +80 °C	–60 °C ≤ Ta ≤ +80 °C
T4	–60 °C ≤ Ta ≤ +80 °C	–60 °C ≤ Ta ≤ +120 °C

2. 用于爆炸性粉尘环境中, 产品使用环境温度为: –20 °C ≤ Ta ≤ +85 °C.
3. 产品外壳设有接地端子, 用户在使用时应可靠接地.
4. 安装现场应不存在对产品外壳有腐蚀作用的有害气体.
5. 现场安装时, 电缆引入口须选用国家指定的防爆检验机构按检验认可, 具有 Ex dIIC, Ex tD A20 IP66 防爆等级的电缆引入装置或堵封件, 冗余电缆引入口须用堵封件有效密封.
6. 用于爆炸性气体环境中, 现场安装, 使用和维护必须严格遵守 “断电后开盖!” 的警告语. 用于爆炸性粉尘环境中, 现场安装, 使用和维护必须严格遵守 “爆炸性粉尘场所严禁开盖!” 的警告语.
7. 用于爆炸性粉尘环境中, 产品外壳表面需保持清洁, 以防粉尘堆积, 但严禁用压缩空气吹扫.
8. 用户不得自行更换该产品的零部件, 应会同产品制造商共同解决运行中出现的故障, 以杜绝损坏现象的发生.
9. 产品的安装, 使用和维护应同时遵守产品使用说明书, GB3836.13-2013 “爆炸性环境 第 13 部分: 设备的修理, 检修, 修复和改造”, GB3836.15-2000 “爆炸性气体环境用电气设备 第 15 部分: 危险场所电气安装（煤矿除外）”, GB3836.16-2006 “爆炸性气体环境用电气设备 第 16 部分: 电气装置的检查和维护（煤矿除外）”, GB50257-2014 “电气装置安装工程爆炸和火灾危险环境电力装置施工及验收规范” 和 GB15577-2007 “粉尘防爆安全规程”, GB12476.2-2010 “可燃性粉尘环境用电气设备 第 2 部分: 选型和安装”的有关规定.

I3 China Intrinsic Safety

Certificate	3051S: GYJ21.1121X [Mfg USA, China, Singapore] 3051SFx: GYJ21.3301X [Mfg USA, China, Singapore] 3051S-ERS: GYJ21.1122X [Mfg USA, China, Singapore]
Standards	3051S: GB3836.1-2010, GB3836.4-2010, GB3836.20-2010 3051SFx: GB3836.1-2010, GB3836.4-2010, GB3836.20-2010 3051S-ERS: GB3836.1-2010, GB3836.4-2010, GB3836.20-2010
Markings	3051S: Ex ia IIC T4 Ga 3051SFx: Ex ia IIC T4 Ga 3051S-ERS: Ex ia IIC T4 Ga

产品安全使用特殊条件**:**

- 证书编号后缀 “X” 表明产品具有安全使用特殊条件:
  1. 产品外壳含有轻金属, 用于 0 区时需注意防止由于冲击或摩擦产生的点燃危险.
  2. 当选择 T1 瞬态抑制端子时, 此设备不能承受 GB3836.4-2010 标准中第 6.3.12 条规定的 500 V 交流有效值试验电压的介电强度试验.
  3. Transmitter output 为 X 时, 天线表面电阻大于 1 GΩ, 为了避免静电积聚, 不允许用溶剂或者干布擦拭; 电源模块表面电阻大于 1 GΩ, 如果在危险区域更换, 则需要避免静电积聚; 只能使用由原制造厂提供的 P/N 753-9220-XXXX 电池.
- 产品使用注意事项:
  1. 产品使用环境温度为:
     用于爆炸性气体环境中, 产品使用环境温度为: – 60 °C ≤ Ta ≤ +70 °C
     用于爆炸性粉尘环境中, 产品使用环境温度为: – 20 °C ≤ Ta ≤ +85 °C
  2. 本安电气参数:

型号	端子	最高输入电压 **Ui**（**V**）	最大输入电流 **Ii**（**mA**）	最大输入功率 **Pi**（**W**）	最大内部等效参数	
					Ci（**nF**）	**Li**（**µH**）
3051SAL_C	+, -, CAN	30	300	1	12	0
3051SAL_C... M7/M8/M9	+, -	30	300	1	12	60
3051SAL, 3051SAM	+, -, CAN	30	300	1	12	33
3051SAL... M7/M8/M9 3051SAM... M7/M8/M9	+, -	30	300	1	12	93

变送器输出	端子	最高输入电压 **Ui**（**V**）	最大输入电流 **Ii**（**mA**）	最大输入功率 **Pi**（**W**）	最大内部等效参数	
					Ci（**nF**）	**Li**（**µH**）
Super module	+, -, CAN	30	300	1	30	0
A	+, -, CAN	30	300	1	12	0
A 配 M7, M8 或 M9 显示	+, -	30	300	1	12	60
F	+, -	30	300	1.3	0	0
FISCO	+, -	17.5	380	5.32	0	0
RTD 选项	-	5	500	0.63	-	-

注: 本安电气参数符合 GB3836.19-2010 对 FISCO 现场仪表的参数要求.

3. 选择 Remote Mount 选项 M7, M8, M9 时, 电缆分布电容小于 24nF, 分布电感小于 60µH.
4. 该产品必须与已通过防爆认证的关联设备配套共同组成本安防爆系统方可使用于爆炸性气体环境. 其系统接线必须同时遵守本产品和所配关联设备的使用说明书要求, 接线端子不得接错.
5. 用户不得自行更换该产品的零部件, 应会同产品制造商共同解决运行中出现的故障, 以杜绝损坏现象的发生.
6. 用于爆炸性粉尘环境中, 电缆引入口须选用国家指定的防爆检验机构按检验认可, 具有 Ex tD A20 IP66 防爆等级的电缆引入装置或堵封件, 冗余电缆引入口须用堵封件有效密封.
7. 产品的安装, 使用和维护应同时遵守产品使用说明书, GB3836.13-2013 “爆炸性环境 第 13 部分: 设备的修理, 检修, 修复和改造”, GB3836.15-2000 “爆炸性气体环境用电气设备 第 15 部分: 危险场所电气安装（煤矿除外）”, GB3836.16-2006 “爆炸性气体环境用电气设备 第 16 部分: 电气装置的检查和维护（煤矿除外）”, GB3836.18-2010 “爆炸性环境 第 18 部分: 本质安全系统” 和 GB50257-2014 “电气装置安装工程爆炸和火灾危险环境电力装置施工及验收规范” 和 GB15577-2007 “粉尘防爆安全规程”, GB12476.2-2010 “可燃性粉尘环境用电气设备第 2 部分”: 选型和安装的有关规定.

N3 China Type n

Certificate 3051S, 3051SHP: GYJ17.1354X
3051SFX: GYJ17.1355X

Markings Ex nA IIC T5 Gc

产品安全使用特殊条件

- 产品防爆合格证号后缀 “X” 代表产品安全使用有特殊条件: 产品选用瞬态保护端子板（c 中包含 T1 选项）时, 设备不能承受 500V 对地电压试验 1 分钟, 安装时需考虑在内.
- 产品使用注意事项
  1. 产品使用环境温度范围为: –40 °C ≤ T_a ≤ +85 °C.
  2. 最高输入电压: 45V.

3. 现场安装时, 电缆引入口须选用经国家指定的防爆检验机构检验认可的, 具有 Ex eIIC Gb 或 Ex nA IIC Gc 防爆等级的电缆引入装置或堵封件, 冗余电缆引入口须用堵封件有效密封.
4. 安装现场确认无可燃性气体存在时方可维修.
5. 用户不得自行更换该产品的零部件, 应会同产品制造商共同解决运行中出现的故障, 以杜绝损坏现象的发生.
6. 产品的安装, 使用和维护应同时遵守产品使用说明书, GB3836.13-2013 “爆炸性环境 第 13 部分: 设备的修理, 检修, 修复和改造”, GB3836.15-2000 “爆炸性气体环境用电气设备 第 15 部分: 危险场所电气安装（煤矿除外）”, GB3836.16-2006 “爆炸性气体环境用电气设备 第 16 部分: 电气装置的检查和维护（煤矿除外）” , GB50257-2014 “电气装置安装工程爆炸和火灾危险环境电力装置施工及验收规范” 的有关规定.

Technical Regulation Custom Union (EAC)

EM EAC Flameproof and Dust Ignition-proof

Certificate EAЭC RU C-US.AA87.B.00587/20

Markings Ga/Gb Ex d IIC T6...T4 X
Ex tb IIIC T105 °C T_{500} 95 °C Db X
Ex ta IIIC T105 °C T_{500} 95 °C Da X

IM EAC Intrinsic Safety

Certificate EAЭC RU C-US.AA87.B.00587/20

Markings 0Ex ia IIC T4 Ga X

IN EAC Intrinsic Safety

Certificate: EAЭC RU C-US.AA87.B.00587/20

Markings: 0Ex ia IIC T4 Ga X

Japan

E4 Japan Flameproof

Certificate CML 17JPN1147X

Markings Ex db IIC T6...T4 Ga/Gb

Temperature class	Ambient temperature	Process temperature
T6	–60 to +70 °C	–60 to +70 °C
T5	–60 to +80 °C	–60 to +80 °C
T4	–60 to +80 °C	–60 to +120 °C

Special Conditions for Safe Use:

1. This device contains a thin wall diaphragm less than 1mm thickness that forms a boundary between EPL Ga (process connection) and EPL Gb (all other parts of the equipment). The model code and datasheet are to be consulted for details of the diaphragm material. Installation, maintenance, and use shall consider the environmental conditions to which the diaphragm will be subjected. The manufacturer’s instructions for installation and maintenance shall be followed in detail to assure safety during its expected lifetime.
2. Flameproof joints are not intended for repair.
3. Non-standard paint options may cause risk from electrostatic discharge. Avoid installations that could cause electrostatic build-up on painted surfaces, and only clean the painted surfaces with a damp cloth. If paint is ordered through a special option code, contact the manufacturer for more information.

Republic of Korea

EP Republic of Korea Flameproof

Certificate 19-KA4BO-0913X [Mfg USA], 12-KB4BO-0180X [Mfg USA], 11-KB4BO-0068X [Mfg Singapore]

Markings Ex d IIC T6...T4 Ga/Gb

IP Republic of Korea Intrinsic Safety

Certificate 12-KB4BO-0202X [HART – Mfg USA], 12-KB4BO-0204X [Fieldbus – Mfg USA], 19-KA4BO-0844X [HART – Mfg USA], 19-KA4BO-0845X [Fieldbus – Mfg USA], 12-KB4BO-0203X [HART – Mfg Singapore], 13-KB4BO-0296X [Fieldbus – Mfg Singapore], 19-KA4BO-0845X [Fieldbus- Mfg USA], 19-KA4BO-0844X [HART- Mfg USA]

Markings Ex ia IIC T4

Combinations

K1 Combination of E1, I1, N1, and ND

K2 Combination of E2 and I2

K5 Combination of E5 and I5

K6 Combination of E6 and I6

K7 Combination of E7, I7, and N7

KA Combination of E1, I1, E6, and I6

KB Combination of E5, I5, E6, and I6

KC Combination of E1, I1, E5, and I5

KD Combination of E1, I1, E5, I5, E6, and I6

KG Combination of IA, IE, IF, and IG

KM Combination of EM and IM

KP Combination of EP and IP

Additional certifications

SBS American Bureau of Shipping (ABS) Type Approval

Certificate 17-RJ1679518-PDA

Intended Use Measure gauge or absolute pressure of liquid, gas or vapor applications on ABS classed vessels, marine, and offshore installations.

SBV Bureau Veritas (BV) Type Approval

Certificate 31910 BV

Requirements Bureau Veritas Rules for the Classification of Steel Ships

Application Class Notations: AUT-UMS, AUT-CCS, AUT-PORT and AUT-IMS.

SDN Det Norske Veritas (DNV) Type Approval

Certificate TAA00000K9

Intended Use Det Norske Veritas' Rules for Classification of Ships, High Speed & Light Craft, and Det Norske Veritas' Offshore Standards

Application

Location classes	
Type	3051S
Temperature	D
Humidity	B
Vibration	A
EMC	A
Enclosure	D/IP66/IP68

SLL Lloyds Register (LR) Type Approval

Certificate LR21173788TA

Application Environmental categories ENV1, ENV2, ENV3, and ENV5

D3 Custody Transfer - Measurement Canada Accuracy Approval [3051S Only]

Certificate AG-0501, AV-2380C

Rosemount 3051S and 3051SMV Wireless

Rev 2.10

European directive information

A copy of the EC Declaration of Conformity can be found at the end of the Quick Start Guide. The most recent revision of the EC Declaration of Conformity can be found at Emerson.com/Rosemount.

Telecommunication Compliance

All wireless devices require certification to ensure that they adhere to regulations regarding the use of the RF spectrum. Nearly every country requires this type of product certification.

Emerson is working with governmental agencies around the world to supply fully compliant products and remove the risk of violating country directives or laws governing wireless device usage.

FCC and IC

This device complies with Part 15 of the FCC Rules. Operation is subject to the following conditions: This device may not cause harmful interference. This device must accept any interference received, including interference that may cause undesired operation. This device must be installed to ensure a minimum antenna separation distance of 20 cm from all persons.

Ordinary location certification

As standard, the transmitter has been examined and tested to determine that the design meets the basic electrical, mechanical, and fire protection requirements by a nationally recognized test laboratory (NRTL) as accredited by the Federal Occupational Safety and Health Administration (OSHA).

Installing Equipment in North America

The US National Electrical Code (NEC) and the Canadian Electrical Code (CEC) permit the use of Division marked equipment in Zones and Zone marked equipment in Divisions. The markings must be suitable for the area classification, gas, and temperature class. This information is clearly defined in the respective codes.

USA

I5 USA Intrinsically Safe (IS), Nonincendive (NI), and Dust-Ignitionproof (DIP)

Certificate	FM18US0009X
Standards	FM Class 3600 – 2011, FM Class 3610 – 2010, FM Class 3611 – 2004, FM Class 3810 – 2005, NEMA 250 – 2003
Markings	IS CL I, DIV 1, GP A, B, C, D; CL II, DIV 1, GP E, F, G; CL III T4; CL 1, Zone 0 AEx ia IIC T4; NI CL 1, DIV 2, GP A, B, C, D T4; DIP CL II, DIV 1, GP E, F, G; CL III, T5; T4(–50 °C ≤ Ta ≤ +70 °C)/ T5(–50 °C ≤ T_a ≤ +85 °C); when connected per Rosemount drawing 03151-1000; Type 4X

Special Conditions for Safe Use (X):

1. The Rosemount 3051S and SMV Wireless Transmitters shall only be used with the 701PBKKF Rosemount SmartPower Battery Pack (P/N 00753-9220-0001), Computational Systems Inc Battery Pack (P/N MHM-89004) or alternatively the Perpetuum Intelligent Power Module Vibration Harvester (P/N IPM71008).
2. The transmitter may contain more than 10% aluminum and is considered a potential risk of ignition by impact or friction. Care must be taken into account during installation and use to prevent impact and friction.
3. The surface resistivity of the antenna is greater than 1GΩ. To avoid electrostatic charge build-up, it must not be rubbed or cleaned with solvents or a dry cloth.

Canada

I6 Canada Intrinsically Safe

Certificate	CSA 1143113
Standards	CAN/CSA C22.2 No. 0-10, CSA Std C22.2 No. 30-M1986, CAN/CSA C22.2 No. 94-M91, CSA Std C22.2 No. 142-M1987, CSA Std C22.2 No. 157-92, ANSI/ISA 12.27.01-2003, CSA Std C22.2 No. 60529:05
Markings	Intrinsically Safe Class I, Division 1; suitable for Class 1, Zone 0, IIC, T3C; when connected per Rosemount drawing 03151-1010; Type 4X

Europe

I1 ATEX Intrinsic Safety

Certificate	Baseefa13ATEX0127X
Standards	EN 60079-0: 2012, EN 60079-11: 2012
Markings	Ex II 1 G Ex ia IIC T4 Ga, T4(–60 °C ≤ T_a ≤ +70 °C)

Special Conditions for Safe Use (X):

1. The Rosemount 3051S Wireless and Rosemount 3051SMV Wireless enclosure may be made of aluminum alloy and given a protective polyurethane paint finish; however, care should be taken to protect it from impact or abrasion if located in a zone 0 area.
2. The surface resistivity of the antenna is greater than 1 GΩ. To avoid electrostatic charge build-up, it must not be rubbed or cleaned with solvents or dry cloth.

International

I7 IECEx Intrinsic Safety

Certificate	IECEx BAS 13.0068X
Standards	IEC 60079-0:2011, IEC 60079-11:2011
Markings	Ex ia IIC T4 Ga, T4(–60 °C ≤ T_a ≤ +70 °C)

Special Conditions for Safe Use (X):

1. The Rosemount 3051S Wireless and Rosemount 3051SMV Wireless enclosure may be made of aluminum alloy and given a protective polyurethane paint finish; however, care should be taken to protect it from impact or abrasion if located in a zone 0 area.
2. The surface resistivity of the antenna is greater than 1GΩ . To avoid electrostatic charge build-up, it must not be rubbed or cleaned with solvents or dry cloth.

Brazil

I2 Brazil Intrinsic Safety

Certificate	UL-BR 14.0760X
Standards	ABNT NBR IEC60079-0:2008 + Errata 1:2011, ABNT NBR IEC60079-11: 2009
Markings	Ex ia IIC T4 Ga, T4(–60 °C ≤ T_a ≤ +70 °C)

Special Condition for Safe Use (X):

See certificate.

China

I3 China Intrinsic Safety

Certificate	3051S Wireless: GYJ21.1121X 3051SFX: GYJ21.3301X [flow meters]
Standards	GB3836.1-2010, GB3836.4-2010, GB3836.20-2010
Markings	Ex ia IIC T4 Ga, T4(–60~70 °C)

Special Condition for Safe Use (X):

See appropriate certificate.

Note
Not currently available on the Rosemount 3051S MultiVariable Wireless Transmitter.

Japan

I4 CML Intrinsically Safe

Certificate	CML20JPN2011X
Markings	Ex ia IIC T4 Ga (-60 °C ≤ T_a ≤ +70 °C), Ex ia IIC T5 Ga (-60 °C ≤ T_a ≤ +40 °C)

EAC – Belarus, Kazakhstan, Russia

IM EAC Intrinsic Safety

Certificate	EAЭC RU C-US.AA87.B.00587-20
Markings	0Ex ia IIC T4 Ga X (–60 °C ≤ T_a ≤ +70 °C)

Special Condition for Safe Use (X):

See certificate for special conditions.

Republic of Korea

IP Republic of Korea Intrinsic Safety

Certificate	12-KB4BO-0202X, 12-KB4BO-0203X
Markings	Ex ia IIC T4, (-60 °C ≤ T_a ≤ +70 °C)

Special Condition for Safe Use (X):

See certificate for special conditions.

Note
Not currently available on the 3051S MultiVariable Wireless Transmitter.

Combinations

KQ	Combination of I1, I5, and I6

Rosemount 3051 product certifications

Rev 2.19

European directive information

A copy of the EU Declaration of Conformity can be found at the end of the Quick Start Guide. The most recent revision of the EU Declaration of Conformity can be found at Emerson.com/Rosemount.

Ordinary location certification

As standard, the transmitter has been examined and tested to determine that the design meets the basic electrical, mechanical, and fire protection requirements by a nationally recognized test laboratory (NRTL) as accredited by the Federal Occupational Safety and Health Administration (OSHA).

North America

E5 USA Explosionproof (XP) and Dust-Ignitionproof (DIP) Range 1-5 (HART)

Range 1-5 Certificate	FM16US0121
Standards	FM Class 3600 – 2018, FM Class 3615 – 2018, FM Class 3616 - 2011, FM Class 3810 – 2005, ANSI/NEMA 250 – 2008
Markings	XP CL I, DIV 1, GP B, C, D; DIP CL II, DIV 1, GP E, F, G; CL III; T5(–50 °C ≤ T_a ≤ +85 °C); Factory Sealed; Type 4X
Range 6 Certificate	1053834
Standards	ANSI/ISA 12.27.01-2003, CSA Std. C22.2 No. 30 -M1986, CSA Std. C22.2 No.142-M1987, CSA Std. C22.2 No. 213 - M1987
Markings	XP Class I, Division 1, Groups B, C and D, T5, (–50 °C ≤ Ta ≤ +85 °C) Suitable for Class I, Zone 1, Group IIB+H2, T5; DIP Class II and Class III, Division 1, Groups E, F and G, T5, (–50 °C ≤ Ta ≤ +85 °C); Type 4X; Factory Sealed; Single Seal (See drawing 03031-1053)

I5 FM Intrinsic Safety (IS) and Nonincendive (NI)

Range 1-5 Certificate	FM16US0120X
Standards	FM Class 3600 - 2011, FM Class 3610 - 2010, FM Class 3611 - 2004, FM Class 3810 - 2005, ANSI/NEMA 250 - 2008
Markings	IS CL I, DIV 1, GP A, B, C, D; CL II, DIV 1, GP E, F, G; Class III; DIV 1 when connected per Rosemount drawing 03031-1019; NI CL 1, DIV 2, GP A, B, C, D; T4(–50 °C≤ T_a ≤ +70 °C) [HART]; T4(–50 °C ≤ T_a ≤ +60 °C) [Fieldbus/PROFIBUS]; Type 4x

Special Conditions for Safe Use (X):

1. The Rosemount 3051 Transmitter housing contains aluminum and is considered a potential risk of ignition by impact or friction. Care must be taken into account during installation and use to prevent impact and friction.
2. The Rosemount 3051 Transmitter with the transient terminal block (option code T1) will not pass the 500 Vrms dielectric strength test and this must be taken into account during installation.

Range 6

Certificate	1053834
Standards	ANSI/ISA 12.27.01-2003, CSA Std. C22.2 No.142-M1987, CSA Std. C22.2. No.157-92

Markings IS Class I, II, III, Division 1 Groups A, B, C, D, E, F, and G when connected in accordance with Rosemount drawing 03031-1024, Suitable for Class I, Zone 0 Group IIC;
Class I, Division 2, Groups A, B, C and D; NIFW; Suitable for Class I Zone 2, Group IIC;
HART T4 (–60 °C ≤ T_a ≤ 70 °C); T5 (–60 °C ≤ T_a ≤ 40 °C)
Fieldbus/PROFIBUS: T4 (–60 °C ≤ T_a ≤ 60 °C)
Type 4X

IE USA FISCO

Range 1–5 Certificate FM16US0120X

Standards FM Class 3600 - 2011, FM Class 3610 - 2010, FM Class 3611 - 2004, FM Class 3810 - 2005

Markings IS CL I, DIV 1, GP A, B, C, D when connected per Rosemount drawing 03031-1019 (–50 °C ≤ T_a ≤ +60 °C); Type 4x

Special Conditions for Safe Use (X):

1. The Rosemount 3051 Transmitter housing contains aluminum and is considered a potential risk of ignition by impact or friction. Care must be taken into account during installation and use to prevent impact and friction.
2. The Rosemount 3051 Transmitter with the transient terminal block (option code T1) will not pass the 500 Vrms dielectric strength test and this must be taken into account during installation.

Range 6 Certificate 1053834

Standards ANSI/ISA 12.27.01-2003, CSA Std. C22.2 No.142-M1987, CSA Std. C22.2. No.157-92

Markings IS Class I, Division 1 Groups A, B, C, D, T4 (–60 °C ≤ T_a ≤ +60 °C) when connected in accordance with Rosemount drawing 03031-1024, Suitable for Class I, Zone 0 Group IIC; Type 4X; Factory Sealed; Single Seal (See drawing 03031-1053)

C6 Canada Explosion-proof, Dust Ignition-proof, Intrinsic Safety and Nonincendive

Certificate 1053834

Standards ANSI/ISA 12.27.01-2003, CSA Std. C22.2 No. 30 -M1986, CSA Std. C22.2 No.142-M1987, CSA Std. C22.2. No.157-92, CSA Std. C22.2 No. 213 - M1987

Markings Explosion-proof for Class I, Division 1, Groups B, C and D; Suitable for Class I, Zone 1, Group IIB+H2, T5 (–50 °C ≤ T_a ≤ 85 °C); Dust Ignition-proof Class II, III, Division 1, Groups E, F, G, T5 (–50 °C ≤ T_a ≤ 85 °C); Class III Division 1; Intrinsically Safe Class I, Division 1 Groups A, B, C, D when connected in accordance with Rosemount drawing 03031-1024, Temperature Code T4; Suitable for Class I, Zone 0; Class I Division 2 Groups A, B, C and D, T5 (–50 °C ≤ T_a ≤ 85 °C); Suitable for Class I Zone 2, Group IIC; Type 4X; Factory Sealed; Single Seal (See drawing 03031-1053)

E6 Canada Explosion-proof, Dust Ignition-proof and Division 2

Certificate 1053834

Standards ANSI/ISA 12.27.01-2003, CSA Std. C22.2 No. 30 -M1986, CSA Std. C22.2 No.142-M1987, CSA Std. C22.2 No. 213 - M1987

Markings Explosionproof Class I, Division 1, Groups B, C and D; Suitable for Class I, Zone 1, Group IIB+H2, T5;Dust Ignition-proof for Class II and Class III, Division 1, Groups E, F and G; T5 (–50 °C ≤ T_a ≤ 85 °C);Class I, Division 2, Groups A, B, C and D; T5; Suitable for Class I Zone 2, Group IIC; Type 4X; Factory Sealed; Single Seal (See drawing 03031-1053)

Europe

E8 ATEX Flameproof and Dust

Certificate KEMA 00ATEX2013X; Baseefa11ATEX0275X

Standards EN60079-0:2012 + A11:2013, EN60079-1:2014, EN60079-26:2015, EN60079-31:2009

Markings ⟨Ex⟩ II 1/2 G Ex db IIC T6...T4 Ga/Gb, T6 (–60 °C ≤ T_a ≤ +70 °C), T4/T5(–60 °C ≤ T_a ≤ +80 °C);
⟨Ex⟩ II 1 D Ex ta IIIC T95 °C T_{500} ≤105 °C Da (–20 °C ≤ T_a +85 °C)

Table 40: Process Temperature

Temperature class	Process temperature
T6	–60 to +70 °C
T5	–60 to +80 °C
T4	–60 to +120 °C

Special Conditions for Safe Use (X):

1. This device contains a thin wall diaphragm less than 1 mm thick that forms a boundary between Category 1 (process connection) and Category 2 (all other parts of the equipment). The model code and datasheet are to be consulted for details of the diaphragm material. During installation, maintenance, and use the environmental conditions to which the diaphragm will be subjected shall be taken into account. The manufacturer's instructions for installation and maintenance shall be followed in detail to assure safety during its expected lifetime.
2. Flameproof joints are not intended for repair.
3. Non-standard paint options may cause risk from electrostatic discharge. Avoid installations that could cause electrostatic build-up on painted surfaces, and only clean the painted surfaces with a damp cloth. If paint is ordered through a special option code, contact the manufacturer for more information.
4. Some variants of the equipment have reduced markings on the nameplate. Refer to the Certificate for full equipment marking.

I1 ATEX Intrinsic Safety and Dust

Certificate BAS97ATEX1089X; Baseefa11ATEX0275X

Standards EN60079-0:2012 + A11:2013, EN60079-11:2012, EN60079-31:2014

Markings HART: Ex II 1 G Ex ia IIC T5/T4 Ga, T5 (–60 °C ≤ T_a ≤ +40 °C), T4(–60 °C ≤ T_a ≤ +70 °C) Fieldbus/PROFIBUS: Ex II 1 G Ex ia IIC Ga T4(–60 °C ≤ T_a ≤ +60 °C) DUST: Ex II 1 D Ex ta IIIC T95 °C T_{500} 105 °C Da (–20 °C ≤ T_a ≤ +85 °C)

Table 41: Input Parameters

Parameter	HART	Fieldbus/PROFIBUS
Voltage U_i	30 V	30 V
Current I_i	200 mA	300 mA
Power P_i	0.9 W	1.3 W
Capacitance C_i	0.012 µF	0 µF
Inductance L_i	0 mH	0 mH

Special Conditions for Safe Use (X):

1. The apparatus is not capable of withstanding the 500 V insulation test required by clause 6.3.12 of EN60079-11:2012. This must be taken into account when installing the apparatus.
2. The enclosure may be made of aluminum alloy and given a protective polyurethane paint finish; however care should be taken to protect it from impact or abrasion if located in Zone 0.
3. Some variants of the equipment have reduced markings on the nameplate. Refer to the Certificate for full equipment marking.

IA ATEX FISCO

Certificate BAS97ATEX1089X

Standards EN60079-0:2012 + A11:2013, EN60079-11:2012

Markings ⟨Ex⟩ II 1 G Ex ia IIC T4 Ga (–60 °C ≤ T_a ≤ +60 °C)

Table 42: Input Parameters

	Fieldbus/PROFIBUS
Voltage U_i	17.5 V
Current I_i	380 mA
Power P_i	5.32 W
Capacitance C_i	≤ 5 nF
Inductance L_i	≤ 10 µH

Special Conditions for Safe Use (X):

1. The apparatus is not capable of withstanding the 500 V insulation test required by clause 6.3.12 of EN60079-11: 2012. This must be taken into account when installing the apparatus.
2. The enclosure may be made of aluminum alloy and given a protective polyurethane paint finish; however, care should be taken to protect it from impact or abrasion if located in Zone 0.

N1 ATEX Type n and Dust

Certificate BAS00ATEX3105X; Baseefa11ATEX0275X

Standards EN60079-0:2012 + A11:2013, EN60079-15:2010, EN60079-31:2014

Markings ⟨Ex⟩ II 3 G Ex nA IIC T5 Gc (–40 °C ≤ T_a ≤ +70 °C);

⟨Ex⟩ II 1 D Ex ta IIIC T95 °C T_{500} 105 °C Da (–20 °C ≤ T_a ≤ +85 °C)

Special Conditions for Safe Use (X):

1. This apparatus is not capable of withstanding the 500 V insulation test that is required by clause 6.8.1 of EN60079-15. This must be taken into account when installing the apparatus.
2. Some variants of the equipment have reduced markings on the nameplate. Refer to the Certificate for full equipment marking.

International

E7 IECEx Flameproof and Dust

Certificate IECEx KEM 09.0034X; IECEx BAS 10.0034X

Standards IEC60079-0:2011, IEC60079-1:2014-06, IEC60079-26:2014-10,IEC60079-31:2013

Markings Ex db IIC T6...T4 Ga/Gb, T6(–60 °C ≤ T_a ≤ +70 °C), T4/T5(–60 °C ≤ T_a ≤ +80 °C); Ex ta IIIC T95 °C T_{500}105 °C Da (–20 °C ≤ T_a ≤ +85 °C)

Table 43: Process Temperature

Temperature class	Process temperature
T6	–60 °C to +70 °C
T5	–60 °C to +80 °C
T4	–60 °C to +80 °C

Special Conditions for Safe Use (X):

1. This device contains a thin wall diaphragm less than 1 mm thick that forms a boundary between EPL Ga (process connection) and EPL Gb (all other parts of the equipment). The model code and datasheet are to be consulted for details of the diaphragm material. During installation, maintenance, and use the environmental conditions to which the diaphragm will be subjected shall be taken into account. The manufacturer's instructions for installation and maintenance shall be followed in detail to assure safety during its expected lifetime.
2. Flameproof joints are not intended for repair.
3. Non-standard paint options may cause risk from electrostatic discharge. Avoid installations that could cause electrostatic build-up on painted surfaces, and only clean the painted surfaces with a damp cloth. If paint is ordered through a special option code, contact the manufacturer for more information.
4. Some variants of the equipment have reduced markings on the nameplate. Refer to the Certificate for full equipment marking.

I7 IECEx Intrinsic Safety

Certificate	IECEx BAS 09.0076X
Standards	IEC60079-0:2011, IEC60079-11:2011
Markings	HART: Ex ia IIC T5/T4 Ga, T5(–60 °C ≤ T_a ≤ +40 °C), T4(–60 °C ≤ T_a ≤ +70 °C)
Fieldbus/PROFIBUS	Ex ia IIC T4(–60 °C ≤ T_a ≤ +60 °C)

Table 44: Input Parameters

Parameter	HART	Fieldbus/PROFIBUS
Voltage U_i	30 V	30 V
Current I_i	200 mA	300 mA
Power P_i	0.9 W	1.3 W
Capacitance C_i	0.012 µF	0 µF
Inductance L_i	0 mH	0 mH

Special Conditions for Safe Use (X):

1. If the apparatus is fitted with an optional 90 V transient suppressor, it is not capable of withstanding the 500 V insulation test required by clause 6.3.12 of IEC60079-11. This must be taken into account when installing the apparatus.
2. The enclosure may be made of aluminum alloy and given a protective polyurethane paint finish; however, care should be taken to protect it from impact or abrasion if located in Zone 0.

IA IECEx FISCO

Certificate	IECEx BAS 09.0076X
Standards	IEC60079-0:2011, IEC60079-11:2011
Markings	Ex ia IIC T4 Ga (–60 °C ≤ T_a ≤ + 60 °C)

Table 45: Input Parameters

Parameter	Fieldbus/ PROFIBUS
Voltage U_i	17.5 V
Current I_i	380 mA
Power P_i	5.32 W
Capacitance C_i	≤ 5 nF

Table 45: Input Parameters
(continued)

Parameter	Fieldbus/ PROFIBUS
Inductance L_i	≤ 10 µH

Special Conditions for Safe Use (X):

1. If the apparatus is fitted with an optional 90 V transient suppressor, it is not capable of withstanding the 500 V insulation test required by clause 6.3.12 of IEC 60079-11. This must be taken into account when installing the apparatus.
2. The enclosure may be made of aluminum alloy and given a protective polyurethane paint finish; however, care should be taken to protect it from impact or abrasion if located in Zone 0.

N7 IECEx Type n

Certificate	IECEx BAS 09.0077X
Standards	IEC60079-0:2011, IEC60079-15:2010
Markings	Ex nA IIC T5 Gc (–40 °C ≤ T_a ≤ +70 °C)

Special Condition for Safe Use (X):

1. The apparatus is not capable of withstanding the 500 V insulation test required by clause 6.5.1 of IEC60079-15. This must be taken into account when installing the apparatus.

Brazil

E2 INMETRO Flameproof

Certificate	UL-BR 13.0643X
Standards	ABNT NBR IEC60079-0:2008 + Errata 1:2011, ABNT NBR IEC60079-1:2009 + Errata 1:2011, ABNT NBRIEC60079-26:2008 + Errata 1:2008
Markings	Ex db IIC T6...T4 Ga/Gb, T6(–60 °C ≤ T_a ≤ +70 °C), T4/T5(–60 °C ≤ T_a ≤ +80 °C)

Special Conditions for Safe Use (X):

1. This device contains a thin wall diaphragm less than 1 mm thickness that forms a boundary between zone 0 (process connection) and zone 1 (all other parts of the equipment). The model code and datasheet are to be consulted for details of the diaphragm material. Installation, maintenance and use shall take into account the environmental conditions to which the diaphragm will be subjected. The manufacturer's instructions for installation and maintenance shall be followed in detail to assure safety during its expected lifetime.
2. Flameproof joints are not intended for repair.
3. Non-standard paint options may cause risk from electrostatic discharge. Avoid installations that could cause electrostatic build-up on painted surfaces, and only clean the painted surfaces with a damp cloth. If paint is ordered through a special option code, contact the manufacturer for more information.

I2 INMETRO Intrinsic Safety

Certificate	UL-BR 13.0534X
Standards	ABNT NBR IEC 60079-0:2008 + Errata 1:2011, ABNT NBR IEC 60079-11:2009
Markings	Ex ia IIC T4 IP66 Ga, T4(–40 °C ≤ T_a ≤ +70 °C)

Special Conditions for Safe Use (X):

1. See certificate for special conditions.

IB INMETRO FISCO

Certificate	UL-BR 13.0584X
Standards	ABNT NBR IEC60079-0:2013, ABNT NBR IEC60079-11:2013
Markings	Ex ia IIC T4 Ga (-60 °C ≤ T_a ≤ +60 °C)

Table 46: Input Parameters

	FISCO
Voltage U_i	17.5 V
Current I_i	380 mA
Power P_i	5.32 W
Capacitance C_i	≤ 5 nF
Inductance L_i	≤ 10 µH

Special Conditions for Safe Use (X):

1. If the equipment is fitted with an optional 90 V transient suppressor, it is not capable of withstanding the 500 V insulation test required by ABNT NBR IEC 60079-11. This must be taken into account when installing the equipment.
2. The enclosure may be made of aluminum alloy and given protective polyurethane paint finish; however, care should be taken to protect it from impact or abrasion if equipment requires EPL Ga.

China

E3 China Flameproof

Certificate	GYJ19.1056X [Transmitters]; GYJ15.1368X [Flow meters]
Standards	GB3836.1-2010, GB3836.2-2010, GB3836.20-2010,GB12476.1-2013,GB12476.5-2013
Markings	3051 Series: Ex d IIC T6 ~ T4 Ga/Gb, Ex tD A20 IP66 T95 °C T_{500} 105 °C (-20 °C ≤ Ta ≤ 85 °C) 3051CF Series: Ex d IIC T5/T6 Ga/Gb

I3 China Intrinsic Safety

Certificate	GYJ13.1362X; GYJ15.1367X [Flow Meters]
Standards	GB3836.1-2010, GB3836.4-2010, GB3836.20-2010, GB12476.1-2000
Markings	3051 Series: Ex ia IIC T4/T5 Ga, DIP A20 T_A 80 °C IP66 3051 CF Series: Ex ia IIC T4/T5 Ga

N3 China Type n

Certificate	GYJ20.1110X
Standards	GB3836.1-2010, GB3836.8-2014
Markings	Ex nA IIC T5 Gc (-40 °C ≤ Ta ≤ +70 °C)

Japan

E4 Japan Flameproof

Certificate	TC20577, TC20578, TC20583, TC20584 [HART]; TC20579, TC20580, TC20581, TC20582 [Fieldbus]
Markings	Ex d IIC T5

Republic of Korea

EP Republic of Korea Flameproof

Certificate 11-KB4BO-0188X [Mfg Singapore], 19-KA4BO-079X [Mfg USA]

Markings Ex d IIC T6...T4 Ga/Gb

IP Republic of Korea Intrinsic Safety

Certificate 13-KB4BO-0203X [HART® – Mfg USA], 13-KB4BO-0204X [Fieldbus – Mfg USA], 10-KB4BO-0138X [HART® – Mfg Singapore], 13-KB4BO-0206X [Fieldbus – Mfg Singapore] 18-KA4BO-0354X [HART® – Mfg USA], 18-KA4BO-0355X [Fieldbus – Mfg USA]

Markings Ex ia IIC T5/T4 (HART®); Ex ia IIC T4 (Fieldbus)

Technical Regulations Customs Union (EAC)

EM EAC Flameproof

Markings Ga/Gb Ex d IIC T4... T6 X,
T4/T5(–60 °C ≤ T_a ≤ +80 °C),
T6(–60 °C ≤ T_a ≤ +70 °C)

Special Condition for Safe Use (X):

See certificate for special conditions.

IM EAC Intrinsically Safe

Markings HART: 0Ex ia IIC T4/T5 Ga X, T4(–60 °C ≤ T_a ≤ +70 °C), T5(–60 °C ≤ T_a ≤ +40 °C) Fieldbus/PROFIBUS: 0Ex ia IIC T4 Ga X (–60 °C ≤ T_a ≤ +60 °C)

Special Condition for Safe Use (X):

See certificate for special conditions.

Combinations

K2 Combination of E2 and I2

K5 Combination of E5 and I5

K6 Combination of C6, E8, and I1

K7 Combination of E7, I7, and N7

K8 Combination of E8, I1, and N1

KB Combination of E5, I5, and C6

KD Combination of E8, I1, E5, I5, and C6

KM Combination of EM and IM

KP Combination of EP and IP

Additional certifications

SBS American Bureau of Shipping (ABS) Type Approval
Certificate: 18-HS1814795-PDA

Intended Use: Marine & Offshore Applications – Measurement of either gauge or absolute pressure for liquid, gas and vapor.

SBV Bureau Veritas (BV) Type Approval
Certificate: 23155

Requirements: Bureau Veritas Rules for the Classification of Steel Ships

Application: Class notations: AUT-UMS, AUT-CCS, AUT-PORT and AUT-IMS; Pressure transmitter type 3051 cannot be installed on diesel engines.

SDN Det Norske Veritas (DNV) Type Approval
Certificate: TAA000004F

Intended Use: DNV GL Rules for Classification – Ships and offshore units

Application:

Location classes	
Temperature	D
Humidity	B
Vibration	A
EMC	B
Enclosure	D

SLL Lloyds Register (LR) Type Approval
Certificate: LR21173788TA

Application: Environmental categories ENV1, ENV2, ENV3, and ENV5

C5 Custody Transfer - Measurement Canada Accuracy Approval
Certificate: AG-0226; AG-0454; AG-047

Rosemount 2051

Rev 1.24

European directive information

A copy of the EU Declaration of Conformity can be found at the end of the Quick Start Guide. The most recent revision of the EU Declaration of Conformity can be found at Emerson.com/Rosemount.

Ordinary location certification

As standard, the transmitter has been examined and tested to determine that the design meets the basic electrical, mechanical, and fire protection requirements by a nationally recognized test laboratory (NRTL) as accredited by the Federal Occupational Safety and Health Administration (OSHA).

Hazardous Locations Certification

Note
Device ambient temperature ratings and electrical parameters may be limited to the levels dictated by the hazardous location certificate parameters.

North America

E5 USA Explosionproof (XP) and Dust-Ignitionproof (DIP)

Certificate: FM16US0232

Standards: FM Class 3600 – 2011, FM Class 3615 – 2006, FM Class 3616 – 2011, FM Class 3810 – 2005, ANSI/NEMA 250 – 2008, ANSI/IEC 60529 2004

Markings: XP CL I, DIV 1, GP B, C, D; DIP CL II, DIV 1, GP E, F, G; CL III; T5(–50 °C ≤ T_a ≤ +85 °C); Factory Sealed; Type 4X

I5 USA Intrinsic Safety (IS) and Nonincendive (NI)

Certificate: FM16US0231X (HART™)

Standards: FM Class 3600 – 2011, FM Class 3610 – 2010, FM Class 3611 – 2004, FM Class 3810 – 2005, ANSI/NEMA 250 – 2008

Markings: IS CL I, DIV 1, GP A, B, C, D; CL II, DIV 1, GP E, F, G; Class III; DIV 1 when connected per Rosemount drawing 02051-1009; Class I, Zone 0; AEx ia IIC T4; NI CL 1, DIV 2, GP A, B, C, D; T4(–50 °C ≤ T_a ≤ +70 °C); Type 4X

Specific Condition of Use (X):

The Model 2051 transmitter housing contains aluminum and is considered a potential risk of ignition by impact or friction. Care must be taken into account during installation and use to prevent impact and friction.

Certificate: 2041384 (HART™/Fieldbus/Profibus)

Standards: ANSI/ISA 12.27.01-2003, CSA Std. C22.2 No.142-M1987, CSA Std. C22.2. No.157-92

Markings: IS CL I, DIV 1, GP A, B, C, D; CL II, DIV 1, GP E, F, G; Class III; DIV 1 when connected per Rosemount drawing 02051-1009; Class I, Zone 0; AEx ia IIC T4; NI CL 1, DIV 2, GP A, B, C, D; T4(-50 °C ≤ Ta ≤ +70 °C); Type 4x

IE USA FISCO

Certificate: FM16US0231X (HART™)

Standards: FM Class 3600 – 2011, FM Class 3610 – 2010, FM Class 3611 – 2004, FM Class 3810 – 2005

Markings: IS CL I, DIV 1, GP A, B, C, D when connected per Rosemount drawing 02051-1009 (–50 °C ≤ T_a ≤ +60 °C); Type 4X

Specific Condition of Use (X):

The Model 2051 transmitter housing contains aluminum and is considered a potential risk of ignition by impact or friction. Care must be taken into account during installation and use to prevent impact and friction.

Certificate: 2041384 (HART™/Fieldbus/Profibus)

Standards: ANSI/ISA 12.27.01-2003, CSA Std. C22.2 No. 30 -M1986, CSA Std. C22.2 No.142-M1987, CSA Std. C22.2 No. 213 - M1987

Markings: IS CL I, DIV 1, GP A, B, C, D when connected per Rosemount drawing 02051-1009 (-50 °C ≤ T_a ≤ +60 °C); Type 4x

E6 Canada Explosion-Proof, Dust Ignition-Proof

Certificate: 2041384

Standards: CAN/CSA C22.2 No. 0-10, CSA Std C22.2 No. 25-1966, CSA Std C22.2 No. 30-M1986, CAN/CSA-C22.2 No. 94-M91, CSA Std C22.2 No.142-M1987, CAN/CSA-C22.2 No.157-92, CSA Std C22.2 No. 213-M1987, CAN/CSA-E60079-0:07, CAN/CSA-E60079-1:07, CAN/CSA-E60079-11-02, CAN/CSA-C22.2 No. 60529:05, ANSI/ISA-12.27.01–2003

Markings: Explosion-Proof for Class I, Divisions 1, Groups B, C, and D. Dust Ignition-proof for Class II and Class III, Division 1, Groups E, F, and G. Suitable for Class I, Division 2; Groups A, B, C, and D for indoor and outdoor hazardous locations. Class I Zone 1 Ex d IIC T5. Enclosure type 4X, factory sealed. Single Seal.

I6 Canada Intrinsic Safety

Certificate: 2041384

Standards: CSA Std. C22.2 No. 142 - M1987, CSA Std. C22.2 No. 213 - M1987, CSA Std. C22.2 No. 157 - 92, CSA Std. C22.2 No. 213 - M1987, ANSI/ISA 12.27.01 – 2003, CAN/CSA-E60079-0:07, CAN/CSA-E60079-11:02

Markings: Intrinsically safe for Class I, Division 1, Groups A, B, C, and D when connected in accordance with Rosemount drawing 02051-1008. Ex ia IIC T3C. Single Seal. Enclosure Type 4X.

IF Canada FISCO

Certificate: 2041384

Standards: CSA Std. C22.2 No. 142 - M1987, CSA Std. C22.2 No. 213 - M1987, CSA Std. C22.2 No. 157 - 92, CSA Std. C22.2 No. 213 - M1987, ANSI/ISA 12.27.01 – 2003, CAN/CSA-E60079-0:07, CAN/CSA-E60079-11:02

Markings: Intrinsically safe for Class I, Division 1, Groups A, B, C, and D when connected in accordance with Rosemount drawing 02051-1008. Ex ia IIC T3C. Single Seal. Enclosure Type 4X.

Europe

E1 ATEX/UKEX Flameproof

ATEX Certificate: KEMA 08ATEX0090X

UKEX Certificate: DEKRA 21UKEX0288X

Standards: EN IEC 60079-0:2018, EN 60079-1:2014, EN 60079-26:2015

Markings: ⟨Ex⟩ II 1/2 G Ex db IIC Ga/Gb T6 (–60 °C ≤ T_a ≤ +70 °C); T4/T5 (-60 °C ≤ T_a ≤ +80 °C)

Table 47: Process Connection Temperature

Temperature class	Process connection temperature	Ambient temperature
T6	–60 °C to +70 °C	–60 °C to +70 °C

Table 47: Process Connection Temperature *(continued)*

Temperature class	Process connection temperature	Ambient temperature
T5	–60 °C to +80 °C	–60 °C to +80 °C
T4	–60 °C to +120 °C	–60 °C to +80 °C

Special Conditions for Safe Use (X):

1. Appropriate cable, glands and plugs need to be suitable for a temperature of 5 °C greater than maximum specified temperature for location where installed.
2. Non- standard paint options may cause risk from electrostatic discharge. Avoid installations that could cause electrostatic build-up on painted surfaces, and only clean the painted surfaces with a damp cloth. If paint is ordered through a special option code, contact the manufacturer for more information.
3. This device contains a thin wall diaphragm less than 1 mm thick that forms a boundary between Category 1G (process connection) and Category 2G (all other parts of the equipment). The model code and datasheet are to be consulted for details of the diaphragm material. During installation, maintenance and use the environmental conditions to which the diaphragm will be subjected shall be taken into account. The manufacturer's instructions for installation and maintenance shall be followed in detail to assure safety during its expected lifetime.
4. Flameproof joints are not intended for repair.

Conduit/cable entries

Unless otherwise marked, the conduit/cable entries in the housing enclosure use a ½-14 NPT form. Only use plugs, adapters, glands, or conduit with a compatible thread form when closing these entries. Entries marked M20 are M20 x 1.5 thread form. On devices with multiple conduit entries, all entries will have the same thread form. When installing in a hazardous location, use only appropriately listed or Ex certified plugs, glands, or adapters in cable/conduit entries.

I1 ATEX Intrinsic Safety

Certificate: Baseefa08ATEX0129X

Standards: EN60079-0:2012+A11:2013, EN60079-11:2012

Markings: ⟨Ex⟩ II 1 G Ex ia IIC T4 Ga (–60 °C ≤ T_a ≤ +70 °C)

Table 48: Input Parameters

	HART™	Fieldbus/PROFIBUS
Voltage U_i	30 V	30 V
Current I_i	200 mA	300 mA
Power P_i	1 W	1.3 W
Capacitance C_i	0.012 µF	0 µF
Inductance L_i	0 mH	0 mH

Special Conditions for Safe Use (X):

1. If the equipment is fitted with an optional 90 V transient suppressor, it is incapable of withstanding the 500 V isolation from earth test and this must be taken into account during installation.
2. The enclosure may be made of aluminum alloy and given a protective polyurethane paint finish; however care should be taken to protect it from impact and abrasion when located in Zone 0.

IA ATEX FISCO

Certificate: Baseefa08ATEX0129X

Standards: EN60079-0:2012+A11:2013, EN60079-11:2012

Markings: ⟨Ex⟩ II 1 G Ex ia IIC T4 Ga (–60 °C ≤ T_a ≤ +60 °C)

Table 49: Input Parameters

	FISCO
Voltage U_i	17.5 V
Current I_i	380 mA
Power P_i	5.32 W
Capacitance C_i	0 µF
Inductance L_i	0 mH

Special Conditions for Safe Use (X):

1. If the equipment is fitted with an optional 90 V transient suppressor, it is incapable of withstanding the 500 V isolation from earth test and this must be taken into account during installation.
2. The enclosure may be made of aluminum alloy and given a protective polyurethane paint finish; however care should be taken to protect it from impact and abrasion when located in Zone 0.

N1 ATEX Type n

Certificate: Baseefa08ATEX0130X

Standards: EN60079-0:2012+A11:2013, EN60079-15:2010

Markings: ⟨Ex⟩ II 3G Ex nA IIC T4 Gc (–40 °C ≤ T_a ≤ +70 °C)

Special Condition for Safe Use (X):

If the equipment is fitted with an optional 90 V transient suppressor, it is incapable of withstanding the 500 V electrical strength test as defined in clause 6.5.1 of by EN 60079-15:2010. This must be taken into account during installation.

ND ATEX Dust

Certificate: Baseefa08ATEX0182X

Standards: EN60079-0:2012+A11:2013, EN60079-31:2009

Markings: ⟨Ex⟩ II 1 D Ex ta IIIC T95 °C T_{500} 105 °C Da (–20 °C ≤ T_a ≤ +85 °C)

Special Condition for Safe Use (X):

If the equipment is fitted with an optional 90 V transient suppressor, it is incapable of withstanding the 500 V isolation from earth test and this must be taken into account during installation.

International

E7 IECEx Flameproof

Certificate: IECExKEM08.0024X

Standards: IEC 60079-0:2017, IEC 60079-1:2014-06, IEC 60079-26:2014-10

Markings: Ex db IIC T6... T4 Ga/Gb T6(–60 °C ≤ T_a ≤ +70 °C), T4/T5(–60 °C ≤ T_a ≤ +80 °C)

Table 50: Process Connection Temperature

Temperature class	Process connection temperature	Ambient temperature
T6	–60 °C to +70 °C	–60 °C to +70 °C
T5	–60 °C to +80 °C	–60 °C to +80 °C
T4	–60 °C to +120 °C	–60 °C to +80 °C

Special Conditions for Safe Use (X):

1. This device contains a thin wall diaphragm less than 1 mm thick that forms a boundary between EPL Ga (process connection) and EPL Gb (all other parts of the equipment). The model code and datasheet are to be consulted for details of the diaphragm material. During installation, maintenance and use the environmental conditions to which the diaphragm will be subjected shall be taken into account. The manufacturer's instructions for installation and maintenance shall be followed in detail to assure safety during its expected lifetime.
2. Appropriate cable, glands and plugs need to be suitable for a temperature of 5 °C greater than maximum specified temperature for location where installed.
3. Flameproof joints are not intended for repair.
4. Non-standard paint options may cause risk from electrostatic discharge. Avoid installations that could cause electrostatic build-up on painted surfaces, and only clean the painted surfaces with a damp cloth. If paint is ordered through a special option code, contact the manufacturer for more information.

Conduit/cable entries

Unless otherwise marked, the conduit/cable entries in the housing enclosure use a ½-14 NPT form. Only use plugs, adapters, glands, or conduit with a compatible thread form when closing these entries. Entries marked M20 are M20 x 1.5 thread form. On devices with multiple conduit entries, all entries will have the same thread form. When installing in a hazardous location, use only appropriately listed or Ex certified plugs, glands, or adapters in cable/conduit entries.

I7 IECEx Intrinsic Safety

Certificate:	IECExBAS 08.0045X
Standards:	IEC60079-0:2011, IEC60079-11:2011
Markings:	Ex ia IIC T4 Ga (–60 °C ≤ T_a ≤ +70 °C)

Table 51: Input Parameters

	HART™	Fieldbus/PROFIBUS
Voltage U_i	30 V	30 V
Current I_i	200 mA	300 mA
Power P_i	1 W	1.3 W
Capacitance C_i	12 nF	0 µF
Inductance L_i	0 mH	0 mH

Special Conditions for Safe Use (X):

1. If the equipment is fitted with an optional 90 V transient suppressor, it is incapable of withstanding the 500 V isolation from earth test and this must be taken into account during installation.
2. The enclosure may be made of aluminum alloy and given a protective polyurethane paint finish; however care should be taken to protect it from impact and abrasion when located in Zone 0.
3. The equipment contains thin wall diaphragms. The installation, maintenance and use shall take into account the environmental conditions to which the diaphragms will be subjected. The manufacturer’s instructions for installation and maintenance shall be followed in detail to assure safety during its expected lifetime.

IG IECEx FISCO

Certificate:	IECExBAS 08.0045X
Standards:	IEC60079-0:2011, IEC60079-11:2011
Markings:	Ex ia IIC T4 Ga (–60 °C ≤ T_a ≤ +60 °C)

Table 52: Input Parameters

	FISCO
Voltage U_i	17.5 V
Current I_i	380 mA
Power P_i	5.32 W
Capacitance C_i	0 nF
Inductance L_i	0 µH

Special Conditions for Safe Use (X):

1. If the equipment is fitted with an optional 90 V transient suppressor, it is incapable of withstanding the 500 V isolation from earth test and this must be taken into account during installation.
2. The enclosure may be made of aluminum alloy and given a protective polyurethane paint finish; however care should be taken to protect it from impact and abrasion when located in Zone 0.
3. The equipment contains thin wall diaphragms. The installation, maintenance and use shall take into account the environmental conditions to which the diaphragms will be subjected. The manufacturer's instructions for installation and maintenance shall be followed in detail to assure safety during its expected lifetime.

N7 IECEx Type n

Certificate: IECExBAS 08.0046X

Standards: IEC60079-0:2011, IEC60079-15:2010

Markings: Ex nA IIC T4 Gc (–40 °C ≤ T_a ≤ +70 °C)

Special Condition for Safe Use (X):

If fitted with a 90 V transient suppressor, the equipment is not capable of withstanding the 500 V electrical strength test as defined in clause 6.5.1 of IEC60079-15:2010. This must be taken into account during installation.

Brazil

E2 Brazil Flameproof

Certificate: UL-BR 14.0375X

Standards: ABNT NBR IEC60079-0:2008 + Errata 1:2011, ABNT NBR IEC 60079-1:2009 + Errata 1:2011, ABNT NBR IEC 60079-26:2008 + Errata 1:2009

Markings: Ex db IIC T6...T4 Ga/Gb IP66, T6(–60 °C ≤ T_a ≤ +70 °C), T4/T5(–60 °C ≤ T_a ≤ +80 °C)

Special Conditions for Safe Use (X):

1. The device contains a thin wall diaphragm less than 1 mm thickness that forms a boundary between zone 0 (process connection) and zone 1 (all other parts of the equipment). The model code and datasheet are to be consulted for details of the diaphragm material. Installation, maintenance and use shall take into account the environmental conditions to which the diaphragm will be subjected. The manufacturer's instructions for installation and maintenance shall be followed in detail to assure safety during its expected lifetime.
2. Flameproof joints are not intended for repair.
3. Non-standard paint options may cause risk from electrostatic discharge. Avoid installations that could cause electrostatic build-up on painted surfaces, and only clean the painted surfaces with a damp cloth. If paint is ordered through a special option code, contact the manufacturer for more information.

I2 Brazil Intrinsic Safety

Certificate: UL-BR 14.0759X

Standards: ABNT NBR IEC 60079-0:2013; ABNT NBR IEC 60079-11:2013

Markings: Ex ia IIC T4 Ga (–60 °C ≤ T_a ≤ +70 °C)

Table 53: Input Parameters

	HART™	Fieldbus/PROFIBUS
Voltage U_i	30 V	30 V
Current I_i	200 mA	300 mA
Power P_i	1 W	1.3 W
Capacitance C_i	12 nF	0
Inductance L_i	0	0

Special Conditions for Safe Use (X):

1. If the equipment is fitted with an optional 90 V transient suppressor, it is incapable of withstanding the 500 V insulation from earth test and this must be taken into account during installation.
2. The enclosure may be made of aluminium alloy and given a protective polyurethane paint finish; however care should be taken to protect it from impact and abrasion when located in atmospheres that require EPL Ga.

IB Brazil FISCO

Certificate: UL-BR 14.0759X

Standards: ABNT NBR IEC 60079-0:2008 + Errata 1:2011; ABNT NBR IEC 60079-11:2009

Markings: Ex ia IIC T4 Ga (–60 °C ≤ T_a ≤ +60 °C)

Table 54: Input Parameters

	FISCO
Voltage U_i	17.5 V
Current I_i	380 mA
Power P_i	5.32 W
Capacitance C_i	0 nF
Inductance L_i	0 µH

Special Conditions for Safe Use (X):

1. If the equipment is fitted with an optional 90 V transient suppressor, it is incapable of withstanding the 500 V insulation from earth test and this must be taken into account during installation.
2. The enclosure may be made of aluminium alloy and given a protective polyurethane paint finish; however care should be taken to protect it from impact and abrasion when located in atmospheres that require EPL Ga.

China

E3 China Flameproof

Certificate: GYJ18.1432X; GYJ20.1485X [Flow meters]

Standards: GB3836.1-2010, GB3836.2-2010, GB3836.20-2010-2010

Markings: Pressure Transmitter: Ex d IIC Gb, T6~T4 Ga/Gb
Flow meter: Ex d IIC T5/T6 Ga/Gb

I3 China Intrinsic Safety

Certificate: GYJ17.1225X; GYJ20.1487X [Flow meters]

Standards: GB3836.1-2010, GB3836.4-2010, GB3836.20-2010

Markings: Ex ia IIC T4 Ga

Korea

EP Korea Flameproof

Certificate: 12-KB4BO-0342X, 12-KB4BO-0344X, 19-KB4BO-0978X

Markings: Ex d IIC T6...T4 Ga/Gb, T4/T5 (-60 °C ≤ T_a ≤ +80 °C), T6 (-60 °C ≤ T_a ≤ +70 °C)

Special Condition for Safe Use (X):

See certificate for special conditions.

IP Korea Intrinsic Safety

Certificate: 12-KB4BO-0343X, 12-KB4BO-0345X, 13-KB4BO-0205X, 13-KB4BO-0207X, 18-KA4BO-0309X

Markings: Ex ia IIC T4 (-60 °C ≤ T_a ≤ +70 °C)

Special Condition for Safe Use (X):

See certificate for special conditions.

Japan

E4 Japan Flameproof

Certificate: TC20598, TC20599, TC20602, TC20603 [HART]; TC20600, TC20601, TC20604, TC20605 [Fieldbus]

Markings: Ex d IIC T5

Technical Regulations Customs Union (EAC)

EM EAC Flameproof

Certificate: EAEC RU C-US.EX01.B.00175

Markings: Ga/Gb Ex d IIC X, T5 (–50 °C ≤ T_a ≤ +80 °C), T6 (–50 °C ≤ T_a ≤ +65 °C)

Special Condition for Safe Use (X):

See certificate for special conditions.

IM EAC Intrinsically Safe

Certificate: EAEC RU C-US.EX01.B.00175

Markings: 0Ex ia IIC T4 Ga X (–60 °C ≤ T_a ≤ +70 °C)

Special Condition for Safe Use (X):

See certificate for special conditions.

Combinations

K1 combination of E1, I1, N1, and ND

K2 combination of E2 and I2

K5 combination of E5 and I5

K6 combination of E6 and I6

K7 combination of E7, I7, N7 and IECEx Dust

IECEx Dust

Certificate: IECExBAS 08.0058X

Standards: IEC60079-0:2011, IEC60079-31:2008

Markings: Ex tA IIIC T95 °C T500 105 °C Da (–20 °C ≤ T_a ≤ +85 °C)

Special Condition for Safe Use (X):

If the equipment is fitted with an optional 90 V transient suppressor, it is incapable of withstanding a 500 V isolation from earth test and this must be taken into account during installation.

KA combination of E1, I1, and K6

KB combination of K5 and K6

KC combination of E1, I1, and K5

KD combination of K1, K5, and K6

KP combination of EP and IP

KM combination of EM and IM

Additional Certifications

SBS American Bureau of Shipping (ABS) Type Approval

Certificate: 18-HS1753847-PDA

Intended Use: Marine and Offshore Applications Measurement of either Gauge or Absolute Pressure for Liquid, Gas, and Vapor

ABS Rules: 2018 Steel Vessels Rules 1-1-4/7.7, 1-1-Appendix 3, 1-1-Appendix 4

SBV Bureau Veritas (BV) Type Approval

Certificate: 23157 BV

BV Rules: Bureau Veritas Rules for the Classification of Steel Ships

Application: Class notations: AUT-UMS, AUT-CCS, AUT-PORT and AUT-IMS; Pressure transmitter type 2051 cannot be installed on diesel engines.

SDN Det Norske Veritas (DNV) Type Approval

Certificate: TAA00004F

Intended Use: DNV GL Rules for Classification — Ships and offshore units

Application:

Location classes	
Type	2051

Location classes	
Temperature	D
Humidity	B
Vibration	A
EMC	B
Enclosure	D

SLL Lloyds Register (LR) Type Approval

Certificate: LR21173788TA

Application: Environmental categories ENV1, ENV2, ENV3, and ENV5

Rosemount 3051 Wireless

Rosemount 3051 Wireless product certifications

Rev 1.11

European directive information

A copy of the EU Declaration of Conformity can be found at the end of the Quick Start Guide. The most recent revision of the EU Declaration of Conformity can be found at Emerson.com/Rosemount.

Telecommunication compliance

All wireless devices require certification to ensure that they adhere to regulations regarding the use of the RF spectrum. Nearly every country requires this type of product certification. Emerson is working with governmental agencies around the world to supply fully compliant products and remove the risk of violating country directives or laws governing wireless device usage.

FCC and IC

This device complies with Part 15 of the FCC Rules. Operation is subject to the following conditions: This device may not cause harmful interference. This device must accept any interference received, including interference that may cause undesired operation. This device must be installed to ensure a minimum antenna separation distance of 20 cm from all persons.

Ordinary location certification

As standard, the transmitter has been examined and tested to determine that the design meets the basic electrical, mechanical, and fire protection requirements by a nationally recognized test laboratory (NRTL) as accredited by the Federal Occupational Safety and Health Administration (OSHA).

Installing in North America

The US National Electrical Code (NEC) and the Canadian Electrical Code (CEC) permit the use of Division marked equipment in Zones and Zone marked equipment in Divisions. The markings must be suitable for the area classification, gas, and temperature class. This information is clearly defined in the respective codes.

USA

I5 U.S.A. Intrinsically Safe (IS)

Ranges 1–5

Certificate	FM19US0050X
Standards	FM Class 3600:2018, FM Class 3610:2018, FM Class 3810:2018, ANSI/ISA 60079-0:2013, ANSI/UL 60079-11:2014, NEMA 250:2003, ANSI/IEC 60529:2014, ANSI/UL 61010:2016
Markings	IS CL I, DIV 1, GP A, B, C, D T4; CL 1, Zone 0 AEx ia IIC T4; T4(–40 °C ≤ T_a ≤ +70 °C) when installed per Rosemount drawing 03031-1062; Type 4X/IP66/IP68

Special Conditions for Safe Use (X):

1. The Rosemount 3051 Wireless Pressure Transmitter shall only be used with the 701PGNKF Rosemount SmartPower Battery Pack.
2. The inline pressure sensor may contain more than 10% aluminum and is considered a potential risk of ignition by impact or friction. Care must be taken into account during installation and used to prevent impact and friction.
3. The surface resistivity of the transmitter housing is greater than one gigaohm. To avoid electrostatic charge build-up, it must not be rubbed or cleaned with solvents or a dry cloth

Range 6 Certificate	CSA 2526009

Standards	FM Class 3600 – 2011, FM Class 3610 – 2010, FM Class 3810 – 2005, ANSI/ISA 60079-0 – 2009, ANSI/ISA 60079-11 – 2009, UL 61010-1 (3rd edition), UL50E (1st Edition)
Markings	IS CL I, DIV 1, GP A, B, C, D T4; CL 1, Zone 0 AEx ia IIC T4; T4(-40 °C ≤ T_a ≤ +70 °C) when installed per Rosemount drawing 03031-1063; Type 4X/IP66/IP68

Canada

I6 Canada Intrinsically Safe

Certificate	CSA 2526009
Standards	CAN/CSA C22.2 No. 0-M91, CAN/CSA C22.2 No.94-M91, CSA Std C22.2 No. 142-M1987, CSA Std C22.2 No. 157-92, CSA Std C22.2 No. 60529:05
Markings	Intrinsically Safe for Class I, Division 1, Groups A, B, C, D, T4 when installed per Rosemount drawing 03031-1063; Type 4X/IP66/IP68

Europe

I1 ATEX Intrinsic Safety

Certificate	Baseefa12ATEX0228X
Standards	EN 60079-0: 2012, EN 60079-11: 2012
Markings	Ex II 1 G Ex ia IIC T4 Ga, T4(-60 °C ≤ T_a ≤ +70 °C) IP66/IP68

Special Conditions for Safe Use (X):

1. The plastic enclosure may constitute a potential electrostatic ignition risk and must not be rubbed or cleaned with a dry cloth.
2. The Model 701PGNKF Power Module may be replaced in a hazardous area. The power module has a surface resistivity greater than 1 GΩ and must be properly installed in the wireless device enclosure. Care must be taken during transportation to and from the point of installation to prevent electrostatic charge build-up.

International

I7 IECEx Intrinsic Safety

Certificate	IECEx BAS 12.0124X
Standards	IEC 60079-0: 2011, IEC 60079-11: 2011
Markings	Ex ia IIC T4 Ga, T4(-60 °C ≤ T_a ≤ +70 °C) IP66/IP68

Special Conditions for Safe Use (X):

1. The plastic enclosure may constitute a potential electrostatic ignition risk and must not be rubbed or cleaned with a dry cloth.
2. The Model 701PGNKF Power Module may be replaced in a hazardous area. The power module has a surface resistivity greater than 1 GΩ and must be properly installed in the wireless device enclosure. Care must be taken during transportation to and from the point of installation to prevent electrostatic charge build-up.

Brazil

China

I3 China Intrinsic Safety

Certificate	GYJ13.1362X, GYJ15.1367X [Flow meters]
Standards	GB3836.1-2010, GB3836.4-2010, GB3836.20-2010
Markings	Ex ia IIC T4 Ga, T4(–40~+70 °C)

Special Condition for Safe Use (X):

See certificate for special conditions.

Japan

I4 TIIS Intrinsic Safety

Certificate	TC22022X (Rosemount 3051C/L), TC22023X (Rosemount 3051T), TC22024X (Rosemount 3051CFx)
Markings	Ex ia IIC T4 Ga, T4(–20 °C ≤ T_a ≤ +60 °C)

Special Condition for Safe Use (X):

See certificate for special conditions.

EAC - Belarus, Kazakhstan, Russia

IM Technical Regulation Customs Union (EAC) Intrinsic Safety

Certificate	EAЭC RU C-US.EX01.B.00176/20
Markings	0Ex ia IIC T4 Ga X; (-60 °C ≤ T_a ≤ +70 °C)

Special Condition for Safe Use (X):

See certificate for special conditions.

Korea

IP Korea Intrinsic Safety

Certificate	13-KB4BO-0295X
Markings	Ex ia IIC T4 (–40 °C ≤ T_a ≤ +70 °C)

Special Condition for Safe Use (X):

See certificate for special conditions.

Additional certifications

SBS American Bureau of Shipping (ABS) Type Approval

Certificate 15-HS1405241-PDA

Intended Use Marine & Offshore Applications – Measurement of either gauge or absolute pressure for liquid, gas and vapor.

SBV Bureau Veritas (BV) Type Approval

Certificate 23155

Requirements Bureau Veritas Rules for the Classification of Steel Ships

Application Class notations: AUT-UMS, AUT-CCS, AUT-PORT and AUT-IMS; Pressure transmitter type 3051 cannot be installed on diesel engines

SDN Det Norske Veritas (DNV) Type Approval

Certificate TAA000004F

Intended Use DNV GL Rules for Classification - Ships and offshore units

Application

Location classes	
Temperature	D
Humidity	B
Vibration	A
EMC	B
Enclosure	D

Rosemount 2051 Wireless

Rosemount 2051 Wireless Product Certifications

Rev 1.10

European directive information

A copy of the EC Declaration of Conformity can be found at the end of the Quick Start Guide. The most recent revision of the EC Declaration of Conformity can be found at Emerson.com/Rosemount.

Telecommunication compliance

All wireless devices require certification to ensure that they adhere to regulations regarding the use of the RF spectrum. Nearly every country requires this type of product certification. Emerson is working with governmental agencies around the world to supply fully compliant products and remove the risk of violating country directives or laws governing wireless device usage.

FCC and IC

This device complies with Part 15 of the FCC Rules. Operation is subject to the following conditions: This device may not cause harmful interference. This device must accept any interference received, including interference that may cause undesired operation. This device must be installed to ensure a minimum antenna separation distance of 20 cm from all persons.

Ordinary location certification

As standard, the transmitter has been examined and tested to determine that the design meets the basic electrical, mechanical, and fire protection requirements by a nationally recognized test laboratory (NRTL) as accredited by the Federal Occupational Safety and Health Administration (OSHA).

Installing in North America

The US National Electrical Code (NEC) and the Canadian Electrical Code (CEC) permit the use of Division marked equipment in Zones and Zone marked equipment in Divisions. The markings must be suitable for the area Classification, gas, and temperature Class. This information is clearly defined in the respective codes.

USA

I5 U.S.A. Intrinsically Safe (IS)

Certificate	FM19US0050X
Standards	FM Class 3600 – 2018, FM Class 3610 – 2018, FM Class 3810 – 2018, ANSI/ISA 60079-0:2013, ANSI/UL 60079-11:2014, NEMA 250: 2003, ANSI/IEC 60529:2014, ANSI/UL 61010:2016
Markings	IS CL I, DIV 1, GP A, B, C, D T4; CL 1, Zone 0 AEx ia IIC T4; T4(–40 °C ≤ T_a ≤ +70 °C) when installed per Rosemount drawing 03031-1062; Type 4X/IP66/IP68

Special Conditions for Safe Use (X):

1. The Model 2051 Wireless Pressure Transmitter shall only be used with the 701PGNKF Rosemount SmartPower Battery Pack.
2. The inline pressure sensor may contain more than 10% aluminum and is considered a potential risk of ignition by impact or friction. Care must be taken into account during installation and used to prevent impact and friction.
3. The surface resistivity of the transmitter housing is greater than one gigaohm. To avoid electrostatic charge build-up, it must not be rubbed or cleaned with solvents or a dry cloth.

Canada

I6 Canada Intrinsically Safe

Certificate	CSA 2526009

Standards	CAN/CSA C22.2 No. 0-M91, CAN/CSA C22.2 No. 94-M91, CSA Std C22.2 No. 142-M1987, CSA Std C22.2 No. 157-92, CSA Std C22.2 No. 60529:05
Markings	Intrinsically Safe for Class I, Division 1, Groups A, B, C, D, T4 when installed per Rosemount drawing 03031-1063; Type 4X/IP66/IP68

Europe

I1 ATEX Intrinsic Safety

Certificate	Baseefa12ATEX0228X
Standards	EN 60079-0: 2012, EN 60079-11: 2012
Markings	II 1 G Ex ia IIC T4 Ga, T4(–40 °C ≤ T_a ≤ +70 °C) IP66/IP68

Special Conditions for Safe Use (X):

1. The plastic enclosure may constitute a potential electrostatic ignition risk and must not be rubbed or cleaned with a dry cloth.
2. The Model 701PGNKF Power Module may be replaced in a hazardous area. The power module has a surface resistivity greater than 1GΩ and must be properly installed in the wireless device enclosure. Care must be taken during transportation to and from the point of installation to prevent electrostatic charge build-up.

International

I7 IECEx Intrinsic Safety

Certificate	IECEx BAS 12.0124X
Standards	IEC 60079-0: 2011, IEC 60079-11: 2011
Markings	Ex ia IIC T4 Ga, T4(–40 °C ≤ T_a ≤ +70 °C) IP66/IP68

Special Conditions for Safe Use (X):

1. The plastic enclosure may constitute a potential electrostatic ignition risk and must not be rubbed or cleaned with a dry cloth.
2. The Model 701PGNKF Power Module may be replaced in a hazardous area. The power module has a surface resistivity greater than 1GΩ and must be properly installed in the wireless device enclosure. Care must be taken during transportation to and from the point of installation to prevent electrostatic charge build-up.

Brazil

I2 INMETRO Intrinsic Safety

Certificate	UL-BR 13.0534X
Standards	ABNT NBR IEC 60079-0:2008 + Errata 1:2011, ABNT NBR IEC 60079-11:2009
Markings	Ex ia IIC T4 IP66 Ga, T4(–40 °C ≤ T_a ≤ +70 °C)

Special Condition for Safe Use (X):

See certificate for special conditions.

China

I3 China Intrinsic Safety

Certificate	GYJ17.1225X GYJ17.1225X GYJ15.1365X [Flow meters]
Standards	GB3836.1-2010, GB3836.4-2010, GB3836.20-2010
Markings	Ex ia IIC Ga T4, –40_+70 °C

Special Condition for Safe Use (X):

See certificate for special conditions.

Japan

I4 TIIS Intrinsic Safety

Certificate	TC22022X (2051C/L) TC22023X (2051T)
Standards	TC22024X (2051CFx)
Markings	Ex ia IIC T4 Ga, T4(-20..+60 °C)

Special Condition for Safe Use (X):

See certificate for special conditions.

EAC - Belarus, Kazakhstan, Russia

IM Technical Regulation Customs Union (EAC) Intrinsic Safety

Certificate	EAЭC RU C-US.EX01.B.00175/20
Markings	0Ex ia IIC T4 Ga X; (-60 °C ≤ Ta ≤ +70 °C)

Special Condition for Safe Use (X):

See certificate for special conditions.

Korea

IP Korea Intrinsic Safety

Certificate	13-KB4BO-0220X
Markings	Ex ia IIC T4 (–40 °C ≤ T_a ≤ +70 °C)

Special Condition for Safe Use (X):

See certificate for special conditions.

Additional certifications

SBS American Bureau of Shipping (ABS) Type Approval

Certificate: 15-HS1405241-PDA

Intended use: Marine & Offshore Applications – Measurement of either gauge or absolute pressure for liquid, gas and vapor.

ABS rules: 2015 Steel Vessels Rules 1-1-4/7.7, 1-1-Appendix 3, 1-1-Appendix 4

SBV Bureau Veritas (BV) Type Approval

Certificate: 23157 BV

BV rules: Bureau Veritas Rules for the Classification of Steel Ships

Application: Class notations: AUT-UMS, AUT-CCS, AUT-PORT and AUT-IMS; Pressure transmitter type 2051 cannot be installed on diesel engines.

SDN Det Norske Veritas (DNV) Type Approval

Certificate: TAA000004F

Intended use: DNV GL Rules for Classification - Ships and offshore units

Application:

Location classes	
Type	2051
Temperature	B
Humidity	B
Vibration	A
EMC	B
Enclosure	D

Dimensional drawings

Figure 14: Rosemount 3051S ERS Measurement Transmitter - Coplanar Style

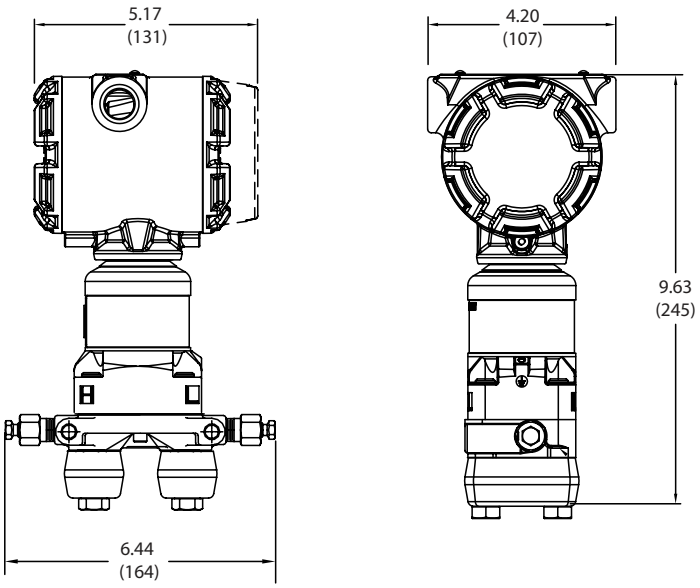

Note
Dimensions are in inches (millimeters).

Figure 15: Rosemount 3051S ERS Measurement Transmitter - In-Line Style

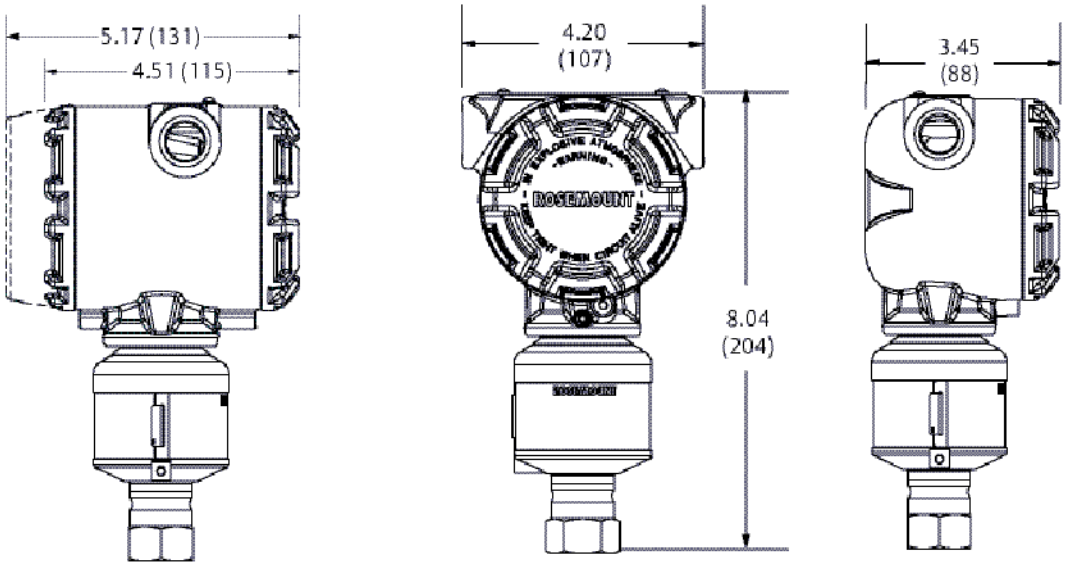

Note
Dimensions are in inches (millimeters).

Figure 16: Rosemount 3051S Scalable Level Transmitter with FF - Coplanar Style

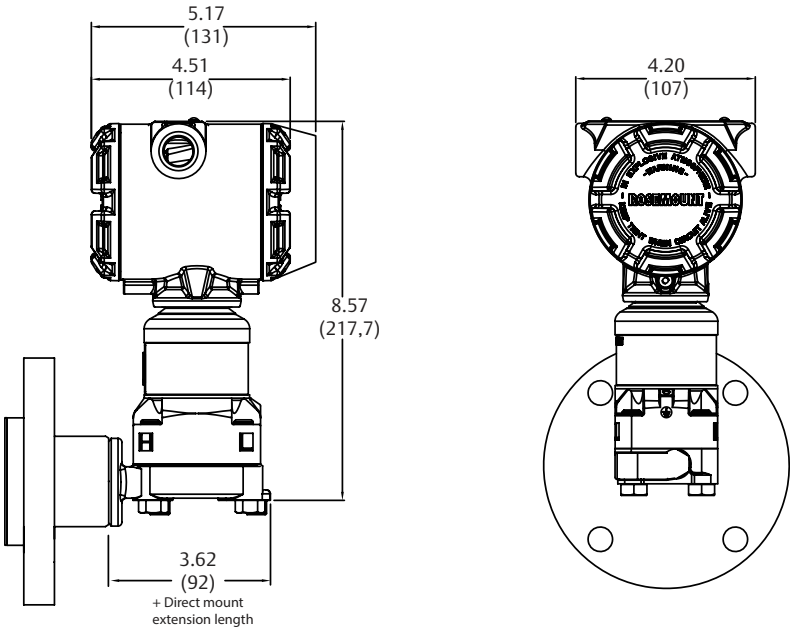

Lower housing (flushing ring) is available with FFW style flange.

Note
Dimensions are in inches (millimeters).

Figure 17: Rosemount 3051S Scalable Level Transmitter with FF - In-Line Style

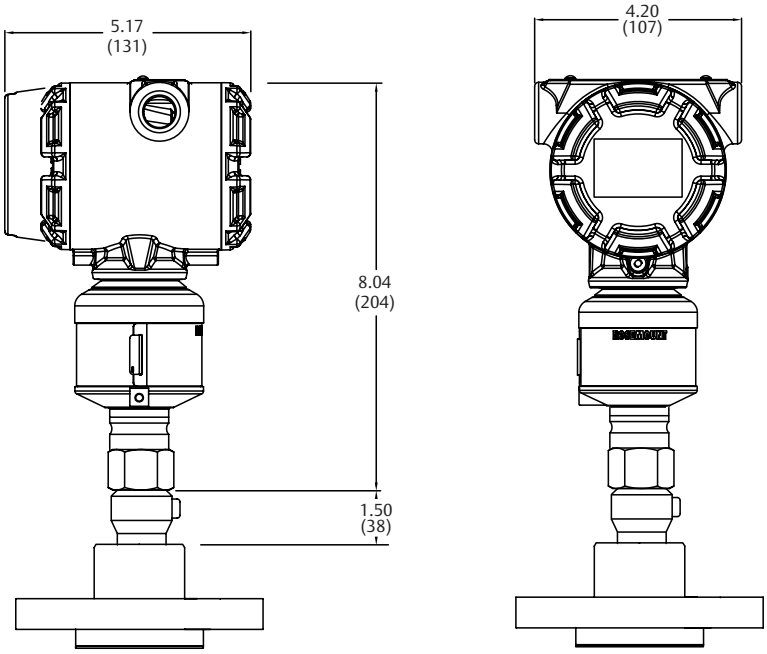

Lower housing (flushing ring) is available with FFW style flange.

Note
Dimensions are in inches (millimeters).

Figure 18: Rosemount 3051S Scalable Level Transmitter with Thermal Range Expander – Coplanar Style

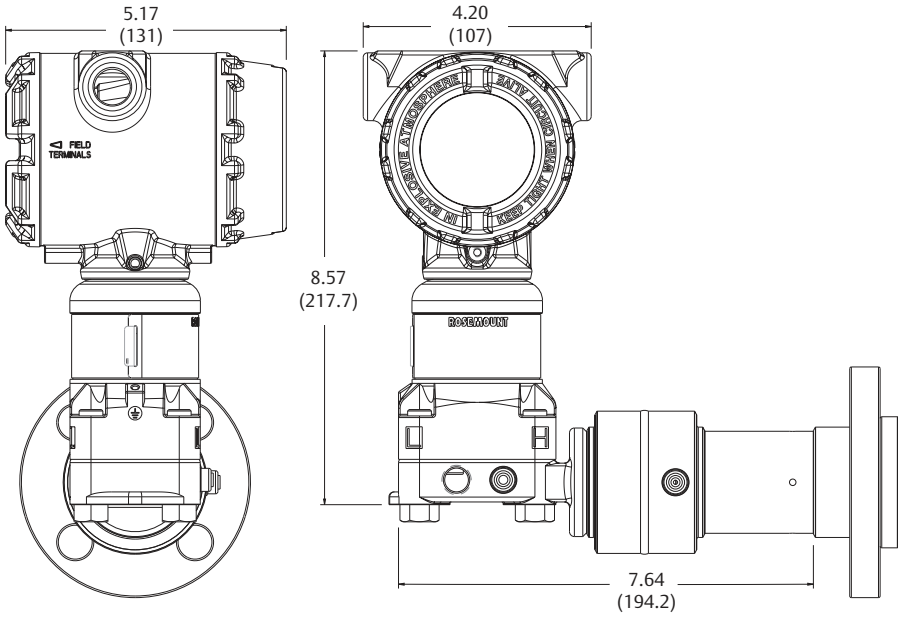

Note
Dimensions are in inches (millimeters).

Figure 19: Rosemount 3051S Scalable Level Transmitter with Thermal Range Expander – In-Line Style

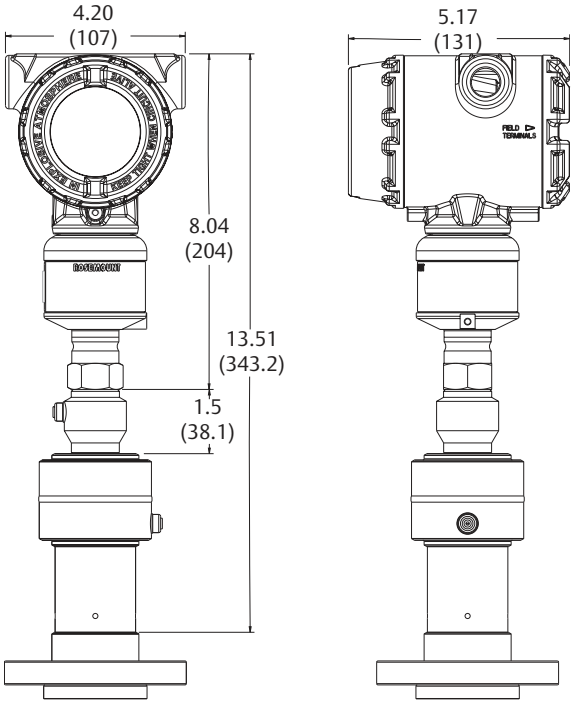

Note
Dimensions are in inches (millimeters).

Figure 20: Rosemount 3051S Scalable Level Transmitter with RF - Coplanar Style

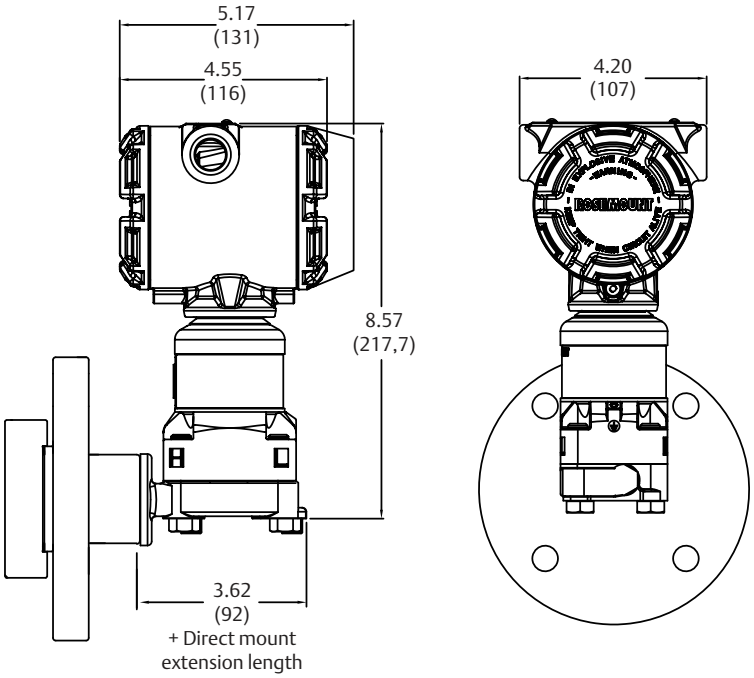

Note
Dimensions are in inches (millimeters).

Figure 21: Rosemount 3051S Scalable Level Transmitter with RF - In-Line Style

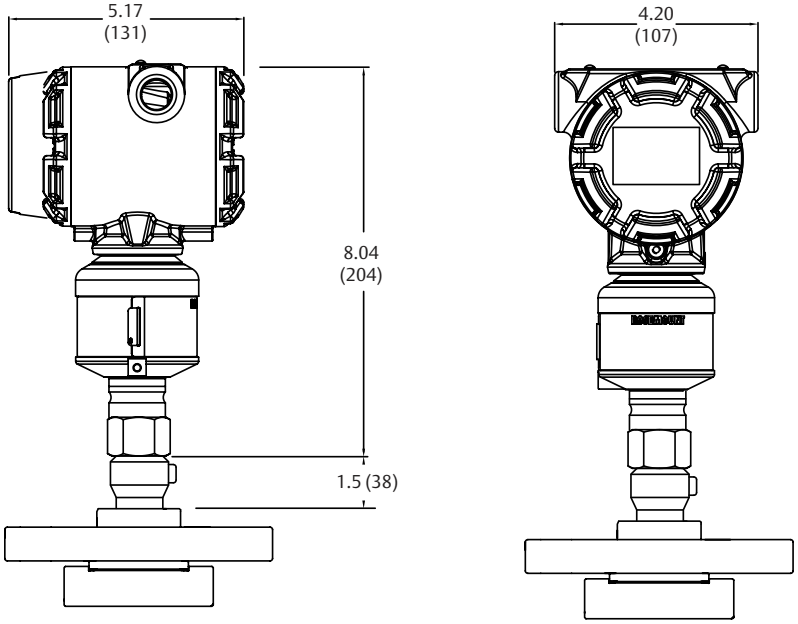

Note
Dimensions are in inches (millimeters).

Figure 22: Rosemount 3051S Scalable Level Transmitter with SS - Coplanar Style

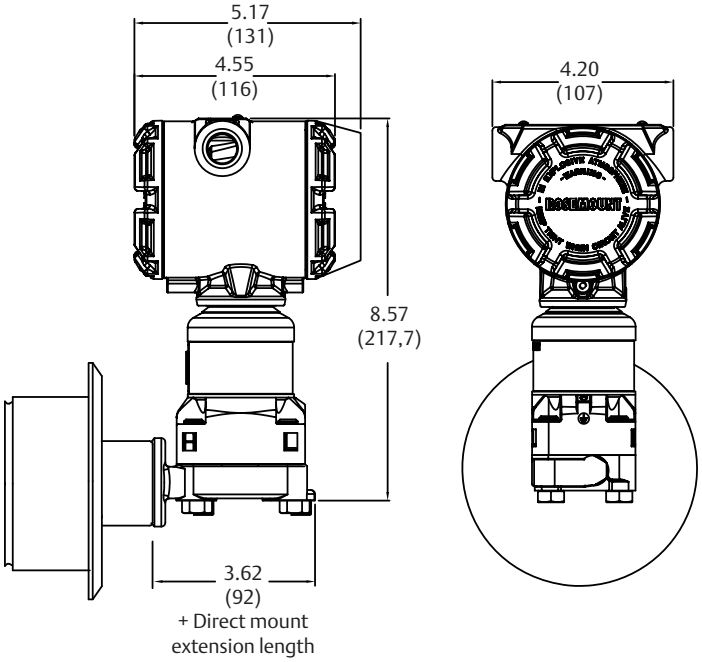

Note
Dimensions are in inches (millimeters).

Figure 23: Rosemount 3051S Scalable Level Transmitter with SS - In-Line Style

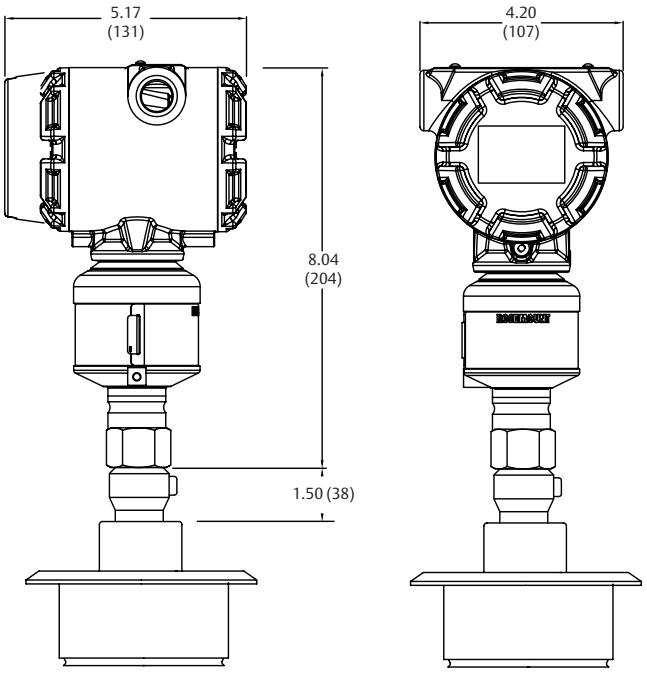

Note
Dimensions are in inches (millimeters).

Figure 24: Rosemount 3051S Scalable Level Transmitter with SC - Coplanar Style

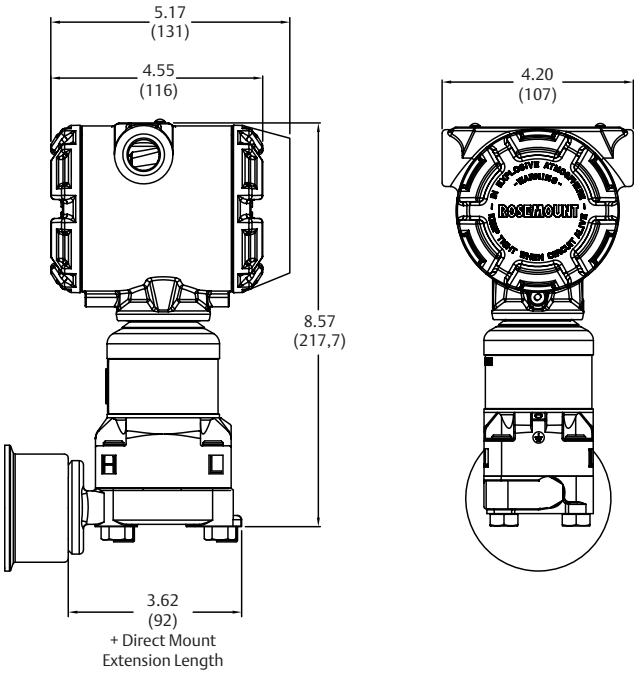

Note
Dimensions are in inches (millimeters).

Figure 25: Rosemount 3051S Scalable Level Transmitter with SC - In-Line Style

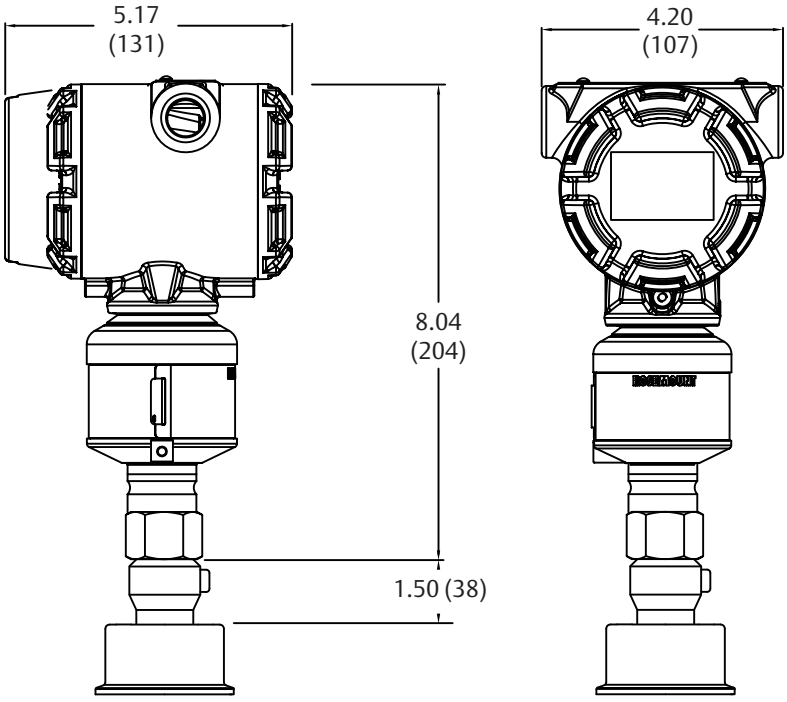

Note
Dimensions are in inches (millimeters).

Figure 26: Rosemount 3051L Level Transmitter with FF or EF Seal

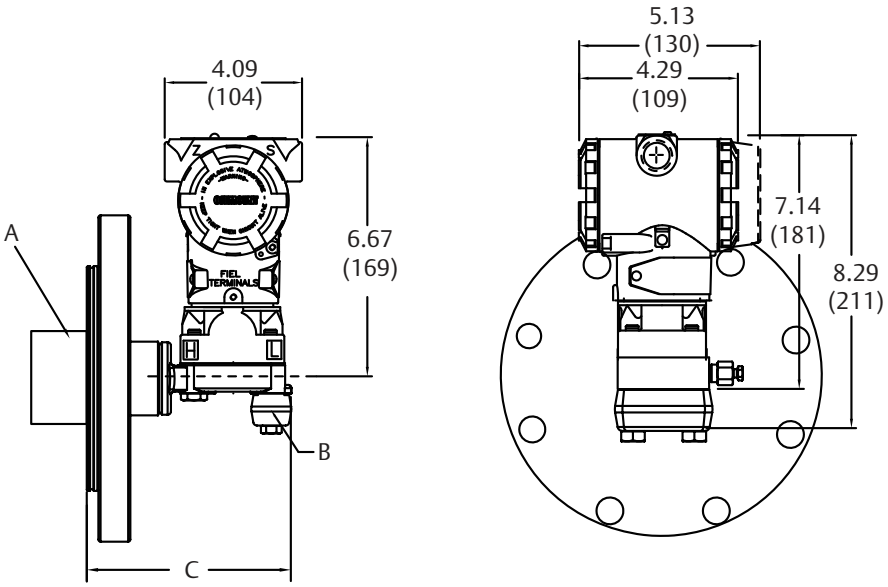

A. 2-, 4-, or 6-in. extension (only available with 3- and 4-in. flange configurations)
B. Flange adapters (optional, differential configuration only)
C. Extension dimension

Note
Dimensions are in inches (millimeters).

Table 55: Transmitter Direct Mount Extension

Flange rating	Transmitter flange extension	Extension dimension
ASME B16.5 Class 600	2-in.	7.65-in. (194.3 mm)
All others	0-in.	5.65-in. (143.5 mm)

Figure 27: Rosemount 2051L Level Transmitter with FF or EF Seal

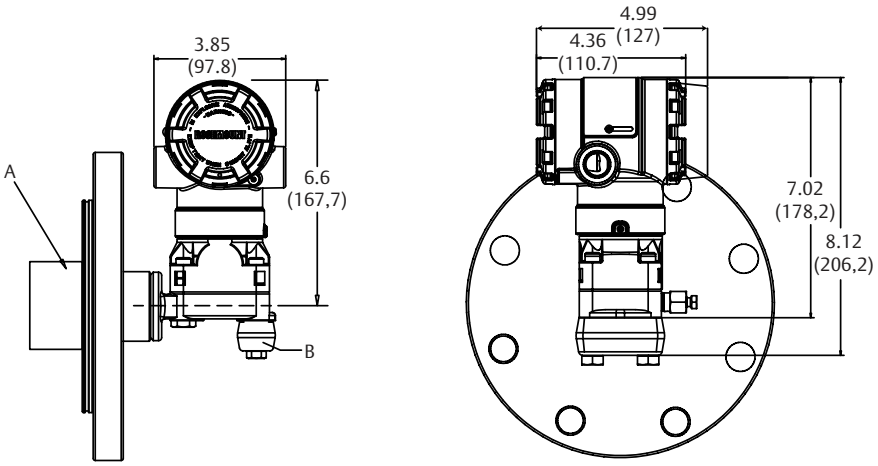

A. 2-. 4-, or 6-in. extension (only available with 3- and 4-in. flange configurations)
B. Flange adapters (optional, differential configuration only)

Note
Dimensions are in inches (millimeters).

Figure 28: Tuned System Assembly with Rosemount 3051S Scalable Level Transmitter

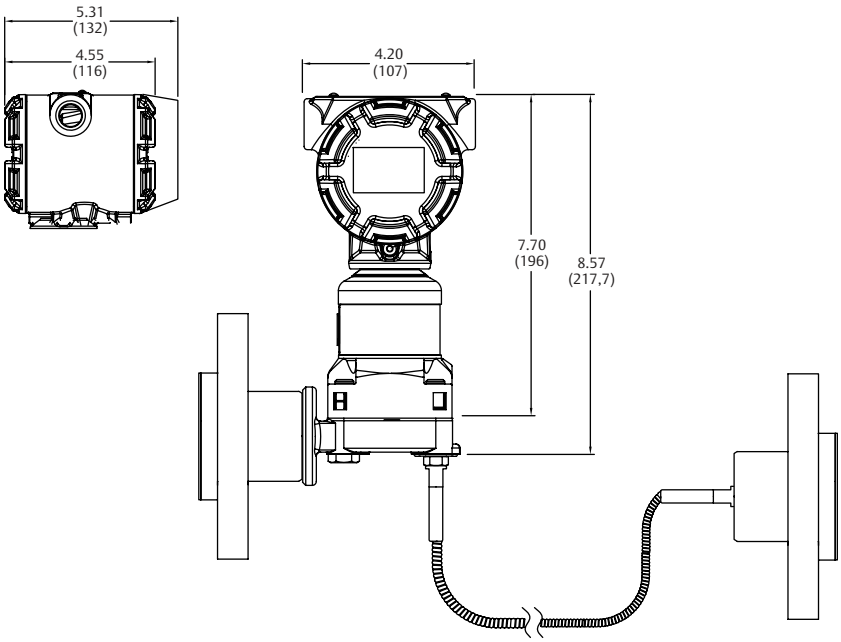

Tuned System Assemblies require specification of capillary length and addition Rosemount 1199 Remote Seal.

Tuned System Assemblies are available on all level transmitters.

Note
Dimensions are in inches (millimeters).

Figure 29: Rosemount 3051S Coplanar Transmitter with Remote Mount 1199 Diaphragm Seal Systems - Connection Types A, B, and C

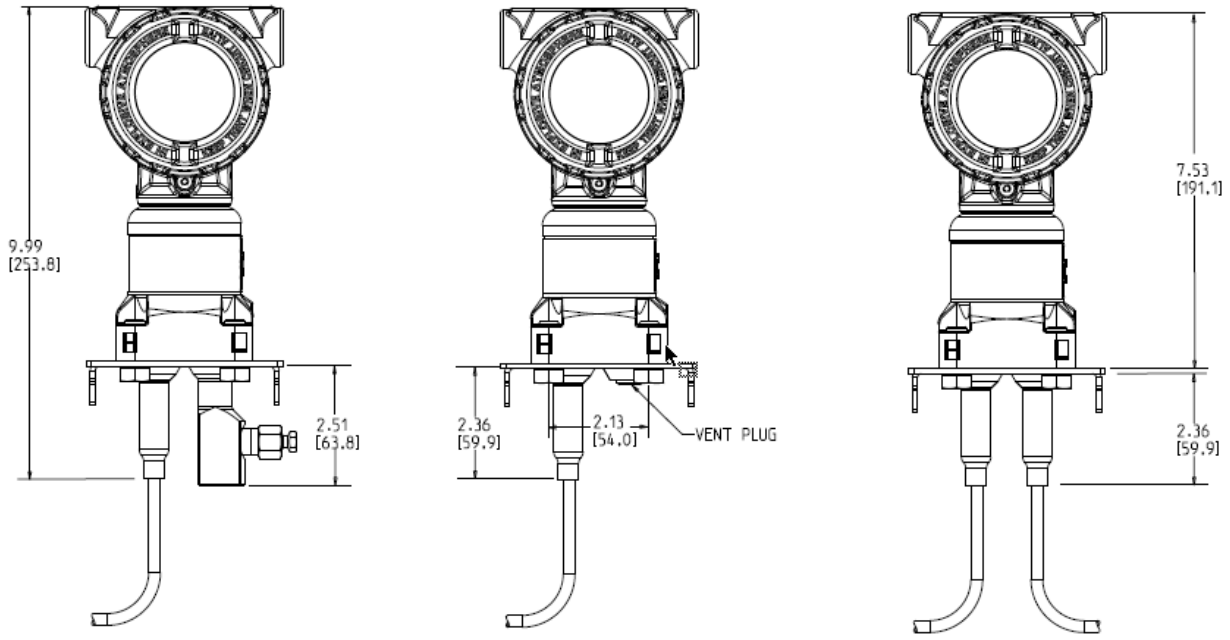

Note
Dimensions are in inches (millimeters).

Figure 30: 4-in. Extension (C5) or Thermal Optimizer (D5) with FFW

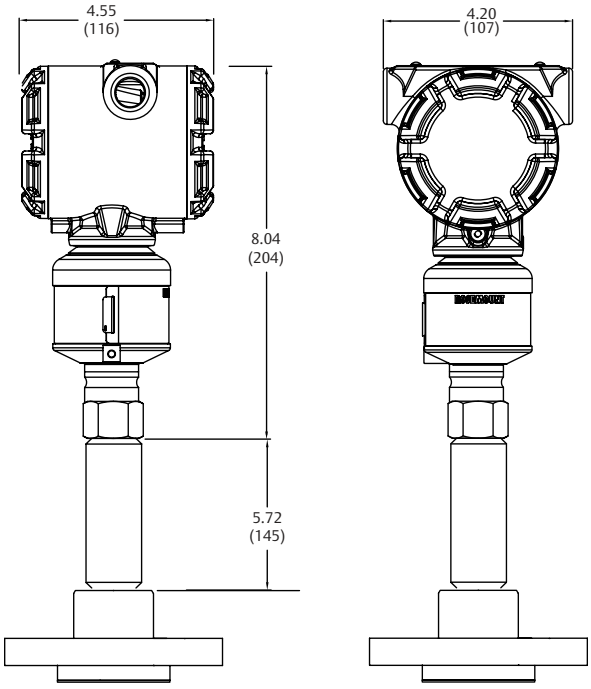

Note
Dimensions are in inches (millimeters).

Figure 31: FFW Flush Flanged Seal - Standard (Two-Piece) Design (Shown with Flushing Ring)

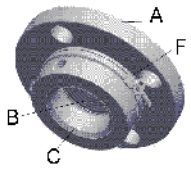

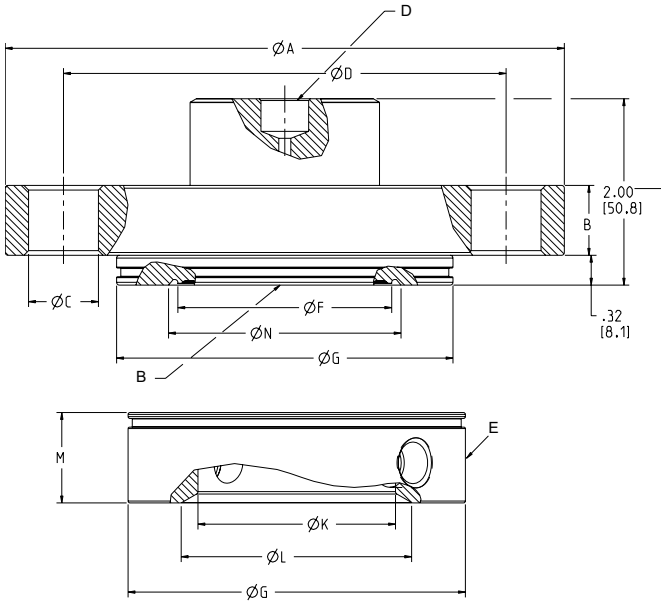

A. Process flange
B. Diaphragm
C. Flushing connection
D. Connection to transmitter
E. Flushing ring
F. Lower housing alignment clamp (option code SA)

Note
Dimensions are in inches (millimeters).

Table 56: Dimensions for FFW Flush Flanged Raised Face Seals-Two Piece (Upper Housing and Flange) Design

Pipe size	Class	Flange diameter "A" in. (mm)	Flange thickness "B" in. (mm)	Bolt circle "C" in. (mm)	Number of bolts	Bolt hole diameter "D" in. (mm)	Standard diaphragm diameter "F" in. (mm)	Raised face outer diameter "G" in. (mm)
ASME								
2-in.	150	6.00 (152)	0.69 (18)	4.75 (121)	4	0.75 (19)	2.30 (58)	3.62 (92)
	300	6.50 (165)	0.81 (21)	5.00 (127)	8	0.75 (19)	2.30 (58)	3.62 (92)
	600	6.50 (165)	1.00 (25)	5.00 (127)	8	0.75 (19)	2.30 (58)	3.62 (92)
	900	8.50 (216)	1.50 (38)	6.50 (165)	8	1.00 (25)	2.30 (58)	3.62 (92)
	1500	8.50 (216)	1.50 (38)	6.50 (165)	8	1.00 (25)	2.30 (58)	3.62 (92)
	2500	9.25 (235)	2.00 (51)	6.75 (172)	8	1.13 (29)	2.30 (58)	3.62 (92)
3-in.	150	7.50 (191)	0.88 (22)	6.00 (152)	4	0.75 (19)	3.50 (89)	5.00 (127)
	300	8.25 (210)	1.06 (27)	6.62 (168)	8	0.88 (22)	3.50 (89)	5.00 (127)
	600	8.25 (210)	1.25 (32)	6.62 (168)	8	0.88 (22)	3.50 (89)	5.00 (127)
	900	9.50 (241)	1.50 (38)	7.50 (191)	8	1.00 (25)	3.50 (89)	5.00 (127)
	1500	10.50 (267)	1.88 (48)	8.00 (203)	8	1.25 (32)	3.50 (89)	5.00 (127)
	2500	12.00 (305)	2.62 (67)	9.00 (229)	8	1.38 (35)	3.50 (89)	5.00 (127)
4-in.	150	9.00 (229)	0.88 (22)	7.50 (191)	8	0.75 (19)	3.50 (89)	6.20 (157)
	300	10.0 (254)	1.19 (30)	7.88 (200)	8	0.88 (22)	3.50 (89)	6.20 (157)
	600	10.75 (273)	1.50 (38)	8.50 (216)	8	1.00 (25)	3.50 (89)	6.20 (157)

Table 56: Dimensions for FFW Flush Flanged Raised Face Seals-Two Piece (Upper Housing and Flange) Design *(continued)*

Pipe size	Class	Flange diameter "A" in. (mm)	Flange thickness "B" in. (mm)	Bolt circle "C" in. (mm)	Number of bolts	Bolt hole diameter "D" in. (mm)	Standard diaphragm diameter "F" in. (mm)	Raised face outer diameter "G" in. (mm)
	900	11.50 (292)	1.75 (45)	9.25 (235)	8	1.25 (32)	3.50 (89)	6.20 (157)
	1500	12.25 (311)	2.12 (54)	9.50 (241)	8	1.38 (35)	3.50 (89)	6.20 (157)
	2500	14.00 (356)	3.00 (76)	10.75(274)	8	1.63 (41)	3.50 (89)	6.20 (157)
EN1092-1								
DN 50	PN 40	6.50 (165)	0.67 (17)	4.92 (125)	4	0.71 (18)	2.30 (58)	4.00 (102)
	PN 63	7.09 (180)	0.91 (23)	5.31 (135)	4	0.88 (22)	2.30 (58)	4.00 (102)
	PN 100	7.68 (195)	0.99 (25)	5.71 (145)	4	1.02 (26)	2.30 (58)	4.00 (102)
	PN 160	7.68 (195)	1.06 (27)	5.71 (145)	4	1.02 (26)	2.30 (58)	4.00 (102)
DN 80	PN 40	7.87 (200)	0.83 (21)	6.30 (160)	8	0.71 (18)	3.50 (89)	5.43 (138)
	PN 63	8.46 (215)	0.99 (25)	6.69 (170)	8	0.88 (22)	3.50 (89)	5.43 (138)
	PN 100	9.06 (230)	1.15 (29)	7.09 (180)	8	1.02 (26)	3.50 (89)	5.43 (138)
	PN 160	9.06 (230)	1.30 (33)	7.09 (180)	8	1.02 (26)	3.50 (89)	5.43 (138)
DN 100	PN 10/16	8.66 (220)	0.67 (17)	7.09 (180)	8	0.71 (18)	3.50 (89)	6.20 (157)
	PN 40	9.25 (235)	0.94 (24)	7.48 (190)	8	0.88 (22)	3.50 (89)	6.20 (157)
	PN 63	9.84 (250)	0.83 (21)	7.87 (200)	8	1.02 (26)	3.50 (89)	6.20 (157)
	PN 100	10.43 (265)	1.30 (27)	8.27 (210)	8	1.18 (30)	3.50 (89)	6.20 (157)
	PN 160	10.43 (265)	1.46 (37)	8.27 (210)	8	1.18 (30)	3.50 (89)	6.20 (157)
JIS								
50A	10K	6.10 (155)	0.63 (16)	4.72 (120)	4	0.75 (19)	2.30 (58)	3.62 (92)
	20K	6.10 (155)	0.71 (18)	4.72 (120)	8	0.75 (19)	2.30 (58)	3.62 (92)
	40K	6.50 (165)	1.02 (26)	5.12 (130)	8	0.75 (19)	2.30 (58)	4.00 (102)
80A	10K	7.28 (185)	0.71 (18)	5.91 (150)	8	0.75 (19)	3.50 (89)	5.00 (127)
	20K	7.87 (200)	0.88 (22)	6.30 (160)	8	0.91 (23)	3.50 (89)	5.00 (127)
	40K	8.27 (210)	1.26 (32)	6.69 (170)	8	0.91 (23)	3.50 (89)	5.43 (138)
100A	10K	8.27 (210)	0.71 (18)	6.89 (175)	8	0.75 (19)	3.50 (89)	6.20 (157)
	20K	8.86 (225)	0.95 (24)	7.28 (185)	8	0.91 (23)	3.50 (89)	6.20 (157)
	40K	9.84 (250)	1.42 (36)	8.07 (205)	8	0.98 (25)	3.50 (89)	6.20 (157)

Table 57: Dimensions for FFW Flush Flanged Raised Face Seals-Two Piece (Upper Housing and Flange) Design

Pipe size	Class	Inner diameter "K" in. (mm)	Beveled edge "L" in. (mm)	Thickness with ¼-NPT F.C. "M" in. (mm)	Thickness with ½-NPT F.C. "M" in. (mm)	Minimum gasket I.D. "N" in. (mm)	Weight lb (kg)
ASME							
2-in.	150	2.12 (54)	2.48 (63)	0.97 (25)	1.30 (33)	2.50 (64)	7.40 (3.33)
	300	2.12 (54)	2.48 (63)	0.97 (25)	1.30 (33)	2.50 (64)	8.99 (4.05)
	600	2.12 (54)	2.48 (63)	0.97 (25)	1.30 (33)	2.50 (64)	10.44 (4.70)
	900	2.12 (54)	2.48 (63)	0.97 (25)	1.30 (33)	2.50 (64)	24.62 (11.08)
	1500	2.12 (54)	2.48 (63)	0.97 (25)	1.30 (33)	2.50 (64)	24.62 (11.08)
	2500	2.12 (54)	2.48 (63)	0.97 (25)	1.30 (33)	2.50 (64)	36.71 (16.52)
3-in.	150	3.60 (91)	N/A	0.97 (25)	1.30 (33)	3.70 (94)	13.79 (6.21)
	300	3.60 (91)	N/A	0.97 (25)	1.30 (33)	3.70 (94)	17.84 (8.03)
	600	3.60 (91)	N/A	0.97 (25)	1.30 (33)	3.70 (94)	20.31 (9.14)
	900	3.60 (91)	N/A	0.97 (25)	1.30 (33)	3.70 (94)	33.21 (14.94)
	1500	3.60 (91)	N/A	0.97 (25)	1.30 (33)	3.70 (94)	46.76 (21.04)
	2500	3.60 (91)	N/A	0.97 (25)	1.30 (33)	3.70 (94)	81.34 (36.60)
4-in.	150	3.60 (91)	N/A	0.97 (25)	1.30 (33)	3.70 (94)	19.56 (8.80)
	300	3.60 (91)	N/A	0.97 (25)	1.30 (33)	3.70 (94)	29.56 (13.30)
	600	3.60 (91)	N/A	0.97 (25)	1.30 (33)	3.70 (94)	40.73 (18.33)
	900	3.60 (91)	N/A	0.97 (25)	1.30 (33)	3.70 (94)	53.16 (23.92)
	1500	3.60 (91)	N/A	0.97 (25)	1.30 (33)	3.70 (94)	71.72 (32.27)
	2500	3.60 (91)	N/A	0.97 (25)	1.30 (33)	3.70 (94)	125.72 (56.57)
EN1092-1							
DN 50	PN 40	2.40 (61)	N/A	0.97 (25)	1.30 (33)	2.50 (64)	9.02 (4.06)
	PN 63	2.40 (61)	N/A	0.97 (25)	1.30 (33)	2.50 (64)	12.58 (5.66)
	PN 100	2.40 (61)	N/A	0.97 (25)	1.30 (33)	2.50 (64)	15.23 (6.85)
	PN 160	2.40 (61)	N/A	0.97 (25)	1.30 (33)	2.50 (64)	16.12 (7.25)

Table 57: Dimensions for FFW Flush Flanged Raised Face Seals-Two Piece (Upper Housing and Flange) Design *(continued)*

Pipe size	Class	Inner diameter "K" in. (mm)	Beveled edge "L" in. (mm)	Thickness with ¼-NPT F.C. "M" in. (mm)	Thickness with ½-NPT F.C. "M" in. (mm)	Minimum gasket I.D. "N" in. (mm)	Weight lb (kg)
DN 80	PN 40	3.60 (91)	N/A	0.97 (25)	1.30 (33)	3.70 (94)	15.03 (6.76)
	PN 63	3.60 (91)	N/A	0.97 (25)	1.30 (33)	3.70 (94)	18.87 (8.49)
	PN 100	3.60 (91)	N/A	0.97 (25)	1.30 (33)	3.70 (94)	23.34 (10.50)
	PN 160	3.60 (91)	N/A	0.97 (25)	1.30 (33)	3.70 (94)	25.83 (11.62)
DN 100	PN 10/16	3.60 (91)	N/A	0.97 (25)	1.30 (33)	3.70 (94)	16.08 (7.24)
	PN 40	3.60 (91)	N/A	0.97 (25)	1.30 (33)	3.70 (94)	20.31 (9.14)
	PN 63	3.60 (91)	N/A	0.97 (25)	1.30 (33)	3.70 (94)	26.74 (12.03)
	PN 100	3.60 (91)	N/A	0.97 (25)	1.30 (33)	3.70 (94)	34.26 (15.42)
	PN 160	3.60 (91)	N/A	0.97 (25)	1.30 (33)	3.70 (94)	37.44 (16.85)
JIS							
50A	10K	2.12 (54)	N/A	0.97 (25)	1.30 (33)	2.5 (64)	6.93 (3.15)
	20K	2.12 (54)	N/A	0.97 (25)	1.30 (33)	2.5 (64)	7.11 (3.20)
	40K	2.40 (61)	N/A	0.97 (25)	1.30 (33)	2.5 (64)	10.41 (4.68)
80A	10K	3.60 (91)	N/A	0.97 (25)	1.30 (33)	3.70 (94)	10.52 (4.73)
	20K	3.60 (91)	N/A	0.97 (25)	1.30 (33)	3.70 (94)	13.61 (6.12)
	40K	3.60 (91)	N/A	0.97 (25)	1.30 (33)	3.70 (94)	20.08 (9.04)
100 A	10K	3.60 (91)	N/A	0.97 (25)	1.30 (33)	3.70 (94)	14.03 (6.31)
	20K	3.60 (91)	N/A	0.97 (25)	1.30 (33)	3.70 (94)	19.16 (8.62)
	40K	3.60 (91)	N/A	0.97 (25)	1.30 (33)	3.70 (94)	32.12 (14.45)

Figure 32: FFW Flush Flanged Seal - One-Piece Design (Option Code "E", Shown with Flushing Ring)

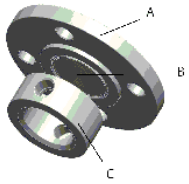

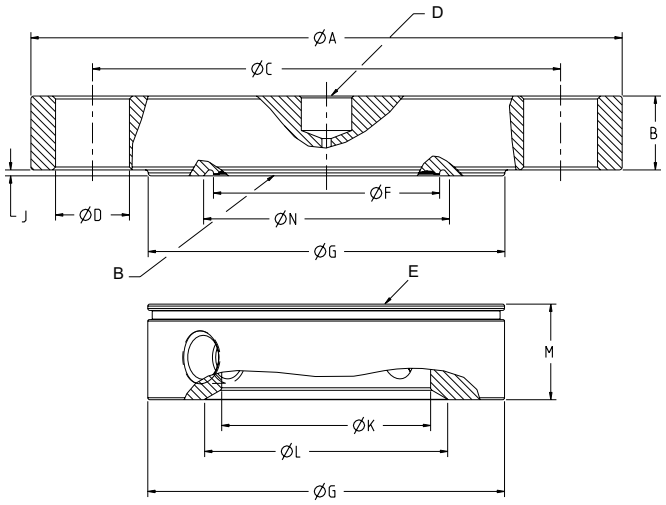

A. Process flange
B. Diaphragm
C. Flushing connection
D. Connection to transmitter
E. Flushing ring

Note
Dimensions are in inches (millimeters).

Table 58: Dimensions for FFW Flush Flanged Seals- One Piece (Upper Housing and Flange) Design (Option Code E)

Pipe size	Class	Flange diameter "A" in. (mm)	Flange thickness "B" in. (mm)	Bolt circle "C" in. (mm)	Number of bolts
ASME					
2-in.	150	6.00 (152)	0.69 (18)	4.75 (121)	4
	300	6.50 (165)	0.81 (21)	5.00 (127)	8
	600	6.50 (165)	1.00 (25)	5.00 (127)	8
	900/1500	8.50 (216)	1.50 (38)	6.50 (165)	8
	2500	9.25 (235)	2.00 (51)	6.75 (172)	8
3-in.	150	7.50 (191)	0.88 (22)	6.00 (152)	4
	300	8.25 (210)	1.06 (27)	6.62 (168)	8
	600	8.25 (210)	1.25 (32)	6.62 (168)	8
	900	9.50 (241)	1.50 (38)	7.50 (229)	8
	1500	10.50 (267)	1.88 (48)	8.00 (203)	8
	2500	12.00 (305)	2.62 (67)	9.00 (229)	8
4-in.	150	9.00 (229)	0.88 (22)	7.50 (191)	8
	300	10.00 (254)	1.19 (30)	7.88 (200)	8
	600	10.75 (273)	1.50 (38)	8.50 (216)	8
	900	11.50 (292)	1.75 (45)	9.25 (235)	8
	1500	12.25 (311)	2.12 (54)	9.50 (241)	8
	2500	14.00 (356)	3.00 (76)	10.75 (274)	8
EN 1092-1					
DN50	PN 40	6.50 (165)	0.67 (17)	4.92 (125)	4
	PN 63	7.08 (180)	0.91 (23)	5.31 (135)	4
	PN 100	7.68 (195)	0.99 (25)	5.71 (145)	4
	PN160	7.68 (195)	1.06 (27)	5.71 (145)	4

Table 58: Dimensions for FFW Flush Flanged Seals- One Piece (Upper Housing and Flange) Design (Option Code E) ***(continued)***

Pipe size	Class	Flange diameter "A" in. (mm)	Flange thickness "B" in. (mm)	Bolt circle "C" in. (mm)	Number of bolts
DN80	PN 40	7.87 (200)	0.83 (21)	6.30 (160)	8
	PN 63	8.46 (215)	0.99 (25)	6.69 (170)	8
	PN 100	9.06 (230)	1.15 (29)	7.09 (180)	8
	PN160	9.06 (230)	1.30 (33)	7.09 (180)	8
DN100	PN 10/16	8.66 (220)	0.67 (17)	7.09 (180)	8
	PN 40	9.25 (235)	0.83 (21)	7.48 (190)	8
	PN 63	9.84 (250)	1.07 (27)	7.87 (200)	8
	PN 100	10.43 (265)	1.30 (33)	8.27 (210)	8
	PN 160	10.43 (265)	1.46 (37)	8.27 (210)	8
JIS					
50A	10K	6.1 (155)	0.63 (16)	4.72 (120)	4
	20K	6.1 (155)	0.71 (18)	4.72 (120)	8
	40K	6.5 (165)	1.02 (26)	5.12 (130)	8
80A	10K	7.28 (185)	0.71 (18)	5.91 (150)	8
	20K	7.87 (200)	0.88 (22)	6.3 (160)	8
	40K	8.27 (210)	1.26 (32)	6.69 (170)	8
100A	10K	8.27 (210)	0.71 (18)	6.89 (175)	8
	20K	8.86 (225)	0.95 (24)	7.28 (185)	8
	40K	9.84 (250)	1.42 (36)	8.07 (205)	8

Pipe size	Class	Bolt hole diameter "D" in. (mm)	Standard diaphragm diameter "F" in. (mm)	Raised face diameter "G" in. (mm)	Raised face height "J" in. (mm)	Minimum gasket I.D. "N" in. (mm)	Weight lb (kg)
ASME							
2-in.	150	0.75 (19)	2.30 (58)	3.62 (92)	0.06 (1.50)	2.5 (64)	7.40 (3.33)
	300	0.75 (19)	2.30 (58)	3.62 (92)	0.06 (1.50)	2.5 (64)	8.99 (4.05)
	600	0.75 (19)	2.30 (58)	3.62 (92)	0.25 (6.40)	2.5 (64)	10.44 (4.70)
	900/1500	1.00 (25)	2.30 (58)	3.62 (92)	0.25 (6.40)	2.5 (64)	24.62 (11.08)
	2500	1.13 (29)	2.30 (58)	3.62 (92)	0.25 (6.40)	2.5 (64)	36.71 (16.52)
3-in.	150	1.13 (25)	3.50 (89)	5.00 (127)	0.06 (1.50)	3.70 (94)	13.79 (6.21)
	300	0.88 (22)	3.50 (89)	5.00 (127)	0.06 (1.50)	3.70 (94)	17.84 (8.03)
	600	0.88 (22)	3.50 (89)	5.00 (127)	0.25 (6.40)	3.70 (94)	20.31 (9.14)
	900	1.00 (25)	3.50 (89)	5.00 (127)	0.25 (6.40)	3.70 (94)	33.21 (14.94)
	1500	1.25 (32)	3.50 (89)	5.00 (127)	0.25 (6.40)	3.70 (94)	46.76 (21.04)
	2500	1.38 (35)	3.50 (89)	5.00 (127)	0.25 (6.40)	3.70 (94)	81.34 (36.60)
4-in.	150	0.75 (19)	3.50 (89)	6.20 (157)	0.06 (1.50)	3.70 (94)	19.56 (8.80)

Pipe size	Class	Bolt hole diameter "D" in. (mm)	Standard diaphragm diameter "F" in. (mm)	Raised face diameter "G" in. (mm)	Raised face height "J" in. (mm)	Minimum gasket I.D. "N" in. (mm)	Weight lb (kg)
	300	0.88 (22)	3.50 (89)	6.20 (157)	0.06 (1.50)	3.70 (94)	29.56 (8.80)
	600	1.00 (25)	3.50 (89)	6.20 (157)	0.25 (6.40)	3.70 (94)	40.73 (18.33)
	900	1.25 (32)	3.50 (89)	6.20 (157)	0.25 (6.40)	3.70 (94)	53.16 (23.92)
	1500	1.38 (35)	3.50 (89)	6.20 (157)	0.25 (6.40)	3.70 (94)	71.72 (32.27)
	2500	1.63 (41)	3.50 (89)	6.20 (157)	0.25 (6.40)	3.70 (94)	125.72 (56.57)
EN 1092-1							
DN50	PN 40	0.71 (18)	2.30 (58)	4.00 (102)	0.12 (3.00)	2.50 (64)	9.02 (4.06)
	PN 63	0.88 (22)	2.30 (58)	4.00 (102)	0.12 (3.00)	2.50 (64)	12.58 (5.66)
	PN 100	1.02 (26)	2.30 (58)	4.00 (102)	0.12 (3.00)	2.50 (64)	15.23 (6.85)
	PN160	1.02 (26)	2.30 (58)	4.00 (102)	0.12 (3.00)	2.50 (64)	16.12 (7.25)
DN80	PN 40	0.71 (18)	3.50 (89)	5.43 (138)	0.12 (3.0)	3.70 (94)	15.03 (6.76)
	PN 63	0.88 (22)	3.50 (89)	5.43 (138)	0.12 (3.0)	3.70 (94)	18.87 (8.49)
	PN 100	1.02 (26)	3.50 (89)	5.43 (138)	0.12 (3.0)	3.70 (94)	23.34 (10.50)
	PN160	1.02 (26)	3.50 (89)	5.43 (138)	0.12 (3.0)	3.70 (94)	25.83 (11.62)
DN100	PN 10/16	0.71 (18)	3.50 (89)	6.20 (157)	0.12 (3.0)	3.70 (94)	16.08 (7.24)
	PN 40	0.88 (22)	3.50 (89)	6.20 (157)	0.12 (3.0)	3.70 (94)	20.31 (9.14)
	PN 63	1.02 (26)	3.50 (89)	6.20 (157)	0.12 (3.0)	3.70 (94)	26.74 (12.03)
	PN 100	1.18 (30)	3.50 (89)	6.20 (157)	0.12 (3.0)	3.70 (94)	34.26 (15.42)
	PN 160	1.18 (30)	3.50 (89)	6.20 (157)	0.12 (3.0)	3.70 (94)	37.44 (16.85)
JIS							
50A	10K	0.75 (19)	2.30 (58)	3.62 (92)	0.08 (2.0)	2.50 (64)	6.93 (3.15)
	20K	0.75 (19)	2.30 (58)	3.62 (92)	0.08 (2.0)	2.50 (64)	7.11 (3.20)
	40K	0.75 (19)	2.30 (58)	4.00 (102)	0.08 (2.0)	2.50 (64)	10.41 (4.68)
80A	10K	0.75 (19)	3.50 (89)	5.00 (127)	0.08 (2.0)	3.70 (94)	10.52 (4.73)
	20K	0.91 (23)	3.50 (89)	5.00 (127)	0.08 (2.0)	3.70 (94)	13.61 (6.12)
	40K	0.91 (23)	3.50 (89)	5.43 (138)	0.08 (2.0)	3.70 (94)	20.08 (9.04)
100A	10K	0.75 (19)	3.50 (89)	6.20 (157)	0.08 (2.0)	3.70 (94)	14.03 (6.31)
	20K	0.91 (23)	3.50 (89)	6.20 (157)	0.08 (2.0)	3.70 (94)	19.16 (8.62)
	40K	0.98 (25)	3.50 (89)	6.20 (157)	0.08 (2.0)	3.70 (94)	32.12 (14.45)

Figure 33: FFW Flush Flanged Seal - Flushing Connection Ring (Lower Housing)

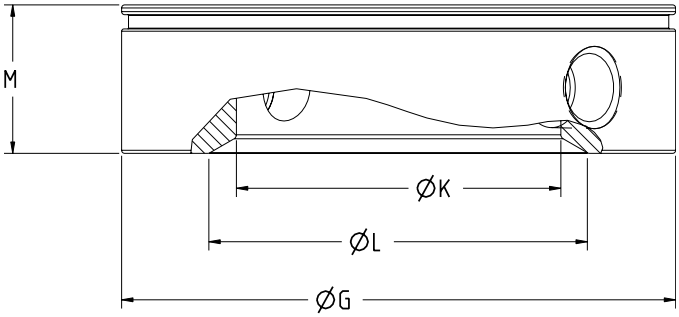

Table 59: Dimensions for FFW Flushing Connection Ring (Lower Housing)

Pipe size	Class	Raised face diameter "G" in. (mm)	Inner diameter "K" in. (mm)	Beveled edge "L" in. (mm)	Thickness with ¼-NPT F.C. "M" in. (mm)	Thickness with ½-NPT F.C. "M" in. (mm)	Weight lb (kg)
ASME							
2-in.	150	3.62 (92)	2.12 (54)	2.48 (63)	0.97 (25)	1.30 (33)	1.85 (0.83)
	300	3.62 (92)	2.12 (54)	2.48 (63)	0.97 (25)	1.30 (33)	1.85 (0.83)
	600	3.62 (92)	2.12 (54)	2.48 (63)	0.97 (25)	1.30 (33)	1.85 (0.83)
	900/1500	3.62 (92)	2.12 (54)	2.48 (63)	0.97 (25)	1.30 (33)	1.85 (0.83)
	2500	3.62 (92)	2.12 (54)	2.48 (63)	0.97 (25)	1.30 (33)	1.85 (0.83)
3-in.	150	5.00 (127)	3.60 (91)	N/A	0.97 (25)	1.30 (33)	2.63 (1.18)
	300	5.00 (127)	3.60 (91)	N/A	0.97 (25)	1.30 (33)	2.63 (1.18)
	600	5.00 (127)	3.60 (91)	N/A	0.97 (25)	1.30 (33)	2.63 (1.18)
	900	5.00 (127)	3.60 (91)	N/A	0.97 (25)	1.30 (33)	2.63 (1.18)
	1500	5.00 (127)	3.60 (91)	N/A	0.97 (25)	1.30 (33)	2.63 (1.18)
	2500	5.00 (127)	3.60 (91)	N/A	0.97 (25)	1.30 (33)	2.63 (1.18)
4-in.	150	6.20 (157)	3.60 (91)	N/A	0.97 (25)	1.30 (33)	5.60 (2.52)
	300	6.20 (157)	3.60 (91)	N/A	0.97 (25)	1.30 (33)	5.60 (2.52)
	600	6.20 (157)	3.60 (91)	N/A	0.97 (25)	1.30 (33)	5.60 (2.52)
	900	6.20 (157)	3.60 (91)	N/A	0.97 (25)	1.30 (33)	5.60 (2.52)
	1500	6.20 (157)	3.60 (91)	N/A	0.97 (25)	1.30 (33)	5.60 (2.52)

Table 59: Dimensions for FFW Flushing Connection Ring (Lower Housing) *(continued)*

Pipe size	Class	Raised face diameter "G" in. (mm)	Inner diameter "K" in. (mm)	Beveled edge "L" in. (mm)	Thickness with ¼-NPT F.C. "M" in. (mm)	Thickness with ½-NPT F.C. "M" in. (mm)	Weight lb (kg)
	2500	6.20 (157)	3.60 (91)	N/A	0.97 (25)	1.30 (33)	5.60 (2.52)
EN1092-1							
DN 50	PN 40	4.00 (102)	2.40 (61)	N/A	0.97 (25)	1.30 (33)	2.24 (1.01)
	PN 63	4.00 (102)	2.40 (61)	N/A	0.97 (25)	1.30 (33)	2.24 (1.01)
	PN 100	4.00 (102)	2.40 (61)	N/A	0.97 (25)	1.30 (33)	2.24 (1.01)
	PN 160	4.00 (102)	2.40 (61)	N/A	0.97 (25)	1.30 (33)	2.24 (1.01)
DN 80	PN 40	5.43 (138)	3.60 (91)	N/A	0.97 (25)	1.30 (33)	3.62 (1.63)
	PN 63	5.43 (138)	3.60 (91)	N/A	0.97 (25)	1.30 (33)	3.62 (1.63)
	PN 100	5.43 (138)	3.60 (91)	N/A	0.97 (25)	1.30 (33)	3.62 (1.63)
	PN 160	5.43 (138)	3.60 (91)	N/A	0.97 (25)	1.30 (33)	3.62 (1.63)
DN 100	PN 10/16	6.20 (157)	3.60 (91)	N/A	0.97 (25)	1.30 (33)	5.60 (2.52)
	PN 40	6.20 (157)	3.60 (91)	N/A	0.97 (25)	1.30 (33)	5.60 (2.52)
	PN 63	6.20 (157)	3.60 (91)	N/A	0.97 (25)	1.30 (33)	5.60 (2.52)
	PN 100	6.20 (157)	3.60 (91)	N/A	0.97 (25)	1.30 (33)	5.60 (2.52)
	PN 160	6.20 (157)	3.60 (91)	N/A	0.97 (25)	1.30 (33)	5.60 (2.52)
JIS							
50A	10K	3.62 (92)	2.12 (54)	N/A	0.97 (25)	1.30 (33)	1.85 (0.83)
	20K	3.62 (92)	2.12 (54)	N/A	0.97 (25)	1.30 (33)	1.85 (0.83)
	40K	4.00 (102)	2.40 (61)	N/A	0.97 (25)	1.30 (33)	1.85 (0.83)
80A	10K	5.00 (127)	3.60 (91)	N/A	0.97 (25)	1.30 (33)	2.63 (1.18)
	20K	5.00 (127)	3.60 (91)	N/A	0.97 (25)	1.30 (33)	2.63 (1.18)
	40K	5.43 (138)	3.60 (91)	N/A	0.97 (25)	1.30 (33)	2.63 (1.18)
100A	10K	6.20 (157)	3.60 (91)	N/A	0.97 (25)	1.30 (33)	5.60 (2.52)

Table 59: Dimensions for FFW Flushing Connection Ring (Lower Housing) *(continued)*

Pipe size	Class	Raised face diameter "G" in. (mm)	Inner diameter "K" in. (mm)	Beveled edge "L" in. (mm)	Thickness with ¼-NPT F.C. "M" in. (mm)	Thickness with ½-NPT F.C. "M" in. (mm)	Weight lb (kg)
	20K	6.20 (157)	3.60 (91)	N/A	0.97 (25)	1.30 (33)	5.60 (2.52)
	40K	6.20 (157)	3.60 (91)	N/A	0.97 (25)	1.30 (33)	5.60 (2.52)

Figure 34: RFW Flanged Seal Standard Design

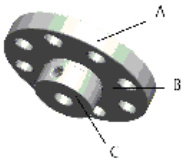

A. Process flange
B. Diaphragm
C. Lower housing or flushing connection
D. Connection to transmitter

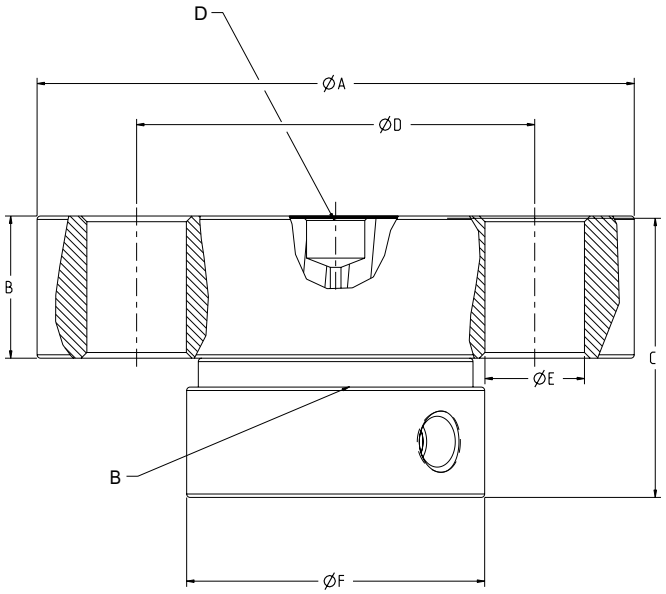

Note
Dimensions are in inches (millimeters).

Table 60: RFW Flanged Seal Standard Design Dimensions

Lower housing is loose on standard design, consult factory for retained lower housing options.

Pipe size	Class	Flange diameter "A" in. (mm)	Flange thickness "B" in. (mm)	Overall height "C" in. (mm)		Bolt circle diameter "D" in. (mm)	Bolt hole diameter "E" in. (mm)	Lower housing diameter "F" in. (mm)	Weight lb (kg)	
				No or ¼-in. NPT flush connection	½-in. NPT flush connection				No or ¼-in. NPT flush connection	½-in. NPT flush connection
ASME										
½-in.	2500	5.25 (133.4)	1.25 (31.8)	3.28 (783.3)	3.64 (92.5)	3.50 (88.9)	0.88 (22.4)	2.62 (66.5)	9.26 (4.20)	9.63 (4.37
¾-in.	300	4.62 (117.3)	0.62 (15.7)	2.63 (66.8)	2.99 (75.9)	3.25 (83)	0.75 (19.1	2.62 (66.5)	4.95 (2.25)	5.32 (2.41)
	600	4.62 (117.3)	0.68 (17.3)	2.63 (66.8)	2.99 (75.9)	3.25 (82.6)	0.75 (19.1	2.62 (66.5)	5.15 (2.34)	5.52 (2.51)

Table 60: RFW Flanged Seal Standard Design Dimensions *(continued)*

Pipe size	Class	Flange diameter "A" in. (mm)	Flange thickness "B" in. (mm)	Overall height "C" in. (mm)		Bolt circle diameter "D" in. (mm)	Bolt hole diameter "E" in. (mm)	Lower housing diameter "F" in. (mm)	Weight lb (kg)	
				No or ¼-in. NPT flush connection	½-in. NPT flush connection				No or ¼-in. NPT flush connection	½-in. NPT flush connection
	900/1500	5.12 (130)	1.06 (26.9)	3.28 (83.3)	3.64 (92.5)	3.50 (88.9)	0.88 (22.4)	2.62 (66.5)	8.01 (3.63)	8.38 (3.80)
	2500	5.50 (139.7)	1.31 (33.3)	3.28 (83.3)	3.64 (92.5)	3.75 (95)	0.88 (22.4)	2.62 (66.5)	10.28 (4.66)	10.65 (4.83)
1-in.	150	4.25 (108)	0.56 (14.2)	2.63 (66.8)	2.99 (75.9)	3.12 (79.2)	0.63 (16)	2.62 (66.5)	4.34 (1.97)	4.69 (2.13)
	300	4.88 (124)	0.68 (17.3)	2.63 (66.8)	2.99 (75.9)	3.50 (88.9)	0.75 (19.1)	2.62 (66.5)	5.45 (2.47)	5.81 (12.64)
	600	4.88 (124)	0.75 (19.1)	2.63 (66.8)	2.99 (75.9)	3.50 (88.9)	0.75 (19.1)	2.62 (66.5)	5.73 (2.60)	6.08 (2.76)
	900/1500	5.88 (149.4)	1.18 (30.0)	3.28 (83.3)	3.64 (92.5)	4.00 (101.6)	1.00 (25.4)	2.62 (66.5)	10.43 (4.73)	10.43 (4.73)
	2500	6.25 (158.8)	1.44 (36.6)	3.28 (83.3)	3.64 (92.5)	4.25 (108)	1.00 (25.4)	2.62 (66.5)	13.44 (6.10)	13.8 (6.26)
1½-in.	150	5.00 (127)	0.68 (17.3)	2.63 (66.8)	2.99 (75.9)	3.88 (98.6)	0.63 (16)	2.88 (73.2)	5.83 (2.65)	6.20 (2.81)
	300	6.12 (155.4)	0.81 (20.6)	2.63 (66.8)	2.99 (75.9)	4.50 (114.3)	0.88 (22.4)	2.88 (73.2)	8.40 (3.81)	8.78 (3.98)
	600	6.12 (155.4)	0.94 (23.9)	2.63 (66.8)	2.99 (75.9)	4.50 (114.3)	0.88 (22.4)	2.88 (73.2)	9.29 (4.22)	9.66 (4.38)
	900/1500	7.00 (177.8)	1.31 (33.3)	3.28 (83.3)	3.64 (92.5)	4.88 (124)	1.13 (28.7)	2.88 (73.2)	14.65 (6.65)	15.02 (6.81)
EN 1092-1										
DN20	PN63/PN 100	5.12 (130)	0.87 (22.1)	2.63 (66.8)	2.99 (75.9)	3.54 (89.9)	0.71 (18.0)	2.68 (68.1)	6.87 (3.11)	7.26 (3.29)
DN25	PN16/PN40	4.53 (115.1)	0.71 (18)	2.63 (66.8)	2.99 (75.9)	3.35 (85.1)	0.55 (14)	2.68 (68.1)	5.27 (2.39)	5.64 (2.56)
	PN63/PN100/PN160	5.51 (140.0)	0.94 (23.9)	2.63 (66.8)	2.99 (75.9)	3.94 (100.1)	0.71 (18.0)	2.68 (68.1)	7.97 (3.62)	8.34 (3.78)
DN40	PN16/PN40	5.91 (150.1)	0.71 (18)	2.63 (66.8)	2.99 (75.9)	4.33 (110)	0.71 (18)	3.46 (87.9)	7.45 (3.38)	7.82 (3.55)
	PN63/PN100	6.69 (169.9)	1.02 (25.9)	2.63 (66.8)	2.99 (75.9)	4.92 (125)	0.87 (22.1)	3.46 (87.9)	7.45 (3.38)	11.87 (5.38)
	PN160			2.63 (66.8)	2.99 (75.9)	4.92 (125)	0.87 (22.1)	3.46 (87.9)	12.18 (5.53)	12.55 (5.69)
JIS 2220										
40A	10K	5.51 (140)	0.65 (16)	2.63 (66.8)	2.99 (75.9)	4.13 (104.9)	0.75 (19.1)	3.15 (80.0)	6.59 (2.99)	7.01 (3.18)
	20K	5.51 (140)	0.73 (18.5)	2.63 (66.8)	2.99 (75.9)	4.13 (104.9)	0.75 (19.1)	3.15 (80.0)	7.02 (3.19)	7.44 (3.37)

Table 60: RFW Flanged Seal Standard Design Dimensions *(continued)*

Pipe size	Class	Flange diameter "A" in. (mm)	Flange thickness "B" in. (mm)	Overall height "C" in. (mm)		Bolt circle diameter "D" in. (mm)	Bolt hole diameter "E" in. (mm)	Lower housing diameter "F" in. (mm)	Weight lb (kg)	
				No or ¼-in. NPT flush connection	½-in. NPT flush connection				No or ¼-in. NPT flush connection	½-in. NPT flush connection
	40K	6.30 (160)	0.97 (24.6)	2.63 (66.8)	2.99 (75.9)	4.72 (119.9)	0.91 (23.1)	3.15 (80.0)	10.14 (4.60)	10.55 (4.79)

Figure 35: RFW Flanged Seal Stud Bolt Design



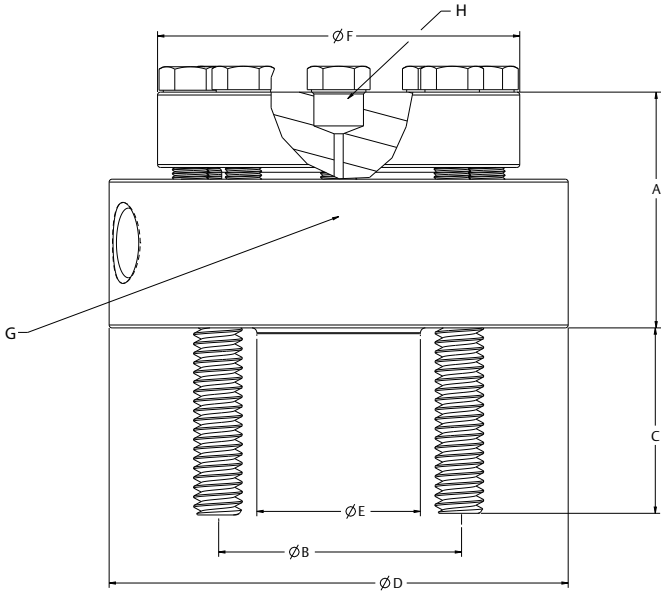

A. Overall height
B. Stud circle diameter
C. Stud (Protuding Length)
D. Lower housing diameter
E. Raised face diameter
F. Upper diameter
G. Diaphragm
H. Connection to transmitter

Note
Dimensions are in inches (millimeters).

Table 61: RFW Flanged Seal Stud Bolt Design Dimensions

Pipe size	Class	Overall height "A" in. (mm)		Stud circle diameter "B" in. (mm)	Stud (size, length) "C" in. (mm)	Lower housing diameter "D" in. (mm)	Raised face diameter "E" in. (mm)	Upper diameter "F" in. (mm)	Weight lb (kg)	
		No or ¼-in. NPT flush connection	½-in. NPT flush connection						No or ¼-in. NPT flush connection	½-in. NPT flush connection
ASME										
½-in.	150	2.11 (53.6)	2.47 (62.7)	2.38 (60.5)	1.94 (49.3)	3.74 (95)	1.38 (35.1)	3.74 (95)	6.20 (2.81)	10.01 (4.55)
	300	2.17 (70)	2.47 (62.7)	2.62 (66.5)	1.94 (49.3)	3.74 (95)	1.38 (35.1)	3.74 (95)	6.37 (2.89)	10.01 (4.55)
	600	2.37 (60.2)	2.52 (64)	2.62 (66.5)	1.75 (44.5)	3.74 (95)	1.38 (35.1)	3.74 (95)	6.46 (2.93)	9.41 (4.27)

Table 61: RFW Flanged Seal Stud Bolt Design Dimensions *(continued)*

Pipe size	Class	Overall height "A" in. (mm)		Stud circle diameter "B" in. (mm)	Stud (size, length) "C" in. (mm)	Lower housing diameter "D" in. (mm)	Raised face diameter "E" in. (mm)	Upper diameter "F" in. (mm)	Weight lb (kg)	
		No or ¼-in. NPT flush connection	½-in. NPT flush connection						No or ¼-in. NPT flush connection	½-in. NPT flush connection
	900/1500	2.79 (70.9)	3.29 (83.6)	3.25 (82.6)	2.99 (75.9	4.74 (120.4)	1.38 (35.1)	4.00 (101.6)	11.70 (5.31)	14.94 (6.78)
¾-in.	150	2.11 (53.6)	2.47 (62.7)	2.75 (69.9)	1.94 (49.3)	3.88 (98.6)	1.69 (42.9)	3.74 (95.0)	6.43 (2.92)	9.96 (4.52)
EN 1092-1										
DN 10	PN 40	2.11 (53.6)	2.47 (62.7)	2.36 (59.9)	1.80 (45.7)	3.74 (95)	1.57 (39.9)	3.74 (95.0)	6.12 (2.78)	10.00 (4.54)
	PN 63/100	2.11 (53.6)	2.47 (62.7)	2.76 (70.1)	1.80 (45.7)	3.74 (95)	1.57 (39.9)	3.74 (95.0)	6.51 (2.96)	9.92 (4.50)
DN 15	PN 40	2.11 (53.6)	2.47 (62.7)	2.56 (65.0)	1.80 (45.7)	3.74 (95)	1.77 (45)	3.74 (95.0)	6.10 (2.77)	9.88 (4.48)
	PN 63/100	2.11 (53.6)	2.47 (62.7)	2.95 (74.9)	1.80 (45.7)	4.13 (104.9)	1.77 (45)	3.74 (95.0)	6.87 (3.12)	9.88 (4.48)
JIS										
20A	10/20K	2.11 (53.6)	2.47 (62.7)	2.95 (74.9)	1.84 (46.7)	4.13 (104.9)	2.28 (57.9)	3.74 (95.0)	6.56 (2.98)	10.00 (4.54)

Figure 36: EFW Extended Flanged Seal - Extended Flanged Assembly

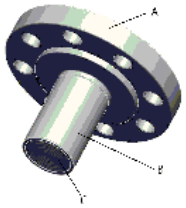

A. Process flange
B. Extension
C. Diaphragm
D. Connection to transmitter
E. Extension length

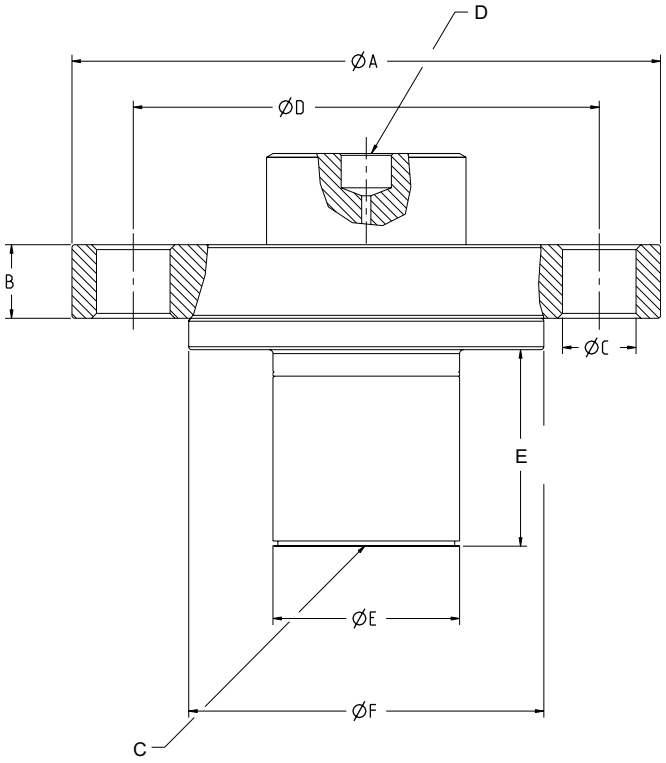

Table 62: EFW Extended Flanged Seal Dimensions

Pipe size	Class	Flange diameter "A" in. (mm)	Flange thickness "B" in. (mm)	Bolt circle "C" in. (mm)	Number of bolts	Bolt hole diameter "D" in. (mm)	Raised face diameter "F" in. (mm)
ASME							
1½-in.	150	5.00 (127)	0.62 (16)	0.63 (16)	4	3.88 (99)	2.88 (73)
	300	6.12 (156)	0.75 (19)	0.88 (22)	4	4.50 (114)	2.88 (73)
	600	6.12 (156)	0.88 (22)	0.88 (22)	4	4.50 (114)	2.88 (73)
	900/1500	7.00 (178)	1.25 (32)	1.13 (28)	4	4.88 (124)	2.88 (73)
	2500	8.00 (203)	1.75 (45)	1.25 (32)	4	5.75 (146)	2.88 (73)
2-in.	150	6.00 (152)	0.69 (18)	0.75 (19)	4	4.75 (121)	3.62 (92)
	300	6.50 (165)	0.82 (21)	0.75(19)	8	5.00 (127)	3.62 (92)
	600	6.50 (165)	1.00 (25)	0.75 (19)	8	5.00 (127)	3.62 (92)
	900/1500	8.50 (216)	1.50 (38)	1.00 (25)	8	6.50 (165)	3.62 (92)
	2500	9.25 (235)	2.00 (51)	1.13 (29)	8	6.75 (172)	3.62 (92)
3-in.	150	7.50 (191)	0.88 (22)	0.75 (19)	4	6.00 (152)	5.00 (127)
	300	8.25 (210)	1.06 (27)	0.88 (22)	8	6.62 (168)	5.00 (127)
	600	8.25 (210)	1.25 (32)	0.88 (22)	8	6.62 (168)	5.00 (127)
	900	9.50 (241)	1.50 (38)	1.00 (25)	8	7.50 (191)	5.00 (127)
	1500	10.50 (267)	1.88 (48)	1.25(32)	8	8.00 (203)	5.00 (127)
	2500	12.00 (305)	2.62 (67)	1.38 (35)	8	9.00 (229)	5.00 (127)
4-in.	150	9.00 (229)	0.88 (22)	0.75 (19)	8	7.50 (191)	6.20 (158)
	300	10.00 (254)	1.19 (30)	0.88 (22)	8	7.88 (200)	6.20 (158)
	600	10.75 (273)	1.50 (38)	1.00 (25)	8	8.50 (216)	6.20 (158)
	900	11.50 (292)	1.75 (45)	1.25 (32)	8	9.25 (235)	6.20 (158)
	1500	12.25 (311)	2.12 (54)	1.38 (35)	8	9.50 (241)	6.20 (158)
	2500	14.00 (356)	3.00 (76)	1.63 (41)	8	10.75 (274)	6.20 (158)
EN 1092-1							
DN 50	PN 40	6.50 (165)	0.67 (17)	0.71 (18)	4	4.92 (125)	4.02 (102)
	PN 63	7.08 (180)	0.91 (23)	0.88 (22)	4	5.31 (135)	4.02 (102)
	PN 100	7.68 (195)	0.98 (25)	1.02 (26)	4	5.71 (145)	4.02 (102)
	PN 160	7.68 (195)	1.06 (27)	1.02 (26)	4	5.71 (145)	4.02 (102)
DN 80	PN 40	7.87 (200)	0.83 (21)	0.71 (18)	8	6.30 (160)	5.43 (138)
	PN 63	8.46 (215)	0.98 (25)	0.88 (22)	8	6.69 (170)	5.43 (138)
	PN 100	9.06 (230)	1.14 (29)	1.02 (26)	8	7.09 (180)	5.43 (138)
	PN 160	9.06 (230)	1.30 (33)	1.02 (26)	8	7.09 (180)	5.43 (138)
DN 100	PN 10/16	8.66 (220)	0.67 (17)	0.71 (18)	8	7.09 (180)	6.20 (158)
	PN 40	9.25 (235)	0.83 (21)	0.88 (22)	8	7.48 (190)	6.20 (158)
	PN 63	9.84 (250)	1.06 (27)	1.02 (26)	8	7.87 (200)	6.20 (158)
	PN 100	10.43 (265)	1.30 (33)	1.18 (30)	8	8.27 (210)	6.20 (158)

Table 62: EFW Extended Flanged Seal Dimensions *(continued)*

Pipe size	Class	Flange diameter "A" in. (mm)	Flange thickness "B" in. (mm)	Bolt circle "C" in. (mm)	Number of bolts	Bolt hole diameter "D" in. (mm)	Raised face diameter "F" in. (mm)
	PN 160	10.43 (265)	1.46 (37)	1.18 (30)	8	8.27 (210)	6.20 (158)
JIS							
50A	10K	6.10 (155)	0.63 (16)	0.75 (19)	4	4.72 (120)	3.62 (92)
	20K	6.10 (155)	0.71 (18)	0.75 (19)	8	4.72 (120)	3.62 (92)
	40K	6.50 (165)	1.02 (26)	0.75 (19)	8	5.12 (130)	4.00 (102)
80A	10K	7.28 (185)	0.71 (18)	0.75 (19)	8	5.91 (150)	5.00 (127)
	20K	7.87 (200)	0.88 (22)	0.91 (23)	8	6.30 (160)	5.00 (127)
	40K	8.27 (210)	1.26 (32)	0.91 (23)	8	6.69 (170)	5.43 (138)
100A	10K	8.27 (210)	0.71 (18)	0.75 (19)	8	6.89 (175)	6.20 (158)
	20K	8.86 (225)	0.94 (24)	0.91 (23)	8	7.28 (185)	6.20 (158)
	40K	9.84 (250)	1.42 (36)	0.98 (25)	8	8.07 (205)	6.20 (158)

Table 63: EFW Extended Flanged Seal Dimensions

Process connection size			Diameter "E" in. (mm)
ASME B16.5	EN 1092-1	JIS B2238	
3-in.	DN 80	80A	2.58 (66)
4-in.	DN 100	100A	3.50 (89)
1½-in.	DN 40	40A	1.45 (37)
2-in.	DN 50	50A	1.90 (48)
3-in.	DN 80 Headbox	N/A	2.88 (73)
4-in. Headbox	DN100 Headbox	N/A	3.78 (96)

Table 64: EFW Extended Flanged Seal Weights in Pounds (Kilograms)

Pipe size	Class	Extension length								
		1-in. (25 mm)	2-in. (51 mm)	3-in. (76 mm)	4-in. (102 mm)	5-in. (127 mm)	6-in. (152 mm)	7-in. (178 mm)	8-in. (203 mm)	9-in. (229 mm)
ASME										
1½-in.	150	5.53 (2.49)	5.99 (2.70)	6.46 (2.91)	6.92 (3.11)	7.38 (3.32)	7.85 (3.53)	8.31 (3.74)	8.78 (3.95)	7.47 (3.36)
	300	8.11 (3.65)	8.57 (3.86)	9.04 (4.07)	9.50 (4.28)	9.96 (4.48)	10.43 (4.69)	10.89 (4.90)	11.36 (5.11)	10.05 (4.52)
	600	9.00 (4.05)	9.46 (4.56)	9.93 (4.47)	10.39 (4.68)	10.86 (4.89)	11.32 (5.09)	11.78 (5.30)	12.25 (5.51)	10.94 (4.92)
	900/1500	15.19 (6.86)	15.66 (7.05)	16.12 (7.25)	16.59 (7.47)	17.05 (7.67)	17.51 (7.88)	17.98 (8.09)	18.44 (8.30)	18.70 (8.42)
	2500	25.38 (11.42)	25.84 (11.63)	26.31 (11.84)	26.77 (12.05)	27.23 (12.25)	27.70 (12.47)	28.16 (12.67)	28.63 (12.88)	28.89 (13.00)
ASME										

Table 64: EFW Extended Flanged Seal Weights in Pounds (Kilograms) *(continued)*

Pipe size	Class	Extension length								
		1-in. (25 mm)	2-in. (51 mm)	3-in. (76 mm)	4-in. (102 mm)	5-in. (127 mm)	6-in. (152 mm)	7-in. (178 mm)	8-in. (203 mm)	9-in. (229 mm)
2-in.	150	8.22 (3.70)	8.80 (3.96)	9.41 (4.23)	10.00 (4.50)	10.60 (4.77)	11.19 (5.04)	11.79 (5.31)	12.38 (5.57)	11.16 (5.02)
	300	9.81 (4.41)	10.39 (4.68)	11.00 (4.95)	11.60 (5.22)	12.19 (5.49)	12.79 (5.76)	13.38 (6.02)	13.98 (6.29)	12.75 (5.74)
	600	11.26 (5.07)	11.84 (5.33)	12.44 (5.60)	13.05 (5.87)	13.64 (6.14)	14.23 (6.40)	14.83 (6.67)	15.42 (6.94)	14.20 (6.39)
	900/1500	25.50 (11.48)	26.31 (11.84)	27.12 (12.20)	27.92 (12.56)	28.73 (12.93)	29.54 (13.29)	30.34 (13.65)	31.15 (14.02)	31.32 (14.09)
	2500	36.58 (16.46)	37.38 (16.82)	38.19 (17.19)	39.00 (17.55)	39.80 (17.91)	40.61 (18.27)	41.42 (18.64)	42.22 (19.00)	42.40 (19.08)
3-in.	150	15.89 (7.15)	17.64 (7.94)	19.48 (8.77)	21.27 (9.57)	23.08 (10.39)	24.88 (11.20)	26.69 (12.01)	28.50 (12.83)	22.47 (10.11)
	300	19.94 (8.97)	21.69 (9.76)	23.53 (10.59)	25.32 (11.39)	27.13 (12.21)	28.93 (13.02)	30.74 (13.83)	32.54 (14.64)	26.52 (11.93)
	600	22.43 (10.09)	24.18 (10.88)	26.02 (11.71)	27.81 (12.51)	29.62 (13.33)	31.42 (14.14)	33.23 (14.95)	35.03 (15.76)	29.01 (13.05)
	900	33.26 (14.97)	35.10 (15.80)	36.90 (16.61)	38.71 (17.42)	40.51 (18.23)	42.32 (19.04)	44.12 (19.85)	45.93 (20.67)	48.80 (21.96)
	1500	47.88 (21.55)	49.71 (22.37)	51.52 (23.18)	53.33 (24.00)	55.13 (24.81)	56.94 (25.62)	58.74 (26.43)	60.55 (27.25)	63.42 (28.54)
	2500	83.46 (37.56)	85.30 (38.39)	87.10 (39.20)	88.91 (40.01)	90.71 (40.82)	92.52 (41.63)	94.33 (42.45)	96.13 (43.26)	99.00 (44.55)
3-in. Headbox	150	15.76 (7.09)	17.40 (7.83)	19.07 (8.58)	20.90 (9.41)	22.40 (10.08)	24.07 (10.83)	25.74 (11.58)	27.41 (12.33)	23.24 (10.46)
	300	19.81 (8.91)	21.45 (9.65)	23.12 (10.40)	24.95 (11.23)	26.45 (11.90)	28.12 (12.65)	29.79 (13.41)	31.45 (14.15)	27.29 (12.28)
	600	22.30 (10.04)	23.94 (10.77)	25.61 (11.52)	27.44 (12.35)	28.94 (13.02)	30.61 (13.77)	32.28 (14.53)	33.94 (15.27)	29.78 (13.40)
	900	33.13 (14.91)	34.83 (15.67)	36.50 (16.53)	38.17 (17.18)	39.84 (17.93)	41.51 (18.68)	43.15 (19.42)	44.85 (20.18)	47.58 (21.41)
	1500	47.75 (21.49)	49.45 (22.25)	51.12 (23.00)	52.79 (23.76)	54.46 (24.51)	56.13 (25.26)	57.76 (25.99)	59.46 (26.76)	62.20 (27.99)
	2500	83.33 (37.50)	85.03 (38.26)	86.70 (39.02)	88.37 (39.77)	90.04 (40.52)	91.71 (41.27)	93.35 (42.01)	95.05 (42.77)	97.78 (44.00)
4-in.	150	28.61 (12.87)	39.17 (17.63)	49.62 (22.33)	60.07 (27.03)	70.52 (31.73)	80.94 (36.42)	91.42 (41.14)	101.88 (45.85)	31.74 (14.28)
	300	38.62 (17.38)	49.18 (22.13)	59.63 (26.83)	70.08 (31.54)	80.54 (36.24)	90.96 (40.93)	101.44 (45.65)	111.89 (50.35)	41.75 (18.79)
	600	48.37 (21.77)	58.93 (26.52)	69.38 (31.22)	79.83 (35.92)	90.28 (40.63)	100.70 (45.32)	111.19 (50.04)	121.64 (54.74)	51.50 (23.18)
	900	55.27 (24.87)	58.50 (26.33)	61.73 (27.78)	64.96 (29.23)	67.31 (30.29)	70.34 (31.65)	73.36 (33.01)	76.38 (34.37)	80.30 (36.14)

Table 64: EFW Extended Flanged Seal Weights in Pounds (Kilograms) *(continued)*

Pipe size	Class	Extension length								
		1-in. (25 mm)	2-in. (51 mm)	3-in. (76 mm)	4-in. (102 mm)	5-in. (127 mm)	6-in. (152 mm)	7-in. (178 mm)	8-in. (203 mm)	9-in. (229 mm)
	1500	72.28 (32.53)	75.51 (33.98)	78.74 (35.43)	81.97 (36.89)	84.33 (37.95)	87.35 (39.31)	90.37 (40.67)	93.39 (42.03)	97.31 (43.79)
	2500	126.52 (56.93)	129.75 (58.39)	132.98 (59.84)	136.20 (61.29)	138.57 (62.36)	141.59 (63.72)	144.61 (65.07)	147.63 (66.43)	151.55 (68.20)
4-in. Headbox	150	22.84 (10.28)	25.85 (11.63)	28.90 (13.01)	31.99 (14.40)	35.00 (15.75)	38.06 (17.13)	41.11 (18.50)	44.13 (19.86)	32.00 (14.40)
	300	32.85 (14.78)	35.87 (16.14)	38.92 (17.51)	42.00 (18.90)	45.02 (20.26)	48.07 (21.63)	51.12 (23.00)	54.14 (24.36)	42.02 (18.91)
	600	42.60 (19.17)	45.62 (20.53)	48.67 (21.90)	51.75 (23.29)	54.77 (24.65)	57.82 (26.02)	60.87 (27.39)	63.89 (28.75)	51.7 7 (23.30)
	900	55.24 (24.86)	58.32 (26.24)	61.37 (27.62)	64.41 (28.98)	67.47 (30.36)	70.52 (31.73)	73.57 (33.11)	76.62 (34.48)	80.74 (36.33)
	1500	72.25 (32.51)	75.33 (33.90)	78.38 (35.27)	81.43 (36.64)	84.48 (38.02)	87.53 (39.39)	90.58 (40.76)	93.63 (42.13)	97.75 (43.99)
	2500	126.49 (56.92)	129.57 (58.31)	132.62 (59.68)	135.67 (61.05)	138.72 (62.42)	141.78 (63.80)	144.83 (65.17)	147.88 (66.55)	152.00 (68.4)
EN 1092-1										
DN 40	PN 40	7.46 (3.36)	7.92 (3.56)	8.38 (3.77)	8.85 (3.98)	9.31 (4.19)	9.77 (4.40)	10.24 (4.61)	10.70 (4.82)	9.39 (4.23)
	PN 63/100	11.52 (5.18)	11.98 (5.39)	12.44 (5.60)	12.91 (5.81)	13.37 (6.23)	13.84 (6.34)	14.30 (6.44)	14.76 (6.64)	13.45 (6.05)
	PN 160	13.17 (5.93)	13.63 (6.13)	14.10 (6.35)	14.56 (6.55)	15.03 (6.76)	15.49 (6.97)	15.95 (7.18)	16.42 (7.39)	16.83 (7.57)
DN 50	PN 40	9.87 (4.44)	10.45 (4.70)	11.06 (5.00)	11.66 (5.25)	12.25 (5.51)	12.84 (5.78)	13.44 (6.05)	14.03 (6.31)	12.81 (5.76)
	PN 63	13.37 (6.02)	13.96 (6.28)	14.56 (6.55)	15.16 (6.82)	15.75 (7.09)	16.35 (7.36)	16.94 (7.62)	17.54 (7.89)	16.31 (7.34)
	PN 100	16.05 (7.22)	16.63 (7.48)	17.23 (7.75)	17.83 (8.02)	18.43 (8.29)	19.02 (8.56)	19.61 (8.82)	20.21 (9.09)	18.99 (8.55)
	PN 160	18.14 (8.16)	18.95 (8.53)	19.76 (8.89)	20.56 (9.25)	21.37 (9.62)	22.18 (9.98)	22.98 (10.34)	23.79 (10.71)	23.96 (10.78)
DN 80 Schedule 40	PN 40	16.85 (7.58)	18.47 (8.31)	20.08 (9.04)	21.70 (9.77)	23.32 (10.49)	24.94 (11.22)	26.56 (11.95)	28.18 (12.68)	23.97 (10.79)
	PN 63	20.70 (9.32)	22.32 (10.04)	23.93 (10.77)	25.55 (11.50)	27.17 (12.23)	28.79 (12.96)	30.41 (13.68)	32.03 (14.41)	27.82 (12.52)
	PN 100	25.29 (11.38)	26.90 (12.11)	28.51 (12.83)	30.13 (13.56)	31.75 (14.29)	33.37 (15.02)	34.99 (15.75)	36.61 (16.47)	32.40 (14.58)
	PN 160	29.45 (13.25)	31.10 (14.00)	32.72 (14.72)	34.33 (15.45)	35.95 (16.18)	37.57 (16.91)	39.17 (17.64)	40.81 (18.36)	43.50 (19.58)
DN 80 Schedule 80	PN 40	16.53 (7.44)	17.76 (7.99)	19.07 (8.58)	20.36 (9.16)	21.65 (9.74)	22.93 (10.32)	24.22 (10.90)	25.51 (11.48)	21.12 (9.50)

Table 64: EFW Extended Flanged Seal Weights in Pounds (Kilograms) *(continued)*

Pipe size	Class	Extension length								
		1-in. (25 mm)	2-in. (51 mm)	3-in. (76 mm)	4-in. (102 mm)	5-in. (127 mm)	6-in. (152 mm)	7-in. (178 mm)	8-in. (203 mm)	9-in. (229 mm)
	PN 63	20.38 (9.17)	21.61 (9.72)	22.92 (10.31)	24.21 (10.89)	25.50 (11.48)	26.78 (12.05)	28.07 (12.63)	29.36 (13.21)	24.97 (11.24)
	PN 100	24.97 (11.24)	26.20 (11.79)	27.51 (12.38)	28.79 (12.96)	30.08 (13.54)	31.37 (14.12)	32.65 (14.69)	33.94 (15.27)	29.56 (13.30)
	PN160	29.17 (13.13)	30.67 (13.80)	32.17 (17.48)	33.67 (15.15)	35.17 (15.83)	36.66 (16.50)	38.16 (17.17)	39.66 (17.85)	40.51 (18.23)
DN 80 Headbox	PN 40	16.92 (7.61)	18.56 (8.35)	20.23 (9.10)	22.06 (9.93)	23.56 (10.60)	25.23 (11.35)	26.90 (12.11)	28.56 (12.85)	24.40 (10.98)
	PN 63	20.77 (9.35)	22.41 (10.08)	24.08 (10.84)	25.91 (11.66)	27.41 (12.33)	29.08 (13.09)	30.75 (13.84)	32.41 (14.58)	28.25 (12.71)
	PN 100	25.35 (11.41)	26.99 (12.15)	28.66 (12.90)	30.49 (13.72)	31.99 (14.40)	33.66 (15.15)	35.33 (15.90)	37.00 (16.65)	32.84 (14.78)
	PN 160	29.49 (13.27)	31.19 (14.04)	32.86 (14.79)	34.53 (15.54)	36.20 (16.29)	37.87 (17.04)	39.50 (17.78)	41.20 (18.54)	43.94 (19.77)
DN 100 Schedule 40	PN 10/16	19.23 (8.65)	22.07 (9.93)	24.95 (11.23)	27.85 (12.53)	30.73 (13.83)	33.62 (15.13)	36.50 (16.43)	39.39 (17.73)	29.81 (13.41)
	PN 40	23.32 (10.50)	26.16 (11.77)	29.05 (13.07)	31.94 (14.37)	34.83 (15.67)	37.71 (16.97)	40.60 (18.27)	43.48 (19.57)	33.90 (15.26)
	PN 63	29.83 (13.42)	32.67 (14.70)	35.56 (16.00)	38.45 (17.30)	41.34 (18.60)	44.22 (19.90)	47.11 (21.20)	50.00 (22.50)	40.41 (18.18)
	PN 100	37.37 (16.82)	40.21 (18.09)	43.10 (19.40)	45.99 (20.70)	48.88 (22.00)	51.76 (23.29)	54.65 (24.59)	57.53 (25.89)	47.95 (21.58)
	PN 160	42.48 (19.12)	45.4 (20.43)	48.29 (21.73)	51.17 (23.03)	54.05 (24.32)	56.94 (25.62)	59.82 (26.92)	52.71 (28.22)	66.63 (29.98)
DN 100 Schedule 80	PN 16	18.85 (8.48)	21.43 (9.64)	23.98 (10.79)	26.53 (11.94)	29.08 (13.09)	31.66 (14.25)	34.17 (15.38)	36.72 (16.52)	26.81 (12.06)
	PN 40	22.95 (10.33)	25.53 (11.49)	28.07 (12.63)	30.62 (13.78)	33.17 (14.93)	35.75 (16.09)	38.27 (17.22)	40.82 (18.37)	30.90 (13.91)
	PN 63	29.46 (13.26)	32.04 (14.42)	34.58 (15.56)	37.13 (16.71)	39.68 (17.86)	42.26 (19.02)	44.78 (20.15)	47.33 (21.30)	37.41 (16.83)
	PN 100	36.99 (16.65)	39.57 (17.81)	42.12 (18.95)	44.67 (20.10)	47.22 (21.25)	49.80 (22.41)	52.32 (23.54)	84.87 (24.69)	44.95 (20.23)
	PN 160	42.18 (18.98)	44.73 (20.13)	47.30 (21.29)	49.85 (22.43)	52.40 (23.58)	54.94 (24.72)	57.49 (25.87)	60.03 (27.01)	63.62 (28.63)
DN 100 Headbox	PN 16	19.38 (8.72)	22.40 (10.08)	25.45 (11.45)	28.53 (12.84)	31.55 (14.20)	34.60 (15.57)	37.65 (16.94)	40.67 (18.30)	28.55 (12.85)
	PN 40	23.48 (10.57)	26.49 (11.92)	29.54 (13.29)	32.63 (14.68)	35.65 (16.04)	38.70 (17.42)	41.75 (18.79)	44.77 (20.15)	32.64 (14.69)
	PN 63	29.99 (13.50)	33.00 (14.85)	36.05 (16.22)	39.14 (17.61)	42.16 (18.97)	45.21 (20.34)	48.26 (21.72)	51.28 (23.08)	39.15 (17.62)
	PN 100	37.52 (16.88)	40.54 (18.24)	43.59 (19.62)	46.68 (21.01)	49.69 (22.36)	52.74 (23.73)	55.80 (25.11)	58.81 (26.46)	46.69 (21.01)

Table 64: EFW Extended Flanged Seal Weights in Pounds (Kilograms) *(continued)*

Pipe size	Class	Extension length								
		1-in. (25 mm)	2-in. (51 mm)	3-in. (76 mm)	4-in. (102 mm)	5-in. (127 mm)	6-in. (152 mm)	7-in. (178 mm)	8-in. (203 mm)	9-in. (229 mm)
	PN 160	42.68 (19.21)	45.76 (20.59)	48.81 (21.96)	51.86 (23.34)	54.91 (24.71)	57.96 (26.08)	61.01 (27.45)	64.06 (28.83)	68.15 (30.67)
JIS										
40A	10K	6.09 (2.74)	6.55 (2.95)	7.01 (3.15)	7.48 (3.37)	7.94 (3.57)	8.41 (3.78)	8.87 (3.99)	9.33 (4.20)	8.02 (3.61)
	20K	6.52 (2.93)	6.98 (3.14)	7.45 (3.35)	7.91 (3.56)	8.38 (3.77)	8.84 (3.98)	9.30 (4.19)	9.33 (4.20)	8.02 (3.81)
	40k	9.64 (4.34)	10.10 (4.55)	10.57 (4.76)	11.03 (4.96)	11.50 (5.18)	11.96 (5.38)	12.43 (5.59)	12.89 (5.80)	11.85 (5.21)
50A	10K	7.73 (3.48)	8.31 (3.74)	8.91 (4.01)	9.51 (4.28)	10.11 (4.55)	10.70 (4.82)	11.30 (5.08)	11.89 (5.35)	10.67 (4.80)
	20K	7.91 (3.56)	8.49 (3.82)	9.10 (4.10)	9.70 (4.37)	10.29 (4.63)	10.89 (4.90)	11.48 (5.17)	12.07 (5.43)	10.85 (4.88)
	40K	11.18 (5.03)	11.76 (5.29)	12.37 (5.57)	13.00 (5.85)	13.56 (6.10)	14.16 (6.37)	14.75 (6.64)	15.35 (6.91)	14.12 (6.35)
80A Schedule 40	10K	12.41 (5.58)	14.02 (6.31)	15.63 (7.03)	17.25 (7.76)	18.87 (8.49)	20.49 (9.22)	22.11 (9.95)	23.73 (10.68)	19.52 (8.78)
	20K	15.51 (6.98)	17.12 (7.70)	18.73 (8.43)	20.35 (9.16)	21.97 (9.89)	23.59 (10.62)	25.21 (11.34)	26.83 (12.07)	22.62 (10.18)
	40K	21.92 (9.86)	23.53 (10.59)	25.15 (11.32)	26.77 (12.05)	28.39 (12.78)	30.00 (13.50)	31.62 (14.23)	33.24 (14.96)	29.04 (13.07)
80A Schedule 80	10K	12.09 (5.44)	13.32 (5.99)	14.63 (6.58)	15.91 (7.16)	17.20 (7.74)	18.49 (8.32)	19.78 (8.90)	21.06 (9.48)	16.68 (7.51)
	20K	15.19 (6.84)	16.42 (7.39)	17.73 (7.98)	19.01 (8.55)	20.30 (9.14)	21.59 (9.72)	22.88 (10.30)	24.16 (10.87)	19.78 (8.90)
	40K	21.60 (9.72)	22.83 (10.27)	24.14 (10.86)	25.43 (11.44)	26.72 (12.02)	28.00 (12.60)	29.29 (13.18)	30.58 (13.76)	26.19 (11.79)
100A Schedule 40	10K	17.15 (7.72)	19.99 (9.00)	22.87 (10.29)	25.77 (11.60)	28.65 (12.89)	31.54 (14.19)	34.42 (15.49)	37.31 (16.79)	27.73 (12.48)
	20K	22.16 (9.97)	24.99 (11.25)	27.88 (12.55)	30.78 (13.85)	33.66 (15.15)	36.55 (16.45)	39.43 (17.74)	42.31 (19.04)	32.73 (14.73)
	40K	35.21 (15.84)	38.05 (17.12)	40.94 (18.42)	43.83 (19.72)	46.72 (21.02)	49.60 (22.32)	52.49 (23.62)	55.37 (24.92)	45.79 (20.61)
100A Schedule 80	10K	16.77 (7.55)	19.35 (8.71)	21.90 (9.86)	24.45 (11.00)	27.00 (12.15)	29.58 (13.31)	32.09 (14.44)	34.64 (15.59)	24.73 (11.13)
	20K	21.78 (9.80)	24.36 (10.96)	26.91 (12.11)	29.46 (13.26)	32.00 (14.40)	34.59 (15.57)	37.10 (16.70)	39.65 (17.84)	29.73 (13.38)
	40K	34.83 (15.67)	37.41 (16.83)	39.96 (17.98)	42.51 (19.13)	45.06 (20.28)	47.64 (21.44)	50.16 (22.57)	52.71 (23.72)	42.79 (19.26)

Figure 37: PFW Pancake Seal

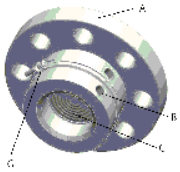

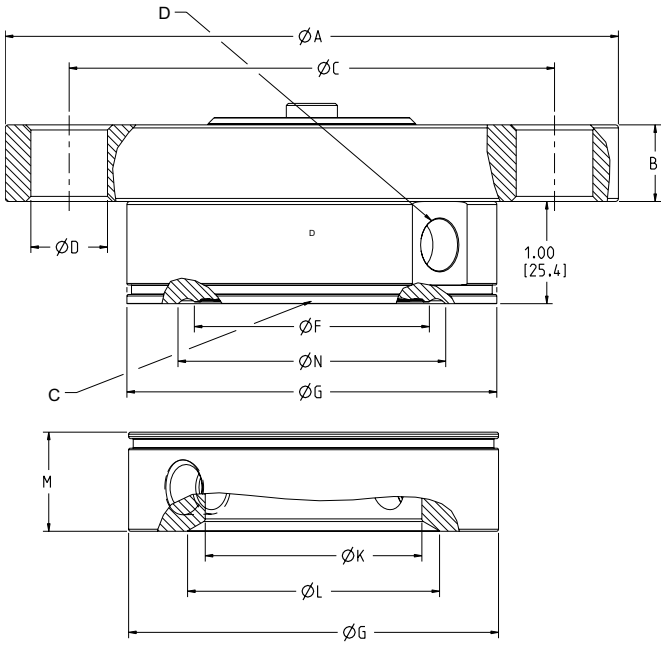

A. Process flange
B. Flushing connection
C. Diaphragm
D. Connection to transmitter
E. Flushing connection
F. Lower housing alignment clamp (option code SA)

Note
Dimensions are in inches (millimeters).

Table 65: PFW Pancake Seal Dimensions

Pipe size	Class	Flange diameter "A" in. (mm)	Flange thickness "B" in. (mm)	Number of bolts	Bolt circle"C" in. (mm)	Bolt hole diameter "D" in. (mm)	Standard diaphragm diameter "F" in. (mm)
ASME							
2-in.	150	6.00 (152)	0.69 (18)	4	4.75 (121)	0.75 (19)	2.30 (58)
	300	6.50 (165)	0.81 (21)	8	5.00 (127)	0.75 (19)	2.30 (58)
	600	6.50 (165)	1.00 (25)	8	5.00 (127)	0.75 (19)	2.30 (58)
	900/1500	8.50 (216)	1.50 (38)	8	6.50 (165)	1.00 (25)	2.30 (58)
	2500	9.25 (235)	2.00 (51)	8	6.75 (172)	1.13 (29)	2.30 (58)
3-in.	150	7.50 (191)	0.88 (22)	4	6.00 (152)	0.75 (19)	3.50 (89)
	300	8.25 (210)	1.06 (27)	8	6.62 (168)	0.88 (22)	3.50 (89)
	600	8.25 (210)	1.25 (32)	8	6.62 (168)	0.88 (22)	3.50 (89)
	900	10.50 (267)	1.50 (38)	8	8.00 (203)	1.25 (32)	3.50 (89)
	1500	10.50 (267)	1.88 (48)	8	8.00 (203)	1.25 (32)	3.50 (89)
	2500	12.00 (305)	2.62 (67)	8	9.00 (229)	1.38 (35)	3.50 (89)
EN1092-1							
DN 50	PN 40	6.50 (165)	0.67 (17)	4	4.92 (125)	0.71 (18)	2.30 (58)
	PN 63	7.09 (180)	0.91 (23)	4	5.31 (135)	0.88 (22)	2.30 (58)
	PN 100	7.68 (195)	0.98 (25)	4	5.71 (145)	1.10 (28)	2.30 (58)

Table 65: PFW Pancake Seal Dimensions *(continued)*

Pipe size	Class	Flange diameter "A" in. (mm)	Flange thickness "B" in. (mm)	Number of bolts	Bolt circle"C" in. (mm)	Bolt hole diameter "D" in. (mm)	Standard diaphragm diameter "F" in. (mm)
DN 80	PN 40	7.87 (200)	0.83 (21)	8	6.30 (160)	0.71 (18)	3.50 (89)
	PN 63	8.46 (215)	0.98 (25)	8	6.69 (170)	0.88 (22)	3.50 (89)
	PN 100	9.06 (230)	0.98 (25)	8	7.09 (180)	1.10 (28)	3.50 (89)

Table 66: Additional PFW Pancake Seal Dimensions

Pipe size	Outer diameter "G" in. (mm)	Inner diameter "K" in. (mm)	Beveled diameter "L" in. (mm)	Thickness with ¼-NPT F.C. "M" in. (mm)	Thickness with ½-NPT F.C. "M" in. (mm)	Minimum gasket I.D. "N" in. (mm)	Weight lb (kg)
ASME							
2-in.	3.62 (92)	2.12 (54)	2.48 (63)	0.97 (25)	1.30 (33)	2.5 (64)	8.61 (3.87)
	3.62 (92)	2.12 (54)	2.48 (63)	0.97 (25)	1.30 (33)	2.5 (64)	10.20 (4.59)
	3.62 (92)	2.12 (54)	2.48 (63)	0.97 (25)	1.30 (33)	2.5 (64)	11.65 (5.24)
	3.62 (92)	2.12 (54)	N/A	0.97 (25)	1.30 (33)	2.5 (64)	24.84 (11.18)
	3.62 (92)	2.12 (54)	N/A	0.97 (25)	1.30 (33)	2.5 (64)	36.92 (16.61)
3-in.	5.00 (127)	3.60 (91)	N/A	0.97 (25)	1.30 (33)	3.7 (94)	16.83 (7.57)
	5.00 (127)	3.60 (91)	N/A	0.97 (25)	1.30 (33)	3.7 (94)	20.88 (9.40)
	5.00 (127)	3.60 (91)	N/A	0.97 (25)	1.30 (33)	3.7 (94)	23.35 (10.51)
	5.00 (127)	3.60 (91)	N/A	0.97 (25)	1.30 (33)	3.7 (94)	33.83 (15.22)
	5.00 (127)	3.60 (91)	N/A	0.97 (25)	1.30 (33)	3.7 (94)	47.39 (19.98)
	5.00 (127)	3.60 (91)	N/A	0.97 (25)	1.30 (33)	3.7 (94)	81.97 (36.89)
EN1092-1							
DN 50	4.00 (102)	2.40 (61)	N/A	0.97 (25)	1.30 (33)	2.5 (64)	10.67 (4.80)
	4.00 (102)	2.40 (61)	N/A	0.97 (25)	1.30 (33)	2.5 (64)	14.24 (6.41)
	4.00 (102)	2.40 (61)	N/A	0.97 (25)	1.30 (33)	2.5 (64)	16.89 (7.60)
DN 80	5.43 (138)	3.60 (91)	N/A	0.97 (25)	1.30 (33)	3.7 (94)	18.76 (8.44)
	5.43 (138)	3.60 (91)	N/A	0.97 (25)	1.30 (33)	3.7 (94)	22.60 (10.17)
	5.43 (138)	3.60 (91)	N/A	0.97 (25)	1.30 (33)	3.7 (94)	27.07 (12.18)

Figure 38: FCW Flush Flanged Seal – RTJ Gasket Surface Two-Piece Design (shown with flushing ring)

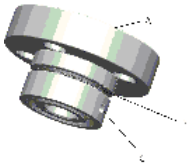

A. Process flange
B. Diaphragm
C. Flushing connection
D. Connection to transmitter

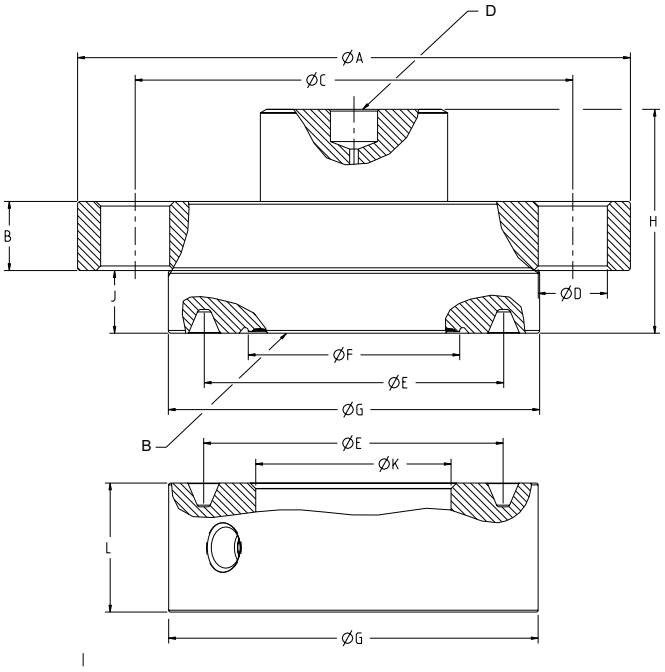

Note
Dimensions are in inches (millimeters).

Table 67: Dimensions for FCW Two-Piece Flange Type Flush Diaphragm Seal

Pipe size	Class	Flange diameter "A" in. (mm)	Flange thickness "B" in. (mm)	Bolt circle diameter "C" in. (mm)	Bolt hole diameter "D" in. (mm)	Overall height "H"in. (mm)	Raised face height "J" in. (mm)
ASME							
2-in.	150	6.00 (152)	0.69 (18)	4.75 (121)	0.75 (19)	2.43 (62)	0.68 (17)
	300	6.50 (165)	0.82 (21)	5.00 (127)	0.75 (19)	2.43 (62)	0.68 (17)
	600	6.50 (165)	1.00 (25)	5.00 (127)	0.75 (19)	2.43 (62)	0.68 (17)
	900/1500	8.50 (216)	1.50 (38)	6.50 (165)	1.00 (25)	2.57 (65)	0.82 (21)
	2500	9.25 (235)	2.00 (51)	6.75 (171)	1.14 (29)	3.07 (78)	0.82 (21)
3-in.	150	7.50 (191)	0.88 (22)	6.00 (152)	0.75 (19)	2.43 (62)	0.68 (17)
	300	8.25 (210)	1.06 (27)	6.62 (168)	0.88 (22)	2.43 (62)	0.68 (17)
	600	8.25 (210)	1.25 (32)	6.62 (168)	0.88 (22)	2.43 (62)	0.68 (17)
	900	9.50 (241)	1.50 (38)	7.50 (191)	1.00 (25)	2.57 (65)	0.82 (21)
	1500	10.50 (267)	1.88 (48)	8.00 (203)	1.25 (32)	3.07 (78)	0.82 (21)
	2500	12.00 (305)	2.62 (67)	9.00 (229)	1.38 (35)	4.07 (103)	0.82 (21)

Table 68: Dimensional Table for FCW 2-Piece Flange Type Flush Diaphragm Seal

Pipe size	RTJ diameter "E" in. (mm)	Diaphragm diameter "F" in. (mm)	Raised face diameter "G" in. (mm)	Inner diameter "K" in. (mm)	Thickness with ¼- NPT F.C. "L" in. (mm)	Thickness with ½- NPT F.C. "L" in. (mm)	Weight lb (kg)
ASME							
2-in.	3.25 (83)	2.30 (58)	4.00 (102)	2.12 (54)	1.40 (36)	1.70 (43)	8.78 (3.95)
	3.25 (83)	2.30 (58)	4.25 (108)	2.12 (54)	1.40 (36)	1.70 (43)	10.56 (4.75)
	3.25 (83)	2.30 (58)	4.25 (108)	2.12 (54)	1.40 (36)	1.70 (43)	12.01 (5.40)
	3.75 (95)	2.30 (58)	4.88 (124)	2.12 (54)	1.40 (36)	1.70 (43)	26.81 (12.06)
	4.00 (102)	3.50 (89)	5.25 (133)	2.12 (54)	1.40 (36)	1.70 (43)	39.98 (17.99)
3-in.	4.50 (114)	3.50 (89)	5.25 (133)	3.60 (91)	1.50 (38)	1.80 (46)	16.04 (7.22)
	4.88 (124)	3.50 (89)	5.75 (146)	3.60 (91)	1.50 (38)	1.80 (46)	20.72 (9.32)
	4.88 (124)	3.50 (89)	5.75 (146)	3.60 (91)	1.50 (38)	1.80 (46)	23.19 (10.44)
	4.88 (124)	3.50 (89)	6.12 (155)	3.60 (91)	1.50 (38)	1.80 (46)	35.56 (16.00)
	5.38 (137)	3.50 (89)	6.62 (168)	3.60 (91)	1.50 (38)	1.80 (46)	50.72 (22.82)
	5.00 (127)	3.50 (89)	6.62 (168)	3.60 (91)	1.50 (38)	1.80 (46)	86.12 (38.75)

Figure 39: RCW Flanged Remote Seal RTJ and Flushing Connection Ring

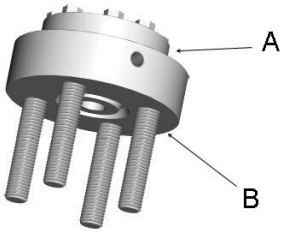

A. Upper housing
B. Diaphragm
C. Flushing connection/lower housing

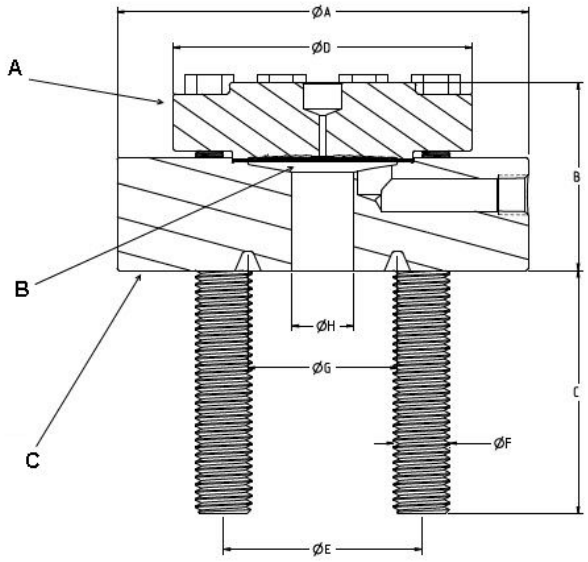

Note
Dimensions are in inches (millimeters).

Table 69: RCW Flanged Remote Seal Dimensions

Pipe size	Class	Lower diameter "A" in. (mm)	Overall height "B" in. (mm)		Protruding stud length "C" in. (mm)	Upper diameter "D" in. (mm)
			with ¼ flush in. (mm)	with ½ flush in. (mm)		
ASME B16.5						
½-in.	300/600	3.74 (95.0)	2.18 (55.4)	2.40 (61)	2.00 (50.8)	3.74 (95)
	900/1500	4.74 (120.4)	2.74 (69.6)	3.00 (76.2)	3.25 (82.6)	4.00 (101.6)
	2500	5.25 (133.4)	4.49 (114.0)	4.49 (114.0)	3.63 (92.2)	4.98 (126.5)
¾-in.	300/600	4.62 (117.3)	2.21 (56.1)	2.43 (61.7)	2.37 (60.2)	3.74 (95)
	900/1500	5.12 (130)	2.74 (69.6)	2.95 (74.9)	3.25 (82.6)	4.00 (101.6)
	2500	5.74 (145.8)	4.49 (114.0)	4.49 (114)	3.63 (92.2)	4.98 (126.5)
1-in.	150	4.24 (107.7	2.13 (54.1)	2.43 (61.7)	2.00 (50.8)	3.74 (95)
	300/600	4.88 (124.0)	2.21 (56.1)	2.43 (61.7)	2.37 (60.2)	3.74 (95)
	900/1500	5.88 (149.4)	2.74 (69.6)	2.97 (75.4)	3.62 (91.9)	4.00 (101.6)
	2500	6.25 (158.8)	4.49 (114)	4.49 (114)	4.06 (103.1)	4.98 (126.5)
1½-in.	150	4.99 (126.7)	2.43 (61.7)	2.43 (61.7)	2.00 (50.8)	3.74 (95)
	300/600	6.12 (155.4)	2.43 (61.7)	2.43 (61.7)	3.25 (82.6)	3.74 (95)
	900/1500	6.99 (177.5)	3.05 (77.5)	3.05 (77.5)	3.50 (88.9)	4.00 (101.6)

Pipe size	Class	Stud bolt circle "E" in. (mm)	Stud bolt diameter "F" in. (mm)	RTJ Groove pitch diameter "G" in. (mm)	Process hole diameter "H" in. (mm)	Weight lb (kg)
ASME/ ASME						
½-in.	300/600	2.62 (66.5)	0.50 (12.7)	1.34 (34)	0.62 (15.7)	6.55 (2.97)
	900/1500	3.25 (82.6)	0.75 (19.1)	1.56 (39.6)	0.62 (15.7)	2.51 (5.68)
	2500	3.50 (88.9)	0.75 (19.1)	1.67 (42.4)	0.62 (15.7)	26.99 (12.25)
¾-in.	300/600	3.25 (82.6)	0.63 (16)	1.69 (42.9)	0.82 (20.8)	8.96 (4.07)
	900/1500	3.50 (88.9)	0.75 (19.1)	1.75 (44.5)	0.82 (20.8)	3.63 (6.19)
	2500	3.75 (95.3)	0.75 (19.1)	2.00 (50.8)	0.82 (20.8)	29.49 (13.39)
1-in.	150	3.12 (79.2)	0.50 (12.7)	1.88 (47.8)	1.05 (26.7)	7.30 (3.31)
	300/600	3.50 (88.9)	0.63 (16)	2.00 (50.8)	1.05 (26.7)	9.58 (4.35)
	900/1500	4.00 (101.6)	0.88 (22.4)	2.00 (50.8)	1.05 (26.7)	17.05 (7.74)
	2500	4.25 (108)	0.88 (22.4)	2.38 (60.5)	1.05 (26.7)	32.85 (14.91)
1½-in.	150	3.88 (98.6)	0.50 (12.7)	2.56 (65)	1.61 (40.9)	10.43 (4.73)
	300 /600	4.50 (114.3)	0.75 (19.1)	2.69 (68.3)	1.61 (40.9)	15.67 (7.11)
	900/1500	4.88 (124)	1.00 (25.4)	2.69 (68.3)	1.61 (40.9)	24.75 (11.24)

Figure 40: FUW Flush Flanged Type Seal - EN1092-1 Type D

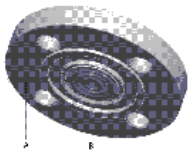

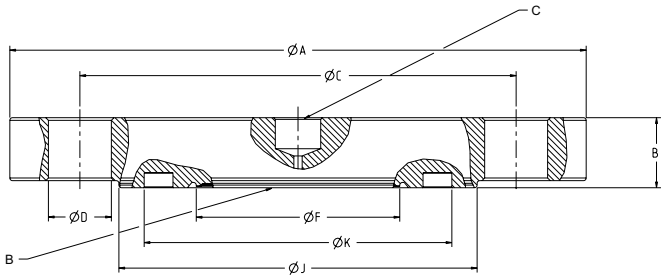

A. Process flange
B. Diaphragm
C. Connection to transmitter

Note
Dimensions are in inches (millimeters).

Table 70: FUW Flush Flanged Type Seal Dimensions

Pipe size	Class	Flange diameter "A" in. (mm)	Flange thickness "B" in. (mm)	Bolt circle "C" in. (mm)	Bolt hole diameter "D" in. (mm)	Number of bolts
EN 1092-1						
DN 50	PN 40	6.50 (165)	0.79 (20)	4.92 (125)	0.71 (18)	4
DN 80	PN 40	7.87 (200)	0.94 (24)	6.30 (160)	0.71 (18)	8

Standard diaphragm diameter "F" in. (mm)	Raised face diameter "G" in. (mm)	Groove O.D. "J"	Groove I.D. "K"	Groove depth "L"	Weight lb (kg)
EN 1092-1					
2.30 (58)	4.00 (102)	3.46 (88)	2.83 (72)	0.16 (4.00)	6.29 (2.83)
3.50 (89)	5.43 (138)	4.76 (121)	4.13 (105)	0.16 (4.00)	11.29 (5.08)

Figure 41: FVW Flush Flanged Type Seal - EN1092-1 Type C

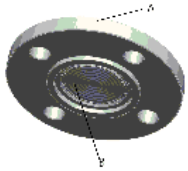

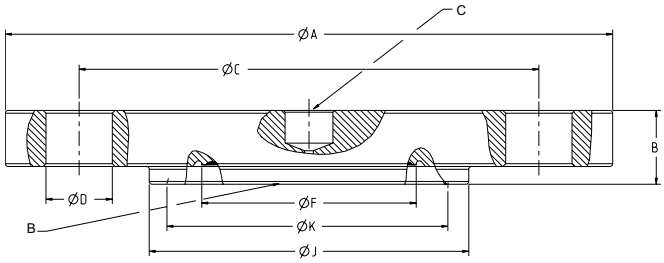

A. Process flange
B. Diaphragm
C. Connection to transmitter

Note
Dimensions are in inches (millimeters).

Table 71: FVW Flush Flanged Type Seal Dimensions

Pipe size	Class	Flange diameter "A" in. (mm)	Flange thickness "B" in. (mm)	Bolt circle "C" in. (mm)	Bolt hole diameter "D" in. (mm)	Number of bolts
EN 1092-1						

Table 71: FVW Flush Flanged Type Seal Dimensions *(continued)*

Pipe size	Class	Flange diameter “A” in. (mm)	Flange thickness “B” in. (mm)	Bolt circle “C” in. (mm)	Bolt hole diameter “D” in. (mm)	Number of bolts
DN 50	PN 40	6.50 (165)	0.79 (20)	4.92 (125)	0.71 (18)	4
DN 80	PN 40	7.87 (200)	0.94 (24)	6.30 (160)	0.71 (18)	8

Standard diaphragm diameter “F” in. (mm)	Groove O.D. “J” in. (mm)	Tongue I.D. “K” in. (mm)	Tongue depth “L” in. (mm)	Weight lb (kg)
EN 1092-1				
2.30 (58)	3.43 (87)	2.87 (73)	0.18 (4.50)	5.52 (2.48)
3.50 (89)	4.72 (120)	4.17 (106)	0.18 (4.50)	10.01 (4.50)

Figure 42: RTW Threaded Seal



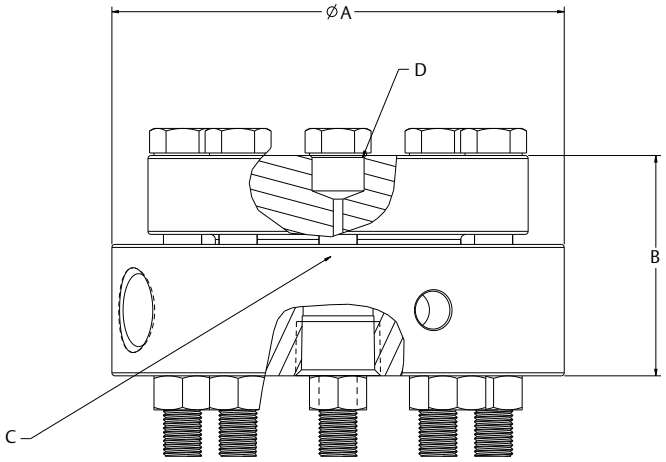

A. Overall diameter
B. Overall height
C. Diaphragm
D. Connection to transmitter

Note
Dimensions are in inches (millimeters).

Table 72: RTW Threaded Seal Dimensions

Rating	Overall diameter 'A' in. (mm)		Overall height “B” in. (mm)		Weight lbs. (kg)	
	No or ¼-in. NPT flush connection	½-in. NPT flush connection	No or ¼-in. NPT flush connection	½-in. NPT flush connection	No or ¼-in. NPT flush connection	½-in. NPT flush connection
2500 psi (173 bar)	3.74 (95)	4.45 (113.0)	1.92 (48.8)	2.17 (55.1)	5.89 (2.67)	8.24 (3.74)
5000 psi (345 bar)	4.00 (101.6)	4.00 (101.6)	2.49 (63.2)	2.77 (70.4)	9.41 (4.27)	10.29 (4.67)
10000 psi (690 bar)	5.23 (132.8)	5.98 (151.9)	4.49 (114.0)	4.49 (114.0)	28.45 (12.90)	28.36 (12.86)

Figure 43: HTS Male Threaded Seal

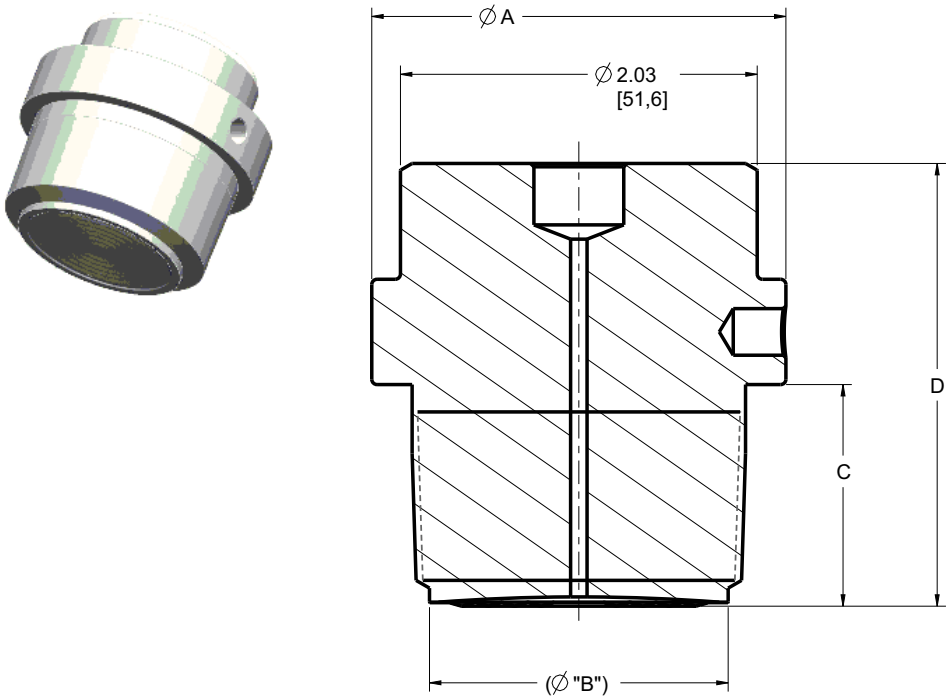

Note
Dimensions are in inches (millimeters).

Table 73: HTS Male Threaded Seal Dimensions

Connection size	Outer diameter "A" in. (mm)	Diaphragm diameter "B" in. (mm)	Length "C" in. (mm)	Overall height "D" in. (mm)	Weight lb (kg)
ASME NPT					
1-in. NPT	2.03 (51.6)	1.09 (27.9)	1.24 (31.5)	2.50 (63.5)	1.60 (0.72)
1½-in. NPT	2.36 (59.9)	1.70 (43.2)	1.24 (31.5)	2.50 (63.5)	2.32 (1.04)
2-in. NPT	2.74 (69.6)	1.90 (48.3)	1.24 (31.5)	2.50 (63.5)	3.09 (1.39)
ISO 228-1 BSP					
G1 BSP	2.03 (51.6)	1.09 (27.9)	0.88 (22.0)	2.15 (54.6)	1.48 (0.67)
G1½ BSP	2.36 (59.9)	1.70 (43.2)	0.98 (24.9)	2.24 (56.9)	2.10 (0.95)
G2 BSP	2.74 (69.6)	1.90 (48.3)	1.24 (31.5)	2.50 (63.5)	3.06 (1.38)

Figure 44: SCW Tri-Clamp Seal

1½-in. size **2-in. size** **2½-. 3-. and 4-in. sizes**



A. Connection to transmitter
B. Diaphragm

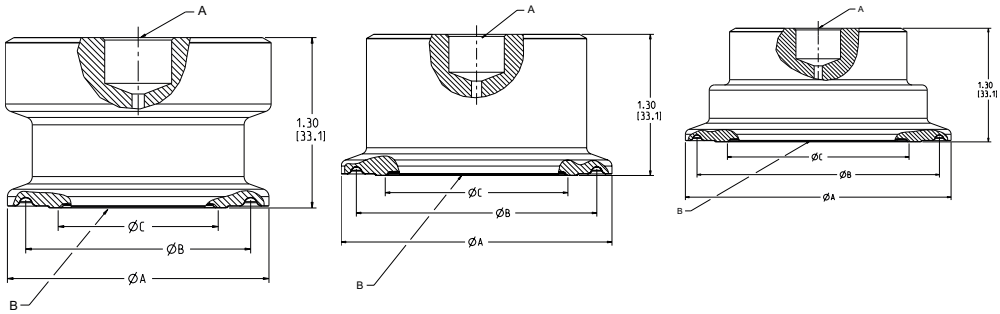

Note
Dimensions are in inches (millimeters).

Table 74: SCW Tri-Clamp Seal Dimensions

Pipe size	Outer diameter "A" in. (mm)	O-ring groove diameter "B" in. (mm)	Diaphragm diameter "C" in. (mm)	Weight lb (kg)
1½-in.	2.00 (51)	1.72 (44)	1.21 (31)	0.97 (0.44)
2-in.	2.50 (64)	2.22 (56)	1.68 (43)	1.23 (0.55)
2½-in.	3.05 (77)	2.78 (71)	2.07 (53)	1.56 (0.70)
3-in.	3.58 (91)	3.28 (83)	2.58 (66)	1.98 (0.89)
4-in.	4.68 (119)	4.35 (110)	3.66 (93)	3.02 (1.36)

Figure 45: SSW Tank Spud Seal



A. Extension length
B. Connection to transmitter
C. Diaphragm

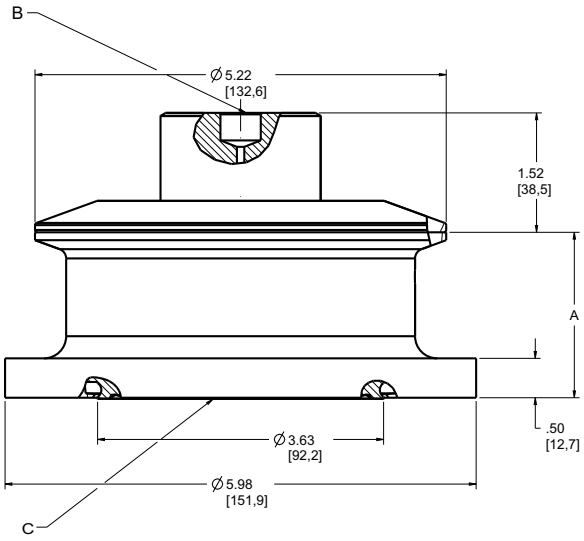

Note
Dimensions are in inches (millimeters).

Note
Wetted surfaces of spud are 32 Ra max.

Table 75: SSW Tank Spud Seal Dimensions

Pipe size	Extension length	"A" in. (mm)	Weight lb (kg)
4-in. SCH 5	2-in.	2.12 (54)	9.20 (4.14)
	6-in.	6.12 (156)	12.66 (5.70)

Figure 46: STW Hygienic Thin Wall Tank Spud Seal

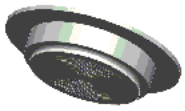

A. Connection to transmitter
B. Diaphragm

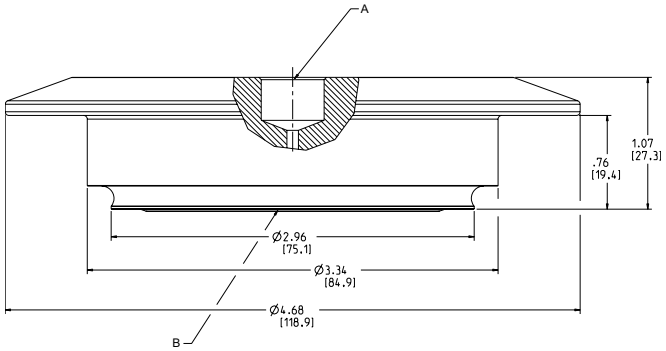

Weight = 3.09 lb (1.39 kg)

Note
Dimensions are in inches (millimeters).

Figure 47: EES Hygienic Flanged Tank Spud Extended Seal



A. Connection to transmitter
B. Diaphragm

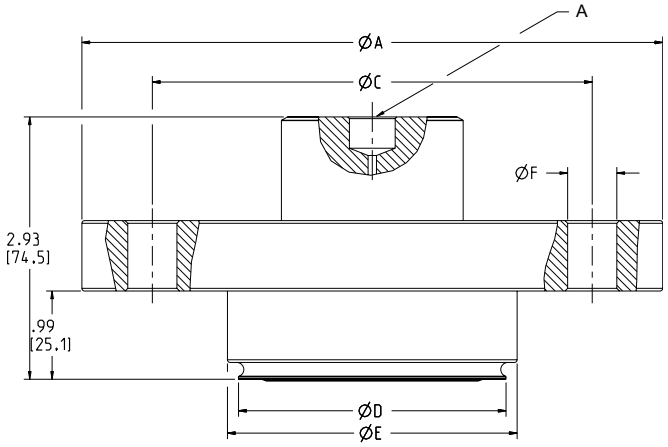

Note
Dimensions are in inches (millimeters).

Table 76: EES Hygienic Flanged Tank Spud Extended Seal Dimensions

Pipe size	Flange diameter "A"in. (mm)	Flange thickness "B"in. (mm)	Number of bolts	Bolt circle diameter "C"in. (mm)	Standard diaphragm diameter "D" in. (mm)	Extension diameter "E" in. (mm)	Bolt hole diameter "F" in. (mm)	Weight lb (kg)
DN50	6.50 (165)	0.79 (20)	4	4.92 (125)	2.99 (76)	3.24 (82)	0.55 (14)	10.48 (4.72)
DN80	7.87 (200)	0.94 (24)	8	6.30 (160)	4.04 (102)	4.24 (108)	0.55 (14)	17.34 (7.80)

Figure 48: VCS Tri-Clamp In-Line Seal

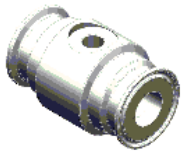

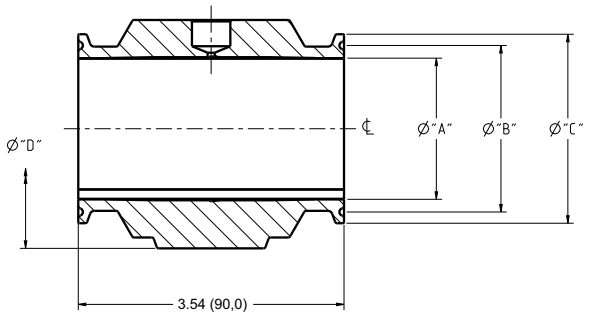

Note
Dimensions are in inches (millimeters).

Table 77: VCS Tri-Clamp In-Line Seal Dimensions

Pipe size	Inner diameter "A" in. (mm)	Groove diameter "B" in. (mm)	Flange diameter "C" in. (mm)	Outer diameter "D" in. (mm)	Weight lb (kg)
1-in.	0.88 (22)	1.72 (44)	1.99 (51)	2.33 (59)	2.67 (1.20)
1½-in.	1.37 (35)	1.72 (44)	1.99 (51)	2.73 (69)	2.69 (1.21)
2-in.	1.87 (48)	2.22 (56)	2.52 (64)	3.19 (81)	3.43 (1.54)
3-in.	2.87 (73)	3.28 (83)	3.58 (91)	4.14 (105)	4.76 (2.14)
4-in.	3.82 (97)	4.35 (110)	4.69 (119)	5.06 (129)	6.24 (2.81)

Figure 49: SVS VARIVENT Compatible Connection Seal

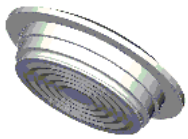

A. Connection to transmitter
B. Diaphragm

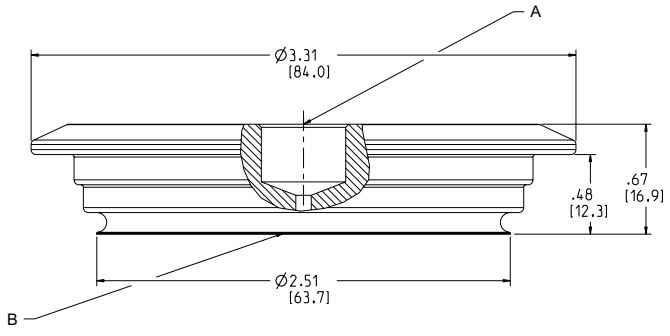

Weight = 1.13 lb (0.51 kg)

Note
Dimensions are in inches (millimeters).

Figure 50: SHP Cherry-Burrell "I" Line Seal

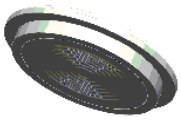

A. Connection to transmitter
B. Diaphragm

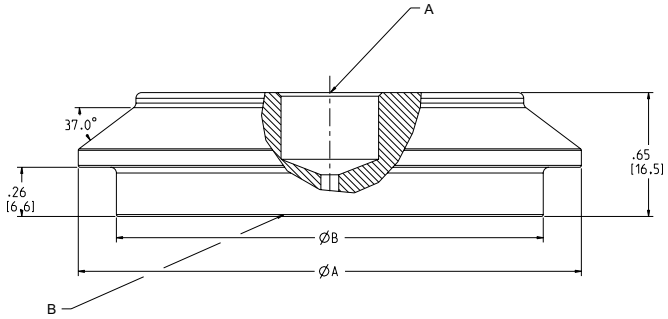

Note
Dimensions are in inches (millimeters).

Table 78: SHP Cherry-Burrell "I" Line Seal Dimensions

Size	Outer diameter "A" in. (mm)	Extension diameter "B" in. (mm)	Weight lb (kg)
2-in.	2.64 (67)	2.24 (57)	0.74 (0.33)
3-in.	3.88 (98)	3.31 (84)	1.76 (0.79)

Figure 51: SLS Hygienic Dairy Process Connection Female Thread Seal per DIN 11851

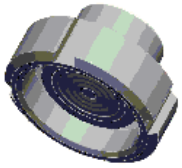

A. Connection to transmitter
B. Diaphragm

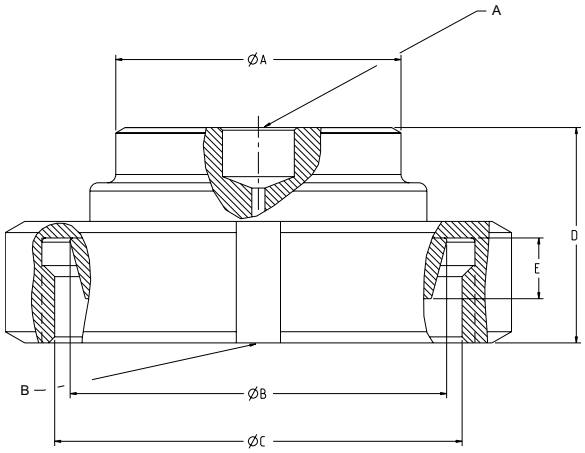

Dimensions are in inches (millimeters)

Table 79: SLS Hygienic Dairy Process Connection Female Thread Seal per DIN 11851 Dimensions

Female thread	Process size/ rating	Hub diameter "A" in. (mm)	"B" in. (mm)	Thread diameter "C" in. (mm)	Hub height "D" in. (mm)	"E" in. (mm)	Weight lb (kg)
DIN 11851	DN 40 PN 40	1.89 (48)	2.20 (56)	Rd 65 x 1/6-in.	1.18 (30)	0.39 (10)	1.61 (0.72)
	DN 50 PN 25	2.40 (61)	2.70 (69)	Rd 78 x 1/6-in.	1.22 (31)	0.43 (11)	2.32 (1.04)

Figure 52: WSP Saddle Seal

2- and 3-in. size

4-in. size

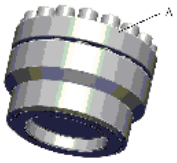

A. Upper housing
B. Connection to transmitter
C. Diaphragm

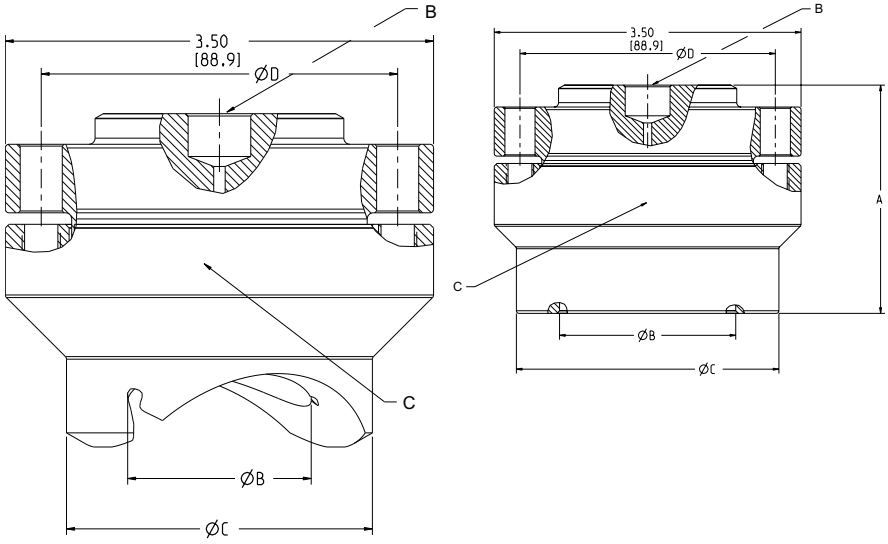

Note
Dimensions are in inches (millimeters).

Table 80: WSP Saddle Seal Dimensions

Size	Overall height "A" in. (mm)	Inner diameter "B" in. (mm)	Outer diameter "C" in. (mm)	Bolt circle diameter "D" in. (mm)	
				6-Bolt	8-Bolt
2-in.	2.72 (69)	1.50 (38)	2.50 (64)	2.99 (76)	2.91 (74)
3-in.	2.46 (63)	2.01 (51)	3.02 (77)	2.99 (76)	2.91 (74)
4-in. and larger	2.60 (66)	2.01 (51)	3.00 (76)	2.99 (76)	2.91 (74)

Table 81: WSP Saddle Seal Weights

Pipe size	Class	Weights lb (kg)
ASME		
2-in.	1250 psig	4.61 (2.09)
	1500 psig	4.63 (2.10)
3-in.	1250 psig	4.36 (1.98)
	1500 psig	4.38 (1.99)
4-in.	1250 psig	5.46 (5.48)
	1500 psig	5.60 (2.54)

Figure 53: UCP Threaded Type Seal

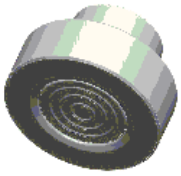

A. Connection to transmitter
B. Diaphragm

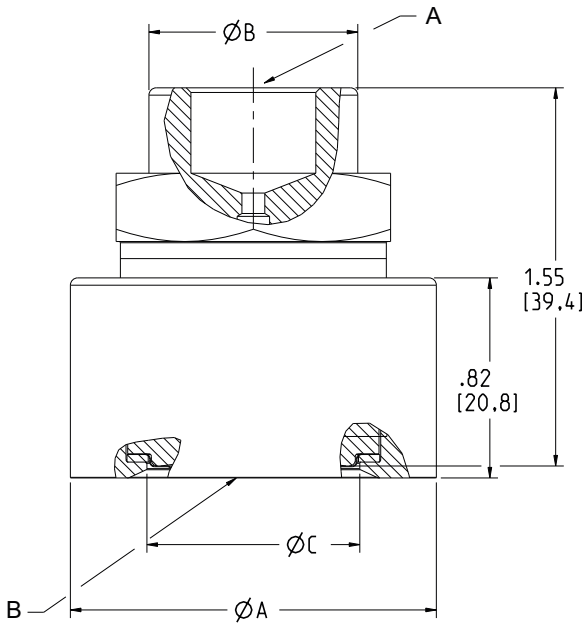

Weight = 1.33 lb (0.60 kg)

Note
Dimensions are in inches (millimeters).

Figure 54: PMW Sleeve Type Seal

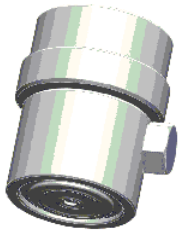

A. Connection to transmitter
B. Diaphragm

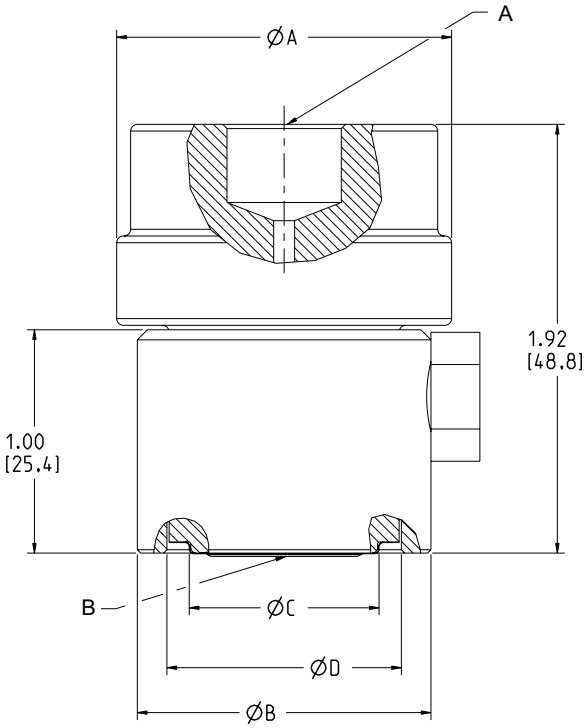

Weight = 0.77 lb (0.35 kg)

Note
Dimensions are in inches (millimeters).

Figure 55: CTW Chemical Tee Seal

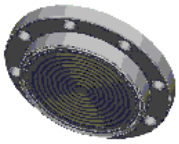

A. Connection to transmitter
B. Diaphragm

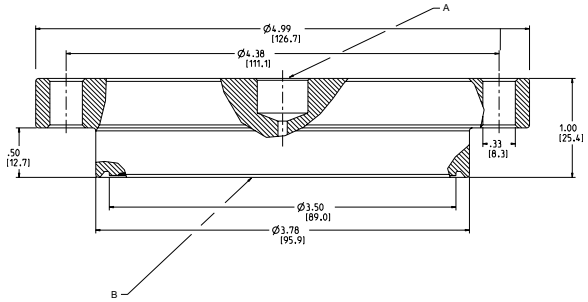

Weight = 4.18 lb (1.88 kg)

Note
Dimensions are in inches (millimeters).

Figure 56: TFS Wafer Style In-Line Seal

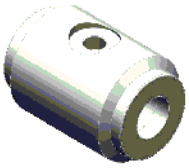

A. Connection to transmitter
B. Diaphragm

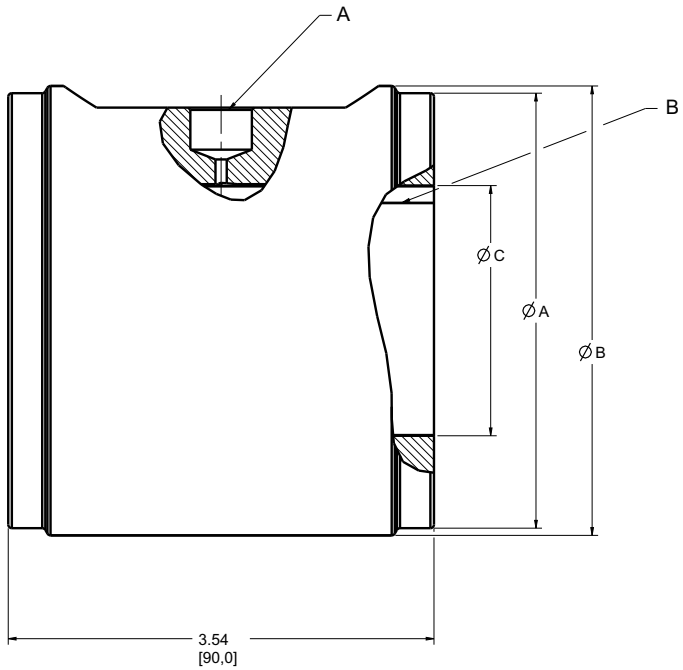

Note
Dimensions are in inches (millimeters).

Table 82: TFS Wafer Style In-Line Seal Dimensions

Pipe size	Flange face diameter “A” in. (mm)	Outer diameter “B” in. (mm)	Inner diameter “C” in. (mm)	Weight lb (kg)
1-in.	2.00 (51)	2.64 (67)	1.090 (28)	3.91 (1.76)

Table 82: TFS Wafer Style In-Line Seal Dimensions *(continued)*

Pipe size	Flange face diameter "A" in. (mm)	Outer diameter "B" in. (mm)	Inner diameter "C" in. (mm)	Weight lb (kg)
1½-in.	2.88 (73)	3.23 (82)	1.61 (41)	5.73 (2.58)
2-in.	3.62 (92)	3.74 (95)	2.07 (52)	7.42 (3.34)
3-in.	5.00 (127)	5.00 (127)	3.07 (78)	12.20 (5.49)
4-in.	6.19 (157)	6.19 (157)	4.00 (102)	17.56 (7.90)
DN25	2.68 (68)	2.72 (69)	1.09 (28)	4.76 (2.14)
DN40	3.46 (88)	3.46 (88)	1.61 (41)	7.35 (3.31)
DN50	4.02 (102)	4.09 (104)	1.99 (51)	9.97 (4.49)
DN80	5.43 (138)	5.47 (139)	3.24 (82)	15.24 (6.86)
DN100	6.38 (162)	6.46 (164)	4.22 (107)	18.69 (8.41)

Figure 57: WFW Flow-Thru Flanged Seal

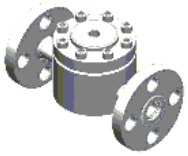

1-in. size

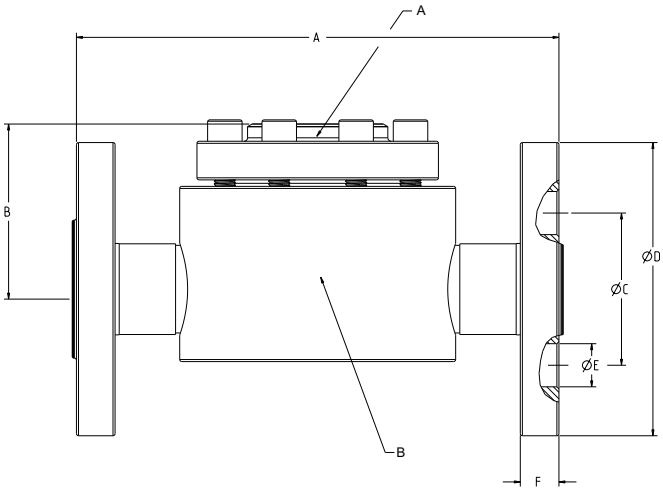

2- and 3-in. sizes

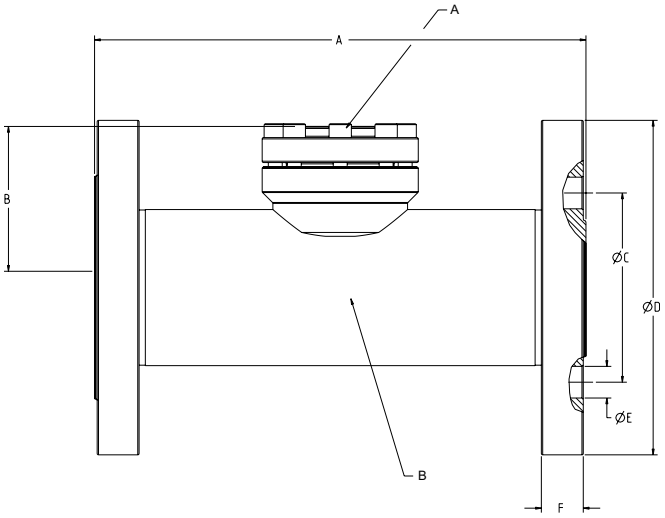

A. Connection to transmitter
B. Diaphragm

Note
Dimensions are in inches (millimeters).

Table 83: WFW Flow-Thru Flanged Seal Dimensions

Nominal pipe size	ASME class	Overall length “A” in. (mm)	Upper to centerline height “B”in (mm)	Bolt circle diameter “C”in. (mm)	Outside diameter “D”in. (mm)	Bolt hole diameter “E”in. (mm)	Flange thickness “F” in. (mm)	Weight lb (kg)
1-in.	150	7.00 (178)	2.40 (61)	3.12 (79)	4.25 (108)	0.62 (16)	0.50 (13)	11.80 (5.31)
2-in.		9.00 (229)	3.31 (84)	4.75 (121)	6.00 (152)	0.75 (19)	0.69 (18)	23.66 (10.73)
3-in.		11.00 (279)	3.61 (92)	6.00 (152)	7.50 (191)	0.75 (19)	0.88 (22)	29.08 (13.09)

Table 84: Capillary and Support Tube Weights Measured per Foot (.30 m) of Capillary

Part	Weight lb (kg)
0.03-in. ID. SST armor	0.095 (0.043)
0.04-in. ID. SST armor	0.091 (0.041)
0.075-in. ID. SST armor	0.100 (0.045)
0.03-in. ID. PVC armor	0.105 (0.048)
0.04-in. ID. PVC armor	0.100 (0.045)
0.075-in. ID. PVC armor	0.110 (0.050)
Capillary adapter	0.085 (0.039)
2-in. support tube	0.035 (0.016)
4-in. support tube	0.090 (0.041)

00813-0100-4016
Rev. UC
March 2023

For more information: **Emerson.com**

©2023 Emerson. All rights reserved.

Emerson Terms and Conditions of Sale are available upon request. The Emerson logo is a trademark and service mark of Emerson Electric Co. Rosemount is a mark of one of the Emerson family of companies. All other marks are the property of their respective owners.

The "Bluetooth" word mark and logos are registered trademarks owned by Bluetooth, SIG, Inc. and any use of such marks by Emerson is under license.

ROSEMOUNT™

EMERSON™