Quick Start Guide
00825-0100-3225, Rev AD
May 2025

Rosemount™ 225

Toroidal Conductivity Sensors



ROSEMOUNT™

EMERSON.

Safety information

⚠ WARNING

High pressure and temperature hazard

Failure to reduce the pressure and temperature may cause serious injury to personnel.

Before removing the sensor, reduce the process pressure to 0 psig and cool down the process temperature.

⚠ WARNING

Physical access

Unauthorized personnel may potentially cause significant damage to and/or misconfiguration of end users' equipment. This could be intentional or unintentional and needs to be protected against.

Physical security is an important part of any security program and fundamental in protecting your system. Restrict physical access by unauthorized personnel to protect end users' assets. This is true for all systems used within the facility.

⚠ CAUTION

Equipment damage

The wetted sensor materials may not be compatible with process composition and operating conditions.

Application compatibility is entirely the operator's responsibility.

Contents

Description and specifications..... 3
Installation..... 5
Calibration.....15
Maintenance and troubleshooting.....21
Accessories..... 27
Return of materials.....28

1 Description and specifications

1.1 Toroidal conductivity sensors

Rosemount 225 Toroidal Conductivity Sensors are intended to be used in many pharmaceutical and food and beverage applications where a sanitary design is required. These corrosion and fouling resistant sensors are ideal for measuring the concentration of CIP solutions, detecting product/water interfaces, checking product quality, and monitoring eluents in chromatographic separations.

1.2 Specifications

Cell constant (nominal):	3.0/cm
Wetted materials:	Body materials either glass-filled PEEK, glass-filled Tefzel, or unfilled Tefzel.
Minimum conductivity:	200 µS/cm (15 µS/cm when used with Rosemount 1056 and 56 transmitters)
Process connection:	2-in. Tri Clamp
Conformance to 3-A sanitary standards:	Sensors with option -07 meet 3-A sanitary standards for sensors and sensor fittings and connections used on milk and milk products equipment (74-06).
Compliance with FDA food contact requirements:	Sensors with option -07 are molded from PEEK that meet 21CF177.2415.
Compliance with USP Class VI:	Sensors with option -08 are molded from PEEK that meet USP Class VI requirements
Standard cable length:	20-ft. (6.1 m)
Maximum cable length:	200-ft. (61 m), up to 100-ft. (30 m) is standard.
Weight/shipping weight:	2 lb./3 lb. (1.0 kg/1.5 kg)

Table 1-1: Maximum Temperature and Pressure

Body material option	Wetted materials	Maximum temperature	Maximum pressure
03	Glass-filled PEEK	230 °F (110 °C)	200 psig (1480 kPa [abs])
07	Unfilled PEEK (meets 21CFR177.2415 and 3A standard 74-06)	266 °F (130 °C)	
08	Unfilled PEEK (meets USP Class VI standards)		
09	Unfilled Tefzel	230 °F (110 °C)	

2 Installation

2.1 Unpack and inspect

Procedure

1. Inspect the shipping container(s). If there is damage, then contact the shipper immediately for instructions.
2. If there is no apparent damage, then unpack the container(s).
3. Ensure that all items shown on the packing list are present.

   If items are missing, then contact Emerson.com/global.
4. Save the shipping container and packaging.

   They can be used to return the instrument to the factory in case of damage.

2.2 Install the sensor

Prerequisites

1. 2-in. Tri Clamp
2. 2-in. type 1 gasket
3. 2-in. tank ferrule or tee

The sensor may be installed in either a tank or pipe using a customer-supplied Tri Clamp and tee assembly. Keep at least 1-in. (25 cm) between the sensor and the pipe wall. If clearance is too small, then calibrate the sensor in place. Ensure that the sensor is completely submerged in liquid.

Figure 2-1: Rosemount 225 dimensional drawing

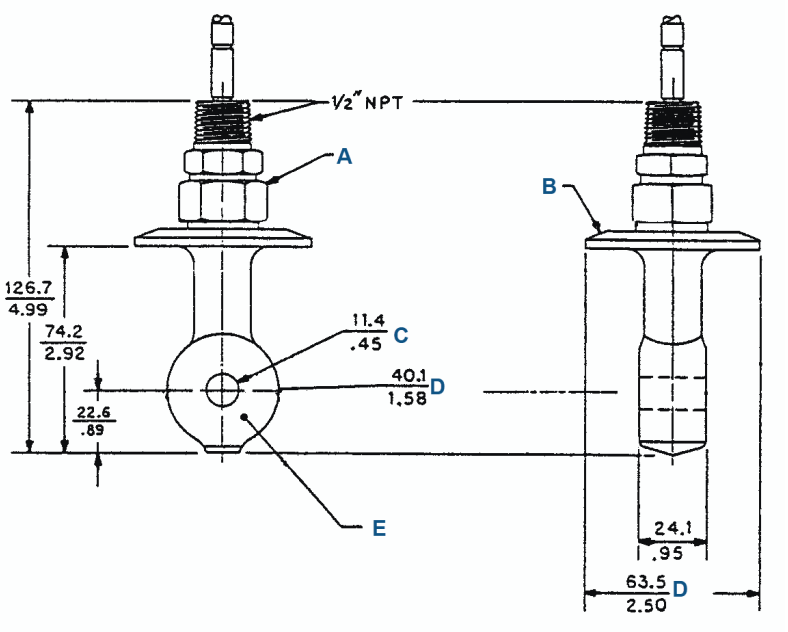

A. Swagelok® connector 316 stainless steel
B. Cap 316 stainless steel
C. Inner diameter
D. Outer diameter
E. Molded housing

Procedure

1. Mount the sensor in the pipe.
2. Mount the sensor in a vertical pipe run with flow from bottom to top.

   If the sensor must be mounted in a horizontal pipe run, then orient the sensor in the 3 o'clock or 9 o'clock position.
3. Ensure that the sensor is completely submerged in liquid to the flange.

2.3 Wire the sensor

Keep sensor wiring away from AC conductors and high current demanding equipment. Do not cut the cable.

NOTICE

For additional wiring information on this product, refer to Emerson.com/Rosemount-Liquid-Analysis-Wiring.

Figure 2-2: Wire Functions

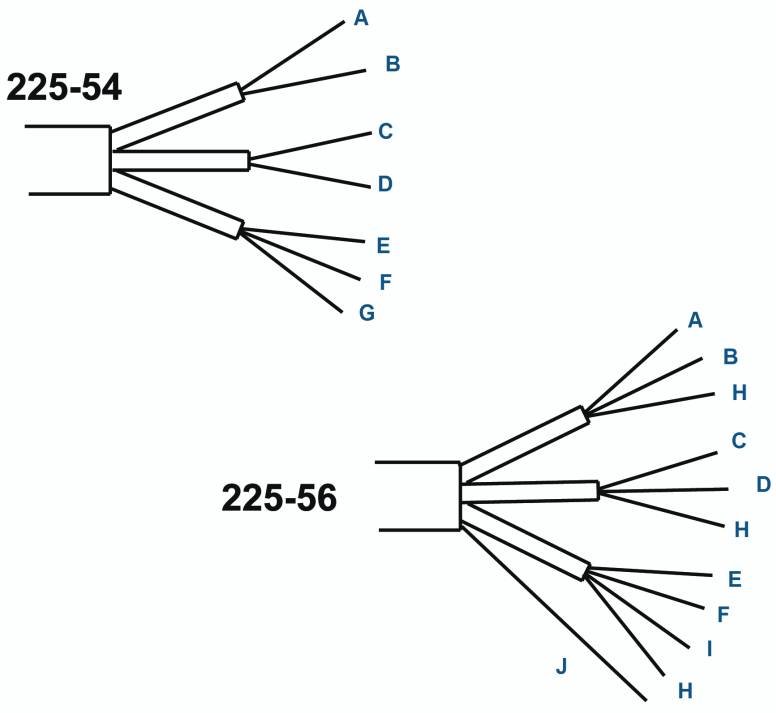

A. Green: Receive
B. Black: Receive common
C. White: Drive
D. Black: Drive common
E. Green: Resistance Temperature Device (RTD) in
F. White: RTD sense
G. Clear: RTD common
H. Clear: Shield
I. Black: RTD return
J. Clear: Outer shield

Figure 2-3: Wiring Diagram Connecting Rosemount 225-54 Sensor to Rosemount 1056 and 56 Transmitters

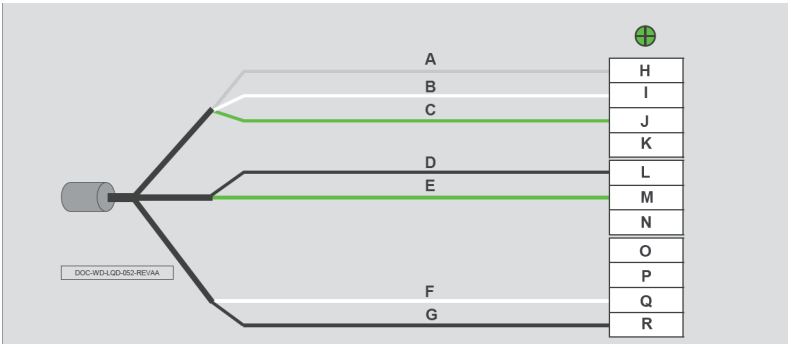

A. Clear (Outer Shield)
B. White (RTD Sense)
C. Green (RTD In)
D. Black (Receive Common)
E. Green (Receive)
F. White (Drive)
G. Black (Drive Common)
H. RTD RTN
I. SNS
J. RTD IN
K. RTD SH
L. RCV COM
M. RCV
N. RC SH
O. OUT SH
P. DR SH
Q. DRV
R. DRV COM

Figure 2-4: Wiring diagram connecting 225-56 to 1056 and 56 Transmitters

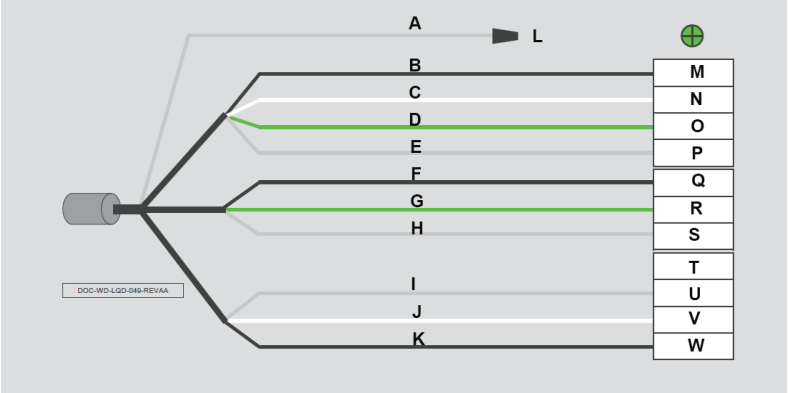

A. Clear (Outer Shield)
B. Black (RTD Return)
C. White (RTD Sense)
D. Green (RTD In)
E. Clear (RTD Shield)
F. Black (Receive Common)
G. Green (Receive)
H. Clear (Receive Shield)
I. Clear (Drive Shield)
J. White (Drive)
K. Black (Drive Common)
L. No Connection
M. RTD RTN
N. SNS
O. RTD IN
P. RTD SH
Q. RCV COM
R. RCV
S. RC SH
T. OUT SH
U. DR SH
V. DRV
W. DRV COM

Figure 2-5: Wiring Diagram Connecting Rosemount 225-54 Sensor to Rosemount 1066 Transmitter

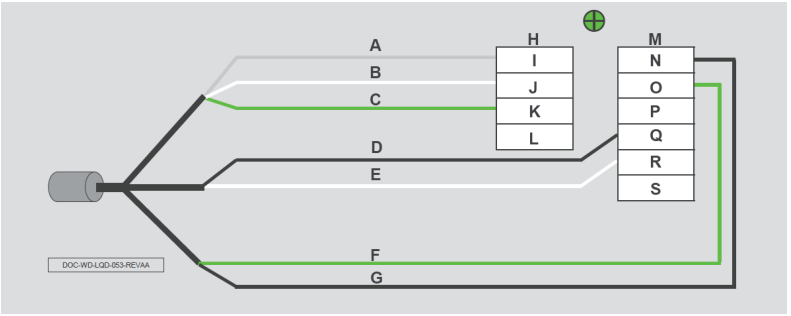

A. Clear (RTD Return)
B. White (RTD Sense)
C. Green (RTD In)
D. Black (Drive Common)
E. White (Drive)
F. Green (Receive)
G. Black (Receive Common)
H. TB2
I. RTN
J. SENSE
K. RTN IN
L. SHLD
M. TB1
N. RCV B
O. RCV A
P. RSHLD
Q. DRVB
R. DRVA
S. DSHLD

Figure 2-6: Wiring Diagram Connecting Rosemount 225-56 Sensor to Rosemount 1066 Transmitter

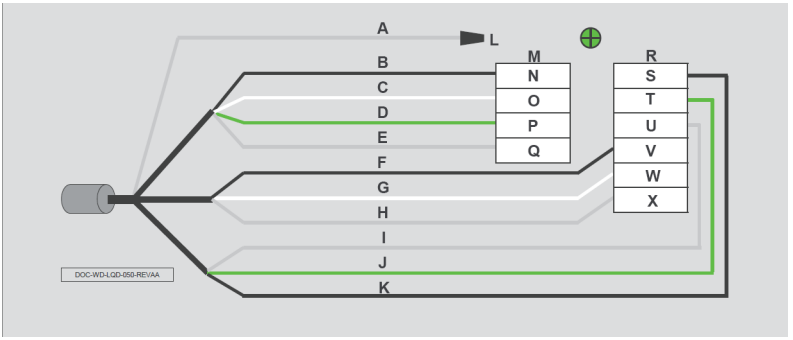

A. Clear (Outer Shield)
B. Black (RTD Return)
C. White (RTD Sense)
D. Green (RTD In)
E. Clear (RTD Shield)
F. Black (Drive Common)
G. White (Drive)
H. Clear (Drive Shield)
I. Clear (Receive Shield)
J. Green (Receive)
K. Black (Receive Common)
L. No Connection
M. TB2
N. RTN
O. SENSE
P. RTN IN
Q. SHLD
R. TB1
S. RCV B
T. RCV A
U. RSHLD
V. DRVB
W. DRVA
X. DSHLD

Figure 2-7: Wiring Diagram for Rosemount 5081 Transmitters

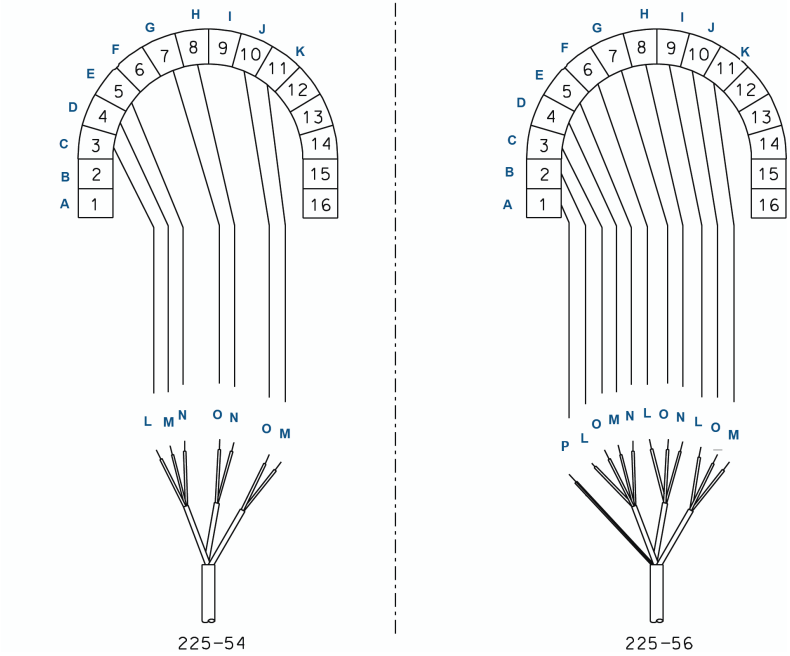

A. Reserved
B. RTD shield
C. RTD common
D. RTD sense
E. RTD in
F. Receive shield
G. Receive common
H. Receive
I. Drive shield
J. Drive common
K. Drive
L. Clear
M. White
N. Green
O. Black
P. Present in high temperature sensor (option -03) only

Figure 2-8: Wiring Sensors through a Remote Junction Box

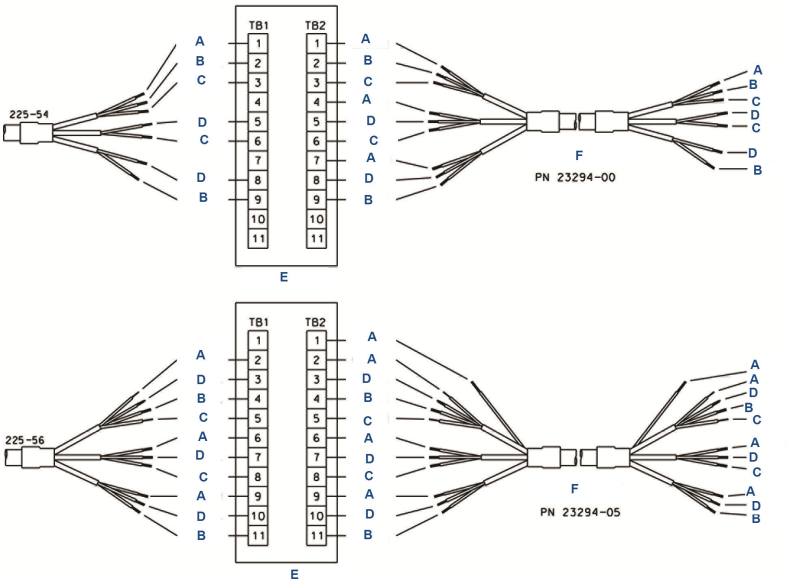

A. Clear
B. White
C. Green
D. Black
E. Junction box
F. Interconnect cable

Wire sensors point to point.

For wiring at the transmitter end, refer to the appropriate transmitter wiring diagram.

For interconnecting cable 23294-00, use the Rosemount 225-54 wiring diagram.

For interconnecting cable 23294-04 and 23294-05, use the Rosemount 225-56 wiring diagram.

Figure 2-9: Remote Junction Box (PN 23550-00) Dimensions

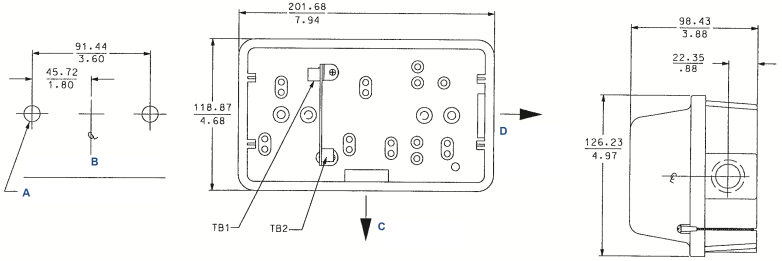

A. Drill for 10/32 screw
B. Junction box mounting holes pattern
C. ¾-in. FNPT to sensor
D. ¾-in. FNPT to transmitter

3 Calibration

3.1 Sensor calibration

The nominal cell constant of the Rosemount 225 sensor is 3.0/cm. The error in the cell constant after calibration can be +/- 10% of the nominal value. Wall effects (Figure 3-1), will likely make the error greater. Wall effects arise from the interaction between the ionic current in the liquid and nearby metal walls. Metallic walls can add to the ionic current and shift the conductivity reading. As shown in Figure 3-1, a minimum clearance of 1 inch from the wall is needed to mitigate wall effects.

There are two basic ways to calibrate a toroidal sensor: against a standard solution or against a referee meter and sensor. A referee meter and sensor is an instrument that has been previously calibrated and is known to be accurate and reliable. The referee instrument can be used to perform either an in-process or a grab sample calibration. Regardless of the calibration method used, the connected transmitter automatically calculates the cell constant once the known conductivity is entered.

For more detailed information on calibration methods, reference application data sheet ADS-43-025 available on the Emerson Liquid Analysis website.

Figure 3-1: Measured Conductivity as a Function of Clearance between Sensor and Walls

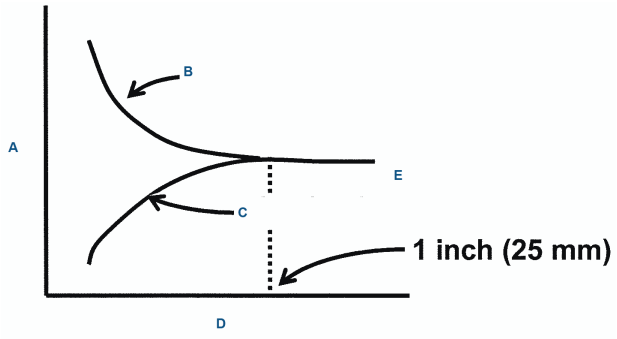

A. Measured conductivity
B. Metal pipe
C. Plastic pipe
D. Distance to wall
E. True conductivity

3.2 Calibrate against a standard solution

Calibration against a standard solution requires removing the sensor from process piping. If wall effects are absent in the process installation or if the sensor clearance from the walls is greater than 1 inch, use a sufficiently large container for calibration to ensure that wall effects during calibration are absent as well. Ideally, the conductivity of the standard used should be close to the middle of the range in which the sensor will be used. Generally, toroidal conductivity sensors have good linearity, and so standards greater than 5000 µS/cm at 77 °F (25 °C) may also be used.

Procedure

1. Remove the sensor from the pipe.
2. Fill a container with the standard solution.

   If wall effects are absent in the process installation, use a sufficiently large container for calibration to ensure that wall effects are absent. To check for wall effects, fill the container with solution and place the sensor in the center, submerged at least ¾ of the way up the stem. Note the reading. Then move the sensor small distances from the center and note the reading in each position. The readings should not change.

   If wall effects are present in the process installation of if the sensor clearance from the walls is less than 1 inch, be sure the calibration vessel used for calibration has exactly the same dimensions as the process piping. It is advisable to use a calibration vessel with the same material of construction as the piping as well. Also, ensure that the orientation of the sensor with respect to the piping is exactly the same in the process and calibration vessels (see Figure 3-2).

Figure 3-2: Calibration Installation Orientation

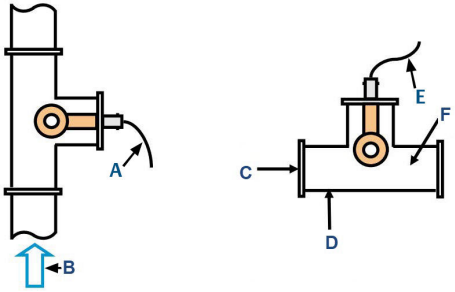

A. Sensor in process piping
B. Flow
C. Blank flange
D. Pipe tee identical to process pipe tee
E. Sensor being calibrated
F. Standard solution

3. Rinse the sensor with water.

4. Immerse the rinsed sensor in the standard solution.

   Allow adequate time for the solution and sensor to reach thermal equilibrium. Using a good quality calibrated thermometer with an error of less than ±1 °C, measure the standard solution temperature.

   If the sensor is being calibrated in an open beaker, keep the thermometer far enough away from the sensor to prevent wall effects.

   If the sensor is being calibrated in a pipe tee or similar vessel, it is impractical to place the thermometer in the standard solution. Instead, put the thermometer in a beaker of water placed next to the callibration vessel. Let both come to thermal equilibrium with the ambient air before continuing calibration (see Figure 3-3).

Figure 3-3: Measuring Standard Temperature

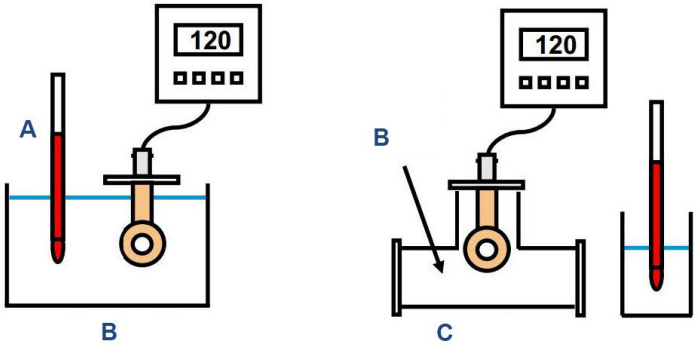

A. Standard thermometer
B. Standard solution
C. Pipe tee

Note
Ensure air bubbles are not adhering to the sensor. An air bubble trapped in the toroid opening severely effects the reading.

5. To eliminate error in the cell constant, turn off automatic temperature compensation in the transmitter.
6. Adjust the transmitter reading to match the conductivity of the standard.

3.3 Calibrate in-process

Prerequisites

If possible, adjust the conductivity of the process liquid so that it is near the midpoint of the operating range. If this is not possible, adjust the conductivity so that it is at least 5000 µS/cm.

Turn off automatic temperature compensation in the transmitter. This eliminates error in the cell constant.

Procedure

1. Connect the process and referee sensors in a series.

   Keep tubing runs between the sensors short and adjust the sample flow to as high a rate as possible. Short tubing runs and high flow ensure that the temperature of the liquid does not change as it flows from one sensor to another.

2. Allow the process liquid to flow through both sensors.

   Orient the referee sensor so that the air bubbles always have an easy escape path and cannot get trapped. Tap and hold the flow cell in different positions to allow bubbles to escape.

   Wait for readings to stabilize before starting the calibration.

3. Adjust the process sensor to match the conductivity measured by the referee instrument (see Figure 3-4).

Figure 3-4: Calibration with a Referee Instrument Example

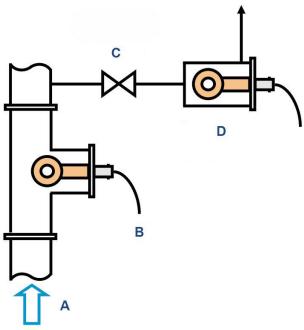

A. Flow
B. Sensor in process piping
C. Sample valve
D. Referee sensor in flow cell

3.4 Calibrate a grab sample

This method is useful when calibration against a standard is impractical or when in-process calibration is not feasible, because the sample is hot, corrosive, or dirty, making handling the waste stream from the referee sensor difficult.

Procedure

1. Take a sample of the process liquid.
    a) Take the sample from a point as close to the process sensor as possible.
    b) Be sure the sample is representative of what the sensor is measuring. If possible, adjust the conductivity of the process liquid so that it is near the midpoint of the operating range.
    c) If that is not possible, adjust the conductivity so that it is at least 5000 µS/cm.
2. Connect the process and referee sensors.
    a) Keep temperature compensation with the transmitter turned on.
    b) Confirm that the temperature measurements in both process and referee instruments are accurate, ideally to within ±0.5 °C.
3. Place the sensors in the grab sample.
    Wait until the readings are stable before starting the calibration.
4. Adjust the reading from the process analyzer to match the conductivity measured by the referee sensor.

4 Maintenance and troubleshooting

4.1 Maintaining the sensor

⚠ WARNING

TOXIC LIQUIDS

Ensure the sensor has been cleaned of process liquid before handling.

Generally, the only maintenance required is to keep the opening of the sensor clear of deposits. Cleaning frequency is best determined by experience.

4.2 Troubleshoot

4.2.1 Off-scale reading

Potential cause

Wiring is incorrect.

Recommended action

Verify and correct wiring.

Potential cause

Temperature element is open or shorted.

Recommended action

Check temperature element for open or short circuits.

See Figure 4-1 or Figure 4-2.

Figure 4-1: Resistance Check for Rosemount 225-54

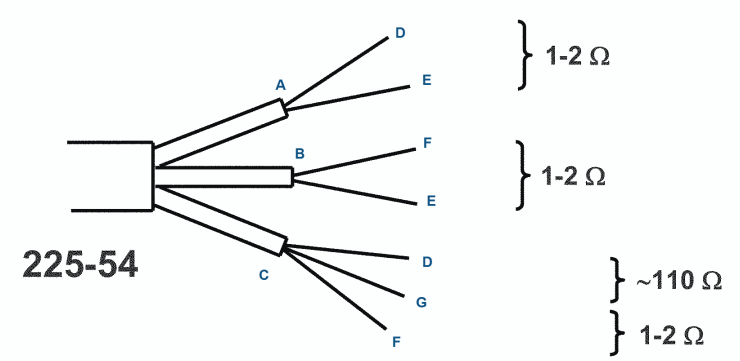

Disconnect leads from transmitter before measuring resistances.

A. Receive
B. Drive
C. Resistance Temperature Device (RTD)
D. Green
E. Black
F. White
G. Clear

Resistance between shield and any other wire: >40 MΩ

Figure 4-2: Resistance check for Rosemount 225-56

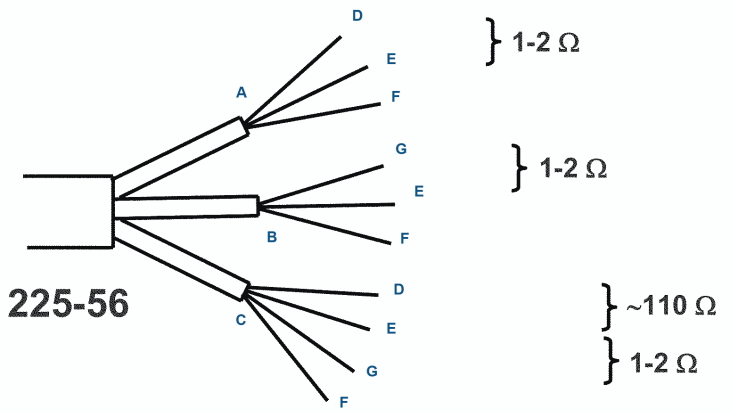

A. Receive
B. Drive
C. RTD
D. Green
E. Black
F. Clear
G. White

Resistance between shield and any other wire: > 40 MΩ

Potential cause

Sensor is not in process stream.

Recommended action

Submerge sensor completely in process stream.
See Installation.

Potential cause

Sensor is damaged.

Recommended action

Perform isolation checks.
See Figure 4-1 or Figure 4-2.

4.2.2 Noisy reading

Potential cause

Sensor is improperly installed in process stream.

Recommended action

Submerge sensor completely in process stream.

See Installation.

Potential cause

Sensor cable is run near high voltage process stream.

Recommended action

Move cable away from high voltage conductors.

Potential cause

Sensor cable is moving.

Recommended action

Keep sensor cable stationary.

4.2.3 Reading seems wrong (lower or higher than expected)

Potential cause

Bubbles trapped in sensor.

Recommended actions

1. Install the sensor in a vertical pipe run with the flow against the toroidal opening.
2. Increase flow if possible.

Potential cause

Sensor is not completely submerged in the process stream.

Recommended action

Confirm that the sensor is fully submerged in the process stream.

See Installation.

Potential cause

Cell constant is wrong. Wall effects are present.

Recommended action

Calibrate the sensor in place in the process piping.

See Calibration.

Potential cause

Wrong temperature correction algorithm is being used.

Recommended action

Check that the temperature correction is appropriate for the sample.

See transmitter Reference Manual for more information.

Potential cause

Temperature reading is inaccurate.

Recommended action

Disconnect the resistance temperature device leads and measure the resistance between the in and common leads.

See Figure 4-1 or Figure 4-2.

Resistance should be close to the value in Table 4-1.

Table 4-1: Resistance vs. Temperature for Temperature Compensation (PT-100 RTD)

Temperature	Resistance
50 °F (10 °C)	103.9 Ω
68 °F (20 °C)	107.8 Ω
77 °F (25 °C)	109.7 Ω
86 °F (30 °C)	111.7 Ω
104 °F (40 °C)	115.5 Ω
122 °F (50 °C)	119.4 Ω

Potential cause

The temperature response to sudden changes in temperature is slow.

Recommended action

Use a Resistance Temperature Device (RTD) in a metal thermowell for temperature compensation.

4.2.4 Sluggish response

Potential cause

Sensor is installed in dead area in piping.

Recommended action

Move sensor to a location more representative of the process liquid.

Potential cause

Slow temperature response to sudden changes in temperature.

Recommended action

Use a resistance temperature device in a metal thermowell for temperature compensation.

5 Accessories

Accessory list

Part number	Description
23550-00	Remote junction box without preamplifier
23294-00	Unshielded interconnecting cable for Rosemount 1054A, 1054B, and 2054C. Can also be used with Rosemount 1056, 56, 5081, and 1066-T, but not recommended. Prepped, specify length, per ft.
23294-05	Shielded interconnecting cable with additional shield wire for -03 option. For use with Rosemount 1056, 1066-T, 56, and 5081T. Prepped, specify length, per ft.
9200276	Extension cable, unprepped (specify length) per ft.

Spare Parts

6 Return of materials

For repair and warranty inquiries, contact Rosemount Customer Care to obtain a Return Material Authorization (RMA) number.

Note
Drain the sensor and thoroughly rinse it before shipping back to Emerson.

Quick Start Guide
00825-0100-3225, Rev. AD
May 2025

For more information: **Emerson.com/global**

©2025 Emerson. All rights reserved.

Emerson Terms and Conditions of Sale are available upon request. The Emerson logo is a trademark and service mark of Emerson Electric Co. Rosemount is a mark of one of the Emerson family of companies. All other marks are the property of their respective owners.

ROSEMOUNT™

EMERSON™