ABB MEASUREMENT & ANALYTICS | DATA SHEET

Model M26

Manifold line for 266 pressure transmitters

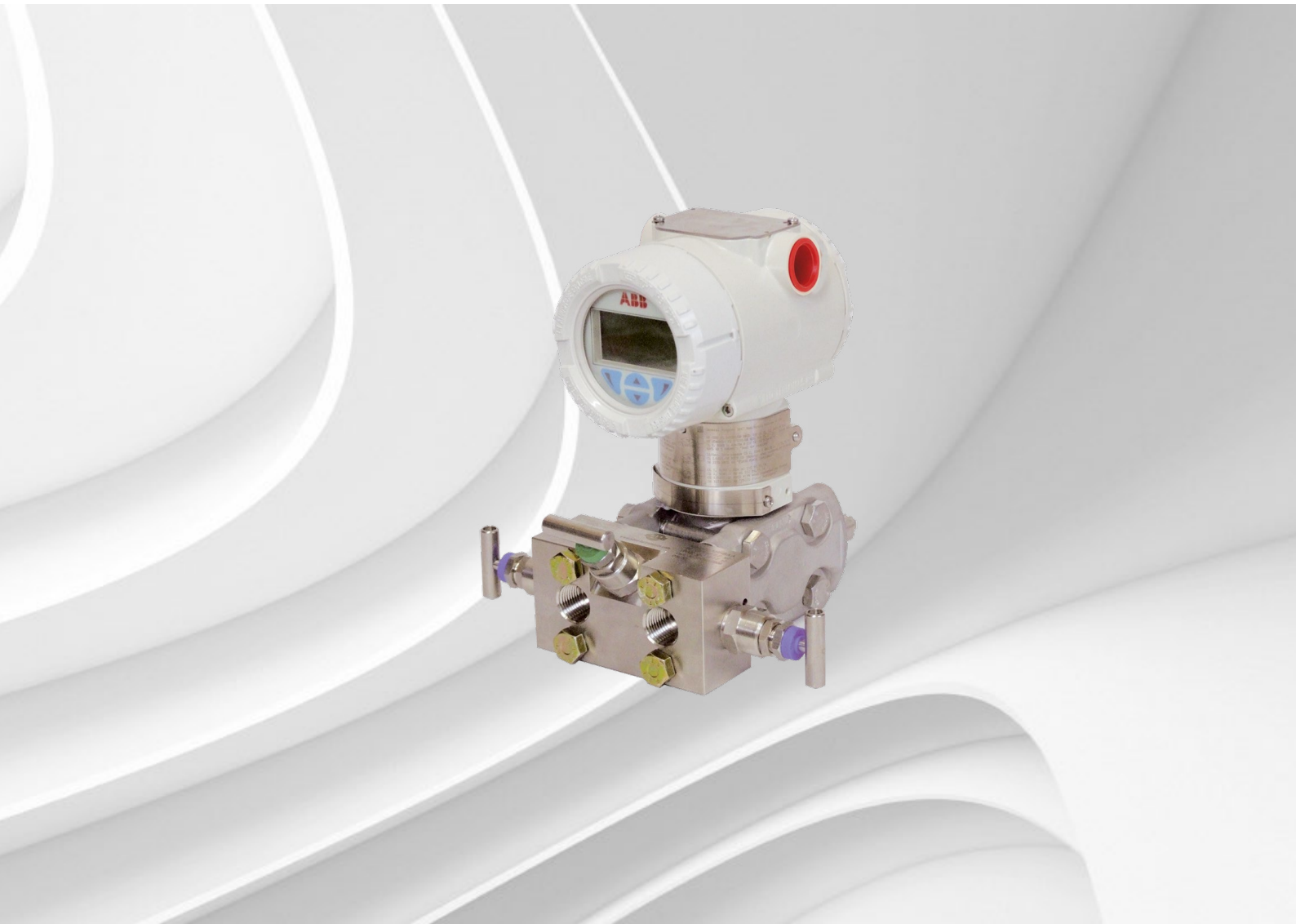

Measurement made easy

Engineered solutions for all applications

Comprehensive wetted material portfolio

Accessories available

- Bolts and brackets allow multiple installations and grant full transmitter support

Tee bars easily manoeuvrable

Tailored manifold to meet user’s needs

Perfect interface

- between process and transmitter thanks to the most common connection types

Colour coded functional identification

Functional specifications

Manifold pressure rating vs. process temperature: Standard PTFE packing and gaskets

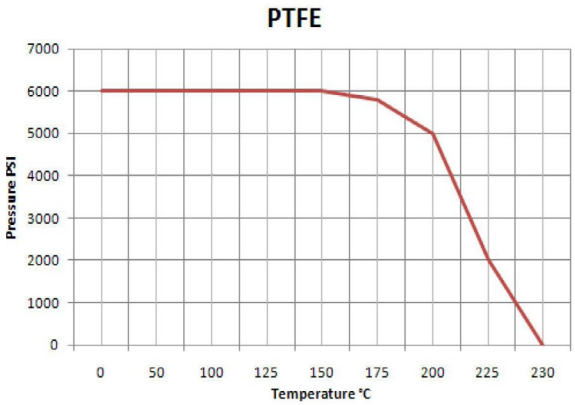

PTFE properties

Mechanical properties

PTFE has good tensile properties different from other plastic materials as it may be used over a wide temperature range from – 250°C to +250°C (-418°F to +482°F) . PTFE shows the lowest friction values compared to other plastic materials. Furthermore, being the static friction values almost equal to the dynamic friction values, there is no tendency to seizure within a sliding system situation, and therefore no detachment friction.

Electrical properties

PTFE has very good electrical properties. Dielectric strength is excellent and remains unchanged even at high temperature, it only decreases depending on the material thickness and on the electrical frequency values. Dielectric constant values and dissipation factor are among the lowest values and remain unchanged even at high temperatures and at a wide frequency range. Good resistance to arc and corona effect.

Other properties

PTFE surfaces are highly anti adhesive and do not absorb moisture. PTFE is non-toxic and can be used in contact with food. There are some limitations only for some kinds of filled PTFE due to the toxicity of some filling elements (i.e. heavy metals and its compounds) .

External agents resistance

PTFE is considered inert towards nearly all known chemical elements and it is insoluble in all solvents. It is only attached by elemental alkali metals, and by Chlorine Trifluoride and elemental Fluorine at high temperatures and pressures. Fluorinated hydrocarbons can have a swelling effect on PTFE but it is a reversible situation, while some fluorinated oils, around 300°C (5 72°F) temperature, swell and
dissolve PTFE. PTFE is completely untouched by light and atmospheric agents. Its resistance to nuclear radiations is rather low, it is affected by it starting from 105 rad. with a lowering of the tensile properties.

Manifold pressure rating vs. process temperature: optional Graphoil packing and gaskets

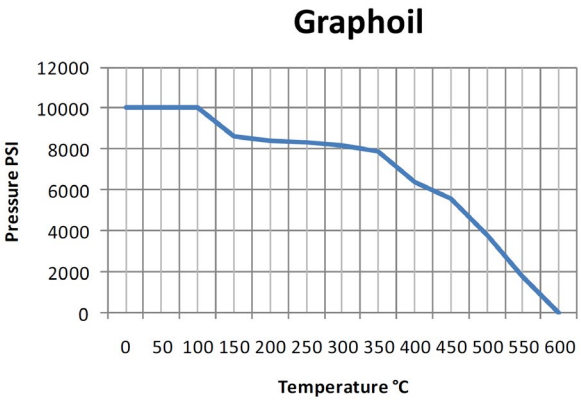

Graphoil properties

Mechanical properties

Graphoil may be used over a wide temperature range from – 250°C to +600°C (-400°F to +1112°F) .
It features high resistance to corrosion, heat and fire.
Graphoil is generally used in high temperature processes where thermal and/or mechanical shocks can occur.
It provides an excellent seal even with low torques or irregular flange surfaces.

Other properties

Graphoil is a packing and gasket material made exclusively from natural graphite flake.
Its high degree of chemical compatibility makes Graphoil inert to most chemicals and gases with the exception of strong oxidizing agents.

...Functional specifications

Standard supplied parts

M26 manifolds are always supplied with:

- PTFE gaskets for transmitter connection (for flanged models)
- 1 or 2 Plugs 1/4“ NPT-M (according to the selected model)
- Carbon Steel bolts
- Certificate of compliance with the order EN10204-2.1
- Inspection certificate EN 10204-3.1 of process wetted parts.

Important

Please ask for a supplementary check if your application is close to the limits shown in the above picture (230°C and/ or 6000 psi).

Important

The maximum working temperature of the whole assembly (manifold and instrument) corresponds to the temperature limit of the pressure transmitter.

Important

When the manifold is assembled to a 2600T pressure transmitter with NACE compliance A4-50 Stainless Steel bolts (available on request), please note that the maximum working pressure is limited to 210 bar (3045 psi).

Specification – physical

(Refer to ordering information sheets for variant availability related to specific model or versions code)

Materials

Body, bonnet and nut

AISI 316 L ss; Hastelloy C-276™; Monel 400™; Inconel 625

Mounting bracket (*)

Zinc plated carbon steel; AISI 316 L ss.

Gaskets

PTFE, other available on request.

Bolts

Zinc plated carbon steel; AISI 316 ss bolts and nuts Class A4–50 per UNI 7323 (ISO 3506), in compliance with NACE MR0175 Class II (as option).

(*) The mounting bracket kit contains:
bracket, U-bolts, cap screws, nuts, lock washers, spacers and assembling instruction.

Configuration

Two-valve manifold configurations

(Refer to ordering information sheets for options related to specific model or versions code)

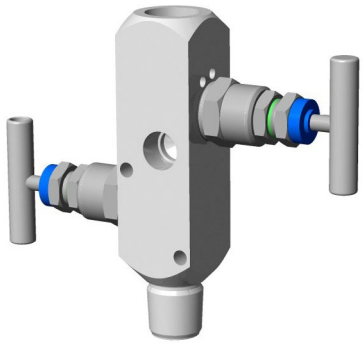

M26.P.A.S.2.V. - Two-valve bar stock manifold. Threaded connections	
Inlet (process connection)	1/2 in. - 14 NPT male
Outlet (transmitter side)	1/2 in. - 14 NPT female
Drain	1/4 in. - 18 NPT female
Packing	PTFE
Rating	690 bar (69 MPa, 10000 psi)
Included accessory	1 plug 1/4 in. - 18 NPT male

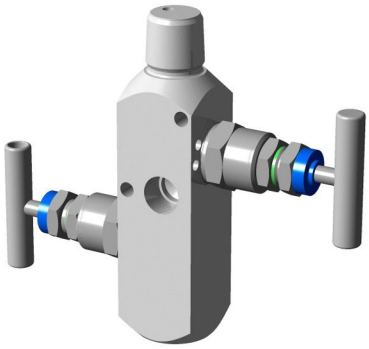

M26.P.A.S.2.V. - Two-valve bar stock manifold. Threaded connections	
Inlet (process connection)	1/2 in. - 14 NPT female
Outlet (transmitter side)	1/2 in. - 14 NPT male
Drain	1/4 in. - 18 NPT female
Packing	PTFE
Rating	690 bar (69 MPa, 10000 psi)
Included accessory	1 plug 1/4 in. - 18 NPT male

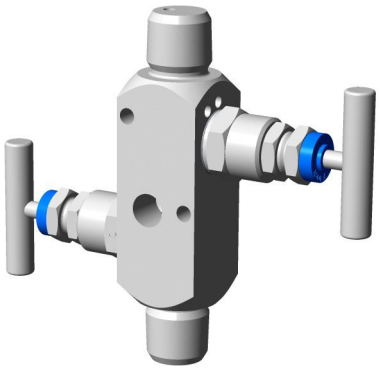

M26.P.A.S.2.V. - Two-valve bar stock manifold. Threaded connections	
Inlet (process connection)	1/2 in. - 14 NPT male
Outlet (transmitter side)	1/2 in. - 14 NPT female
Drain	1/4 in. - 18 NPT female
Packing	PTFE
Rating	690 bar (69 MPa, 10000 psi)
Included accessory	1 plug 1/4 in. - 18 NPT male

Note:
For details about the correct codification of each single model of manifold, please refer to the ordering information at the end of this document.

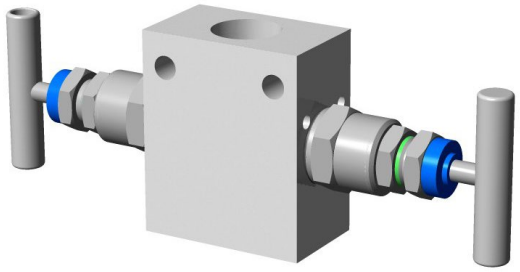

M26.P.A.S.2.V. - Two-valve bar stock manifold. Threaded connections	
Inlet (process connection)	1/2 in. - 14 NPT female
Outlet (transmitter side)	1/2 in. - 14 NPT female
Drain	1/4 in. - 18 NPT female
Packing	PTFE
Rating	690 bar (69 MPa, 10000 psi)
Included accessory	1 plug 1/4 in. - 18 NPT male

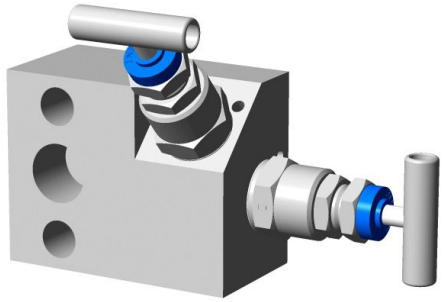

M26.D.A.S.2.V. - Two-valve bar stock manifold for DP Style transmitters	
Body configuration	For standard flanges transmitters
Inlet (process connection)	1/2 in. - 14 NPT female
Outlet (transmitter side)	Flanged according IEC61518/B
Drain	1/4 in. - 18 NPT female
Packing	PTFE
Rating	413.3 bar (41.37 MPa, 6000 psi)
Included accessory	1 plug 1/4 in. - 18 NPT male 1 PTFE gasket for transmitter flanged side (IEC61518/B) 2 Carbon steel screws 7/16 in. UNF (length 2 in.)

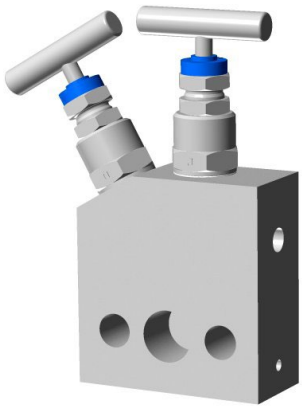

M26.D.A.V.2.V. - Two-valve bar stock manifold for DP Style transmitters	
Body configuration	For vertical flanges transmitters
Inlet (process connection)	1/2 in. - 14 NPT female
Outlet (transmitter side)	Flanged according IEC61518/B
Drain	1/4 in. - 18 NPT female
Packing	PTFE
Rating	413.3 bar (41.37 MPa, 6000 psi)
Included accessory	1 plug 1/4 in. - 18 NPT male 1 PTFE gasket for transmitter flanged side (IEC61518/B) 2 Carbon steel screws 7/16 in. UNF (length 1 3/4 in.)

Note:
For details about the correct codification of each single model of manifold, please refer to the ordering information at the end of this document.

...Configuration

Three-valve manifold configurations

(Refer to ordering information sheets for options related to specific model or versions code)

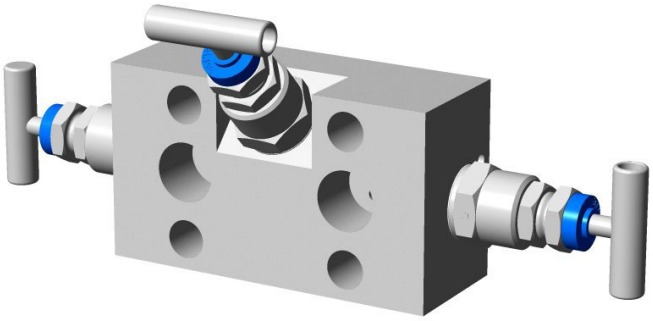

M26.D.A.S.3.V. - Three-valve bar stock manifold for DP transmitters	
Body configuration	For standard flanges transmitters
Inlet (process connection)	1/2 in. - 14 NPT female
Outlet (transmitter side)	Flanged according IEC61518/B
Drain	1/4 in. - 18 NPT female
Packing	PTFE
Rating	413.3 bar (41.37 MPa, 6000 psi)
Included accessories	2 plug 1/4 in. - 18 NPT male
	2 PTFE gasket for transmitter flanged side (IEC61518/B)
	4 Carbon steel screws 7/16 in. UNF (length 2 in.)

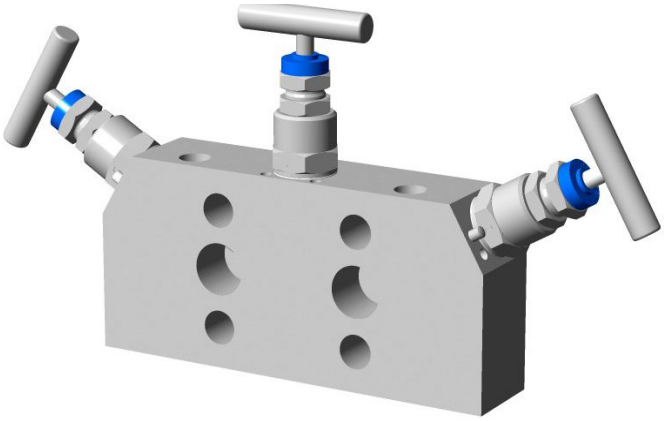

M26.D.A.V.3.V. - Three-valve bar stock manifold for DP transmitters	
Body configuration	For vertical flanges transmitters
Inlet (process connection)	1/2 in. - 14 NPT female
Outlet (transmitter side)	Flanged according IEC61518/B
Drain	1/4 in. - 18 NPT female
Packing	PTFE
Rating	413.3 bar (41.37 MPa, 6000 psi)
Included accessories	2 plug 1/4 in. - 18 NPT male
	2 PTFE gasket for transmitter flanged side (IEC61518/B)
	4 Carbon steel screws 7/16 in. UNF (length 1 3/4 in.)

Note:
For details about the correct codification of each single model of manifold, please refer to the ordering information at the end of this document.

Three-valve manifold configurations

(Refer to ordering information sheets for options related to specific model or versions code)

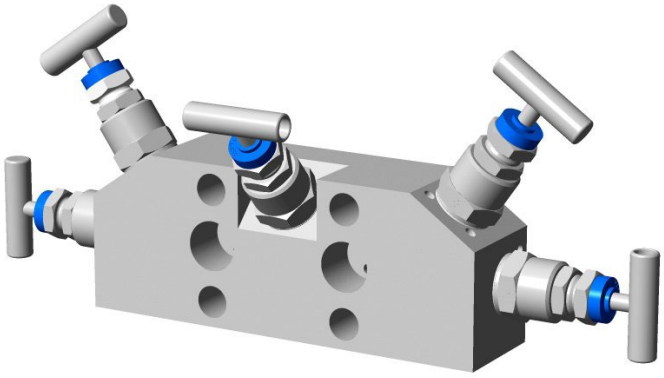

M26.D.A.S.5.V. - Five-valve bar stock manifold for DP transmitters	
Body configuration	For standard flanges transmitters
Inlet (process connection)	1/2 in. - 14 NPT female
Outlet (transmitter side)	Flanged according IEC61518/B
Drain	1/4 in. - 18 NPT female
Packing	PTFE
Rating	413.3 bar (41.37 MPa, 6000 psi)
Included accessories	2 plug 1/4 in. - 18 NPT male
	2 PTFE gasket for transmitter flanged side (IEC61518/B)
	4 Carbon steel screws 7/16 in. UNF (length 2 in.)

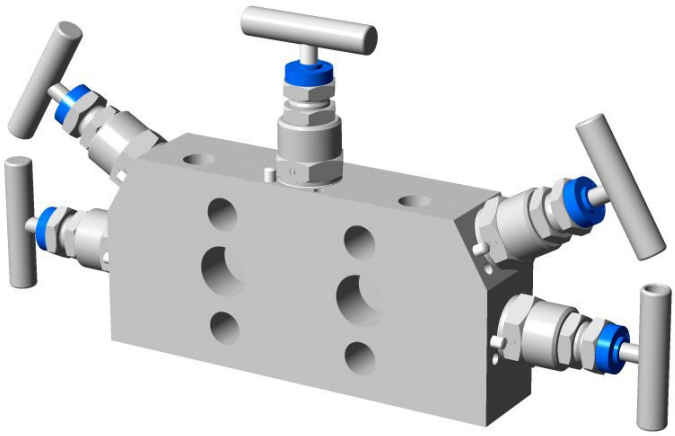

M26.D.A.V.5.V. - Five-valve bar stock manifold for DP transmitters	
Body configuration	For vertical flanges transmitters
Inlet (process connection)	1/2 in. - 14 NPT female
Outlet (transmitter side)	Flanged according IEC61518/B
Drain	1/4 in. - 18 NPT female
Packing	PTFE
Rating	413.3 bar (41.37 MPa, 6000 psi)
Included accessories	2 plug 1/4 in. - 18 NPT male
	2 PTFE gasket for transmitter flanged side (IEC61518/B)
	4 Carbon steel screws 7/16 in. UNF (length 1 3/4 in.)

Note:
For details about the correct codification of each single model of manifold, please refer to the ordering information at the end of this document.

Mounting dimensions

(not for construction unless certified) – dimensions in mm (inch)

M26.P.A.S.2.V. Two-valve manifold with threaded connection (1/2 in. - 14 NPT male inlet and 1/2 in. - 14 NPT female outlet); pressure rating 690 bar (69 MPa, 10000 psi)

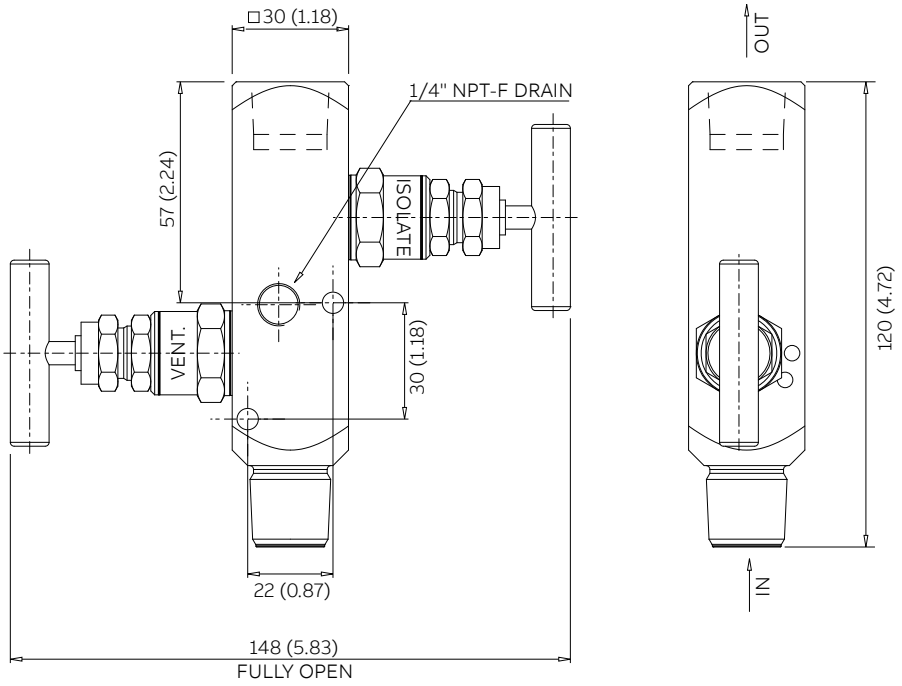

M26.P.A.S.2.V. Two-valve manifold with threaded connection (1/2 in. - 14 NPT female inlet and 1/2 in. - 14 NPT male outlet); pressure rating 690 bar (69 MPa, 10000 psi)

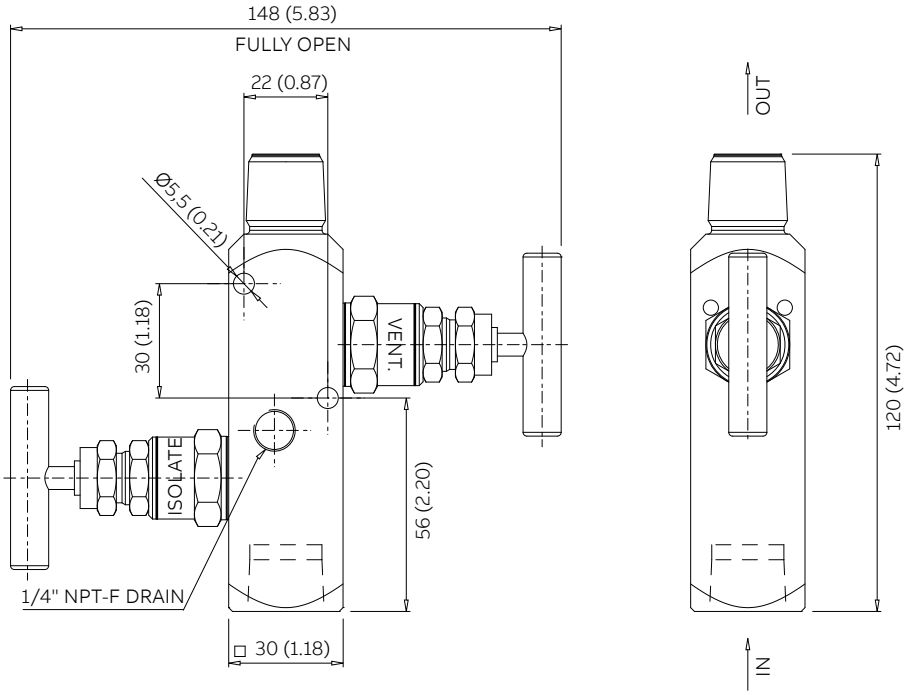

M26.P.A.S.2.V. Two-valve manifold with threaded connection (1/2 in. - 14 NPT male inlet and outlet); pressure rating 690 bar (69 MPa, 10000 psi)

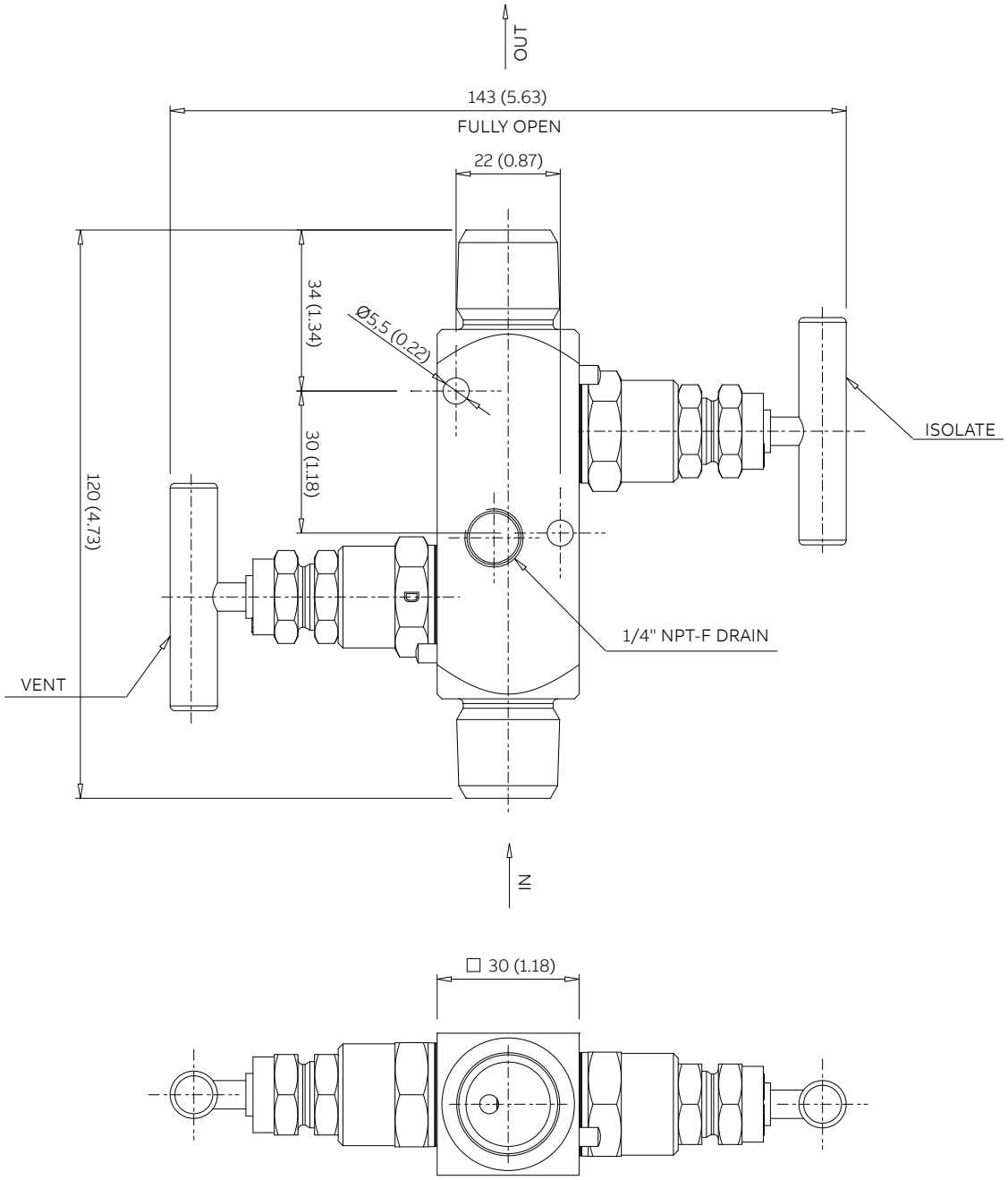

...Mounting dimensions

(not for construction unless certified) – dimensions in mm (inch)
M26.P.A.S.2.V. Two-valve manifold with threaded connection (1/2 in. - 14 NPT female inlet and female outlet); pressure rating 690 bar (69 MPa, 10000 psi)

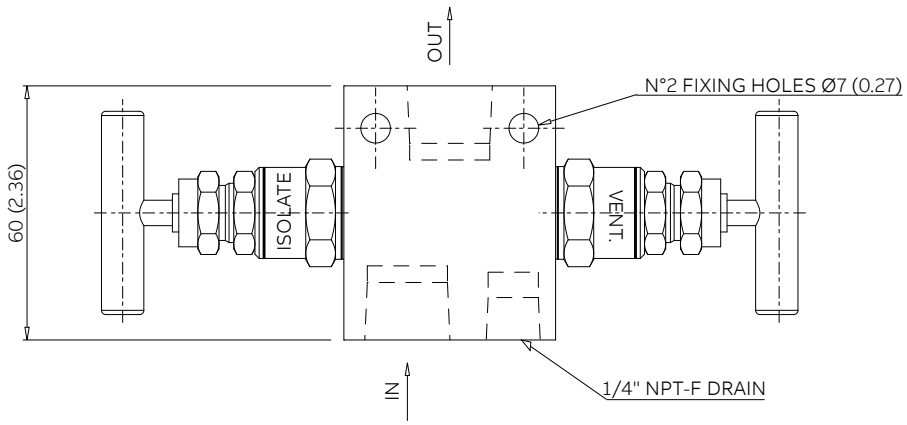

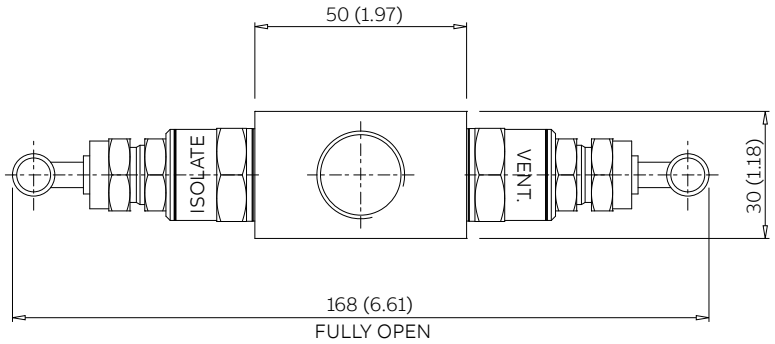

M26.D.A.V.2.V. Two-valve manifold for vertical flanges DP Style transmitters; 1/2 in. - 14 NPT female threaded inlet and flanged outlet according to IEC 61518/B (transmitter side); pressure rating 413.7 bar (41.37 MPa, 6000 psi).

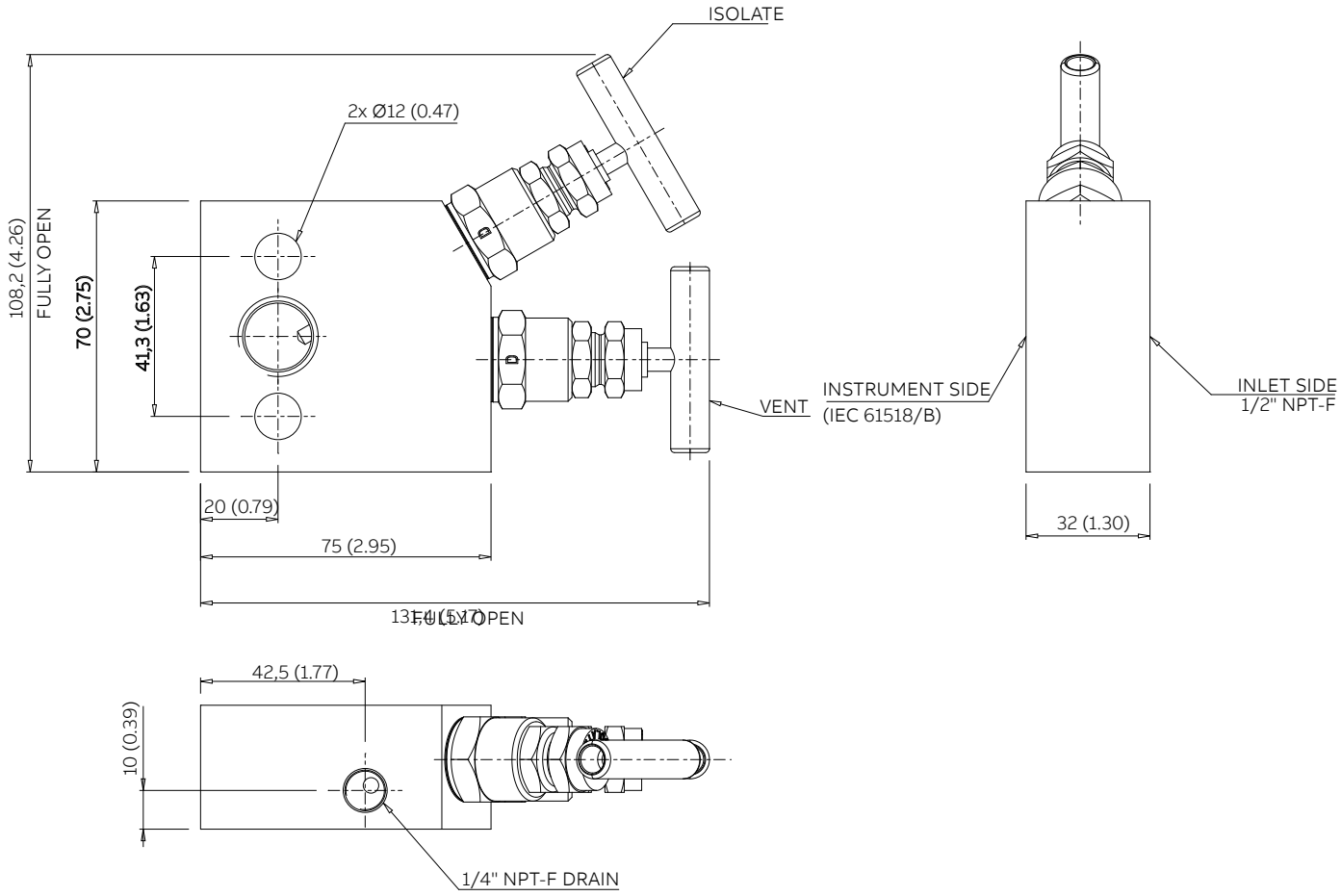

...Mounting dimensions

(not for construction unless certified) – dimensions in mm (inch)

M26.D.A.S.2.V. Two-valve manifold for standard flanges DP Style transmitters; 1/2 in. - 14 NPT female threaded inlet and flanged outlet according to IEC 61518/B (transmitter side); pressure rating 413.7 bar (41.37 MPa, 6000 psi).

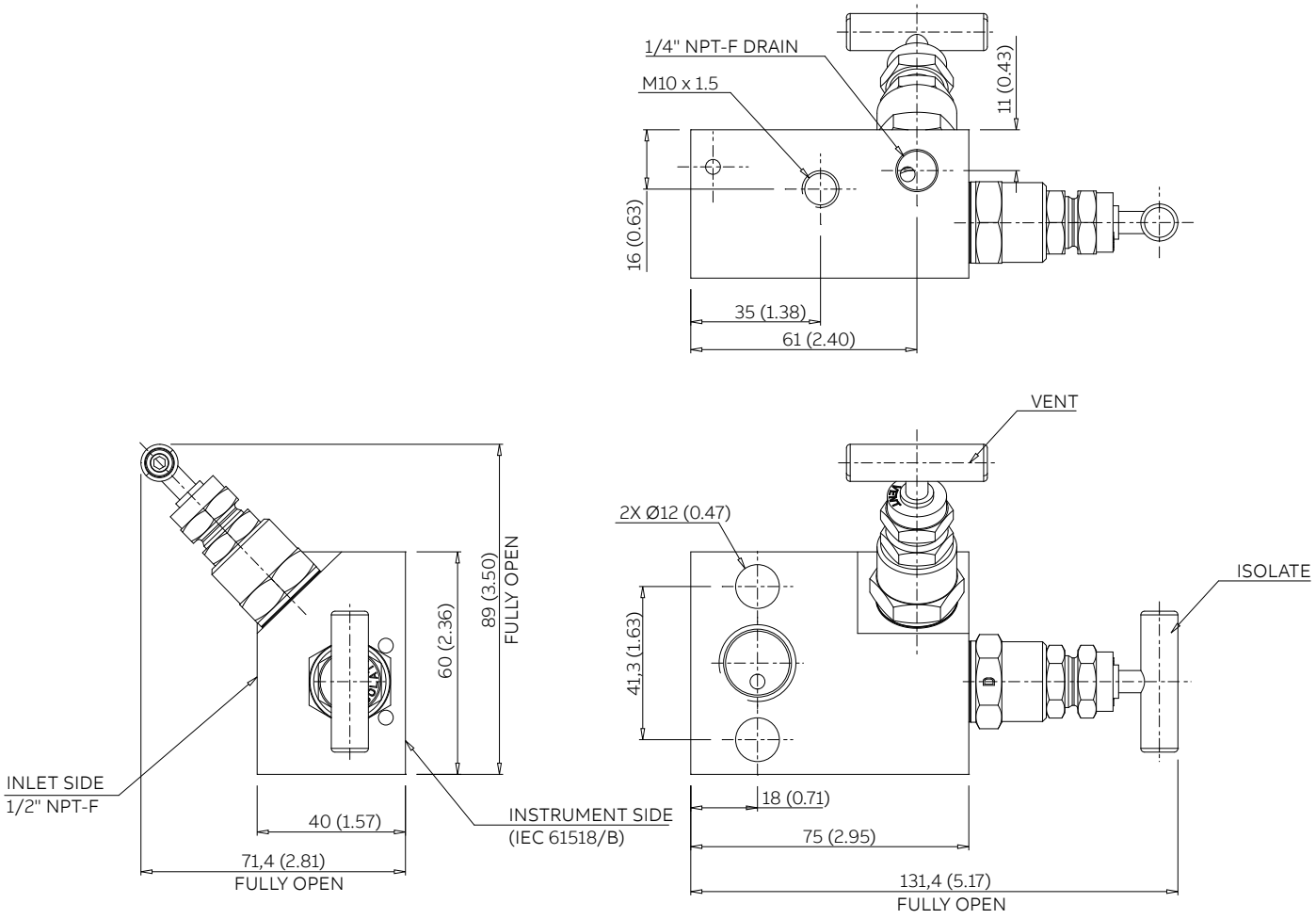

M26.D.A.S.3.V. Three-valve manifold for standard flanges DP Style transmitters; 1/2 in. - 14 NPT female threaded inlet and flanged outlet according to IEC 61518/B (transmitter side); pressure rating 413.7 bar (41.37 MPa, 6000 psi).

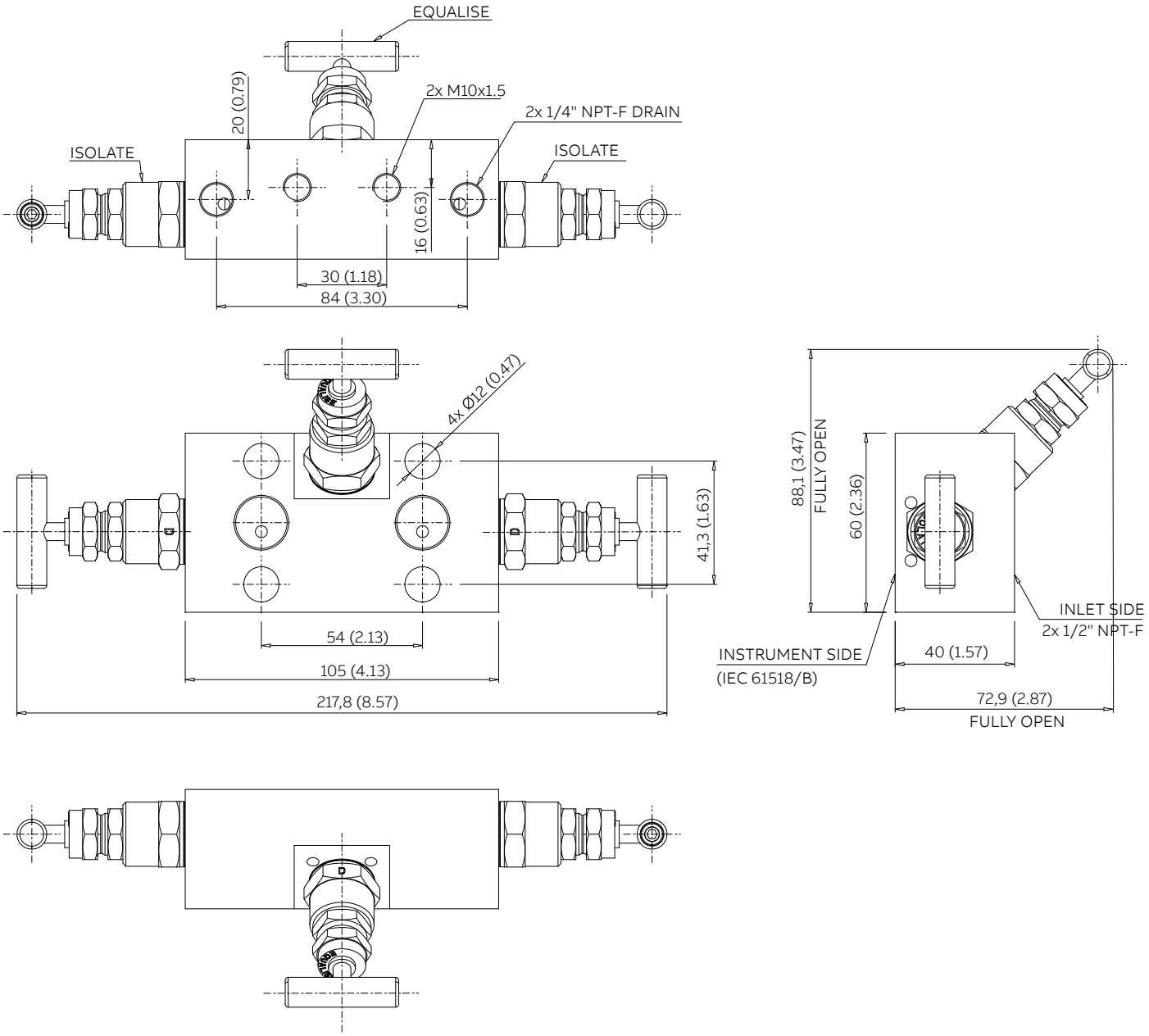

...Mounting dimensions

(not for construction unless certified) – dimensions in mm (inch)

M26.D.A.V.3.V. Three-valve manifold for vertical flanges DP Style transmitters; 1/2 in. - 14 NPT female threaded inlet and flanged outlet according to IEC 61518/B (transmitter side); pressure rating 413.7 bar (41.37 MPa, 6000 psi).

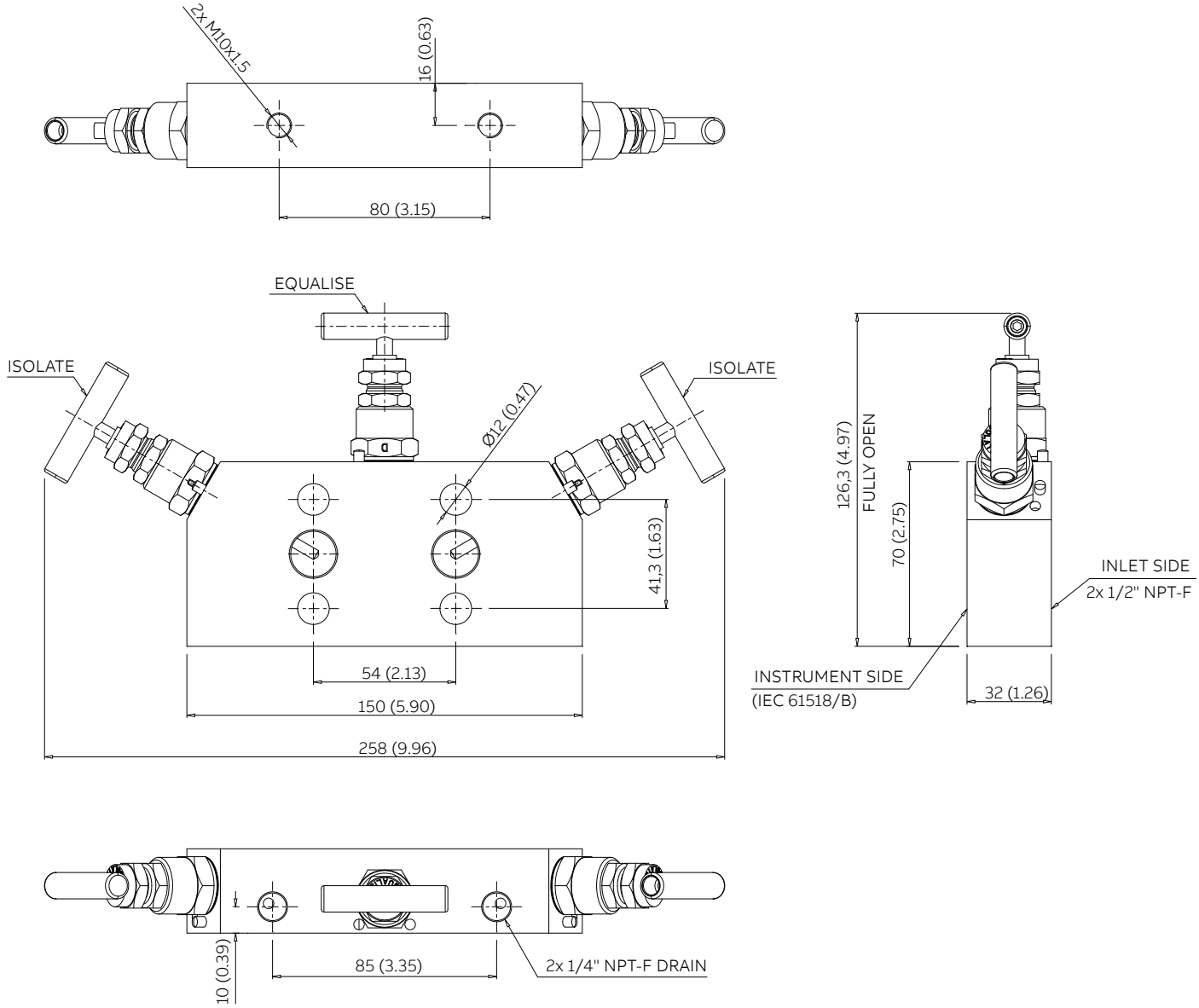

M26.D.A.S.5.V. Five-valve manifold for standard flanges DP Style transmitters; 1/2 in. - 14 NPT female threaded inlet and flanged outlet according to IEC 61518/B (transmitter side); pressure rating 413.7 bar (41.37 MPa, 6000 psi).

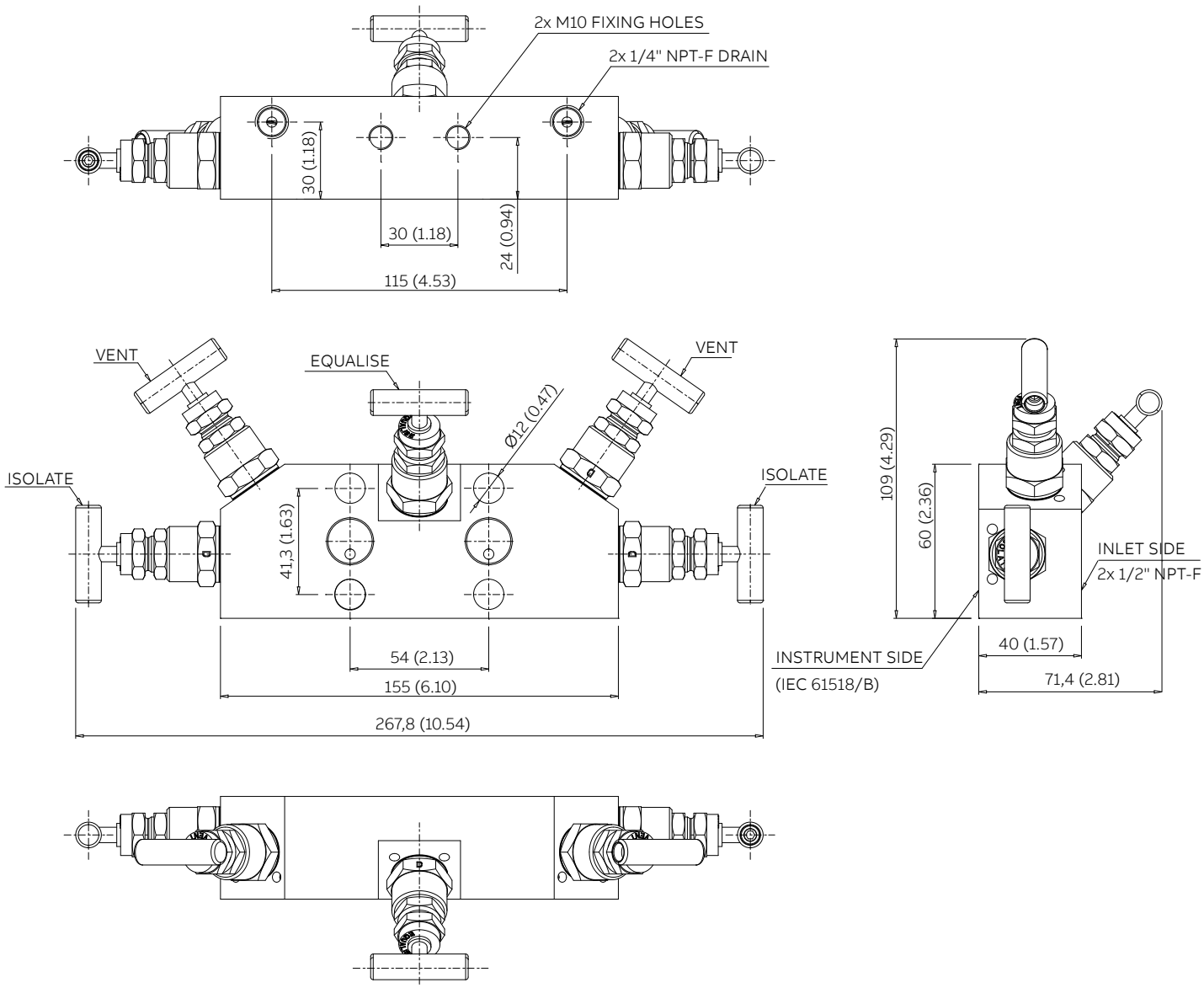

...Mounting dimensions

(not for construction unless certified) – dimensions in mm (inch)

M26.D.A.V.5.V. Five-valve manifold for vertical flanges DP Style transmitters; 1/2 in. - 14 NPT female threaded inlet and flanged outlet according to IEC 61518/B (transmitter side); pressure rating 413.7 bar (41.37 MPa, 6000 psi).

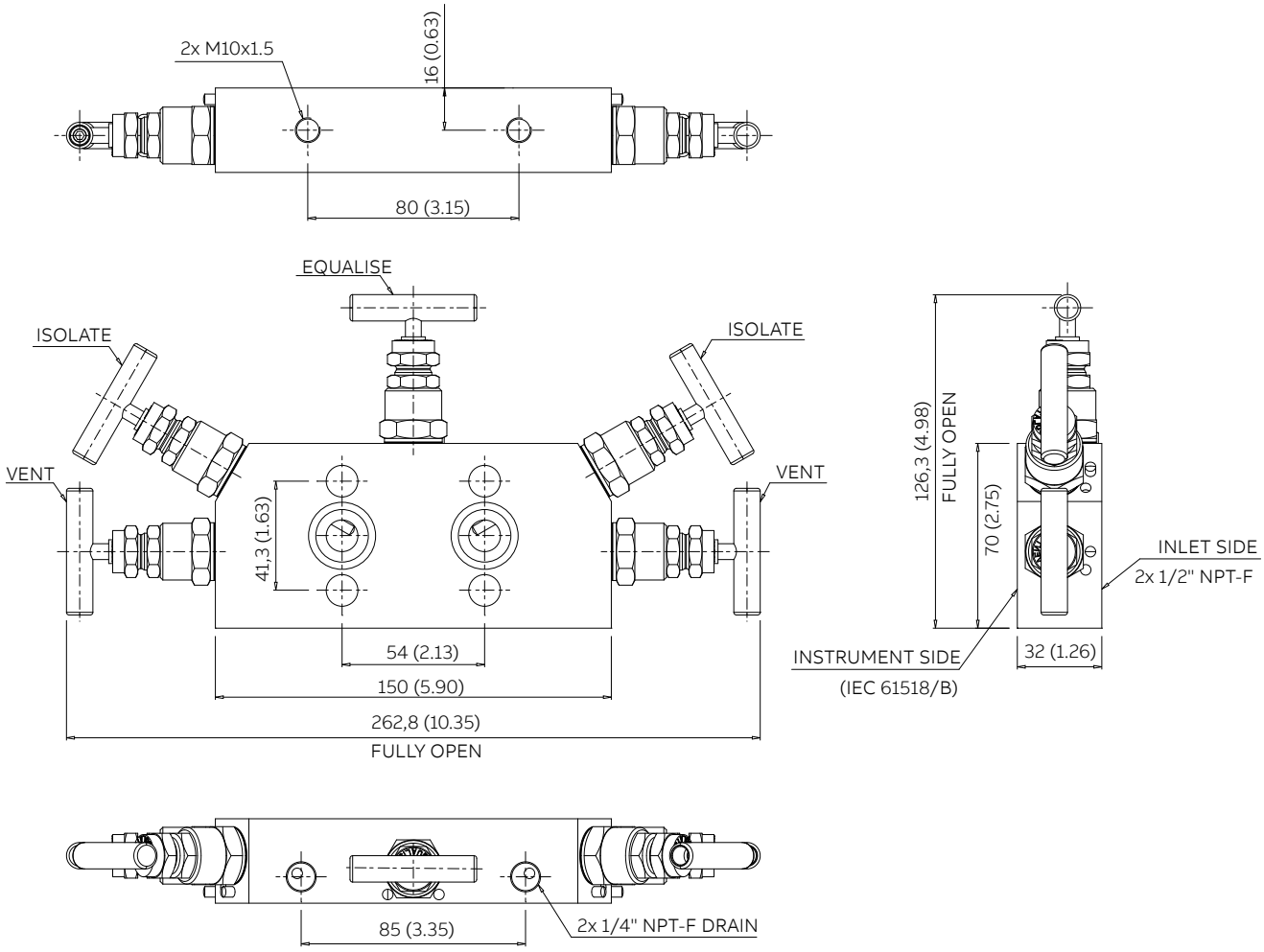

Gauge or absolute pressure transmitter (266HSH, 266GSx, 266ASx) on its mounting bracket with M26.P.A.S.2.V. (1/2 in. - 14 NPT male inlet and 1/2 in. - 14 NPT female outlet threaded connection).

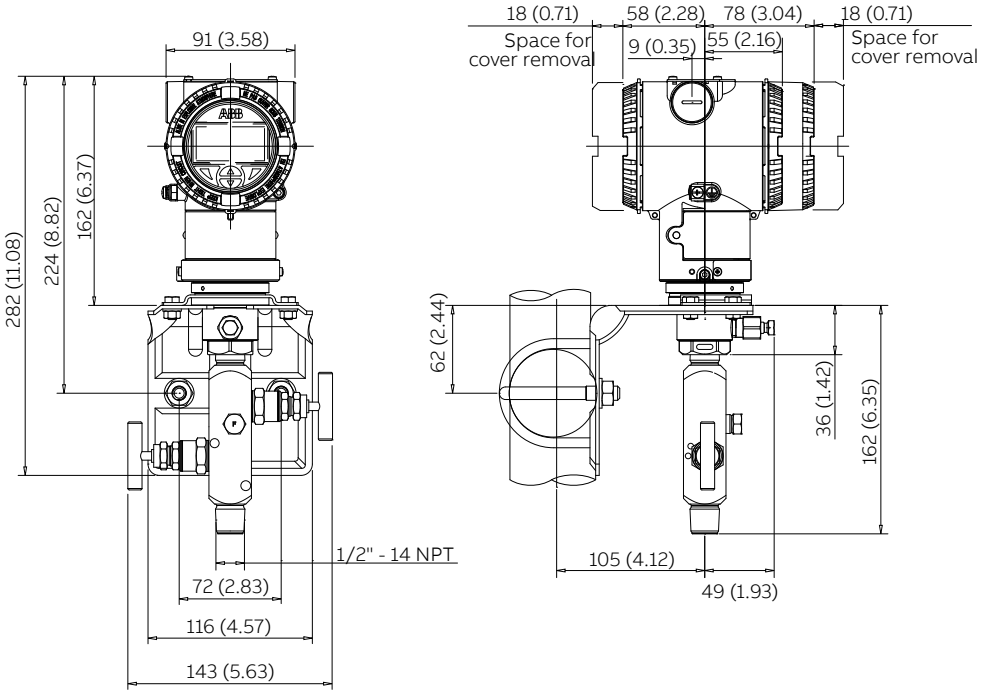

Gauge or absolute pressure transmitter (266HSH, 266GSx, 266ASx) on its mounting bracket with M26.P.A.S.2.V. (1/2 in. - 14 NPT female inlet and 1/2 in. - 14 NPT male outlet threaded connection).

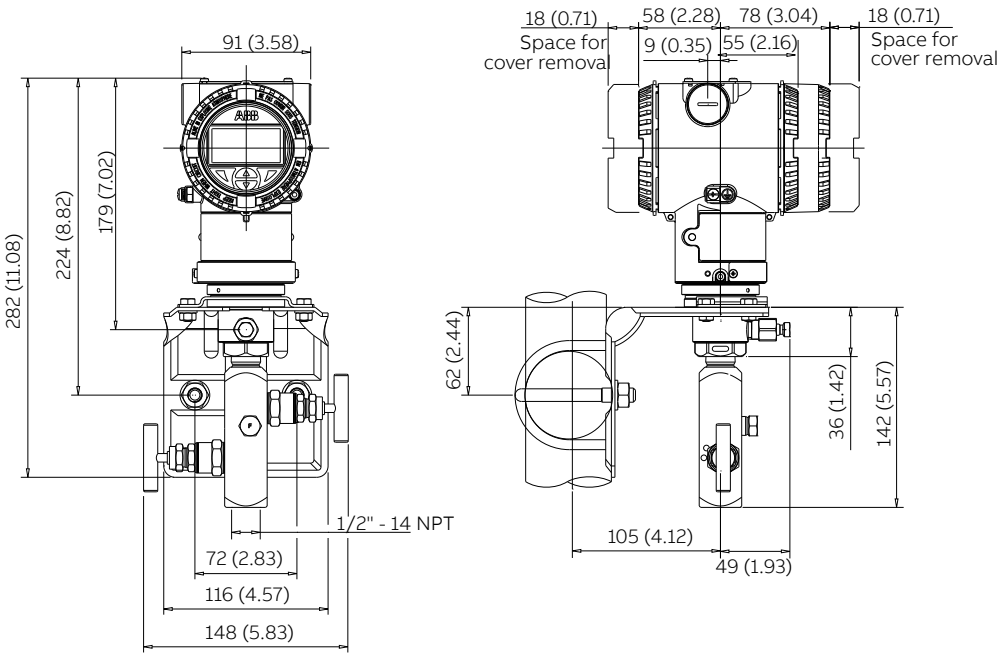

...Mounting dimensions

(not for construction unless certified) – dimensions in mm (inch)

Gauge or absolute pressure transmitter (266HSH, 266GSx, 266ASx) on its mounting bracket with M26.P.A.S.2.V. (1/2 in. - 14 NPT male inlet and outlet threaded connection).

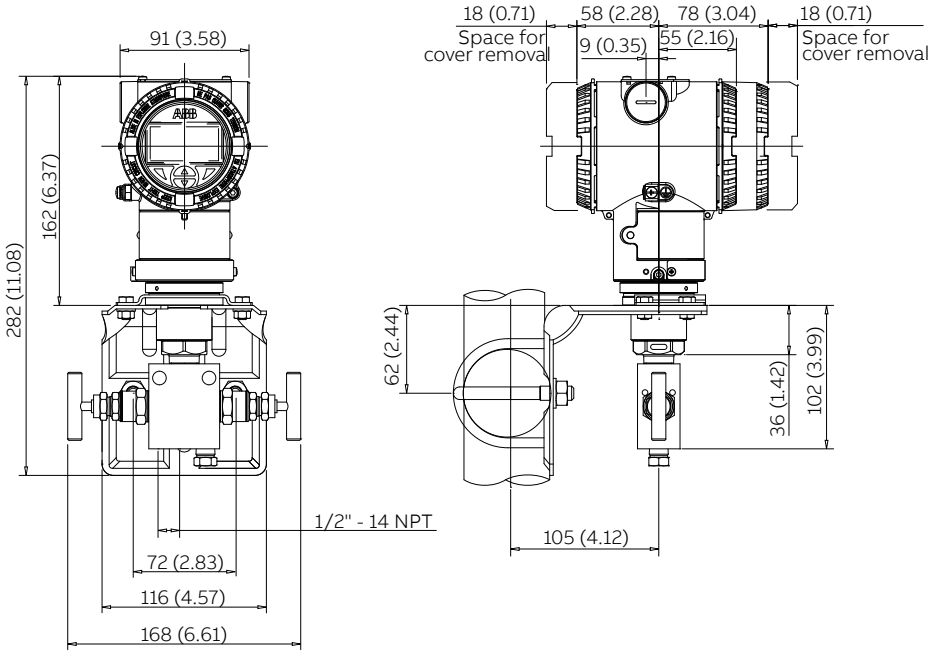

Gauge or absolute pressure transmitter (266HSH, 266GSx, 266ASx) on its mounting bracket with M26.P.A.S.2.V. (1/2 in. - 14 NPT female inlet and outlet threaded connection).

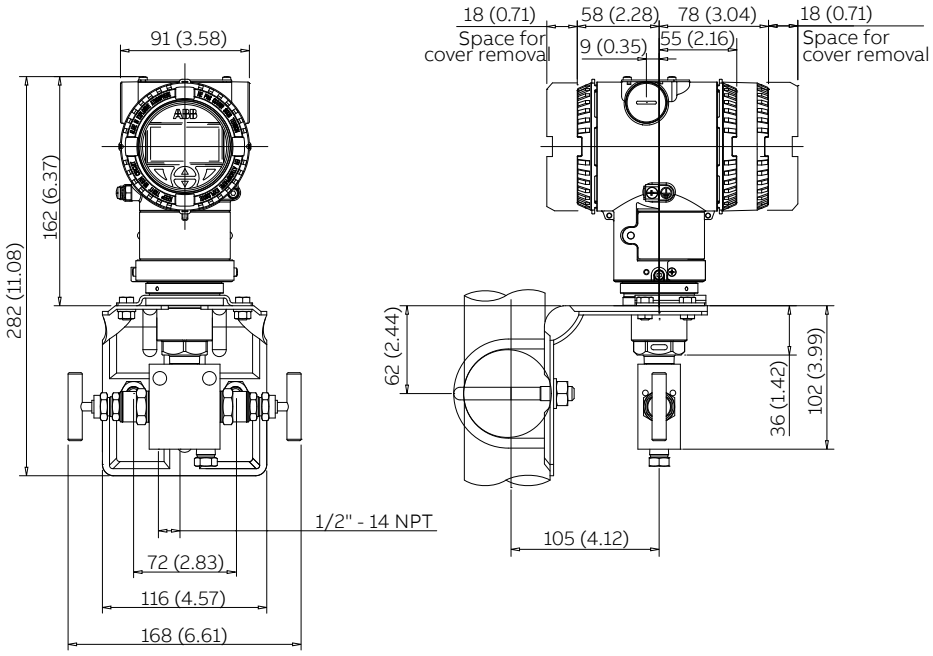

Pressure transmitter DP-Style (266PSH, 266VSH, 266RSx) on manifold bracket with M26.D.A.S.2.V.
(1/2 in. - 14 NPT female threaded inlet and flanged outlet according to IEC 61518/B)

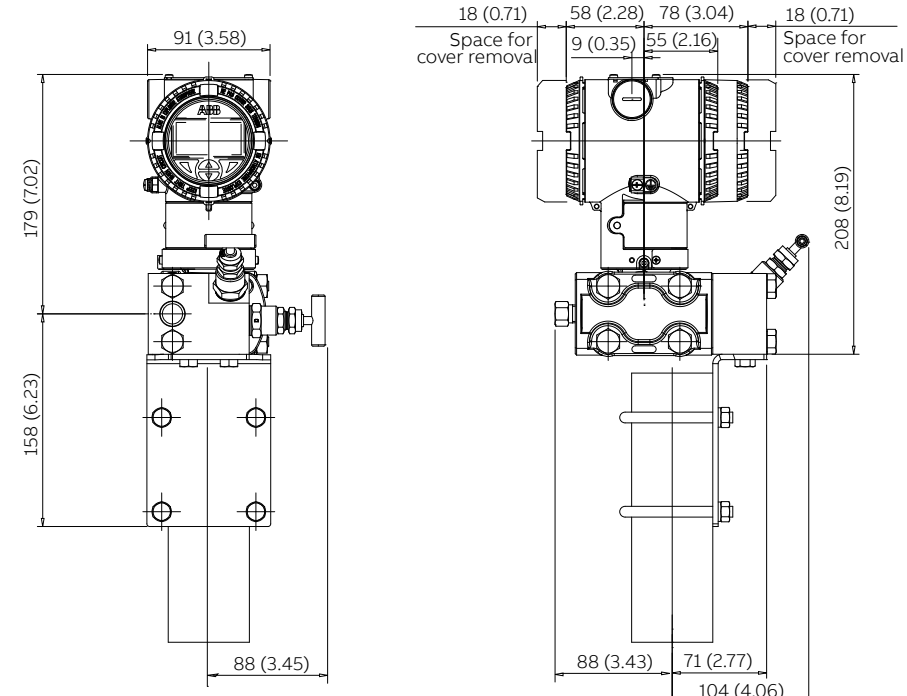

Pressure transmitter DP-Style (266PSH, 266VSH, 266RSx) with vertical flanges on manifold bracket with M26.D.A.V.2.V.
(1/2 in. - 14 NPT female threaded inlet and flanged outlet according to IEC 61518/B)

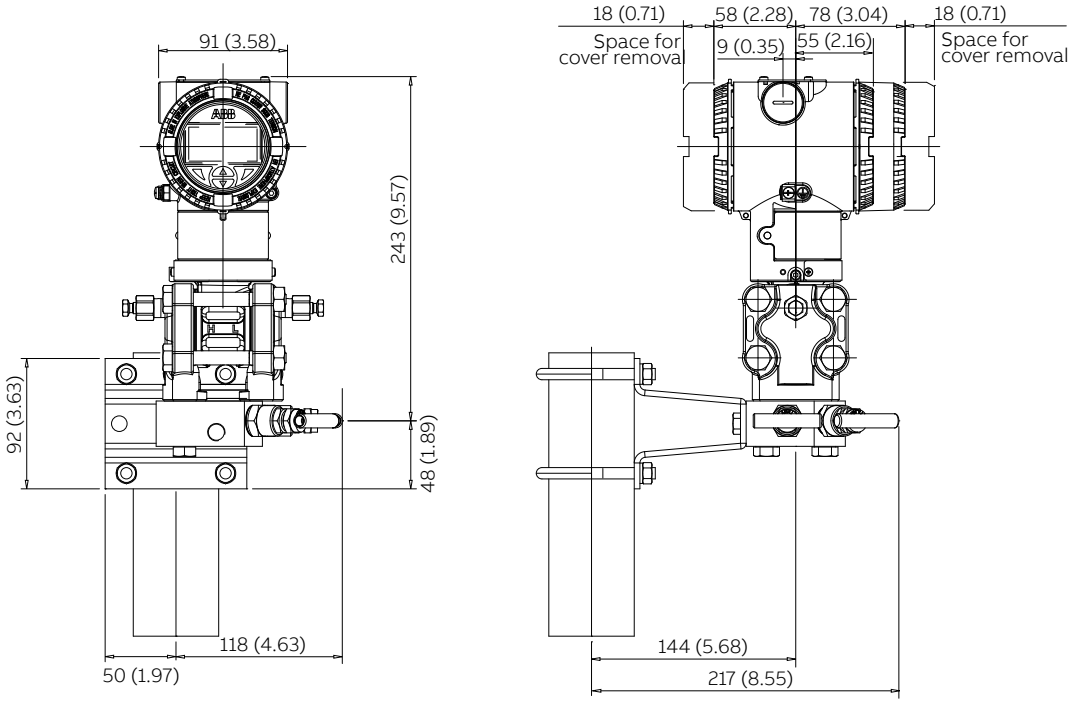

...Mounting dimensions

(not for construction unless certified) – dimensions in mm (inch)

Differential pressure transmitter (266DSH, 266MSH) on manifold bracket with M26.D.A.S.3.V.
(1/2 in. - 14 NPT female threaded inlet and flanged outlet according to IEC 61518/B)

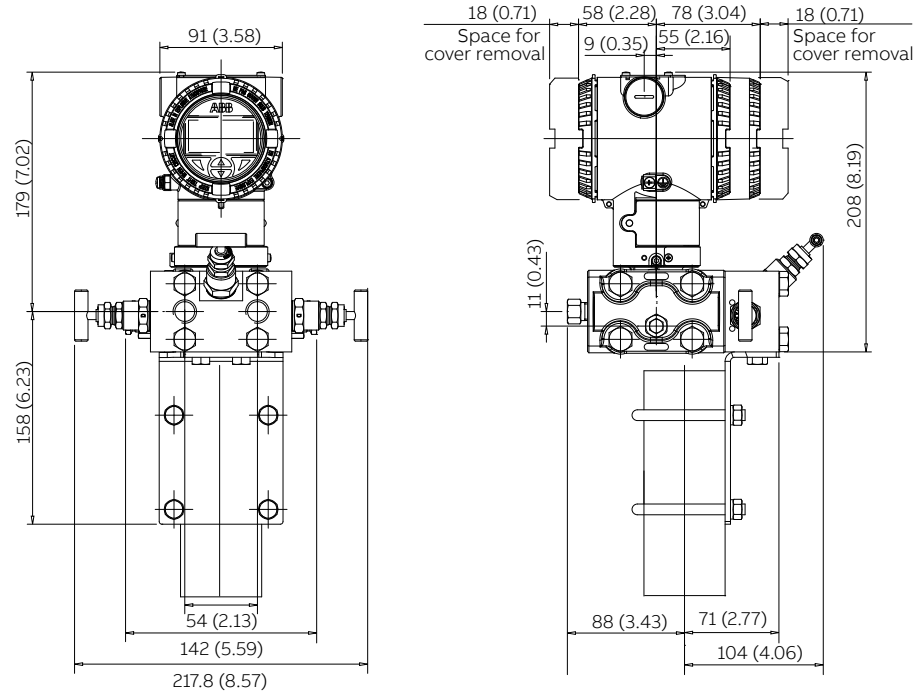

Differential pressure transmitter (266DSH, 266MSH) on manifold bracket with M26.D.A.V.3.V.
(1/2 in. - 14 NPT female threaded inlet and flanged outlet according to IEC 61518/B)

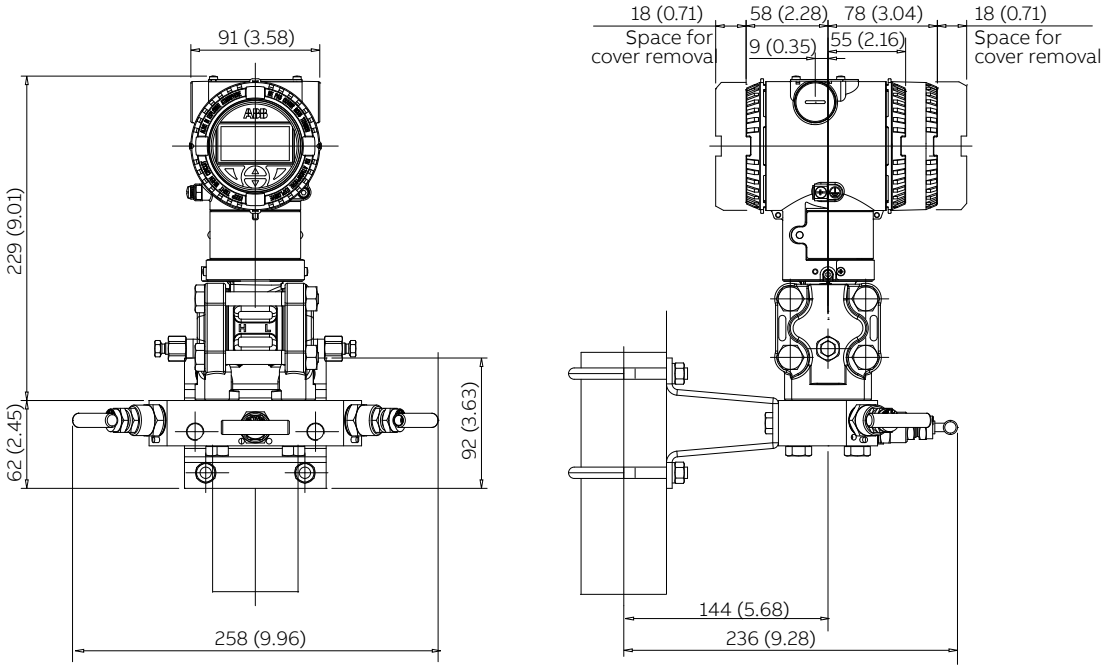

Differential pressure transmitter (266DSH, 266MSH) on manifold bracket with M26.D.A.S.5.V.
(1/2 in. - 14 NPT female threaded inlet and flanged outlet according to IEC 61518/B)

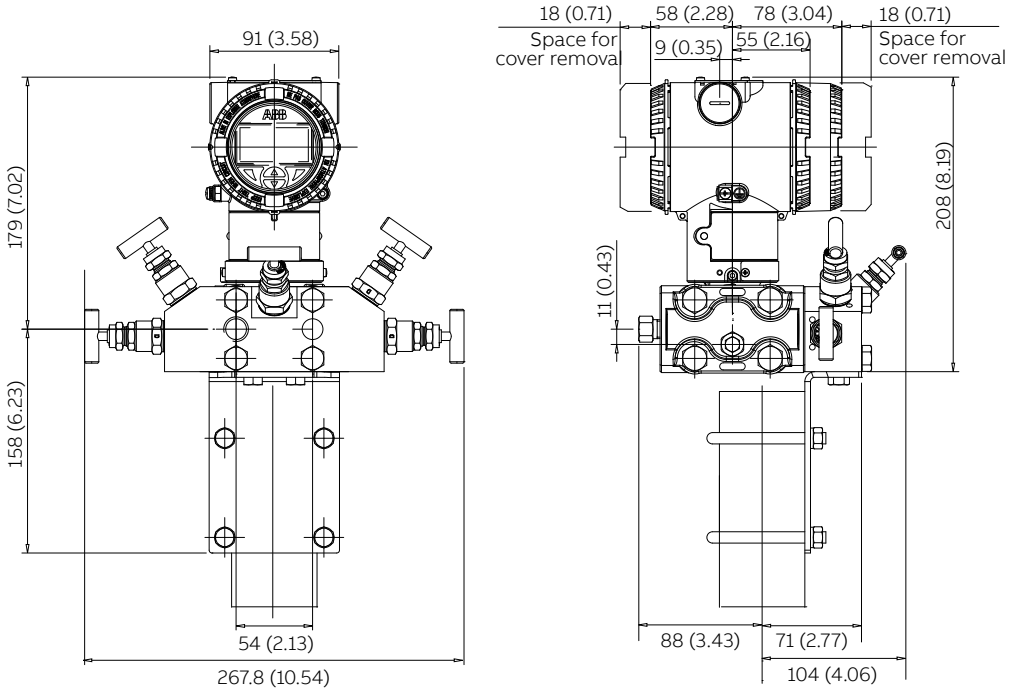

Differential pressure transmitter (266DSH, 266MSH) on manifold bracket with M26.D.A.V.5.V.
(1/2 in. - 14 NPT female threaded inlet and flanged outlet according to IEC 61518/B)

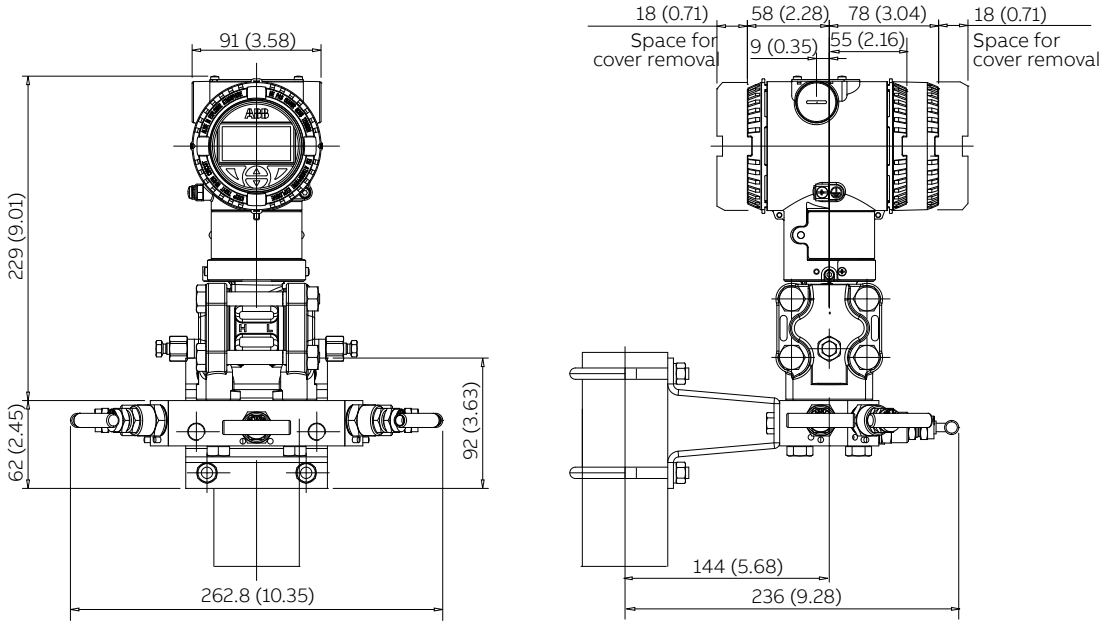

Ordering information

Main ordering information for model M26 manifold

Select one character or set of characters from each category and specify complete catalogue number.
Refer to additional ordering information and specify one or more codes for each transmitter if additional options are required.

Base model - 1st to 3rd characters **Manifold model for pressure transmitter**		**M 2 6**	**X**	**X**	**X**	**X**	**X**	**X**	**X**	**X**	**X**	**X**
Design - 4th character												
Manifold for DP Style transmitters			D									
Manifold for P Style transmitters			P									
Revision - 5th character												
Revision A				A								
Body configuration - 6th character												
Standard construction					S							
For vertical-flange transmitter	(Note: 1)				V							
Valves - 7th character												
Two-valve manifold						2						
Three-valve manifold	(Note: 1)					3						
Five-valve manifold	(Note: 1)					5						
Valve Type - 8th character												
Standard							V					
Material (wetted parts) - 9th character												
Stainless steel AISI 316L		NACE						S				
Hastelloy® C-276		NACE						H				
Monel 400								M				
Inconel 625								N				
Packing material - 10th character												
PTFE									P			
Graphoil									G			
Gasket material (wetted parts) - 11th character												
None	(Note: 2)									N		
PTFE	(Notes: 1, 5)									P		
Graphoil	(Notes: 1, 6)									G		
Manifold process connection (INLET)- 12th character												
Threaded 1/2 in. - 14 NPT-female											F	
Threaded 1/2 in. - 14 NPT-male	(Note: 2)										M	
Manifold transmitter connection (OUTLET)- 13th character												
Flanged outlet according to IEC61518/B	(Note: 1)											1
Threaded 1/2 in. - 14 NPT-female	(Note: 2)											F
Threaded 1/2 in. - 14 NPT-male	(Note: 2)											M

		M26 X X X X X X X X X X X X X X	X	X	X	X
Rating - 14th character						
413.7 bar (41.37 MPa, 6000 psi)	(Note: 1)		6			
690 bar (69 MPa, 10000 psi)	(Note: 2)		1			
Transmitter fixing bolts - 15th characters						
None	(Note: 2)			N		
Carbon Steel	(Note: 1)			C		
Stainless Steel NACE compliant (MWP=21 MPa, 210 bar, 3045 psi)	(Note: 1)			S		
Bracket kit - 16th character						
None					N	
Carbon Steel bracket kit for pipe mounting	(Notes: 1, 3)				C	
Stainless Steel bracket kit for pipe mounting	(Notes: 1, 4)				S	
Material traceability - 17th character						
Inspection certificate EN 10204–3.1 of process wetted parts						2

Note 1: Not available with design code P
Note 2: Not available with design code D
Note 3: Not available with bolts code S
Note 4: Not available with bolts code C
Note 5: Not available with packing material code G
Note 6: Not available with packing material code P

Standard delivery items (can be differently specified by ordering code)

- PTFE gaskets for transmitter connection (for flanged models)
- 1 or 2 Plugs 1/4“ NPT-M (according to the selected manifold model)
- Carbon Steel bolts
- Certificate of compliance with the order EN10204-2.1
- Inspection certificate EN 10204-3.1 of process wetted parts.

NACE CONFORMITY IS ACCORDING TO Recommendations PER MR0175 2003 / ISO 15156-3 FOR AISI 316L, HASTELLOY C-276, INCONEL 625 AND MONEL 400

3 and 5 valve M26 manifolds are in compliance with ASME B31.1 - Power Piping.

Trademarks
™ Hastelloy C-276 is a Cabot Corporation trademark
™ Monel is an International Nickel Co. trademark

Manifold made in Italy by SAMI Instruments Srl

ABB Ltd.
Measurement & Analytics
Howard Road St. Neots
Cambridgeshire PE19 8EU
UK
Tel: +44 (0)1480 475321
Fax: +44 (0)1480 217948

ABB S.p.A.
Measurement & Analytics
Via Luigi Vaccani 4
22016 Tremezzina Loc. Ossuccio (CO)
Italy
Tel: +39 0344 58111

ABB Inc.
Measurement & Analytics
125 E. County Line Road
Warminster PA 18974
USA
Tel: +1 215 674 6000
Fax: +1 215 674 7183

abb.com/measurement

We reserve the right to make technical changes or modify the contents of this document without prior notice. With regard to purchase orders, the agreed particulars shall prevail. ABB does not accept any responsibility whatsoever for potential errors or possible lack of information in this document.

We reserve all rights in this document and in the subject matter and illustrations contained therein. Any reproduction, disclosure to third parties or utilization of its contents – in whole or in parts – is forbidden without prior written consent of ABB.

© Copyright 2018 ABB
All rights reserved

3KXP7200007R1001

DS/M26-EN REV. H 11.2018