Quick Start Guide
00825-0100-2555, Rev. AD
October 2026

Rosemount™ 2555 Solids Level Switch

Capacitance Probe



Product documents can be located by selecting the search tool magnifier icon at the top of **www.emerson.com** and then select the "Serial Number" lookup button in the pop-up menu.

For Additional Product Information:

Please scan the QR code on this document for your local language safety messages.
Por favor, escanee el código QR de este documento para los mensajes de seguridad en su idioma local.
Bitte scannen Sie den QR-Code in diesem Dokument, um Sicherheitshinweise in Ihrer Landessprache zu erstellen.
Scannez le code QR figurant sur ce document pour consulter les messages de sécurité dans la langue locale.
Si prega di scansionare il codice QR su questo documento per i messaggi di sicurezza della propria lingua locale.
Escaneie o código QR neste documento para obter as mensagens de segurança no idioma local.
Пожалуйста, отсканируйте QR-код на этом документе, чтобы получить сообщения о безопасности на вашем языке.
이 문서의 QR 코드를 스캔하여 현지 언어 안전 메시지를 확인하십시오.
このドキュメントのQRコードをスキャンして、現地の言語の安全メッセージを確認してください
请扫描本文档上的二维码，获取您当地语言的安全信息。

ROSEMOUNT™

EMERSON™

1 Introduction

The level switch detects the presence and absence of a process media at its installation point, and reports it as a switched electrical output.

Note

Other language versions of this Quick Start Guide can be found at Emerson.com/Rosemount.

1.1 Before you begin

NOTICE

Read this manual before working with the product. For personal and system safety and for optimum product performance, ensure that you thoroughly understand the contents before installing, using, or maintaining this product.

1.2 Technical assistance

For technical assistance, contacts are listed below:

1.2.1 Customer Central

Technical support, quoting, and order-related questions.

- United States - 1-800-999-9307 (7:00 am to 7:00 pm CST)
- Asia Pacific - 65 777 8211

1.2.2 North American Response Center

Equipment service needs.

- 1-800-654-7768 (24 hours a day — includes Canada)

Outside of these areas, contact your local Emerson representative.

1.3 Safety messages

WARNING

Physical access

Unauthorized personnel may potentially cause significant damage to and/or misconfiguration of end users' equipment. This could be intentional or unintentional and needs to be protected against.

Physical security is an important part of any security program and fundamental in protecting your system. Restrict physical access by unauthorized personnel to protect end users' assets. This is true for all systems used within the facility.

WARNING

Failure to follow safe installation and servicing guidelines could result in death or serious injury.

Ensure the level switch is installed by qualified personnel and in accordance with applicable code of practice.

Use the level switch only as specified in this manual. Failure to do so may impair the protection provided by the level switch.

⚠ WARNING

Explosions could result in death or serious injury.

In explosion-proof/flameproof, increased-safety, and dust ignition-proof installations, do not remove the housing cover when power is applied to the level switch.

The housing cover must be fully engaged to meet flameproof/explosion-proof requirements.

⚠ WARNING

Electrical shock could cause death or serious injury.

Avoid contact with the leads and terminals. High voltage that may be present on leads can cause electrical shock.

Ensure the power to the level switch is off, and the lines to any other external power source are disconnected or not powered while wiring the level switch.

Ensure the wiring is suitable for the electrical current and the insulation is suitable for the voltage, temperature, and environment.

⚠ WARNING

Process leaks could result in death or serious injury.

Ensure the level switch is handled carefully. If the process seal is damaged, gas or dust might escape from the silo (or other vessel).

⚠ WARNING

Any substitution of non-recognized parts may jeopardize safety. Repair (e.g. substitution of components) may also jeopardize safety and is not allowed under any circumstances.

Unauthorized changes to the product are strictly prohibited as they may unintentionally and unpredictably alter performance and jeopardize safety. Unauthorized changes that interfere with the integrity of the welds or flanges, such as making additional perforations, compromise product integrity and safety. Equipment ratings and certifications are no longer valid on any products that have been damaged or modified without the prior written permission of Emerson. Any continued use of product that has been damaged or modified without the written authorization is at the customer's sole risk and expense.

⚠ CAUTION

Individuals who handle products exposed to a hazardous substance can avoid injury if they are informed of and understand the hazard.

If the product being returned was exposed to a hazardous substance as defined by Occupational Safety and Health Administration (OSHA), a copy of the required Safety Data Sheet (SDS) for each hazardous substance identified must be included with the returned level switch.

NOTICE

The products described in this document are NOT designed for nuclear-qualified applications. Using non-nuclear qualified products in applications that require nuclear-qualified hardware or products may cause inaccurate readings. For information on Rosemount nuclear-qualified products, contact your local Emerson Sales Representative.

1.4 Applications

A Rosemount™ 2555 Solids Level Switch is used for monitoring the level of bulk materials in all types of containers and silos.

The level switch can be used with all powdery and granulated bulk materials, slurry and liquids.

Four different housing options are available:

- Standard local
  - for installations in non-hazardous area (ordinary locations)
  - for dust-ignition proof installations in hazardous areas
- Type 'D' local
  - for flameproof/explosion-proof/dust-ignition proof installations in hazardous areas (classified locations)
- Type 'DE' local
  - as Type 'D' but with a terminal box (increased safety)
- Standard Remote
  - separated electronics connected to probe by a cable

Typical applications are:

- Building materials
  - Lime, extruded polystyrene foam (XPS), molding sand, etc.
- Food and beverage
  - Milk powder, flour, salt, etc.
- Plastics
  - Plastic granulates, etc.
- Timber
- Chemicals

The level switch has a threaded, flanged, or Tri Clamp process connection for mounting it onto a silo (or other vessel). You can mount it on a side wall of the silo, so that it is level with the filling limit to be monitored. Alternatively, if it has an extended length, mount it vertically on top of a silo to monitor the maximum filling limit.

The length of the capacitance probe can be up to 98.4 in. (2.5 m) with a rod extension tube or up to 787 in. (20 m) with an extension rope.

The use of a sliding sleeve is recommended so that the switching point can be changed easily during the live operation of the level switch.

Note

The Rosemount 2555 Product Data Sheet has all dimensional drawings.

Figure 1-1: Typical Installation Examples

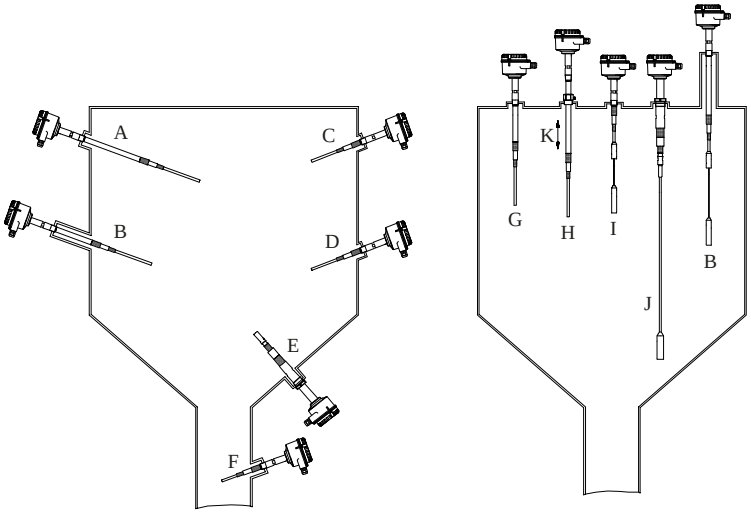

A. Inactive length to reach distance from silo wall
B. Inactive length due to long mounting nozzle
C. Short length (full-silo detection)
D. Short length (on-demand detection)
E. Short length (empty-silo detection)
F. Application in down pipe
G. Inactive length to bring active probe to required level
H. Inactive length and sliding sleeve for adjustable height
I. Rope version (full-silo detection)
J. Rope version (empty-silo detection)
K. Optional sliding sleeve

1.4.1 Active and inactive probe lengths

The active length is always inside the silo and generates an electrical field between the probe and the silo wall. With active shield technology, the RF measurements are unaffected by product build-up on the probe. The inactive length is used to extend the overall probe length.

Note

See the Rosemount 2555 Product Data Sheet for extended length options.

1.5 Measurement principles

The Rosemount 2555 uses the principle of measuring capacitance through RF (Radio Frequency) to detect the presence or absence of a solids medium and monitors the change in capacitance between the probe and the wall of the silo.

When the solids medium in the vessel (silo) falls away from the probe level, it causes a decrease in capacitance that is detected by the electronics and the output switches to indicate an 'uncovered' state.

When the solids medium in the vessel (silo) rises and covers the rod, it causes an increase of capacitance that is detected by the electronics and the output switches to indicate a 'covered' state.

The electrical output will vary depending on the electronics selected when the Rosemount 2555 was ordered.

2 Mechanical installation

2.1 Mounting considerations

Before mounting the level switch on a silo (or other vessel), review the safety and pre-mounting sections.

2.1.1 Safety

General safety

1. Installation of this equipment shall be carried out by suitably trained personnel, in accordance with the applicable code of practice.
2. If equipment is likely to come into contact with aggressive substances, it is the user's responsibility to take suitable precautions that prevent it from being adversely affected, thus ensuring the type of protection is not compromised.
    a. **Aggressive substances:** Acidic liquids or gases that may attack metals or solvents that may affect polymeric materials.
    b. **Suitable precautions:** Regular checks as part of routine inspections or establishing from a material's data sheet that it is resistant to specific chemicals.
3. It is the responsibility of the installer to:
    a. Take protective measures, such as fitting an angled shield (reverse V shape) to the silo or selecting an extension tube option, when there are high mechanical forces.
    b. Ensure that the process connection is tightened by the correct amount of torque and sealed to prevent process leaks.
4. Technical data
    a. The Rosemount 2555 Product Data Sheet has all the technical specifications. See Emerson.com/Rosemount for other language versions.

Hazardous area safety

The Rosemount 2555 Product Certifications document has safety instructions and control drawings for hazardous area installations. See Emerson.com/Rosemount for other language versions.

2.1.2 Hygienic applications

EHEDG approval data and compliance requirements are stated in the Rosemount 2555 Product Certifications document (see Emerson.com/Rosemount for other language versions).

2.1.3 Tightening threaded process connections

When tightening the threaded process connection of a Rosemount 2555:

- Use an open-ended wrench on the hexagonal boss of the level switch or the sliding sleeve.
- Never tighten by using the housing.
- Do not exceed the maximum torque of 80 Nm.

2.1.4 Sliding sleeve

Tighten both M8 screws with a torque of 20 Nm to establish a seal and maintain the process pressure.

2.1.5 Mechanical load

Rosemount 2555S, 2555M and 2555E

The load at points A and B (Figure 2-1) must not be exceeded. All ratings are for 104 °F (40 °C).

Figure 2-1: Maximum Mechanical Loads

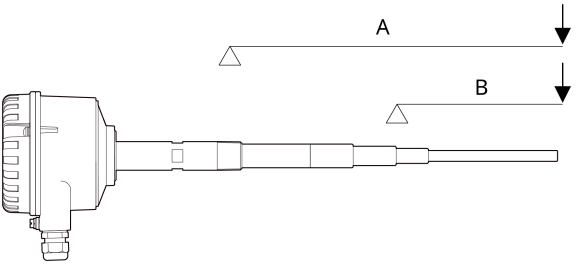

Table 2-1: Rod Version: Maximum Mechanical Loads

Model	A	B
Rosemount 2555S	125 Nm	20 Nm
Rosemount 2555M	525 Nm	90 Nm
Rosemount 2555E	525 Nm	20 Nm

Rosemount 2555R, 2555P, and 2555V

Table 2-2: Rope Version: Maximum Mechanical Loads

Model	Tensile load
Rosemount 2555R	4 kN
Rosemount 2555P	40 kN
Rosemount 2555V	10 kN

2.1.6 Orientation of cable glands

When the level switch is mounted horizontally, ensure the cable glands are pointed downwards to avoid water getting inside the housing. Unused conduit entries must be completely sealed with a suitably rated stopping (blanking) plug.

2.1.7 Future maintenance

It is advisable to grease the screws of the housing cover (lid) when a corrosive atmosphere is present. This will help prevent difficulties when the cover needs to be removed during future maintenance tasks.

2.1.8 Minimum distances

Figure 2-2 shows the minimum distances required between installed level switches, the walls of a silo, and a protective shield. The installation of a protective angled shield above the level switch is recommended depending on the type of bulk solids.

Figure 2-2: Minimum Distances

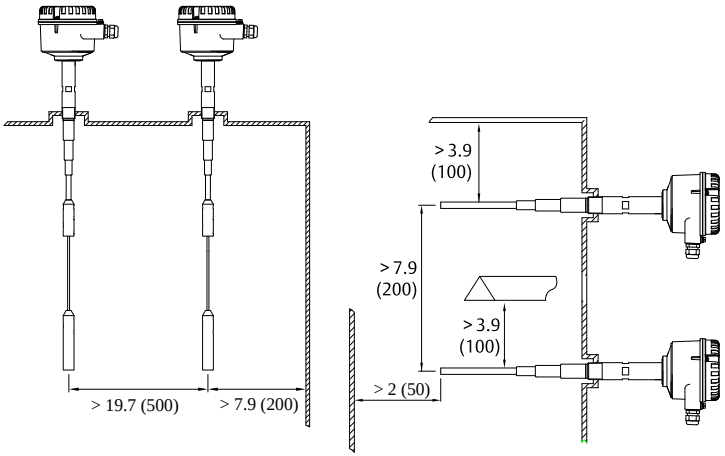

Note

Avoid installing the level switch directly under the flow of solids material (filling point).

2.2 Mounting the level switch

Figure 2-3 and Figure 2-4 show how the Rosemount 2555 should be mounted.

Figure 2-3: Correct and Incorrect Mounting (Rod Version)

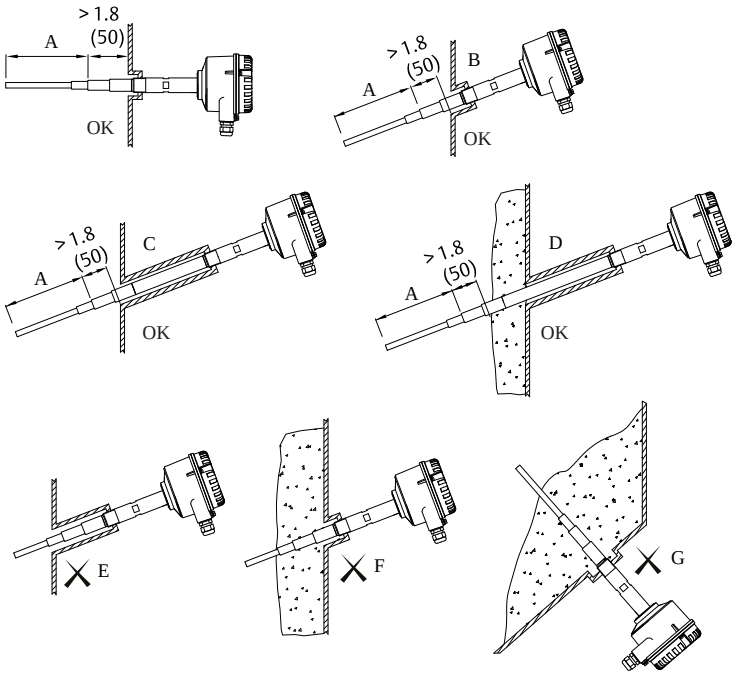

A. Active probe
B. Mounting the level switch at an angle helps solids material to fall away and prevent build-up
C. Correct installation: The inactive length is correctly used with a long socket
D. Correct installation: The inactive length is correctly used even though there is a build-up of solids material
E. Incorrect installation: The active probe is inside the socket
F. Incorrect installation: The active probe is covered by a build-up of material and is not detecting the true level
G. Incorrect installation: The active probe is located where solids material would remain, even in an empty silo

Figure 2-4: Correct and Incorrect Mounting (Rope Version)

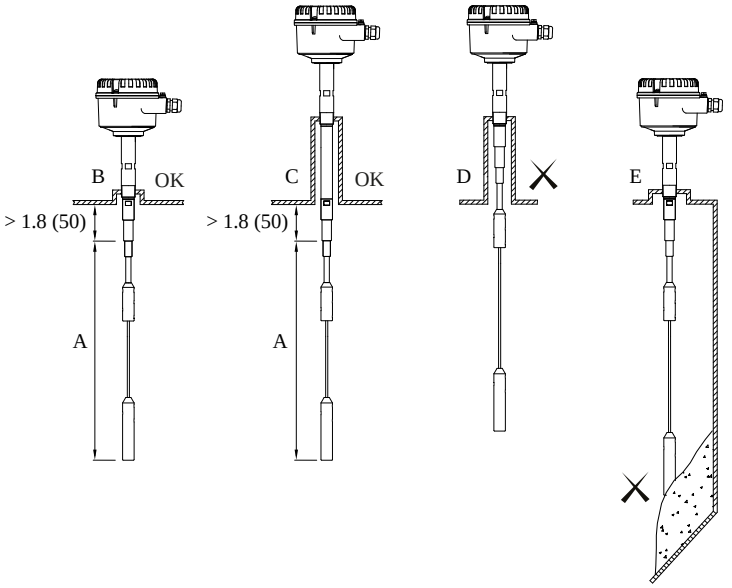

A. Active probe
B. Correct installation: The socket height is short
C. Correct installation: The inactive length is correctly used within a long socket
D. Incorrect installation: The active probe is inside the socket
E. Incorrect installation: The active probe is covered by a build-up of material and may not be detecting the true level

3 Electrical installation

3.1 Wiring considerations

Note

See the Rosemount 2555 Product Data Sheet for the full electrical specifications.

3.1.1 Handling

In cases of improper handling or handling malpractice, the electrical safety of the device cannot be guaranteed.

3.1.2 Grounding (earthing)

Before any electrical installation, connect the internal or external Potential Earth (PE) terminal to a grounding point at the installation site if the Rosemount 2555 is mounted to a non-metal silo or other storage vessel.

Note

See Wiring the level switch for the location of the PE terminals.

3.1.3 Installation regulations

Local regulations or VDE 0100 (Regulations of German Electrotechnical Engineers) must be observed.

When using 24 V supply voltage, an approved power supply with reinforced insulation to mains is required.

3.1.4 Fuse

Use a fuse as stated in the connection diagrams.

For details, see Wiring the level switch.

3.1.5 Residual Current Circuit Breaker (RCCB) protection

In case of a defect, the distribution voltage must automatically be cut-off by an RCCB protection switch to protect against indirect contact with dangerous voltages.

3.1.6 Power supply

Power supply switch

A voltage disconnection switch must be provided near the device.

Supply voltage

Compare the supply voltage applied with the specifications given on the electronic module and nameplate before switching on the device.

3.1.7 Wiring

Field wiring cables

The diameter has to match the clamping range of the used cable gland.

The cross-section has to match the clamping range of the connection terminals and the maximum current must be considered.

All field wiring must have insulation suitable for at least 250 Vac.

The temperature rating must be at least 194 °F (90 °C).

Use a shielded cable when there are electrical interferences present that are higher than stated in the EMC standards. Otherwise, an unshielded instrumentation cable can be used.

Guiding the cables in the terminal box

The field wiring cables must be cut to a length to be able to properly fit them into the terminal box.

Connection terminals

When preparing cable wires for connection to terminals in a standard or type 'D' housing, the wire insulation must be stripped to show no more than 0.31 in. (8 mm) of the copper strands. For Type 'DE' housings, remove insulation of no more than 0.35 in. (9 mm). Always check that the power supply is disconnected or switched-off to avoid coming into contact with dangerous live parts.

3.1.8 Cable glands

The screwed cable gland and stopping plug must have the following specifications:

- Ingress protection IP67
- Temperature range from -40 °C to +80 °C
- Hazardous area certification (depending on where the unit is installed)
- Pull relief

Ensure the screwed cable gland safely seals the cable and is tight enough to prevent water ingress. Unused conduit or cable entries must be sealed with a stopping (blanking) plug.
A strain relief must be provided for the field wiring cables when the device is installed with the factory-provided cable glands.

Cable glands and conduit system for ATEX or IECEx

The installation must comply with the regulations of the country where the level switch is installed.

Unused entries have to be closed with suitably rated stopping (blanking) plugs.

Where available, the factory-provided parts must be used.

The diameter of the field wiring cable must match the clamping range of the cable clamp.

If factory-provided parts are not used, the following must be ensured:

- The parts must have an approval adequate to the approval of the level sensor (certificate and type of protection).
- The approved temperature range must be between the minimum ambient temperature of the level sensor and the maximum ambient temperature of the level sensor increased by 10 K.
- The parts must be mounted according to the instructions of the manufacturer.

3.1.9 Conduit system

When a threaded conduit system is used instead of a cable gland, the regulations of the country must be observed. The conduit must have a ½-in. NPT tapered thread to match a NPT threaded conduit entry of the level switch and comply with ANSI B 1.20.1. Unused conduit entries must be closed tightly with a metal stopping (blanking) plug.

Conduit system for FM

The regulations of the country must be observed. The flameproof seals and stopping (blanking) plugs must have an adequate type approval and a temperature range of at least -40 to 176 °F (–40 to +80 °C). In addition, they must be suitable for the conditions and correctly installed. Where available, the original provided parts of the manufacturer must be used.

Installation with a conduit system in a hazardous area

In a conduit system, single electric conductors are installed in a certified pipe system. This pipe system must also have a flameproof or explosion-proof construction.

For ATEX and IECEx approvals, both enclosure of the level switch and pipe system need to be isolated from each other by using a certified flameproof or explosion-proof seal. The seal must be installed directly in, or at, the conduit entries of the level switch. Unused conduit entries must be sealed using suitably certified blanking elements (stopping plugs).

For FM approval, both enclosure of the level switch and pipe system need to be isolated from each other by using a certified flameproof seal. The seal must be installed within 18 inches of the enclosure wall. Unused conduit entries must be sealed using suitably certified blanking elements (stopping plugs).

3.1.10 Remote housing

The remote cable must be installed separately from the power supply lines to avoid immunity interferences The minimum bending radius of 2 in. (50 mm) must be observed.

3.1.11 Relay and transistor protection

Provide protection for relay contacts and output transistors to protect the device against inductive load surges.

3.1.12 Static charging

The Rosemount 2555 must be grounded to avoid a static electrical build-up. This is particularly important for applications with pneumatic conveying and non-metallic containers.

3.1.13 Opening the lid

Before opening the lid, ensure no dust deposits, no airborne dusts, and no hazardous atmosphere are present.

Do not remove the lid (cover) in hazardous areas while circuits are alive.

Figure 3-1: Connections Overview for Standard Housing

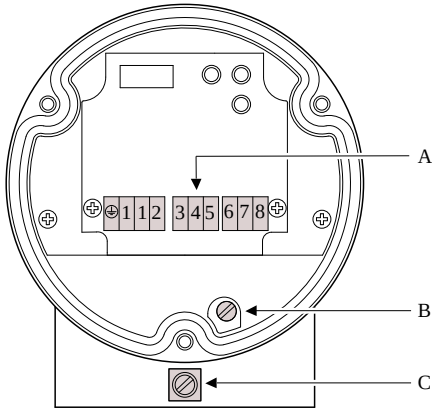

A. Connection terminals
B. Internal Protective Earth (PE) terminal
C. External Protective Earth (PE) terminal

Figure 3-2: Connections Overview for Type 'D' Housing

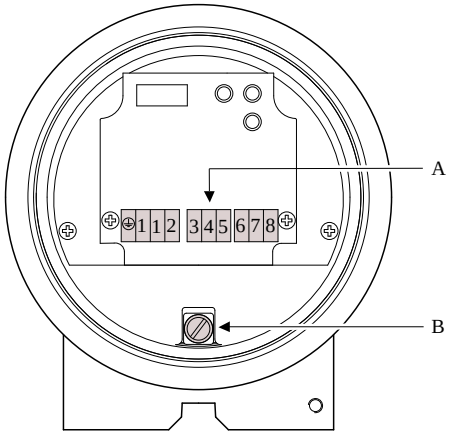

A. Connection terminals
B. Internal Protective Earth (PE) terminal

Figure 3-3: Connections Overview for Type 'DE' Housing

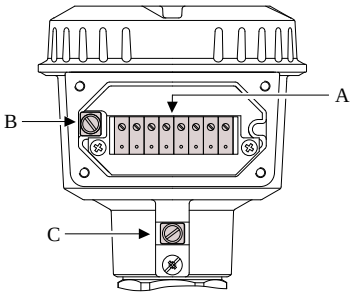

A. Connection terminals (in a terminal box for increased safety).
The fixing torque is 0.5 to 0.6 Nm
B. Internal Protective Earth (PE) terminal
C. External Protective Earth (PE) terminal

3.2.1 Wiring the power supply and the DPDT relay

Power supply

- 21 to 230 Vac (50/60 Hz) ±10%, 1.5 VA
- 21 to 230 Vdc ±10%, 1.5 W
- Fuse on power supply: maximum 10 A, 250 V, HBC, fast or slow

Signal output (floating relay DPDT)

- Maximum 250 Vac, 8 A (non-inductive)
- Maximum 30 Vdc, 5 A (non-inductive)
- Fuse on signal output: maximum 10 A, 250 V, HBC, fast or slow

Figure 3-4: Power Supply and Signal Output

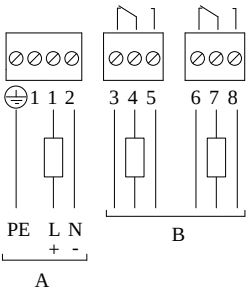

A. Power supply
B. Signal output

4 Configuration

4.1 User interface

Figure 4-1: Features of the User Interface

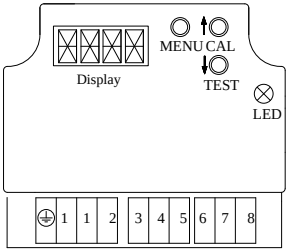

Table 4-1: LEDs

Green	Relay is energized
Yellow	Relay is de-energized
Red	Maintenance (flashing) or error (not flashing)

4.2 Powering up the first time (calibration)

Calibration automatically starts when the Rosemount 2555 is powered up for the first time. If the level switch is powered off and then on again, this calibration procedure is not repeated when starting up.

Prerequisites

- The level switch must be correctly mounted and wired.
- The level of the solids material must be below the probe.

Procedure

1. ⚠ Ensure the level of the solids material is not covering the probe.

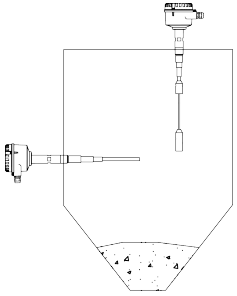

2. Power up the level switch.
   a. The calibration is in progress when the displays indicate **CAL** and the LED is red and flashing.
   b. After approximately 45 seconds, the calibration completes and indicates the actual measured capacitance and the letter **u** is indicated for the uncovered probe status.
3. Check the quick-start settings.

a. Use the quick-start menu (see Quick-start menus) to review and change the factory settings for Fail Safe High and Low, signal output delay, and sensitivity.

After completing the task:

The Rosemount 2555 is now calibrated and ready to be configured.

4.3 Measurement mode

The level switch indicates the actual measured capacitance and the status of the signal output.

Display[1]	LED	Description
*** u *** c	Green or yellow[2]	Actual measured capacitance in pF [3]. Actual signal output: states uncovered probe `u` or covered probe `c`.

(1) If unexpected messages are displayed, see Maintenance and error messages.

(2) Green or yellow depending on setting of FSH and FSL.

(3) Resolution is 0.1 pF (< 100 pF) or 0.5 pF (> 100 pF). If values are > 100 pF, a dot behind the number means 0.5 pF (e.g. 100. means 100.5 pF)

Note

If the actual measured capacitance is higher than electronics can measure (i.e. > 400 pF with sensitivity setting >= 2 pF or > 100 pF with sensitivity setting <= 1 pF), the level switch will state `400c` or `100c`. The measurement is valid, since the actual capacitance is well above the calibrated switch point. Also, the output signal indicates the probe is covered by showing `c`.

4.4 Quick-start menus

Note

The LED is flashing red while the quick-start menu is displayed. If no button is pressed within 5 minutes, the unit automatically returns to the measurement mode. All changed menu settings are saved.

Table 4-2: In Measurement Mode

MENU	When the level switch is in Measurement mode, press and hold the **MENU** button for 3 seconds to enter the quick-start menu. If `Code` is displayed, a Lock Code is required. Set the code number with the arrow buttons and confirm with the **Menu** button. Then press and hold the **Menu** button again for 3 seconds to enter the quick-start menu. While in the quick-start menu, press and hold the **Menu** button for 3 seconds to return to Measurement mode. Press the **Menu** button for less than 1 second to store a new setting and proceed to the next menu item.
CAL TEST	Use the arrowed buttons, **CAL** and **TEST**, to increase and decrease the value of a setting.

Table 4-3: Quick-start Menus

Display		Description	Menu item
A.	FSH[1] FSL	Fail Safe High Fail Safe Low	Signal output, Fail safe setting

Display		Description	Menu item
B.	ALL(1) C-U U-C	Covered-to-uncovered-to- covered probe Covered-to-uncovered probe Uncovered-to-covered probe	Signal output, Delay direction
C.	0.5(1) 2 5 to 60	Seconds	Signal output, Delay time Adjustable in steps (increment in 5 seconds).
D.	0.5 1 2(2) 4 10 15 25 35	pF	Sensitivity Required capacitance increase between uncovered probe (after calibration) and switch to output `covered probe`. Change the preset value only if required by the application. See Guide to push-button calibration. The D menu item is not valid, and is not shown if Manual calibration (menu item G) is set to ON.

(1) Factory default setting.

(2) Standard factory setting is 2 pF. Optional standard settings if ordered.

4.4.1 FSH and FSL settings

- FSH:
  - Use the FSH setting for full-silo detection applications.
  - Power failure or line break is considered by the electronics to be as full signal (as protection against overfilling).
- FSL:

- Use the FSL setting for empty-silo detection applications.
- Power failure or line break is considered by the electronics to be as empty signal (as protection against running dry).

Figure 4-2: FSH and FSL settings

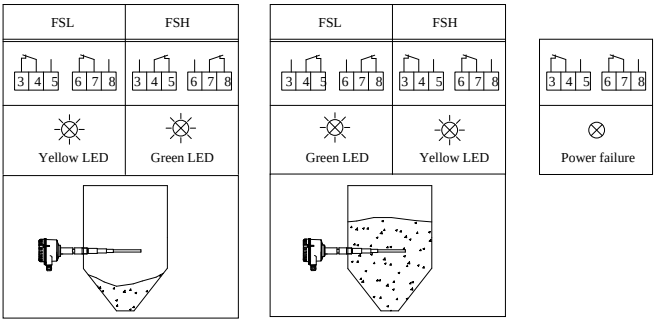

4.5 Guide to push-button calibration

Push-button calibration needs to be done if **Power up calibration at first time operation** was not successful or the unit was changed to another location or a significant change of DK was present after changing the material.

Calibration with uncovered probe only	This is the simplest method and, therefore, is recommended. If a too small change of capacitance between uncovered and covered probe is present, a higher sensitivity can be selected (1 pF or 0.5 pf). For a higher change of capacitance and excessive build-up, the sensitivity can be reduced (4 pF or more). For the calibration procedure, see Powering up the first time (calibration).
Calibration with uncovered and covered probe	Sets the switching-point in the middle between uncovered and covered probe capacitances. It ensures the maximum switching distance to both uncovered and covered probe capacitance, and helps to prevent material build-up. For materials with low DK values and therefore smaller capacitance differences for covered and uncovered states, this method is recommended. The DK values are not required to be known. For the calibration procedure, see Powering up the first time (calibration).

4.5.1 Push-button calibration for an uncovered probe only

Prerequisites

- The level switch must be correctly mounted and wired.
- The level of the solids material must be below the probe.

Procedure

1. Review the stages in the calibration procedure.

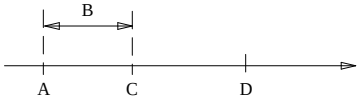

A. Capacitance of uncovered probe
B. Sensitivity
C. Switching-point
D. Capacitance of covered probe

---

2. ⚠ Ensure the solids material is not covering the probe.

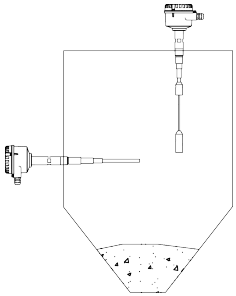

3. Set the sensitivity.
This is only required in certain circumstances. See Guide to push-button calibration.

   Use the quick-start menu item **D** to set the sensitivity. See Quick-start menus.

4. Press and hold the **CAL** button for three seconds. 

The LED is red and flashing when the calibration is started.
   a. Wait approximately 10 seconds until the calibration is completed.
   b. The display then indicates the actual measured capacitance and a **u** for the uncovered probe state.

Need help?

If **Code** is displayed:

1. Enter the code using the arrow buttons and confirm it with the **Menu** button.
2. Press and hold the **CAL** button again for three seconds to restart the calibration.

If any other messages are displayed, see Maintenance and error messages.

After completing the task:

The Rosemount 2555 is now calibrated and ready to be configured.

4.5.2 Push-button calibration for uncovered and covered probes

Prerequisites

- The level switch must be correctly mounted and wired.
- The level of the solids material must be below the probe.

Procedure

1. Review the stages in the calibration procedure.

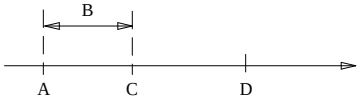

A. Capacitance of uncovered probe
B. Sensitivity
C. Switching-point
D. Capacitance of covered probe

---

2. ⚠ Ensure the solids material is not covering the probe.

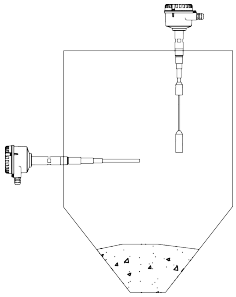

3. Press and hold the **CAL** button for three seconds. 

The LED is red and flashing when the calibration is started.

   a. Wait approximately 10 seconds until the calibration is completed.

   b. The display then indicates the actual measured capacitance and a **u** for the uncovered probe state.

4. Make a note of the actual measured capacitance displayed when the probe is uncovered.

5. Make a note of the actual measured capacitance displayed when the probe is covered.
For vertical mounting (rope version), the solids material must cover the probe by 4 - 8 in. (10 - 20 cm).

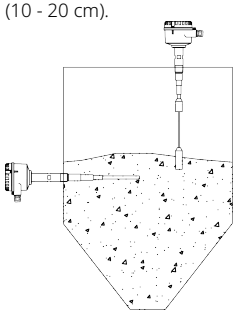

6. Set the sensitivity.
Calculate the capacitance difference between the uncovered and covered probe.

   Set the sensitivity as follows (quick-start menu item **D**):

Horizontal mounting		Vertical mounting (rope version)	
Capacitance[1]	Sensitivity[2]	Capacitance[1]	Sensitivity[3]
0.8 to 1.5 pF	0.5 pF	0.5 to 1.0 pF	0.5 pF
1.5 to 3 pF	1 pF	1.0 to 2 pF	1 pF
3 to 6 pF	2 pF	2 to 4 pF	2 pF
6 to 15 pF	4 pF	4 to 10 pF	4 pF
15 to 23 pF	10 pF	10 to 15 pF	10 pF
23 to 38 pF	15 pF	15 to 25 pF	15 pF
38 to 53 pF	25 pF	25 to 35 pF	25 pF
> 53 pF	35 pF	> 35 pF	35 pF

(1) Capacitance difference between uncovered and covered probe.

(2) The difference between uncovered and covered should be well above the sensitivity setting, i.e. approximately > 50 percent.

(3) The difference between uncovered and covered does not need to be above the sensitivity setting, since with the capacitance will increase with rising solids material.

If different materials need to be measured in the same bin without recalibration, the sensitivity must be set for the material with the lowest DK.

Need help?

If `Code` is displayed:

1. Enter the code using the arrow buttons and confirm it with the **Menu** button.
2. Press and hold the **CAL** button again for three seconds to restart the calibration.

If any other messages are displayed, see Maintenance and error messages.

After completing the task:

The Rosemount 2555 is now calibrated and ready to be configured.

4.6 Resetting the first power-up calibration

An already calibrated level switch can be reset to perform a new power-up calibration. This may be needed if installing it in a different silo or if it has to be pre-configured before being shipped.

To do a reset:

1. Press and hold the **CAL** button for three seconds.
2. Switch off the voltage supply when `CAL` appears on the display.

Since the calibration was started, but not successfully finished, it automatically starts again when the level switch is powered-up.

Note

Only the calibration is affected. The settings in the menus are not changed.

4.7 Data storage of the last valid calibration values

If the power supply is switched off, the last valid calibration values are stored, and are still valid, when power is switched on again.

4.8 Manual function test (proof test)

The Rosemount 2555 can self-test the internal electronics and external connected signal evaluation.

Prerequisites

The proof-test must be operated in Measurement mode.

Procedure

1. Press and hold the **TEST** button for three seconds. 

The display shows `TEST` when the testing is started.
2. Wait approximately 20 seconds until the test is completed.
During the test, the LED turns yellow and the signal output relay changes state for approximately 10 seconds before returning to normal operation.

Need help?

If `Code` is displayed:

1. Enter the code using the arrow buttons and confirm it with the **Menu** button.
2. Press and hold the **CAL** button again for three seconds to restart the calibration.

If `ERR` is displayed, see Maintenance and error messages.

After completing the task:

The Rosemount 2555 is now calibrated and ready to be configured.

4.9 Advanced menu

Note

The LED will be red and flashing while the menu is displayed. If no button is pressed within 5 minutes, the unit automatically returns to the measurement mode. All changed menu settings are saved.

Table 4-4: In Measurement Mode

	When the level switch is in Measurement mode, press and hold the **MENU** button for 10 seconds to enter the **Advanced** menu. Keep holding the **MENU** button even when the **Quick-start** menu (item: A.FSx) appears after 3 seconds. If `Code` is displayed, a Lock Code is required. Set the code number with the arrow buttons, **CAL** and **TEST**, and confirm with the **MENU** button. Then, press and hold the **MENU** button again for 10 seconds to enter the **Advanced** menu. While in the **Advanced** menu, press and hold the menu button for 3 seconds to return to Measurement mode. Press the **MENU** button for less than 1 second to store a new setting and proceed to the next menu item.
	Use the arrowed buttons, **CAL** and **TEST**, to increase and decrease the value of a setting.

4.9.1 Auto recalibration

Note

The LED is red and flashing while the menu is displayed.

Table 4-5: Auto Recalibration Menu (Advanced Menu)

Display		Description	Menu item
F.[1]	OFF[2] ON		*Auto recalibration to uncovered probe*. It is possible to commission an already filled silo (covered probe). A proper calibration is not possible with covered probe. A solution is to do an auto calibration as soon as the silo becomes empty (uncovered probe). To do this, set Auto recalibration to **ON** and do a push-button calibration with a covered probe (press and hold the **CAL** button for 3 seconds). The level switch will recalibrate (as an uncovered probe) when the measured capacitance is 50% of the sensitivity setting (menu item **D**) for more than two minutes. Do not set to **ON** if excessive solids material build-up is present, since this build-up may decrease the measured capacitance and cause an incorrect calibration.

(1) Menu item "F" is not valid, and will not appear on the display, if manual calibration (Menu item "G") is set to "ON".

(2) Factory default setting.

4.9.2 Manual calibration

Note

The LED will be red and flashing while the menu is displayed.

Table 4-6: Manual calibration menu (Advanced menu)

Display		Description	Menu item
G.	**OFF**[1] **ON**		*Manual calibration ON/OFF*. If set to **ON**: • Menu items **H**,**K** and **L** appear. • Menu items **D** (Quick-start menu) and **F** (Auto re-calibration) are no longer valid and are hidden. • Push-button calibration is not possible (if **CAL** button is pressed, the display shows `G.ON`).
H.	**LO**[1] **HI**	Low High	*Sensitivity* range. Low sensitivity range allows to detect a capacitance change of ≥ 2 pF. High sensitivity range allows to detect a capacitance change of ≥ 0.5 pF. See also Guide to manual calibration

Display		Description	Menu item
K.	***	pF	*Switching-point covered-to-uncovered* 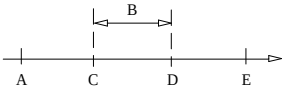 A. Capacitance of uncovered probe B. Hysteresis (Menu item **L**) C. Covered-to-uncovered switching-point (Menu item "K") D. Uncovered-to-covered switching-point E. Capacitance of covered probe --- Factory setting for the lowest pF value is 3 pF. Resolution is 0.1 pF (< 100 pF) or 0.5 pF (> 100 pF). If values are > 100 pF, a dot behind the number means 0.5 pF (e.g. 100. means 100.5 pF).
L.	***	pF	*Hysteresis* Hysteresis can be adjusted to minimize constant switching of the signal output. This can happen when there are unstable capacitance measurements due to movement of solids materials. The lowest value (factory setting) is 0.5/0.2 pF (for Low/ High sensitivity). The maximum value is limited by the maximum measurable capacitance. For resolution, see menu item **K**.

(1) Factory default setting.

4.9.3 Diagnostics

Note

The LED is red and flashing while the menu is displayed.

Table 4-7: Diagnostics Menu (Advanced Menu)

Display		Description	Menu item
M.	ON[(1)] OFF		Auto Function Test. This function automatically tests the internal electronics. Testing runs in the background and does not affect the normal measurement functions. If a failure is detected: • The display shows **ERR**. See Table 5-1. • The LED turns red and starts flashing. • The status output relay is de-energized.
N.	***	pF	Auto calibrated switch-point (covered-to-uncovered). If **OR** or **UR** is displayed, there is no valid calibration.

Display		Description	Menu item
			See Troubleshooting.
P.	***	pF	Auto calibrated switching-point(uncovered-to-covered). If OR or UR is displayed, there is no valid calibration. See Troubleshooting.
Q.	***	°C	Minimum Stored Electronics Temperature
R.	***	°C	Maximum Stored Electronics Temperature
S.	***		Software version
T.	***		Service data This manufacturer data is for the use of Emerson and not covered in this manual.

(1) Factory default setting.

4.9.4 Security and factory reset

Note

The LED is red and flashing while the menu is displayed.

Table 4-8: Security and Factory Reset Menu (Advanced Menu)

Display		Description	Menu item
V.	***		Lock code. The locking code (password) can be set to prevent unauthorized persons from accessing the menu system, starting a push-button calibration, or a manual function test (proof test). The locking code can be any number from 1 to 9999. A locking code of 000 disables the password protection. Contact Emerson if a locking code was set but has been forgotten.
W.	NO(1) YES		Factory reset. This resets all user-entered data to the factory defaults. The level switch automatically starts a calibration.

(1) Factory default setting.

4.10 Guide to manual calibration

Manual calibration is recommended for special purposes.

4.10.1 Calibration with uncovered probe only

This is the simplest method and, therefore, is recommended. It is applicable for higher DK values, which give a higher change of capacitance between an uncovered and covered probe. The DK value of the solids material is required to be known, to set the sensitivity range and an increase to the switching-point.

For the calibration procedure, see Powering up the first time (calibration).

4.10.2 Calibration with uncovered and covered probe

This method is the safest, since it sets the switching-point in the middle between uncovered and covered probe capacitances. It ensures the maximum switching distance to both uncovered and covered probe capacitance, and helps prevent material build-up.

For materials with low DK values, and therefore smaller capacitance differences for covered and uncovered states, this method is recommended. The DK values are required only to be roughly known, so as to set the sensitivity range.

For the calibration procedure, see Powering up the first time (calibration).

Table 4-9: Manual Calibration Guide

DK	Sensitivity range	Calibration: Uncovered probe only	Increase to switching-point	Calibration: Uncovered and covered probe
< 1.5	-	-	-	-
1.5 to 1.6	High	-	-	Required
1.7 to 1.9	High	Recommended	+1 pF	Possible
2.0 to 2.9	Low	Recommended	+2 pF	Possible
3.0 to 4.9	Low	Recommended	+4 pF	Possible
5.0 to 10	Low	Recommended	+10 pF	Possible
> 10	Low	Recommended	+15 pF	Possible

4.10.3 Manual calibration for an uncovered probe

Prerequisites

- The level switch must be correctly mounted and wired.
- The level of the solids material must be below the probe.
- The signal output delay should be set to 0.5 seconds.

Procedure

1. Review the stages in the calibration procedure.

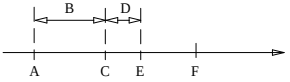

A. Capacitance of uncovered probe
B. Increase to switch-point
C. Switching-point for covered-to-uncovered probe
D. Hysteresis
E. Switching-point for uncovered-to-covered probe
F. Capacitance of covered probe

---

2. ⚠ Ensure the level of the solids material is well below the probe.

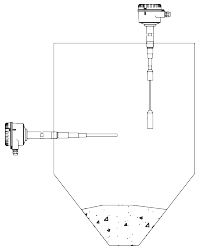

3. Set the sensitivity.
   Check for the required sensitivity range (low or high) depending on the material to be measured. Use the calibration guide. See Guide to manual calibration.
   Use the **Advanced** menu item **H** to set the sensitivity. See Advanced menu.

4. Establish the capacitance of the uncovered probe.
   a. Navigate to the menu item **K** in the **Advanced** menu.
   b. Starting with the lowest capacitance (factory setting is 3 pF), increase the displayed capacitance until the output just changes from covered to uncovered states.

   In measurement mode, the actual measured capacitance is displayed. This gives an indication of which capacitance the output changes from a covered to uncovered state.
   If the output has once changed to uncovered and changes back to covered, the value must be decreased by setting the **Hysteresis** (menu item **L**).

5. Set a switch-point for the covered-to-uncovered change.
   Use the **Advanced** menu item **K** to set the switch-point to the established capacitance of an uncovered probe + an increase to the switch-point. See Advanced menu.

6. Set the **Hysteresis**.
   Use the **Advanced** menu item **L** to set the hysteresis. The factory setting is normally sufficient and does not need to be changed.

Need help?

If the actual measured capacitance is close to the limits of what the electronic can measure (400 pF with sensitivity setting **Low** or 100 pF with sensitivity setting **High**). See Maintenance and error messages.

After completing the task:

The Rosemount 2555 is now calibrated and ready to be used.

4.10.4 Manual calibration for uncovered and covered probes

Prerequisites

- The level switch must be correctly mounted and wired.
- The level of the solids material must be below the probe.
- Manual calibration must be set to **ON** (**Advanced** menu, item **K**)

Procedure

1. Review the stages in the calibration procedure.

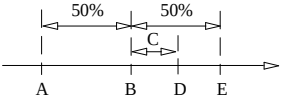

A. Capacitance of uncovered probe
B. Switching-point for covered-to-uncovered probe
C. Hysteresis
D. Switching-point for uncovered-to-covered probe
E. Capacitance of covered probe

---

2. Set the sensitivity.
Check for the required sensitivity range (low or high) depending on the material to be measured. Use the calibration guide. See Guide to manual calibration.
Use the **Advanced** menu item **H** to set the sensitivity. See Advanced menu.

3. Make a note of the actual measured capacitance displayed when the probe is uncovered.

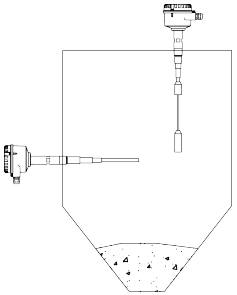

4. Make a note of the actual measured capacitance displayed when the probe is covered.
For vertical mounting (rope version), the solids material must cover the probe by 4 to 8 in. (10 to 20 cm).

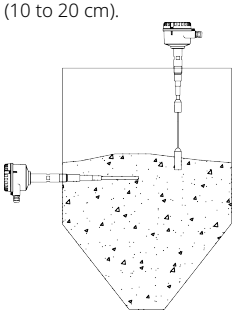

5. Set a switch-point for the covered-to-uncovered change.
Use the **Advanced** menu item **K** to set the switch point to:

(Capacitance$_{uncovered}$ +

(0.5 * (Capacitance$_{covered}$ - Capacitance$_{uncovered}$))
With Low sensitivity range (**Advanced** menu item **H**): If the difference between uncovered and covered probe is smaller than 4 pF, set either to **High** sensitivity or use a more sensitive probe (longer active probe). For rope version only a setting to **High** sensitivity range is possible.

With **High** sensitivity range (**Advanced** menu item **H**): If the difference between uncovered and covered probe is smaller than 1 pF, use a more sensitive probe (longer active probe). For rope version, call factory.

6. Set the Hysteresis.
   Use the **Advanced** menu item **L** to set the hysteresis. The factory setting is normally sufficient and does not need to be changed.

Need help?

If the actual measured capacitance is close to the limits of what the electronic can measure (400 pF with sensitivity setting **Low** or 100 pF with sensitivity setting **High**). See Maintenance and error messages.

After completing the task:

The Rosemount 2555 is now calibrated and ready to be configured.

5 Troubleshooting

5.1 Maintenance and error messages

The level switch indicates error messages while in measurement mode and during calibration routines.

Table 5-1: In Measurement Mode

Display	LED	Description	Possible causes and solutions
UR	Flashing red	Under Range Actual measured capacitance is lower than 3 pF.	Probe is defective or the probe is incorrectly wired. The signal output relay is de-energized.
OR	Flashing red	Over Range After changing the sensitivity from ≥ 2 pF to ≤ 1 pF.	Actual calibrated capacitance is higher than 100 pF and cannot be measured with Sensitivity setting ≤ 1 pF. Change to Sensitivity 2 pF (if DK of the material is high enough) or recalibrate.
ERR	Constant red	Auto or Manual Function Test error	Electronics fault. Replace the electronics. The output signal relay is de-energized.

Table 5-2: During Power-up or Push-button Calibration

Display	LED	Description	Possible causes and solutions
UR	Flashing red	Under Range Actual measured capacitance is lower than 3 pF.	Probe is defective or the probe is incorrectly wired. The signal output relay is de-energized.

Display	LED	Description	Possible causes and solutions
		Calibration is not possible.	
OR	Flashing red	Over Range. Actual measured capacitance is higher than 400 pF (sensitivity setting ≥ 2 pF) or 100 pF (sensitivity setting ≤ 1 pF). Calibration is not possible.	A long rope version in an empty silo may exceed 100 pF capacitance. Change Sensitivity setting to 2 pF if DK of the material is high enough. Probe may be covered with material. Ensure that the probe is uncovered. The probe may be faulty or incorrectly wired.
G.ON	Flashing red	**CAL** button pressed with Manual calibration set to **ON**. Starting a calibration using the push button is not possible.	Set Manual calibration to **OFF** when the push button is to be used for starting a calibration.

Table 5-3: During Manual Calibration

Display	LED	Description	Possible causes and solutions
100(1)	Yellow or green	With the sensitivity range set to high. Actual measured capacitance is close to, or higher than, 100 pF (depending on the capability of electronics). Calibration not possible.	A long rope version in an empty silo may exceed 100 pF capacitance. Change the sensitivity range to low if DK of the material is high enough. Probe may be covered with material. Ensure that probe is uncovered. The probe may be faulty or incorrectly wired.
400(2)	Yellow or green	With the sensitivity range set to low. Actual measured capacitance is close to, or higher than, 400 pF (depending on capability of electronics). Calibration is not possible.	Probe may be covered with material. Ensure that the probe is uncovered. The probe may be faulty or incorrectly wired.

(1) The display is showing 100 or close to 100.

(2) The display is showing 400 or close to 400.

5.2 General items

Table 5-4: General Items

Situation	Behavior of the electronic	Possible reason	Possible solution
Signal output state is 'probe covered' even though the solids material is below the probe.	The actual measured capacitance(1) is greater than the calibrated switching-point(2) for an uncovered-to-covered probe change of state.	The level switch is not properly calibrated.	Recalibrate.(3)
		Excessive material build-up on active probe.	Increase distance to wall (longer inactive length). Change the installation location. Recalibrate with less sensitivity(3).
		Faulty or incorrect probe wiring.	Check the probe wiring (see below).
Signal output state is 'uncovered probe' even though the solids material is above the probe.	The actual measured capacitance(3) is less than the calibrated switching-point(4) for an covered-to-uncovered probe change of state.	Calibration was done with covered probe.	Recalibrate(3).
		Calibration was performed with a sensitivity that was too low.	Recalibrate with higher sensitivity(3). Increase active probe length and recalibrate(3).
		Faulty or incorrect probe wiring.	Check the probe wiring (see below).

(1) The value can be seen on the display in Measurement mode.

*(2) The value can be seen in **Advanced** menu item **P**.*

(3) See the calibration guides.

*(4) The value can be seen in **Advanced** menu item **N**.*

5.3 Check the probe wiring

Prerequisites

The power supply to the level switch must be switched off.

Procedure

1. Clean away any deposits on the probe.
2. ⚠ Take out the electronic board and disconnect internal wires.

3. ⚠ Check the orange, yellow, and green/yellow wires with a multimeter.

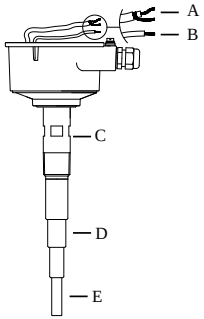

A. Orange (probe) and yellow (shield)
B. Green/yellow (ground)
C. Ground
D. Shield
E. Probe

Less than 5 Ohm must be present between:

- Orange wire and probe
- Yellow wire and shield
- Green/yellow wire and ground

More than 1 MΩ resistance must be present between:

- Orange and yellow wires
- Orange and green/yellow wires

If other values are present, the wiring of the probe is incorrect or defective.

6 Maintenance

6.1 Opening the lid (cover)

Before opening the lid for maintenance reasons, consider the following:

- Do not remove the lid in a hazardous area while circuits are live.
- Ensure that no dust deposits or airborne dusts are present.
- Ensure that rain does not enter the housing.

6.2 Regular checks for safety

To ensure robust safety in hazardous locations and with electrical safety, the following items must be regularly checked depending on the application:

- Mechanical damage or corrosion of the field wiring cables or any other components (housing side and sensor side).
- Tight sealing of the process connection, cable glands, and enclosure lid.
- Properly connected external PE cable (if present).

6.3 Cleaning

6.3.1 Cleaning

If cleaning is required by the application, following must be observed:

- Cleaning agent must comply with the materials of the unit (chemical resistance). Mainly the shaft sealing, lid sealing, cable gland and the surface of the unit must be considered.

The cleaning process must be done in a way, that:

- The cleaning agent cannot enter into the unit through the shaft sealing, lid sealing or cable gland.
- No mechanical damage of the shaft sealing, lid sealing, cable gland or other parts can happen.

Note

An accumulation of dust on the housing does not increase the surface temperature. However, dust can be safely removed with a damp cloth. See the Rosemount 2555 Product Certifications document for the maximum surface temperatures in hazardous area (classified locations) applications.

6.3.2 Cleaning (EHEDG design version)

Units with EHEDG certification (Type ED Class I), which are used in easy to clean and hygienic applications, must be cleaned dry only (Type ED Class I). Furthermore the respective regulations must be observed.

6.4 Function test

Depending on the application, frequent functional testing may be required. See Manual function test (proof test) for details.

6.5 Production date

The production year is shown on the nameplate.

6.6 Spare parts

Refer to the Rosemount 2555 Product Data Sheet for all spare parts.



Quick Start Guide
00825-0100-2555, Rev. AD
October 2026

For more information: Emerson.com

©2026 Emerson. All rights reserved.

Emerson Terms and Conditions of Sale are available upon request. The Emerson logo is a trademark and service mark of Emerson Electric Co. Rosemount is a mark of one of the Emerson family of business units. All other marks are the property of their respective owners.

ROSEMOUNT™

EMERSON™