Reference manual
00809-0100-4750, Rev AA
February 2018

Rosemount® 8750W Transmitter with HART Protocol Reference Manual



ROSEMOUNT™

EMERSON™

Contents

Chapter 1 Safety messages 1

Chapter 2 Introduction 5
2.1 System description 5
2.2 Product recycling/disposal 5

Chapter 3 Sensor Installation 7
3.1 Handling and Lifting Safety 7
3.2 Location and Position 8
3.3 Sensor installation 10
3.4 Process reference connection 15

Chapter 4 Remote Transmitter Installation 19
4.1 Pre-installation 19
4.2 Transmitter symbols 23
4.3 Mounting 24
4.4 Wiring 25

Chapter 5 Basic Configuration 45
5.1 Cover jam screw (field mount transmitter only) 45
5.2 Basic Setup 45
5.3 Local operator interface (LOI) 46
5.4 Field Communicator interface 46
5.5 Measurement units 47

Chapter 6 Advanced installation details 49
6.1 Hardware switches 49
6.2 Additional loops 53

Chapter 7 Operation 67
7.1 Introduction 67
7.2 Local operator interface (LOI) 67
7.3 Field Communicator interface 77

Chapter 8 Advanced Configuration Functionality 83
8.1 Introduction 83
8.2 Configure outputs 83
8.3 Configure HART 97
8.4 Configure LOI 100
8.5 Additional parameters 101
8.6 Configure special units 103

Chapter 9 Advanced Diagnostics Configuration 105
9.1 Introduction 105
9.2 Licensing and enabling 106
9.3 Tunable empty pipe detection 107
9.4 Electronics temperature 109
9.5 Ground/wiring fault detection 109
9.6 High process noise detection 110
9.7 Coated electrode detection 111
9.8 4-20 mA loop verification 113

9.9 SMART™ Meter Verification 114
9.10 Run manual SMART Meter Verification 117
9.11 Continuous SMART Meter Verification 118
9.12 SMART Meter Verification test results 119
9.13 SMART Meter Verification measurements 121
9.14 Optimizing the SMART Meter Verification 122

Chapter 10 Digital Signal Processing 125
10.1 Introduction 125
10.2 Safety messages 125
10.3 Process noise profiles 126
10.4 High process noise diagnostic 127
10.5 Optimizing flow reading in noisy applications 127
10.6 Explanation of signal processing algorithm 130

Chapter 11 Maintenance 133
11.1 Introduction 133
11.2 Safety information 133
11.3 Installing a Local Operator Interface (field mount) 134
11.4 Installing a local operator interface (wall mount) 135
11.5 Replacing electronics stack (field mount) 136
11.6 Replacing electronics stack (wall mount) 138
11.7 Replacing a socket module/terminal block 139
11.8 Trims 143
11.9 Review 145

Chapter 12 Troubleshooting 147
12.1 Introduction 147
12.2 Safety information 148
12.3 Installation check and guide 148
12.4 Diagnostic messages 150
12.5 Basic troubleshooting 159
12.6 Sensor troubleshooting 163
12.7 Installed sensor tests 165
12.8 Uninstalled sensor tests 167
12.9 Technical support 170
12.10 Service 171

Appendices and reference

Appendix A Product Specifications 173
A.1 Basic specifications 173
A.2 Transmitter specifications 176
A.3 Sensor specifications 185

Appendix B Product Certifications 191

Appendix C Wiring Diagrams 193
C.1 Installation and wiring drawings 194
C.2 775 Smart Wireless THUM™ Adapter wiring diagrams (field mount) 198
C.3 775 Smart Wireless THUM™ Adapter wiring diagrams (wall mount) 200
C.4 475 Field Communicator wiring diagrams (field mount) 202
C.5 Field Communicator wiring diagrams (wall mount) 204

1 Safety messages

⚠ WARNING!

General hazards. Failure to follow these instructions could result in death or serious injury.

- **Read this manual before working with the product. For personal and system safety, and for optimum product performance, make sure you thoroughly understand the contents before installing, using, or maintaining this product.**
- **Installation and servicing instructions are for use by qualified personnel only. Do not perform any servicing other than that contained in the operating instructions, unless qualified.**
- **Verify the installation is completed safely and is consistent with the operating environment.**
- **Do not substitute factory components with non-factory compenents. Substitution of components may impair Intrinsic Safety.**
- **Do not perform any services other than those contained in this manual.**
- **Process leaks may result in death or serious injury.**
- **Mishandling products exposed to a hazardous substance may result in death or serious injury.**
- **The electrode compartment may contain line pressure; it must be depressurized before the cover is removed.**
- **If the product being returned was exposed to a hazardous substance as defined by OSHA, a copy of the required Material Safety Data Sheet (MSDS) for each hazardous substance identified must be included with the returned goods.**
- **The products described in this document are NOT designed for nuclear-qualified applications. Using non-nuclear qualified products in applications that require nuclear-qualified hardware or products may cause inaccurate readings. For information on Rosemount nuclear-qualified products, contact your local Emerson Process Management Sales Representative.**

⚠ WARNING!

Explosion hazards. Failure to follow these instructions could cause an explosion, resulting in death or serious injury.

- **If installed in explosive atmospheres [hazardous areas, classified areas, or an "Ex" environment], it must be assured that the device certification and installation techniques are suitable for that particular environment.**
- **Do not remove transmitter covers in explosive atmospheres when the circuit is live. Both transmitter covers must be fully engaged to meet explosion-proof requirements.**
- **Do not disconnect equipment when a flammable or combustible atmosphere is present.**
- **Do not connect a Rosemount transmitter to a non-Rosemount sensor that is located in an explosive atmosphere. The transmitter has not been evaluated for use with other manufacturers' magnetic flowmeter sensors in hazardous (Ex or Classified) areas. Special care should be taken by the end-user and installer to ensure the transmitter meets the safety and performance requirements of the other manufacturer's equipment.**
- **Follow national, local, and plant standards to properly earth ground the transmitter and sensor. The earth ground must be separate from the process reference ground.**
- **Rosemount Magnetic Flowmeters ordered with non-standard paint options or non-metallic labels may be subject to electrostatic discharge. To avoid electrostatic charge build-up, do not rub the flowmeter with a dry cloth or clean with solvents.**

⚠ WARNING!

Electrical hazards. Failure to follow these instructions could cause damaging and unsafe discharge of electricity, resulting in death or serious injury.

- **Follow national, local, and plant standards to properly earth ground the transmitter and sensor. The earth ground must be separate from the process reference ground.**
- **Disconnect power before servicing circuits.**
- **Allow ten minutes for charge to dissipate prior to removing electronics compartment cover. The electronics may store energy in this period immediately after power is removed.**
- **Avoid contact with leads and terminals. High voltage that may be present on leads could cause electrical shock.**
- **Rosemount Magnetic Flowmeters ordered with non-standard paint options or non-metallic labels may be subject to electrostatic discharge. To avoid electrostatic charge build-up, do not rub the flowmeter with a dry cloth or clean with solvents.**

NOTICE

Damage hazards. Failure to follow these instructions could resulting damage or destruction of equipment.

- **The sensor liner is vulnerable to handling damage. Never place anything through the sensor for the purpose of lifting or gaining leverage. Liner damage may render the sensor inoperable.**
- **Metallic or spiral-wound gaskets should not be used as they will damage the liner face of the sensor. If spiral wound or metallic gaskets are required for the application, lining protectors must be used. If frequent removal is anticipated, take precautions to protect the liner ends. Short spool pieces attached to the sensor ends are often used for protection.**
- **Correct flange bolt tightening is crucial for proper sensor operation and life. All bolts must be tightened in the proper sequence to the specified torque specifications. Failure to observe these instructions could result in severe damage to the sensor lining and possible sensor replacement.**
- **In cases where high voltage/high current are present near the meter installation, ensure proper protection methods are followed to prevent stray electricity from passing through the meter. Failure to adequately protect the meter could result in damage to the transmitter and lead to meter failure.**
- **Completely remove all electrical connections from both sensor and transmitter prior to welding on the pipe. For maximum protection of the sensor, consider removing it from the pipeline.**
- **Do not connect mains or line power to the magnetic flowtube sensor or to the transmitter coil excitation circuit.**

2 Introduction

Topics covered in this chapter:

- *System description*
- *Product recycling/disposal*

2.1 System description

The flow sensor contains two magnetic coils located on opposite sides of the sensor. Two electrodes, located perpendicular to the coils and opposite each other, make contact with the liquid. The transmitter energizes the coils and creates a magnetic field. A conductive liquid moving through the magnetic field generates an induced voltage at the electrodes. This voltage is proportional to the flow velocity. The transmitter converts the voltage detected by the electrodes into a flow reading. A cross-sectional view is show in *Figure 2-1*.

Figure 2-1: Sensor cross section



2.2 Product recycling/disposal

Recycling of equipment and packaging should be taken into consideration and disposed of in accordance with local and national legislation/regulations.

3 Sensor Installation

Topics covered in this chapter:

- *Handling and Lifting Safety*
- *Location and Position*
- *Sensor installation*
- *Process reference connection*

Related information

Remote Transmitter Installation

3.1 Handling and Lifting Safety

⚠ CAUTION!

To reduce the risk of personal injury or damage to equipment, follow all lifting and handling instructions.

- **Handle all parts carefully to prevent damage. Whenever possible, transport the system to the installation site in the original shipping container.**
- **PTFE-lined sensors are shipped with end covers that protect it from both mechanical damage and normal unrestrained distortion. Remove the end covers just before installation.**
- **Keep the shipping plugs in the conduit ports until you are ready to connect and seal them. Appropriate care should be taken to prevent water ingress.**
- **The sensor should be supported by the pipeline. Pipe supports are recommended on both the inlet and outlet sides of the sensor pipeline. There should be no additional support attached to the sensor.**
- **Use proper PPE (Personal Protection Equipment) including safety glasses and steel toed shoes.**
- **Do not lift the meter by holding the electronics housing or junction box.**
- **The sensor liner is vulnerable to handling damage. Never place anything through the sensor for the purpose of lifting or gaining leverage. Liner damage can render the sensor useless.**
- **Do not drop the device from any height.**

3.2 Location and Position

3.2.1 Environmental considerations

To ensure maximum transmitter life, avoid extreme temperatures and excessive vibration. Typical problem areas include the following:

- High-vibration lines with integrally mounted transmitters
- Tropical/desert installations in direct sunlight
- Outdoor installations in arctic climates

Remote mounted transmitters may be installed in the control room to protect the electronics from the harsh environment and to provide easy access for configuration or service.

3.2.2 Upstream and downstream piping

To ensure specified accuracy over widely varying process conditions, install the sensor with a minimum of five straight pipe diameters upstream and two pipe diameters downstream from the electrode plane.

Figure 3-1: Upstream and downstream straight pipe diameters

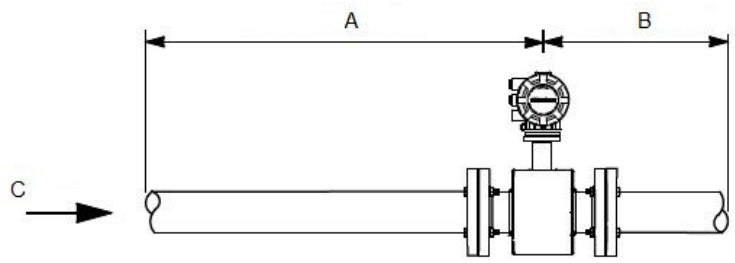

A. Five pipe diameters (upstream)
B. Two pipe diameters (downstream)
C. Flow direction

Installations with reduced upstream and downstream straight runs are possible. In reduced straight run installations, the meter may not meet absolute accuracy specifications. Reported flow rates will still be highly repeatable.

3.2.3 Flow direction

The sensor should be mounted so that the arrow points in the direction of flow.

Figure 3-2: Flow direction arrow



3.2.4 Sensor piping location and orientation

The sensor should be installed in a location that ensures it remains full during operation. Depending on where it is installed, orientation must also be considered.

- Vertical installation with upward process fluid flow keeps the cross-sectional area full, regardless of flow rate.
- Horizontal installation should be restricted to low piping sections that are normally full.

Figure 3-3: Sensor orientation

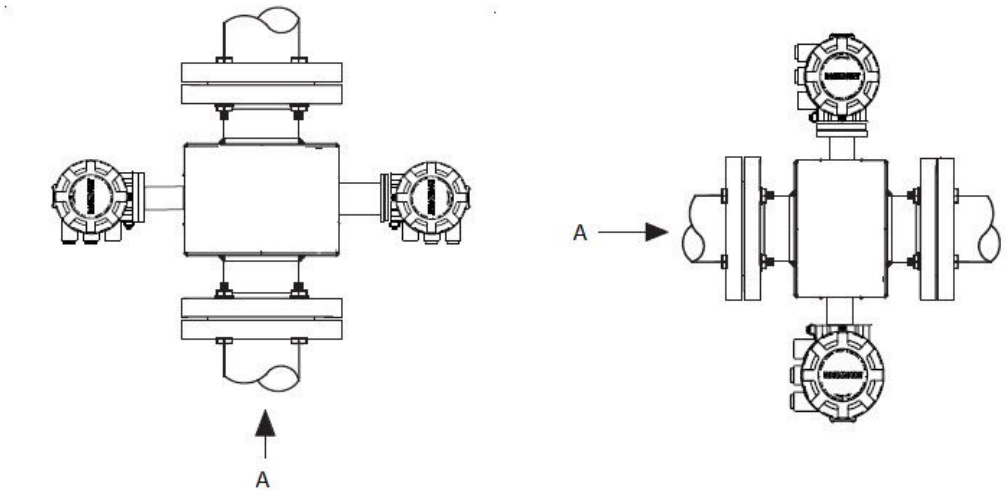

A. Flow direction

3.2.5 Electrode orientation

The electrodes in the sensor are properly oriented when the two measurement electrodes are in the 3 and 9 o'clock positions or within 45 degrees from the horizontal, as shown on the left side of *Figure 3-4*. Avoid any mounting orientation that positions the top of the sensor at 90 degrees from the vertical position as shown on the right of the Electrode Orientation figure.

Figure 3-4: Electrode orientation

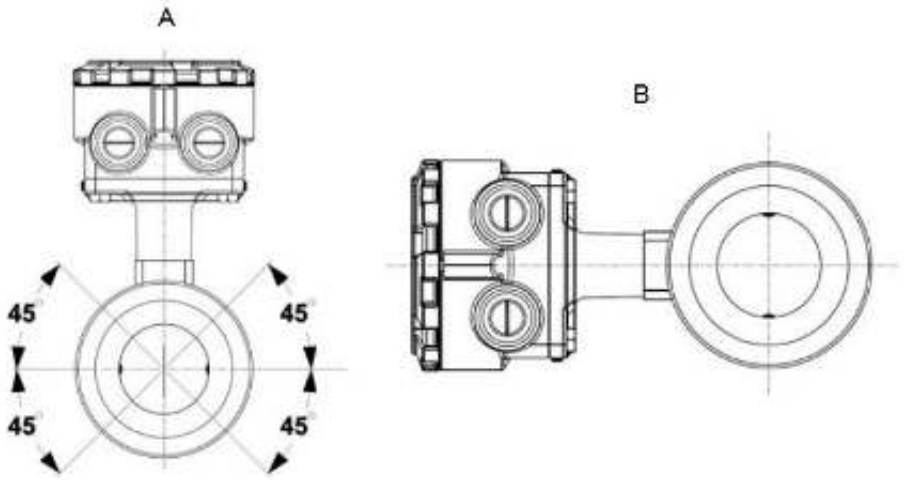

A. Correct orientation
B. Incorrect orientation

The sensor may require a specific orientation to comply with Hazardous Area T-code rating. Refer to the approrpirate reference manual for any potential restrictions.

3.3 Sensor installation

Gaskets

The sensor requires a gasket at each process connection. The gasket material must be compatible with the process fluid and operating conditions. Gaskets are required on each side of a grounding ring (see *Figure 3-5*). All other applications (including sensors with lining protectors or a grounding electrode) require only one gasket on each process connection.

Note

Metallic or spiral-wound gaskets should not be used as they will damage the liner face of the sensor. If spiral wound or metallic gaskets are required for the application, lining protectors must be used.

Figure 3-5: Gasket placement for flanged sensors

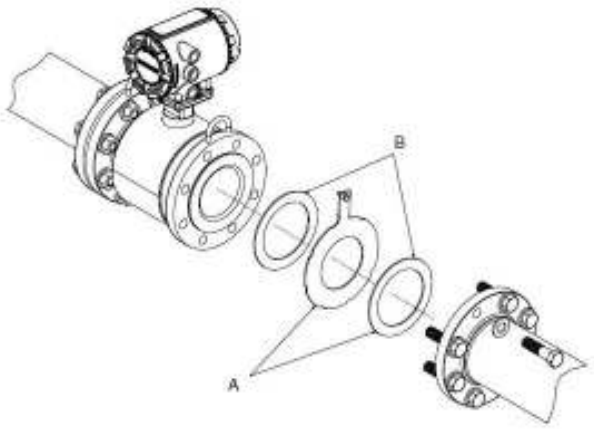

A. Grounding ring and gasket (optional)
B. Customer-supplied gasket

Bolts

Note

Do not bolt one side at a time. Tighten both sides simultaneously. Example:

1. Snug upstream
2. Snug downstream
3. Tighten upstream
4. Tighten downstream

Do not snug and tighten the upstream side and then snug and tighten the downstream side. Failure to alternate between the upstream and downstream flanges when tightening bolts may result in liner damage.

Suggested torque values by sensor line size and liner type are listed in *Table 3-2* for ASME B16.5 flanges and *Table 3-3* or *Table 3-4* for EN flanges. Consult the factory if the flange rating of the sensor is not listed. Tighten flange bolts on the upstream side of the sensor in the incremental sequence shown in *Figure 3-6* to 20% of the suggested torque values. Repeat the process on the downstream side of the sensor. For sensors with greater or fewer flange bolts, tighten the bolts in a similar crosswise sequence. Repeat this entire tightening sequence at 40%, 60%, 80%, and 100% of the suggested torque values.

If leakage occurs at the suggested torque values, the bolts can be tightened in additional 10% increments until the joint stops leaking, or until the measured torque value reaches the maximum torque value of the bolts. Practical consideration for the integrity of the liner often leads to distinct torque values to stop leakage due to the unique combinations of flanges, bolts, gaskets, and sensor liner material.

Check for leaks at the flanges after tightening the bolts. Failure to use the correct tightening methods can result in severe damage. While under pressure, sensor materials may deform over time and require a second tightening 24 hours after the initial installation.

Figure 3-6: Flange bolt torquing sequence

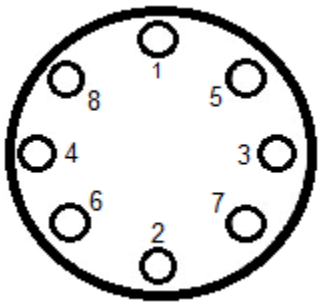

Prior to installation, identify the lining material of the flow sensor to ensure the suggested torque values are applied.

Table 3-1: Lining material

Fluoropolymer liners	Non-fluoropolymer liners	
T - PTFE	P - Polyurethane	

Table 3-2: Suggested flange bolt torque values for Rosemount 8750W (ASME)

Size Code	Line Size	Fluoropolymer liners		Other liners	
		Class 150 (pound-feet)	Class 300 (pound-feet)	Class 150 (pound-feet)	Class 300 (pound-feet)
005	0.5-in. (15 mm)	8	8	N/A	N /A
010	1-in. (25 mm)	8	12	6	10
015	1.5-in. (40 mm)	13	25	7	18
020	2-in. (50 mm)	19	17	14	11
025	2.5-in. (65 mm)	22	24	17	16
030	3-in. (80 mm)	34	35	23	23
040	4-in. (100 mm)	26	50	17	32
050	5-in. (125 mm)	36	60	25	35
060	6-in. (150 mm)	45	50	30	37
080	8-in. (200 mm)	60	82	42	55
100	10-in. (250 mm)	55	80	40	70
120	12-in. (300 mm)	65	125	55	105

Table 3-2: Suggested flange bolt torque values for Rosemount 8750W (ASME) ***(continued)***

Size Code	Line Size	Fluoropolymer liners		Other liners	
		Class 150 (pound-feet)	Class 300 (pound-feet)	Class 150 (pound-feet)	Class 300 (pound-feet)
140	14-in. (350 mm)	85	110	70	95
160	16-in. (400 mm)	85	160	65	140
180	18-in. (450 mm)	120	170	95	150
200	20-in. (500 mm)	110	175	90	150
240	24-in. (600 mm)	165	280	140	250
300	30-in. (750 mm)	195	415	165	375
360	36-in. (900 mm)	280	575	245	525

Table 3-3: Suggested flange bolt torque values for Rosemount 8750W sensors with fluoropolymer liners (EN 1092-1)

Size code	Line size	Fluoropolymer liners (in Newton-meters)			
		PN 10	PN 16	PN 25	PN 40
005	0.5-in. (15 mm)	N/A	N/A	N/A	10
010	1-in. (25 mm)	N/A	N/A	N/A	20
015	1.5-in. (40 mm)	N/A	N/A	N/A	50
020	2-in. (50 mm)	N/A	60	N/A	60
025	2.5-in. (65 mm)	N/A	50	N/A	50
030	3-in. (80 mm)	N/A	50	N/A	50
040	4-in. (100 mm)	N/A	50	N/A	70
050	5.0-in. (125 mm)	N/A	70	N/A	100
060	6-in. (150mm)	N/A	90	N/A	130
080	8-in. (200 mm)	130	90	130	170
100	10-in. (250 mm)	100	130	190	250
120	12-in. (300 mm)	120	170	190	270
140	14-in. (350 mm)	160	220	320	410
160	16-in. (400 mm)	220	280	410	610
180	18-in. (450 mm)	190	340	330	420
200	20-in. (500 mm)	230	380	440	520
240	24-in. (600 mm)	290	570	590	850

Table 3-4: Suggested flange bolt torque values for Rosemount 8750W sensors with non-fluoropolymer liners (EN 1092-1)

Size Code	Line Size	Non-fluoropolymer liners (in Newton-meters)			
		PN 10	PN 16	PN 25	PN 40
005	0.5-in. (15 mm)	N/A	N/A	N/A	20
010	1-in. (25 mm)	N/A	N/A	N/A	30
015	1.5-in. (40 mm)	N/A	N/A	N/A	40
020	2-in. (50 mm)	N/A	30	N/A	30
025	2.5-in. (65 mm)	N/A	35	N/A	35
030	3-in. (80 mm)	N/A	30	N/A	30
040	4-in. (100 mm)	N/A	40	N/A	50
050	5.0-in. (125 mm)	N/A	50	N/A	70
060	6-in. (150mm)	N/A	60	N/A	90
080	8-in. (200 mm)	90	60	90	110
100	10-in. (250 mm)	70	80	130	170
120	12-in. (300 mm)	80	110	130	180
140	14-in. (350 mm)	110	150	210	288
160	16-in. (400 mm)	150	190	280	410
180	18-in. (450 mm)	130	230	220	280
200	20-in. (500 mm)	150	260	300	350
240	24-in. (600 mm)	200	380	390	560

Table 3-5: Suggested flange bolt torque values for Rosemount 8750W with fluoropolymer liners (AWWA C207)

Size Code	Line Size	Class D (pound-feet)	Class E (pound-feet)	Class F (pound-feet)
300	30-in. (750 mm)	195	195	195
360	36-in. (900 mm)	280	280	280

Table 3-6: Suggested flange bolt torque values for Rosemount 8750W with non-fluoropolymer liners (AWWA C207)

Size Code	Line Size	Class D (pound-feet)	Class E (pound-feet)	Class F (pound-feet)
300	30-in. (750 mm)	165	165	165
360	36-in. (900 mm)	245	245	245
400	40-in. (1000 mm)	757	757	N/A
420	42-in. (1050 mm)	839	839	N/A

Table 3-6: Suggested flange bolt torque values for Rosemount 8750W with non-fluoropolymer liners (AWWA C207) *(continued)*

Size Code	Line Size	Class D (pound-feet)	Class E (pound-feet)	Class F (pound-feet)
480	48-in (1200 mm)	872	872	N/A

3.4 Process reference connection

The figures shown in this chapter illustrate process reference connections only. Earth safety ground is also required as part of this installation, but is not shown in the figures. Follow national, local, and plant electrical codes for safety ground.

Use the Process reference options table to determine which process reference option to follow for proper installation.

Table 3-7: Process reference options

Type of pipe	Grounding straps	Grounding rings	Reference electrode	Lining protectors
Conductive unlined pipe	See *Figure 3-7*	See *Figure 3-8*	See *Figure 3-10*	See *Figure 3-8*
Conductive lined pipe	Insufficient grounding	See *Figure 3-8*	See *Figure 3-7*	See *Figure 3-8*
Non-conductive pipe	Insufficient grounding	See *Figure 3-9*	Not recommended	See *Figure 3-9*

Note

For line sizes 10-inch and larger the ground strap may come attached to the sensor body near the flange. See *Figure 3-11*.

Figure 3-7: Grounding straps in conductive unlined pipe or reference electrode in lined pipe

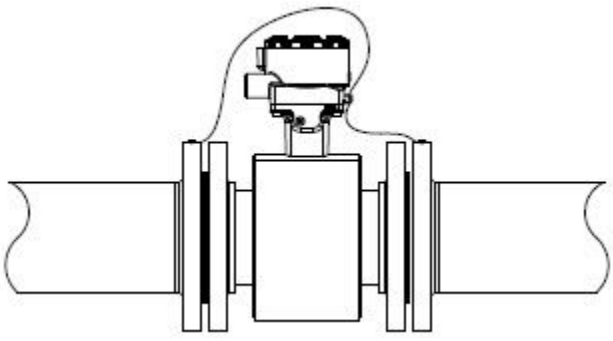

Figure 3-8: Grounding with grounding rings or lining protectors in conductive pipe

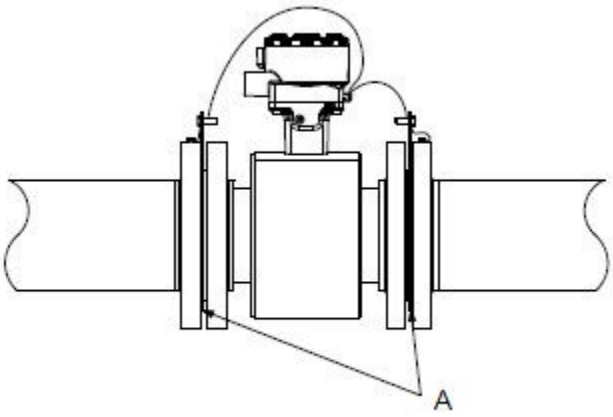

A. Grounding rings or lining protectors

Figure 3-9: Grounding with grounding rings or lining protectors in non-conductive pipe

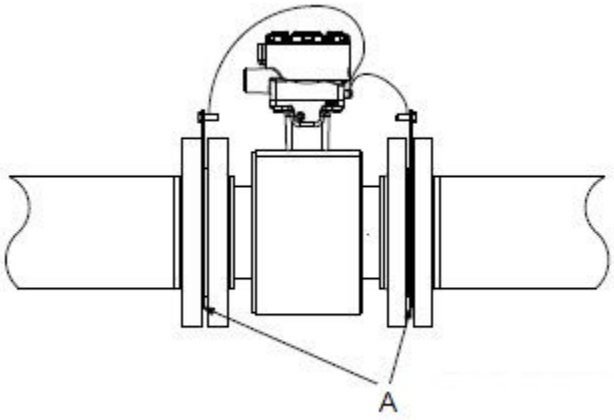

A. Grounding rings or lining protectors

Figure 3-10: Grounding with reference electrode in conductive unlined pipe

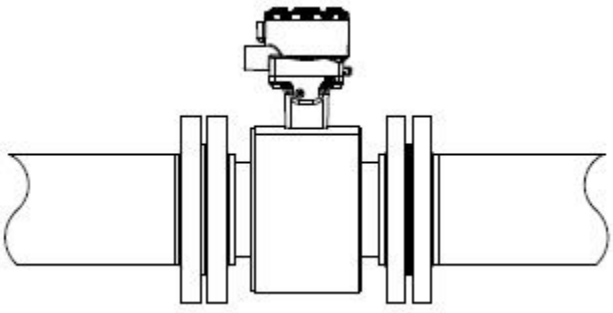

Figure 3-11: Grounding for line sizes 10-in. and larger

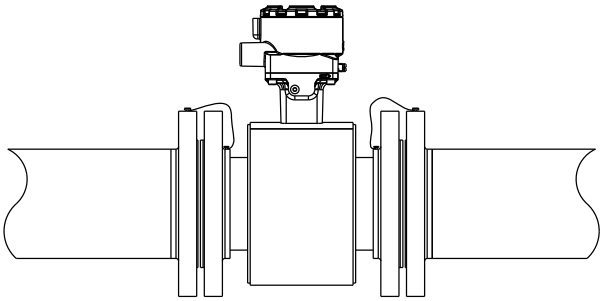

4 Remote Transmitter Installation

Topics covered in this chapter:

- *Pre-installation*
- *Transmitter symbols*
- *Mounting*
- *Wiring*

This chapter provides instructions for installing and wiring a remotely mounted transmitter.

Related information

Sensor Installation

4.1 Pre-installation

Before installing the transmitter, there are several pre-installation steps that should be completed to make the installation process easier:

- Identify options and configurations that apply to your application
- Set the hardware switches if necessary
- Consider mechanical, electrical, and environmental requirements

Note

Refer to *Appendix A* for more detailed requirements.

Identify options and configurations

The typical transmitter installation includes a device power connection, a 4-20mA output connection, and sensor coil and electrode connections. Other applications may require one or more of the following configurations or options

- Pulse output
- Discrete input/discrete output
- HART multidrop configuration

Hardware switches

The transmitter may have up to four user-selectable hardware switches. These switches set the alarm mode, internal/external analog power, internal/external pulse power, and transmitter security. The standard configuration for these switches when shipped from the factory is as follows:

Table 4-1: Hardware switch default settings

Setting	Factory configuration
Alarm mode	High
Internal/external analog power	Internal
Internal/external pulse power	External
Transmitter security	Off

In most cases, it is not necessary to change the setting of the hardware switches. If the switch settings need to be changed, refer to *Section 6.1*.

Be sure to identify any additional options and configurations that apply to the installation. Keep a list of these options for consideration during the installation and configuration procedures.

Mechanical considerations

The mounting site for the transmitter should provide enough room for secure mounting, easy access to conduit entries, full opening of the transmitter covers, and easy readability of the Local Operator Interface (LOI) screen (if equipped).

Figure 4-1: Field mount transmitter dimensional drawing

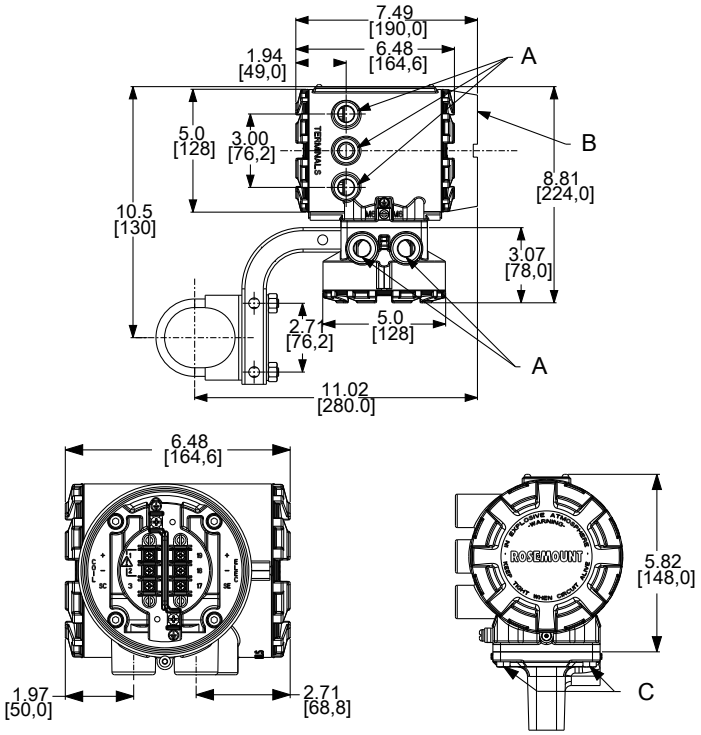

A. Conduit entry ½–14 NPT or M20
B. LOI cover
C. Mounting screws

Figure 4-2: Wall mount transmitter dimensional drawing

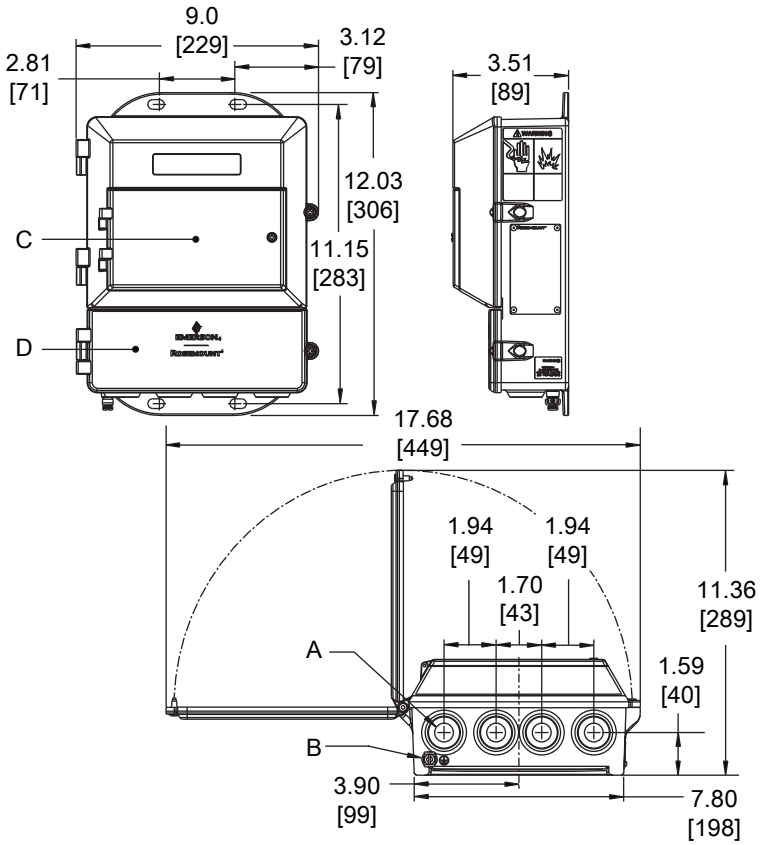

A. Conduit entry, 1/2-14 NPT (4 places)
B. Ground lug
C. LOI keypad cover
D. Lower cover opens for electrical connections

Note
Dimensions are in inches [Millimeters]

Electrical considerations

Before making any electrical connections to the transmitter, consider national, local, and plant electrical installation requirements. Be sure to have the proper power supply, conduit, and other accessories necessary to comply with these standards.

The transmitter requires external power. Ensure access to a suitable power source.

Table 4-2: Electrical Data

Wall mount and field mount transmitter	
Power input	AC power: 90–250VAC, 0.45A, 40VA
	Standard DC power: 12–42VDC, 1.2A, 15W
	Low power DC: 12–30VDC, 0.25A, 3W
Pulsed circuit	Internally powered (Active): Outputs up to 12VDC, 12.1mA, 73mW Externally powered (Passive): Input up to 28VDC, 100mA, 1W
4-20mA output circuit	Internally Powered (Active): Outputs up to 25mA, 24VDC, 600mW Externally Powered (Passive): Input up to 25mA, 30VDC, 750mW
Um	250V
Coil excitation output	500mA, 40V max, 9W max

Environmental considerations

To ensure maximum transmitter life, avoid extreme temperatures and excessive vibration. Typical problem areas include the following:

- Tropical or desert installations in direct sunlight
- Outdoor installations in arctic climates

Remote mounted transmitters may be installed in the control room to protect the electronics from the harsh environment and to provide easy access for configuration or service.

4.2 Transmitter symbols

Caution symbol — check product documentation for details	
Protective conductor (grounding) terminal	

4.3 Mounting

Remote-mount transmitters are shipped wth a mounting bracket for use on a 2-in. pipe or a flat surface.

Figure 4-3: Field mount transmitter mounting hardware

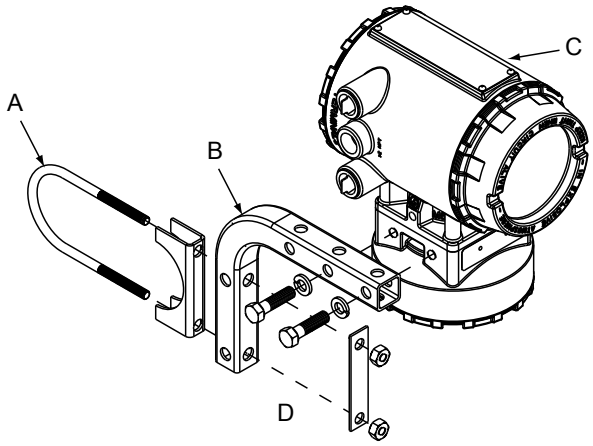

A. U-bolt
B. Mounting bracket
C. Transmitter
D. Fasteners (example configuration)

Figure 4-4: Wall mount transmitter mounting hardware

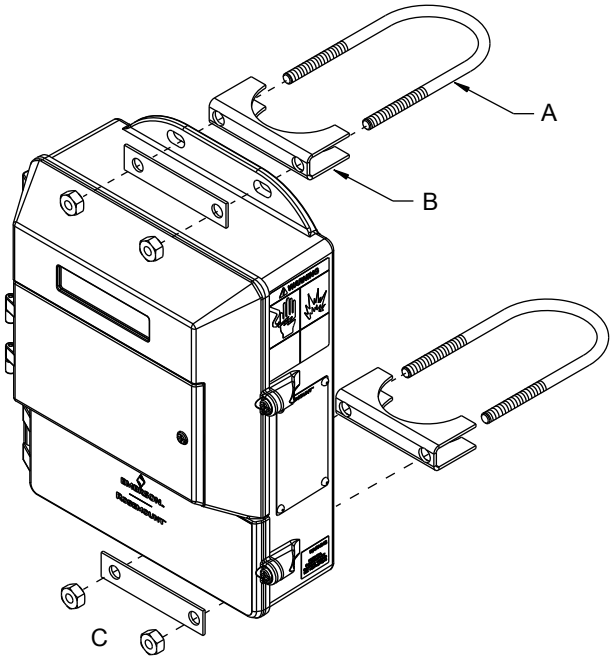

A. U-bolt
B. Saddle clamp
C. Fasteners

Procedure

1. Assemble the hardware as needed to accommodate the mounting configuration.
2. Secure the transmitter to the mounting hardware.

Postrequisites

For field mount style transmitters, the LOI can be rotated in 90 degree increments up to 180 degrees if desired. Do not rotate more than 180 degrees in any one direction.

4.4 Wiring

4.4.1 Conduit entries and connections

Transmitter conduit entry ports can be ordered with ½"-14NPT or M20 female threaded connections. Conduit connections should be made in accordance with national, local, and plant electrical codes. Unused conduit entries should be sealed with the appropriate certified plugs. The plastic shipping plugs do not provide ingress protection.

4.4.2 Conduit requirements

- For installations with an intrinsically safe electrode circuit, a separate conduit for the coil cable and the electrode cable may be required.
- For installations with non-intrinsically safe electrode circuit, or when using the combination cable, a single dedicated conduit run for the coil drive and electrode cable between the sensor and the remote transmitter may be acceptable. Removal of the barriers for intrinsic safety isolation is permitted for non-intrinsically safe electrode installations.
- Bundled cables from other equipment in a single conduit are likely to create interference and noise in the system. See *Figure 4-5* and *Figure 4-6*.
- Electrode cables should not be run together in the same cable tray with power cables.
- Output cables should not be run together with power cables.
- Select conduit size appropriate to feed cables through to the flowmeter.

Figure 4-5: Best practice conduit preparation (field mount)

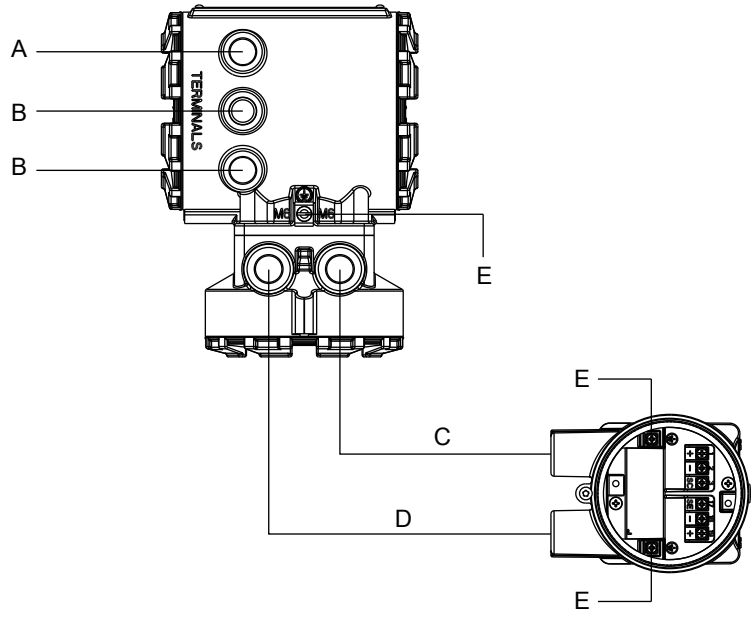

A. Power
B. Output
C. Coil
D. Electrode
E. Safety ground

Figure 4-6: Best practice conduit preparation (wall mount)

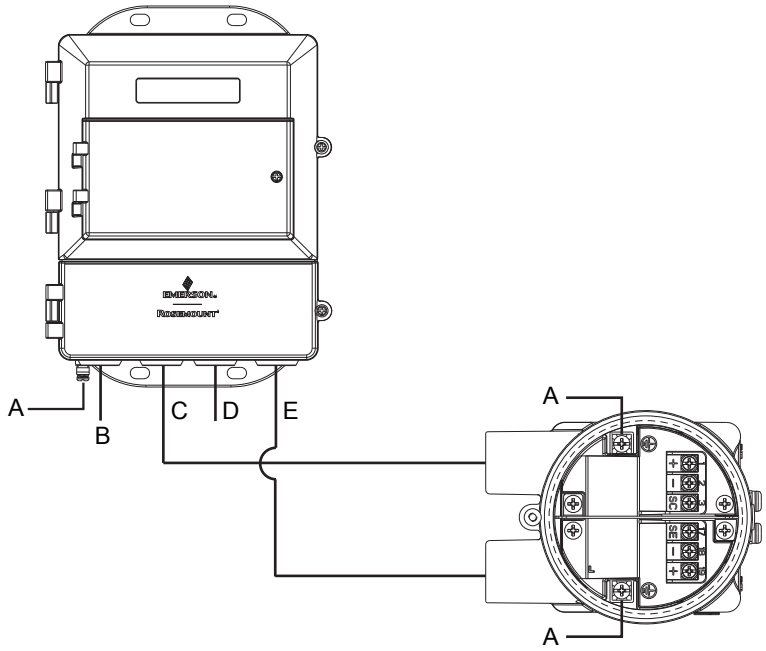

A. Safety ground
B. Power
C. Coil
D. Output
E. Electrode

4.4.3 Sensor to transmitter wiring

Integral mount transmitters

Integral mount transmitters ordered with a sensor will be shipped assembled and wired at the factory using an interconnecting cable. Use only the factory supplied cable provided with the instrument. For replacement transmitters use the existing interconnecting cable from the original assembly. Replacement cables, if applicable, are available (see *Figure 4-7*).

Figure 4-7: Replacement interconnecting cables

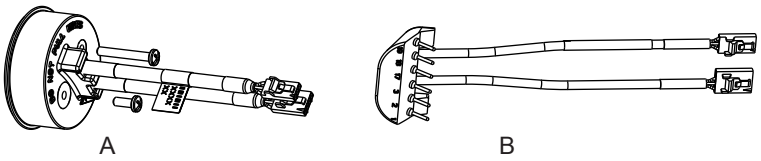

A. Socket module 08732-CSKT-0001
B. IMS cable 08732-CSKT-0004

Remote mount transmitters

Cables kits are available as individual component cables or as a combination coil/electrode cable. Remote cables can be ordered directly using the kit numbers shown in *Table 4-3*, *Table 4-4*, and *Table 4-5*. Equivalent Alpha cable part numbers are also provided as an alternative. To order cable, specify length as quantity desired. Equal length of component cables is required.

Examples:

- 25 feet = Qty (25) 08732-0065-0001
- 25 meters = Qty (25) 08732-0065-0002

Table 4-3: Component cable kits - standard temperature (-20°C to 75°C)

Cable kit #	Description	Individual cable	Alpha p/n
08732-0065-0001 (feet)	Kit, component cables, Std temp (includes Coil and Electrode)	Coil Electrode	2442C 2413C
08732-0065-0002 (meters)	Kit, component cables, Std temp (includes Coil and Electrode)	Coil Electrode	2442C 2413C
08732-0065-0003 (feet)	Kit, component cables, Std temp (includes Coil and I.S. Electrode)	Coil Instrinsically Safe Blue Electrode	2442C Not available
08732-0065-0004 (meters)	Kit, component cables, Std temp (includes Coil and I.S. Electrode)	Coil Instrinsically Safe Blue Electrode	2442C Not available

Table 4-4: Component cable kits - extended temperature (-50°C to 125°C)

Cable kit #	Description	Individual cable	Alpha p/n
08732-0065-1001 (feet)	Kit, Component Cables, Ext Temp. (includes Coil and Electrode)	Coil Electrode	Not available Not available

Table 4-4: Component cable kits - extended temperature (-50°C to 125°C) *(continued)*

Cable kit #	Description	Individual cable	Alpha p/n
08732-0065-1002 (meters)	Kit, Component Cables, Ext Temp. (includes Coil and Electrode)	Coil Electrode	Not available Not available
08732-0065-1003 (feet)	Kit, Component Cables, Ext Temp. (includes Coil and I.S. Electrode)	Coil Intrinsically Safe Blue Electrode	Not available Not available
08732-0065-1004 (meters)	Kit, Component Cables, Ext Temp. (includes Coil and I.S. Electrode)	Coil Intrinsically Safe Blue Electrode	Not available Not available

Table 4-5: Combination cable kits - coil and electrode cable (-20°C to 80°C)

Cable kit #	Description
08732-0065-2001 (feet)	Kit, Combination Cable, Standard
08732-0065-2002 (meters)	
08732-0065-3001 (feet)	Kit, Combination Cable, Submersible (80°C dry/60°C Wet) (33ft Continuous)
08732-0065-3002 (meters)	

Cable requirements

Shielded twisted pairs or triads must be used. For installations using the individual coil drive and electrode cable, see *Figure 4-8*. Cable lengths should be limited to less than 500 feet (152 m). Consult factory for length between 500–1000 feet (152–304 m). Equal length cable is required for each. For installations using the combination coil drive/ electrode cable, see *Figure 4-9*. Combination cable lengths should be limited to less than 330 feet (100 m).

Figure 4-8: Individual component cables

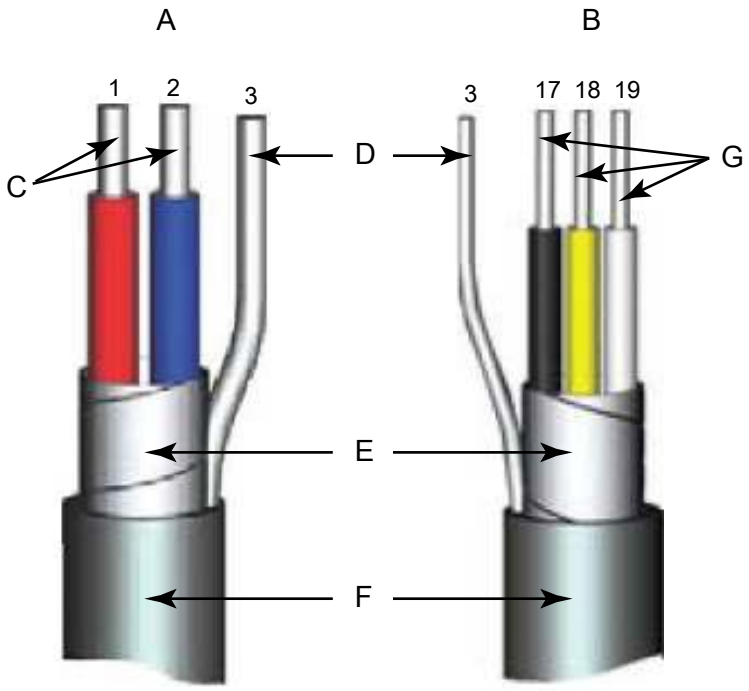

A. Coil drive
B. Electrode
C. Twisted, stranded, insulated 14 AWG conductors
D. Drain
E. Overlapping foil shield
F. Outer jacket
G. Twisted, stranded, insulated 20 AWG conductors

- *1 = Red*
- *2 = Blue*
- *3 = Drain*
- *17 = Black*
- *18 = Yellow*
- *19 = White*

Figure 4-9: Combination coil and electrode cable

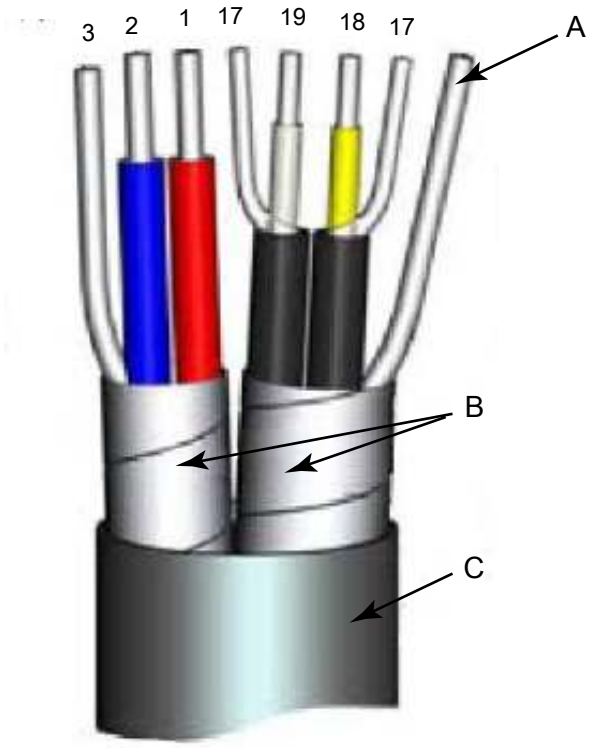

A. Electrode shield drain
B. Overlapping foil shield
C. Outer jacket

- *1 = Red*
- *2 = Blue*
- *3 = Drain*
- *17 = Reference*
- *18 = Yellow*
- *19 = White*

Cable preparation

Prepare the ends of the coil drive and electrode cables as shown in *Figure 4-10*. Remove only enough insulation so that the exposed conductor fits completely under the terminal connection. Best practice is to limit the unshielded length (D) of each conductor to less than one inch. Excessive removal of insulation may result in an unwanted electrical short to the transmitter housing or other terminal connections. Excessive unshielded length, or failure to connect cable shields properly, may also expose the unit to electrical noise, resulting in an unstable meter reading.

Figure 4-10: Cable ends

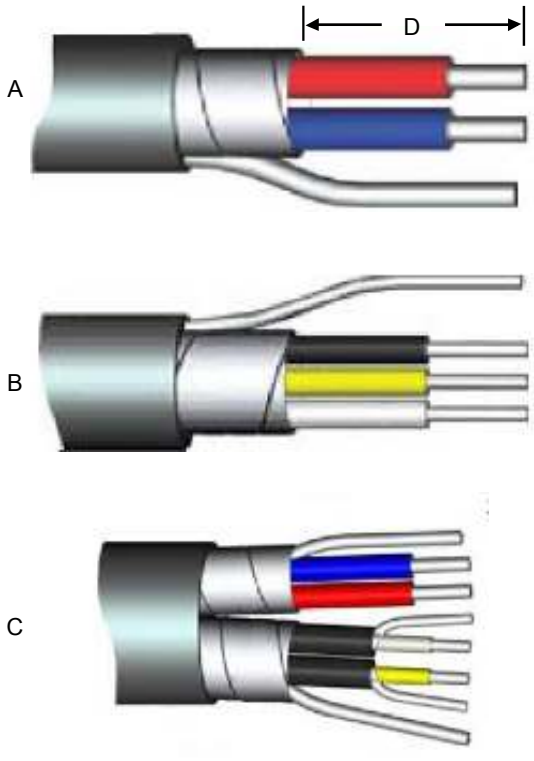

A. Coil
B. Electrode
C. Combination
D. Unshielded length

⚠ WARNING!

Shock hazard! Potential shock hazard across remote junction box terminals 1 and 2 (40V).

⚠ WARNING!

Explosion hazard! Electrodes exposed to process. Use only compatible transmitter and approved installation practices. For process temperatures greater than 284°F (140°C), use a wire rated for 257°F (125°C).

Remote junction box terminal blocks

Figure 4-11: Remote junction box views (field mount)

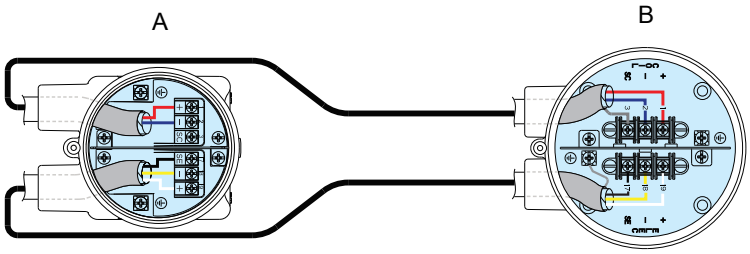

A. Sensor
B. Transmitter

Figure 4-12: Remote junction box views (wall mount)

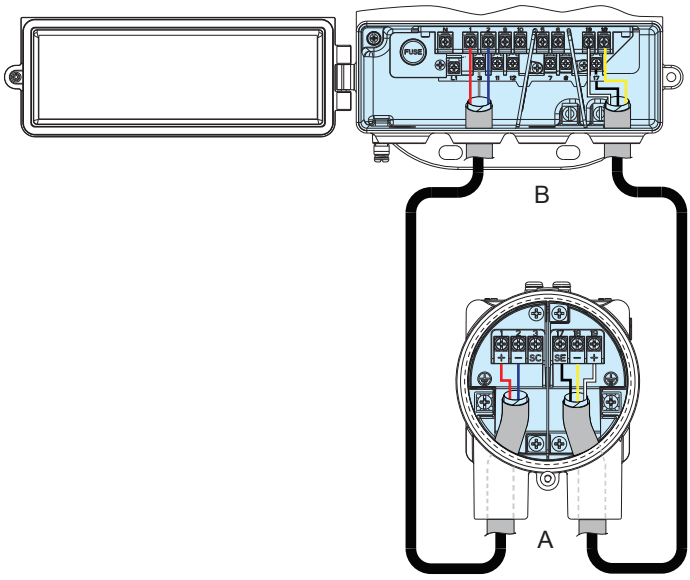

A. Sensor
B. Transmitter

Table 4-6: Sensor/transmitter wiring

Wire color	Sensor terminal	Transmitter terminal
Red	1	1
Blue	2	2
Shield	3 or Float	3
Black	17	17
Yellow	18	18

Table 4-6: Sensor/transmitter wiring *(continued)*

Wire color	Sensor terminal	Transmitter terminal
White	19	19

Note

For hazardous locations, refer to *Appendix B*.

4.4.4 Power and I/O terminal blocks (field mount)

Remove the back cover of the transmitter to access the terminal block.

Note

To connect pulse output and/or discrete input/output, and for installations with intrinsically safe outputs, refer to *Appendix B*.

Figure 4-13: Terminal blocks (field mount)

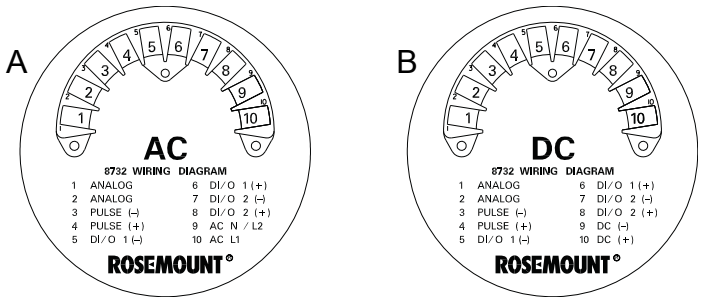

A. AC version

B. DC version

Table 4-7: Power and I/O terminals (field mount transmitter)

Terminal number	AC version	DC version
1	Analog (mA output)	Analog (mA output)
2	Analog (mA output)	Analog (mA output)
3	Pulse (–)	Pulse (–)
4	Pulse (+)	Pulse (+)
5(1)	Discrete I/O 1 (–)	Discrete I/O 1 (–)
6(1)	Discrete I/O 1 (+)	Discrete I/O 1 (+)
7(1)	Discrete I/O 2 (–)	Discrete I/O 2 (–)
8(1)	Discrete I/O 2 (+)	Discrete I/O 2 (+)
9	AC (Neutral)/L2	DC (–)

Table 4-7: Power and I/O terminals (field mount transmitter) *(continued)*

Terminal number	AC version	DC version
10	AC L1	DC (+)

(1) Only available with ordering code AX.

4.4.5 Power and I/O terminal blocks (wall mount)

Open the bottom cover of the transmitter to access the terminal block.

Figure 4-14: Terminal blocks (wall mount)

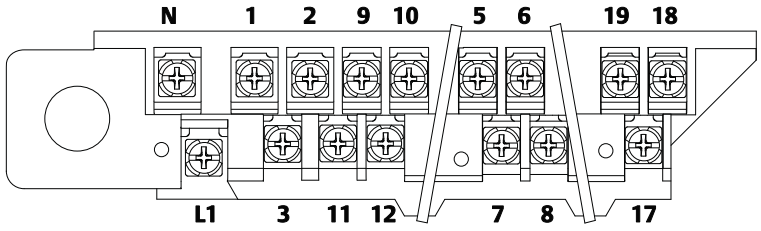

Table 4-8: Power and I/O terminals (wall mount transmitter)

Terminal number	AC version	DC version
1	Coil Positive	Coil Positive
2	Coil Negative	Coil Negative
3	Coil Shield	Coil Shield
5	+ Pulse	+ Pulse
6	– Pulse	– Pulse
7(1)	Analog HART	Analog HART
8(1)	Analog HART	Analog HART
9(2)	+ Discrete In/Out 2	+ Discrete In/Out 2
10(2)	– Discrete In/Out 2	– Discrete In/Out 2
11(2)	+ Discrete In/Out 1	+ Discrete In/Out 1
12(2)	– Discrete In/Out 1	– Discrete In/Out 1
17	Electrode Reference	Electrode Reference
18	Electrode Negative	Electrode Negative
19	Electrode Positive	Electrode Positive
N	AC (Neutral)/L2	DC (–)

Table 4-8: Power and I/O terminals (wall mount transmitter) *(continued)*

Terminal number	AC version	DC version
L1	AC L1	DC (+)

(1) Note Polarity: Internally Powered, Terminal 7 (–) Analog HART, Terminal 8 (+) Analog HART. Externally Powered, Terminal 7 (+) Analog HART, Terminal 8 (–) Analog HART

(2) Only available with ordering code AX.

4.4.6 Powering the transmitter

The transmitter is available in three models. The AC powered transmitter is designed to be powered by 90–250VAC (50/60Hz). The DC powered transmitter is designed to be powered by 12–42VDC. The low power transmitter is designed to be powered by 12–30VDC. Before connecting power to the transmitter, be sure to have the proper power supply, conduit, and other accessories. Wire the transmitter according to national, local, and plant electrical requirements for the supply voltage.

If installing in a hazardous location, verify that the meter has the appropriate hazardous area approval. Each meter has a hazardous area approval tag attached to the top of the transmitter housing.

AC power supply requirements

Units powered by 90 - 250VAC have the following power requirements. Peak inrush is 35.7A at 250VAC supply, lasting approximately 1ms. Inrush for other supply voltages can be estimated with: Inrush (Amps) = Supply (Volts) / 7.0

Figure 4-15: AC current requirements

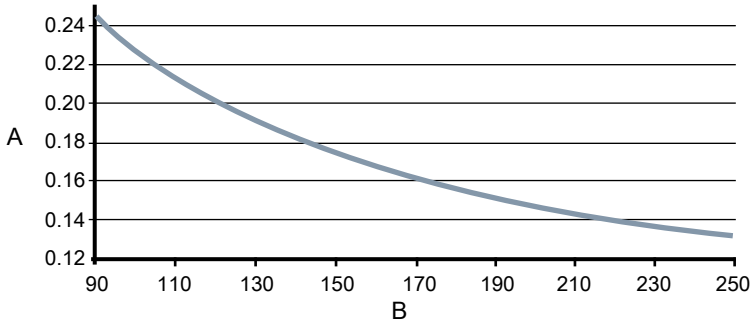

A. Supply current (amps)
B. Power supply (VAC)

Figure 4-16: Apparent power

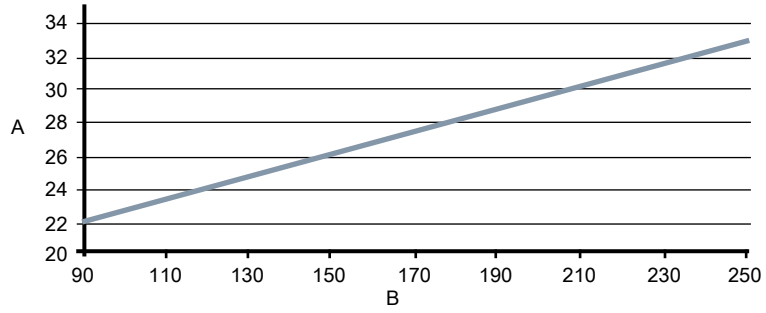

A. Apparent power (VA)
B. Power supply (VAC)

DC power supply requirements

Standard DC units powered by 12VDC power supply may draw up to 1.2A of current steady state. Low power DC units may draw up to 0.25A of current steady state. Peak inrush is 42A at 42VDC supply, lasting approximately 1ms. Inrush for other supply voltages can be estimated with: Inrush (Amps) = Supply (Volts) / 1.0

Figure 4-17: DC current requirements

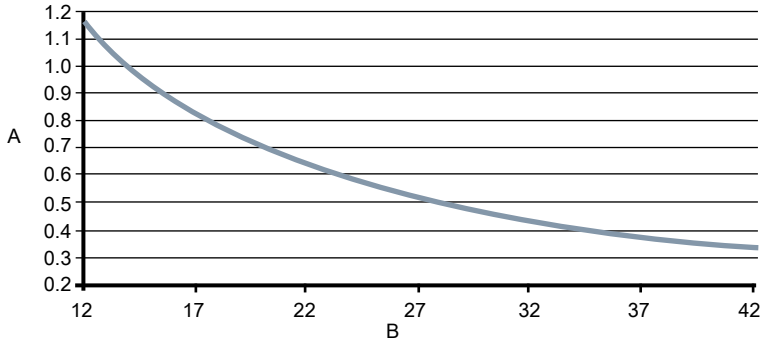

A. Supply current (amps)
B. Power supply (VDC)

Figure 4-18: Low power DC current requirements

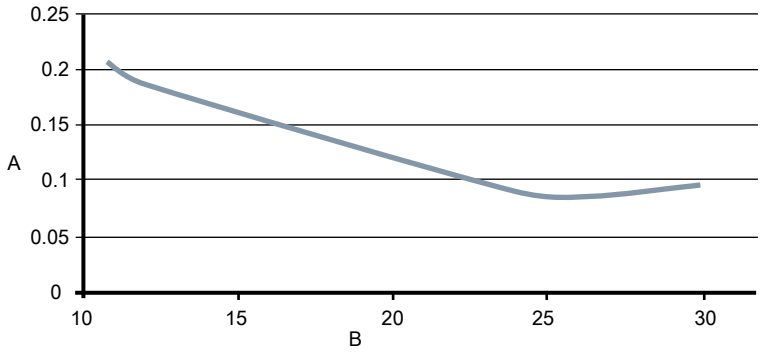

A. Supply current (amps)
B. Power supply (VDC)

Supply wire requirements

Use 10–18 AWG wire rated for the proper temperature of the application. For wire 10–14 AWG use lugs or other appropriate connectors. For connections in ambient temperatures above 122 °F (50 °C), use a wire rated for 194 °F (90 °C). For DC powered transmitters with extended cable lengths, verify that there is a minimum of 12VDC at the terminals of the transmitter with the device under load.

Electrical disconnect requirements

Connect the device through an external disconnect or circuit breaker per national and local electrical code.

Installation category

The installation category for the transmitter is OVERVOLTAGE CAT II.

Overcurrent protection

The transmitter requires overcurrent protection of the supply lines. Fuse rating and compatible fuses are shown in *Table 4-9*.

Table 4-9: Fuse requirements

Power system	Power supply	Fuse rating	Manufacturer
AC power	90–250VAC	2 Amp quick acting	Bussman AGC2 or equivalent
DC power	12–42VDC	3 Amp quick acting	Bussman AGC3 or equivalent
DC low power	12–30VDC	3 Amp quick acting	Bussman AGC3 or equivalent

Power terminals (field mount transmitter)

For AC powered transmitter (90–250VAC, 50/60 Hz):

- Connect AC Neutral to terminal 9 (AC N/L2) and AC Line to terminal 10 (AC/L1).

For DC powered transmitter:

- Connect negative to terminal 9 (DC -) and positive to terminal 10 (DC +).
- DC powered units may draw up to 1.2A.

Power terminals (wall mount transmitter)

For AC powered transmitter (90–250VAC, 50/60 Hz):

- Connect AC Neutral to Terminal N and AC Line to Terminal L1.

For DC powered transmitter:

- Connect negative to Terminal N and positive to Terminal L1.
- DC powered units may draw up to 1.2A.

Cover jam screw (field mount transmitter)

For flow meters shipped with a cover jam screw, the screw should be installed after the instrument has been wired and powered up. Follow these steps to install the cover jam screw:

1. Verify the cover jam screw is completely threaded into the housing.
2. Install the housing cover and verify the cover is tight against the housing.
3. Using a 2.5 mm hex wrench, loosen the jam screw until it contacts the transmitter cover.
4. Turn the jam screw an additional 1/2 turn counterclockwise to secure the cover.

Note
Application of excessive torque may strip the threads.

5. Verify the cover cannot be removed.

Covers (wall mount transmitter)

Use the transmitter lower door screw to secure the terminal compartment after the instrument has been wired and powered up. Follow these steps to ensure the housing is properly sealed to meet ingress protection requirements:

1. Ensure all wiring is complete and close the lower door.
2. Tighten the lower door screw until the lower door is tight against the housing. Metal to metal contact of the screw bosses is required to ensure a proper seal.

Note
Application of excessive torque may strip the threads or break the screw.

3. Verify the lower door is secure.

4.4.7 Analog output

The analog output signal is a 4-20mA current loop. Depending on the IS output option, the loop can be powered internally or externally via a hardware switch located on the front of the electronics stack. The switch is set to internal power when shipped from the factory. Intrinsically safe analog output requires a shielded twisted pair cable. For HART communication, a minimum resistance of 250 ohms is required. It is recommended to use individually shielded twisted pair cable. The minimum conductor size is 24 AWG (0.51mm) diameter for cable runs less than 5,000 feet (1,500m) and 20 AWG (0.81mm) diameter for longer distances.

Note

For more information about the analog output characteristics, see *Section A.2.3*.

Internal Power

Figure 4-19: Analog output wiring, internal power (field mount)

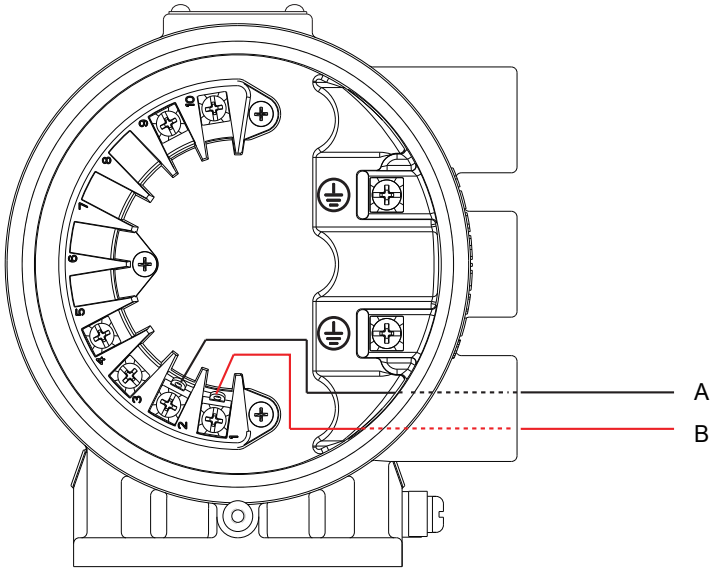

A. 4–20 mA (–) to Terminal #2
B. 4–20 mA (+) to Terminal #1

Note

Terminal polarity for the analog output is reversed between internally and externally powered.

Figure 4-20: Analog output wiring, internal power (wall mount)

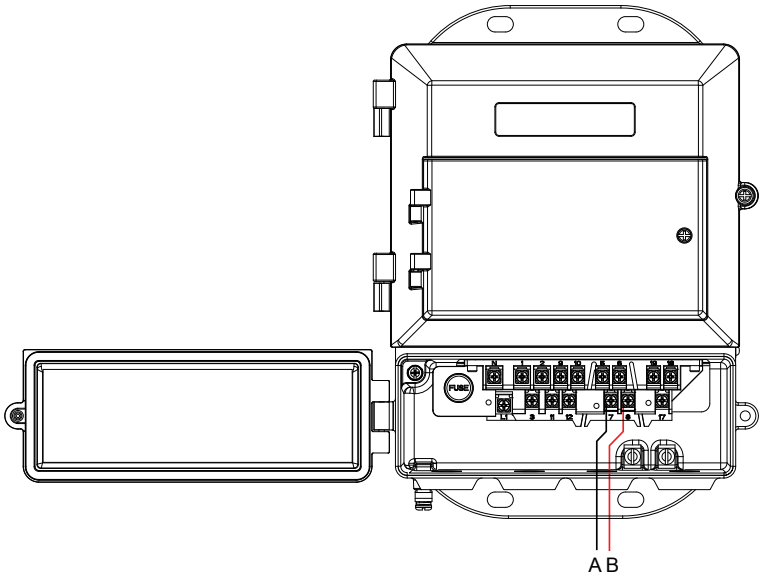

A. 4–20 mA (–) to Terminal #7
B. 4–20 mA (+) to Terminal #8

Note

Terminal polarity for the analog output is reversed between internally and externally powered.

External power

Figure 4-21: Analog output wiring, external power (field mount)

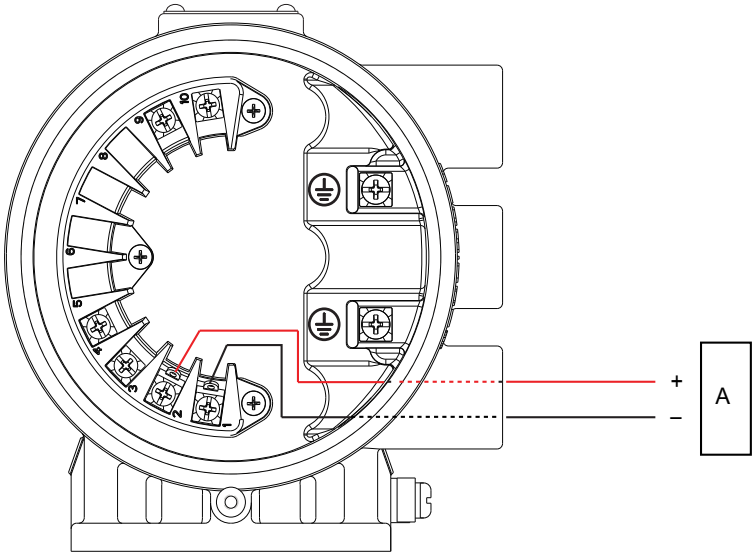

A. Power supply

- *(+) to Terminal #2*
- *(–) to Terminal #1*

Note

Terminal polarity for the analog output is reversed between internally and externally powered.

Figure 4-22: Analog output wiring, external power (wall mount)

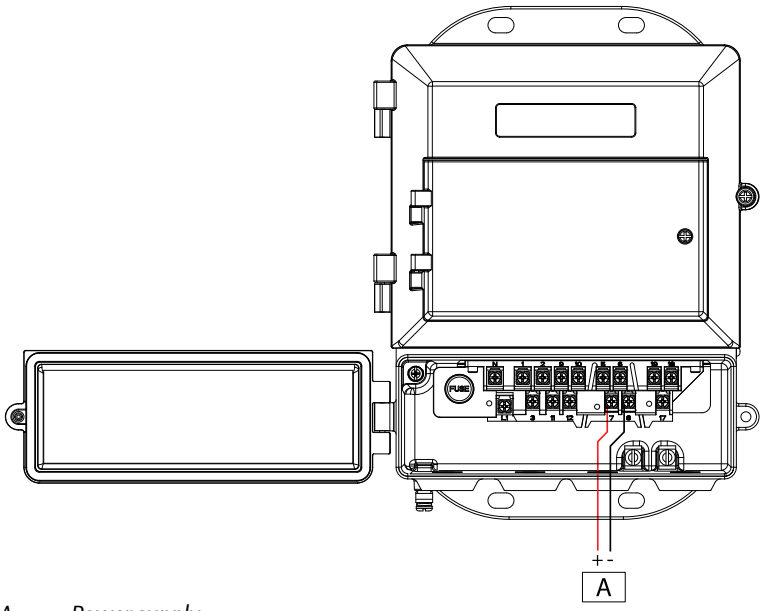

A. Power supply
- *(+) to Terminal #7*
- *(–) to Terminal #8*

Note

Terminal polarity for the analog output is reversed between internally and externally powered.

Figure 4-23: Analog loop load limitations

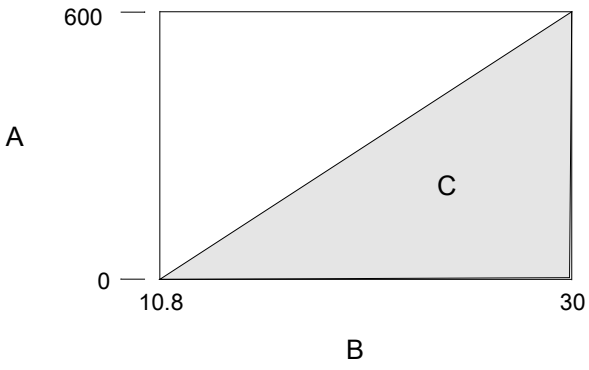

A. Load (ohms)
B. Power supply (volts)
C. Operating region
- $R_{max} = 31.25 (V_{ps}–10.8)$
- V_{ps} = power supply voltage (volts)
- R_{max} = maximum loop resistance (ohms)

5 Basic Configuration

Topics covered in this chapter:

- *Cover jam screw (field mount transmitter only)*
- *Basic Setup*
- *Local operator interface (LOI)*
- *Field Communicator interface*
- *Measurement units*

Once the magnetic flowmeter is installed and power has been supplied, the transmitter must be configured through the basic setup. These parameters can be configured through either an LOI or a HART communication device. Configuration settings are saved in nonvolatile memory within the transmitter.

5.1 Cover jam screw (field mount transmitter only)

For flow meters shipped with a cover jam screw, the screw should be installed after the instrument has been wired and powered up. Follow these steps to install the cover jam screw:

Procedure

1. Verify the cover jam screw is completely threaded into the housing.
2. Install the housing cover and verify the cover is tight against the housing.
3. Using a 2.5 mm hex wrench, loosen the jam screw until it contacts the transmitter cover.
4. Turn the jam screw an additional 1/2 turn counterclockwise to secure the cover.

Note
Application of excessive torque may strip the threads.

5. Verify the cover cannot be removed.

5.2 Basic Setup

Tag

Tag is the quickest and shortest way of identifying and distinguishing between transmitters. Transmitters can be tagged according to the requirements of your application. The tag may be up to eight characters long as standard, or 32 characters long when ordered with HART 7.

Flow units (PV)

The flow units variable specifies the format in which the flow rate will be displayed. Units should be selected to meet your particular metering needs. .

Line size

The line size (sensor size) must be set to match the actual sensor connected to the transmitter. The size must be specified in inches.

Upper range value (URV)

The URV sets the 20 mA point for the analog output. This value is typically set to full-scale flow. The units that appear will be the same as those selected under the flow units parameter. The URV may be set between –39.3 ft/s to 39.3 ft/s (–12 m/s to 12m/s). There must be at least 1 ft/s (0.3 m/s) span between the URV and LRV.

Lower range value (LRV)

The LRV sets the 4 mA point for the analog output. This value is typically set to zero flow. The units that appear will be the same as those selected under the flow units parameter. The LRV may be set between –39.3 ft/s to 39.3 ft/s (–12 m/s to 12m/s). There must be at least 1 ft/s (0.3 m/s) span between the URV and LRV.

Calibration number

The sensor calibration number is a 16-digit number generated at the factory during flow calibration, is unique to each sensor, and is located on the sensor tag.

5.3 Local operator interface (LOI)

Use the UP, DOWN, LEFT(E), and RIGHT arrows to navigate the menu structure.

When the display lock is activated, a lock symbol will appear in the lower right hand corner of the display. To deactivate the display lock, hold the UP arrow for three seconds and follow the on-screen instructions. Once deactivated, the lock symbol will no longer appear in the lower right hand corner of the display.

5.4 Field Communicator interface

Use the menu paths to configure basic setup of the transmitter using a field communicator.

Table 5-1: Basic setup menu paths

Function	Menu path
Basic Setup	**Configure** > **Manual Setup** > **Basic Setup**
Flow Units	**Configure** > **Manual Setup** > **Basic Setup** > **Flow Units**
PV Upper Range Value (URV)	**Configure** > **Manual Setup** > **Basic Setup** > **AO** > **URV**

Table 5-1: Basic setup menu paths *(continued)*

Function	Menu path
PV Lower Range Value (LRV)	**Configure > Manual Setup > Basic Setup > AO > LRV**
Calibration Number	**Configure > Manual Setup > Basic Setup > Setup > Calibration number**
Line Size	**Configure > Manual Setup > Basic Setup > Setup > Line Size**
Tag	**Configure > Manual Setup > Device Info > Identification > Tag**
Long Tag	**Configure > Manual Setup > Device Info > Identification > Long Tag**
Overview	**Overview**

5.5 Measurement units

Table 5-2: Volumetric flow units

gal/sec	gal/min	gal/hr	gal/day
L/sec	L/min	L/hr	L/day
ft3/sec	ft3/min	ft3/hr	ft3/day
	cm3/min		
m3/sec	m3/min	m3/hr	m3/day
Impgal/sec	Impgal/min	Impgal/hr	Impgal/day
B31/sec (1 barrel = 31 gallons)	B31/min (1 barrel = 31 gallons)	B31/hr (1 barrel = 31 gallons)	B31/day (1 barrel = 31 gallons)
B42/sec (1 barrel = 42 gallons)	B42/min (1 barrel = 42 gallons)	B42/hr (1 barrel = 42 gallons)	B42/day (1 barrel = 42 gallons)

Table 5-3: Mass flow units

lbs/sec	lbs/min	lbs/hr	lbs/day
kg/sec	kg/min	kg/hr	kg/day
	(s) tons/min	(s) tons/hr	(s) tons/day
	(m) tons/min	(m) tons/hr	(m) tons/day

Table 5-4: Velocity units

ft/sec	m/sec

6 Advanced installation details

Topics covered in this chapter:

- *Hardware switches*
- *Additional loops*

6.1 Hardware switches

The electronics are equipped with four user-selectable hardware switches. These switches set the Alarm Mode, Internal/External Analog Power, Transmitter Security, and Internal/ External Pulse Power.

Definitions of these switches and their functions are provided below. To change the settings, see below.

6.1.1 Alarm mode

If an event occurs that would trigger an alarm in the electronics, the analog output will be driven high or low, depending on the switch position. The switch is set in the HIGH position when shipped from the factory. Refer to *Table 8-1* and *Table 8-2* for analog output values of the alarm.

6.1.2 Transmitter security

The **SECURITY** switch allows the user to lock out any configuration changes attempted on the transmitter.

- When the security switch is in the **ON** position, the configuration can be viewed but no changes can be made.
- When the security switch is in the **OFF** position, the configuration can be viewed and changes can be made.

The switch is in the **OFF** position when the transmitter is shipped from the factory.

Note

The flow rate indication and totalizer functions remain active when the **SECURITY** switch is in either position.

6.1.3 Internal/external analog power

The 4–20 mA loop can be powered internally by the transmitter or externally by an external power supply. The **ANALOG** switch determines the source of the 4–20 mA loop power.

- When the switch is in the **INTERNAL** position, the 4–20 mA loop is powered internally by the transmitter.

- When the switch is in the **EXTERNAL** position, a 10-30 VDC external power supply is required. For more information about 4–20 mA external power, see *Section 4.4.7*.

The switch is in the **INTERNAL** position when the transmitter is shipped from the factory.

Note

External power is required for multidrop configurations.

6.1.4 Internal/external pulse power

The pulse loop can be powered internally by the transmitter or externally or by an external power supply. The **PULSE** switch determines the source of the pulse loop power.

- When the switch is in the **INTERNAL** position, the pulse loop is powered internally by the transmitter.
- When the switch is in the **EXTERNAL** position, a 5–28 VDC external supply is required. For more information about pulse external power, see *Section 6.2.1*.

The switch is in the **EXTERNAL** position when the transmitter is shipped from the factory.

6.1.5 Changing hardware switch settings (field mount)

Note

The hardware switches are located on the top side of the electronics board and changing their settings requires opening the electronics housing. If possible, carry out these procedures away from the plant environment in order to protect the electronics.

Figure 6-1: Electronics Stack and Hardware Switches

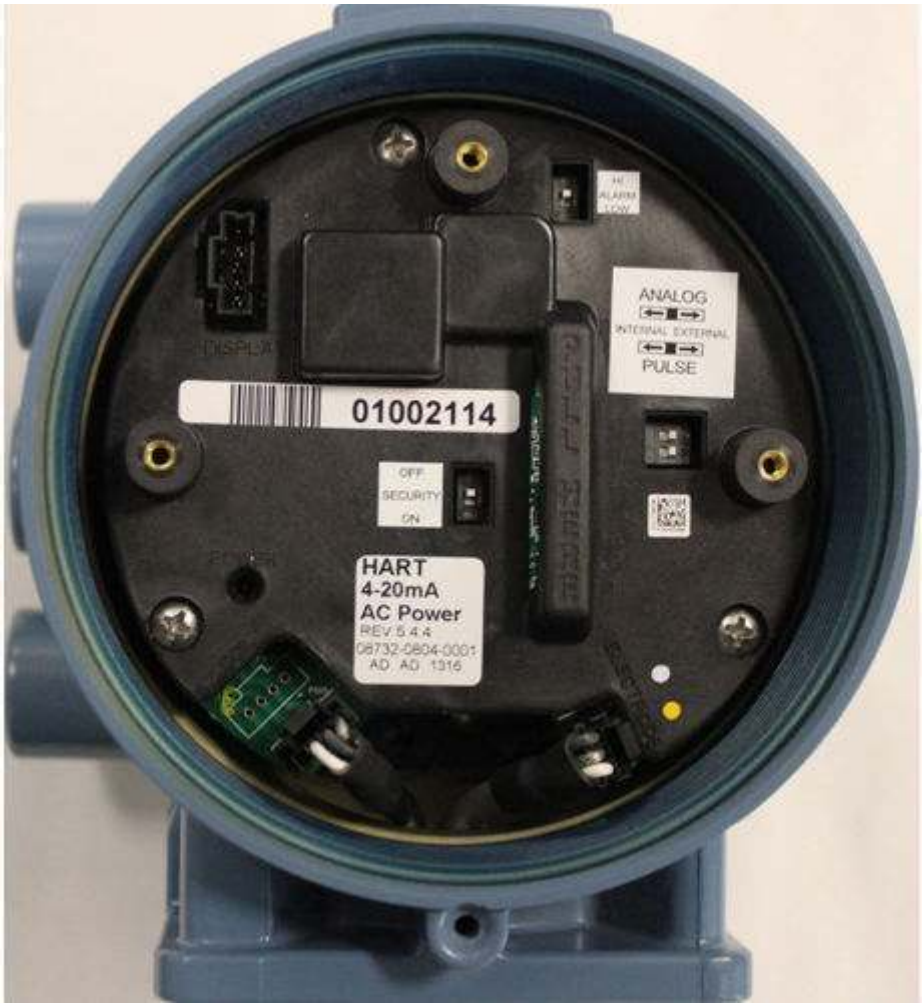

Procedure

1. Place the control loop into manual control.
2. Disconnect power to the transmitter
3. Remove the electronics compartment cover. If the cover has a cover jam screw, this must be loosened prior to removal of the cover.
4. Remove the LOI, if applicable.
5. Identify the location of each switch (see *Figure 6-1*).
6. Change the setting of the desired switches with a small, non-metallic tool.
7. Replace the LOI if applicable, and the electronics compartment cover. If the cover has a cover jam screw, this must be tightened to comply with installation requirements. See *Section 5.1* for details on the cover jam screw.
8. Return power to the transmitter and verify the flow measurement is correct.

9. Return the control loop to automatic control.

6.1.6 Changing hardware switch settings (wall mount)

Note

The hardware switches are located on the top side of the electronics board and changing their settings requires opening the electronics housing. If possible, carry out these procedures away from the plant environment in order to protect the electronics.

Figure 6-2: Electronics stack and hardware switches



Procedure

1. Place the control loop into manual control.
2. Disconnect power to the transmitter
3. Open the electronics compartment cover.
4. Identify the location of each switch (see *Figure 6-2*).
5. Change the setting of the desired switches with a small, non-metallic tool.
6. Close the electronics compartment cover. See *Section 4.4.6* for details on the covers.
7. Return power to the transmitter and verify the flow measurement is correct.
8. Return the control loop to automatic control.

6.2 Additional loops

There are three additional loop connections available on the Transmitter:

- Pulse output - used for external or remote totalization.
- Channel 1 can be configured as discrete input or discrete output.
- Channel 2 can be configured as discrete output only.

6.2.1 Connect pulse output

The pulse output function provides a galvanically isolated frequency signal that is proportional to the flow through the sensor. The signal is typically used in conjunction with an external totalizer or control system. The default position of the internal/external pulse power switch is in the EXTERNAL position. The user-selectable power switch is located on the electronics board.

External

For transmitters with the internal/external pulse power switch (output option code A) set in the EXTERNAL position or transmitters with intrinsically safe outputs (output option code B) the following requirements apply:

- Supply voltage: 5 to 28 VDC
- Maximum current: 100 mA
- Maximum power: 1.0 W
- Load resistance: 200 to 10k Ohms (typical value 1k Ohms). Refer to the figure indicated:

Output option code	Supply voltage	Resistance vs cable length
A	5-28 VDC	See *Figure 6-3*
B	5 VDC	See *Figure 6-4*
B	12 VDC	See *Figure 6-5*
B	24 VDC	See *Figure 6-6*

- Pulse mode: Fixed pulse width or 50% duty cycle
- Pulse duration: 0.1 to 650 ms (adjustable)
- Maximum pulse frequency:
  - Output option code A is 10,000 Hz
  - Output option code B is 5000 Hz
- FET switch closure: solid state switch

Figure 6-3: Output Option Code A—Maximum Frequency vs. Cable Length

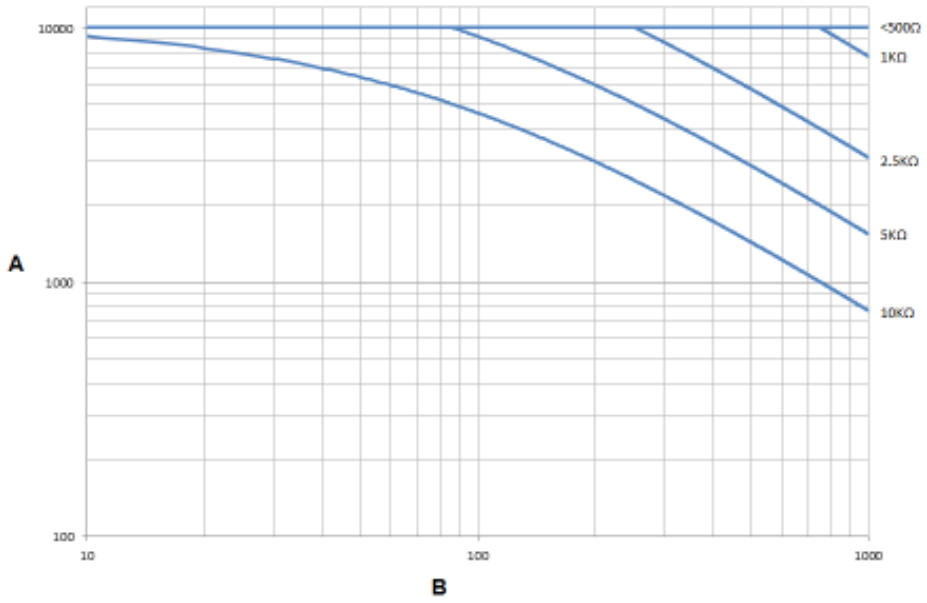

A. Frequency (Hz)
B. Cable length (feet)

Figure 6-4: Output Option Code B—VDC Supply

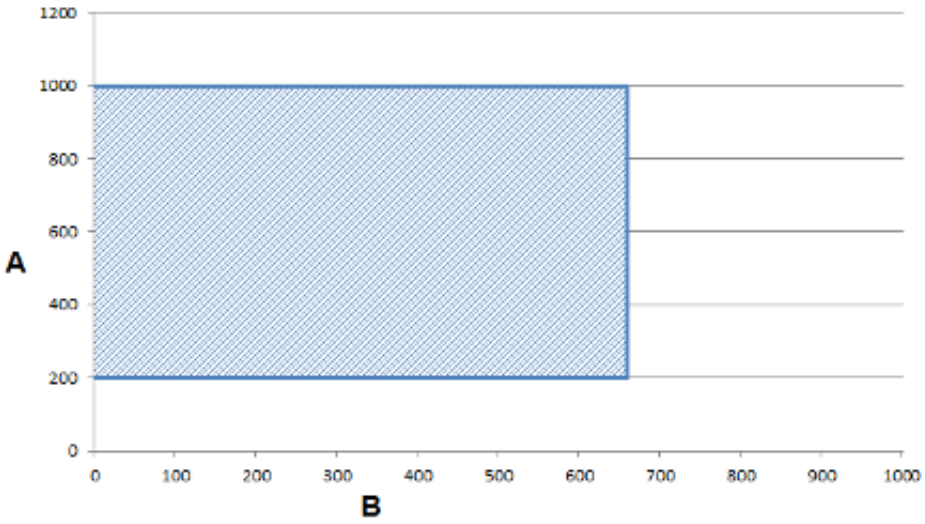

A. Resistance (Ω)

B. Cable length (feet)

At 5000 Hz operation with a 5 VDC supply, pull-up resistances of 200 to 1000 Ohms allow cable lengths up to 660 ft (200 m).

Figure 6-5: Output Option Code B—2 VDC Supply

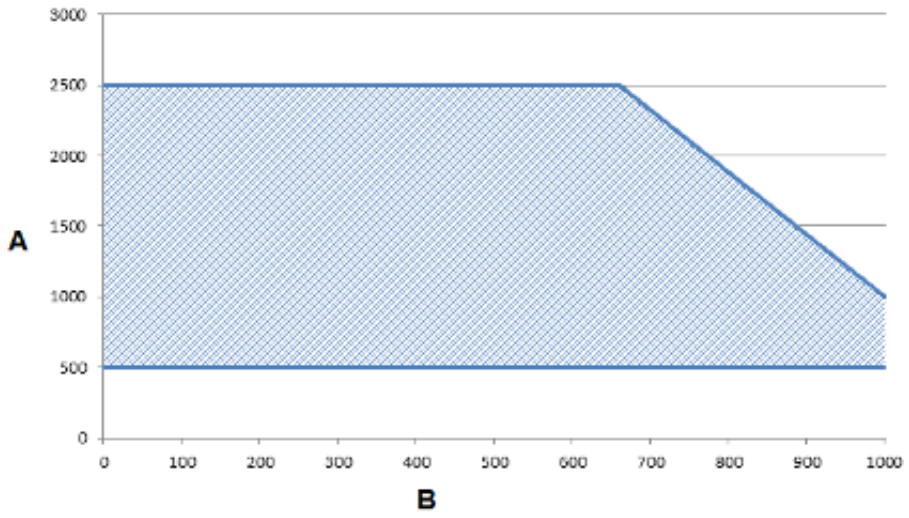

A. Resistance (Ω)

B. Cable length (feet)

At 5000 Hz operation with a 12 VDC supply, pull-up resistances of 500 to 2500 Ohms allow cable lengths up to 660 ft (200 m). Resistances from 500 to 1000 Ohms allow a cable length of 1000 ft (330 m).

Figure 6-6: Output Option Code B—24 VDC Supply

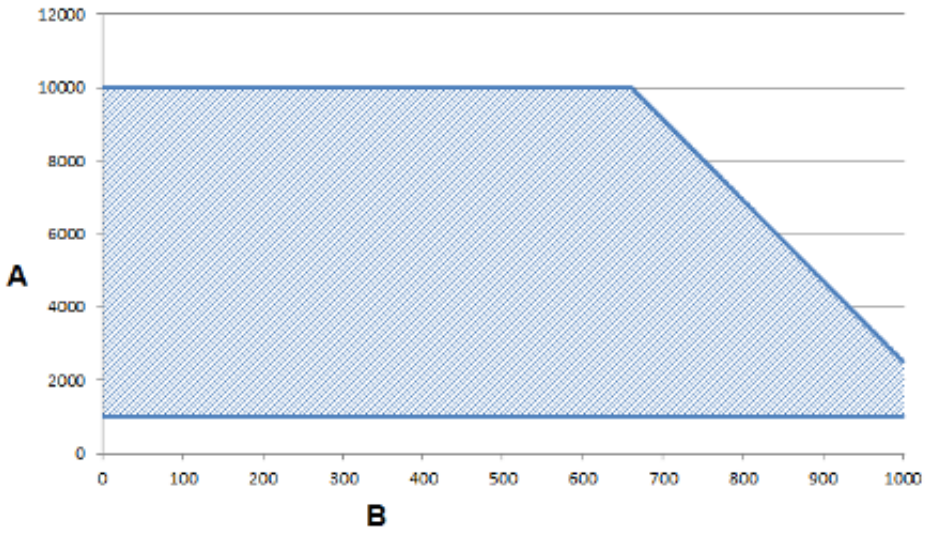

A. Resistance (Ω)

B. Cable length (feet)

At 5000 Hz operation with a 24 VDC supply, pull-up resistances of 1000 to 10,000 Ohms allow cable lengths up to 660 ft (200 m). Resistances from 1000 to 2500 Ohms allow a cable length of 1000 ft (330 m).

Connecting an external power supply

Figure 6-7: Connecting an electromechanical totalizer/counter with external power supply (field mount)

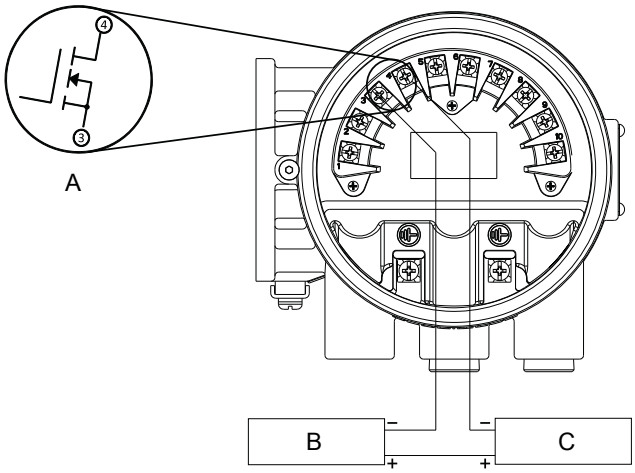

A. Schematic showing FET between terminal 3 and 4
B. 5–24 VDC power supply
C. Electro-mechanical counter

Figure 6-8: Connecting an electromechanical totalizer/counter with external power supply (wall mount)

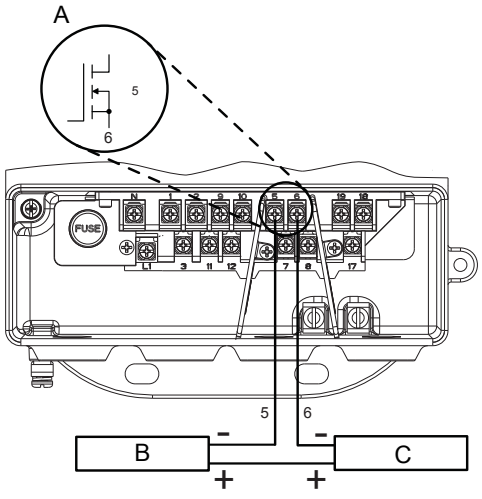

A. Schematic showing FET between terminal 5 and 6
B. Electro-mechanical counter
C. 5–24 VDC power supply

Note

Total loop impedance must be sufficient to keep loop current below maximum rating. A resistor can be added in the loop to raise impedance.

Figure 6-9: Connecting to an electronic totalizer/counter with external power supply (field mount)

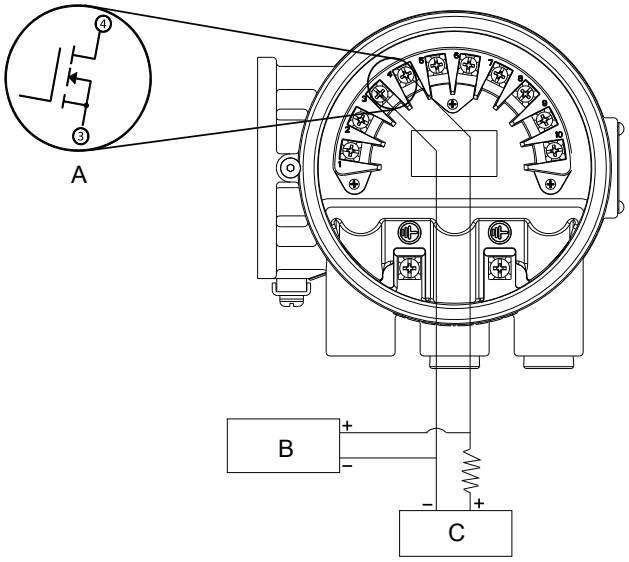

A. Schematic showing FET between terminal 3 and 4
B. Electronic counter
C. 5–24 VDC power supply

Figure 6-10: Connecting to an electronic totalizer/counter with external power supply (wall mount)

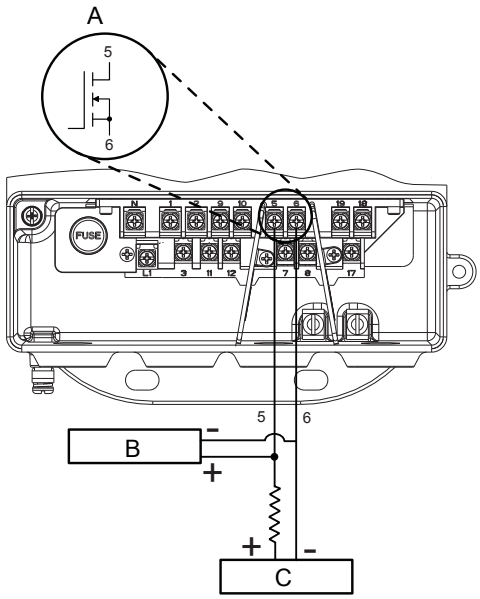

A. Schematic showing FET between terminal 5 and 6
B. Electronic counter
C. 5–24 VDC power supply

Note

Total loop impedance must be sufficient to keep loop current below maximum rating.

Procedure

1. Ensure the power source and connecting cable meet the requirements outlined previously.
2. Turn off the transmitter and pulse output power sources.
3. Run the power cable to the transmitter.

Internal

When the pulse switch is set to internal, the pulse loop will be powered from the transmitter. Supply voltage from the transmitter can be up to 12 VDC. Connect the transmitter directly to the counter as shown. Internal pulse power can only be used with an electronic totalizer or counter and cannot be used with an electromechanical counter.

Figure 6-11: Connecting to an electronic totalizer/counter with internal power supply (field mount)

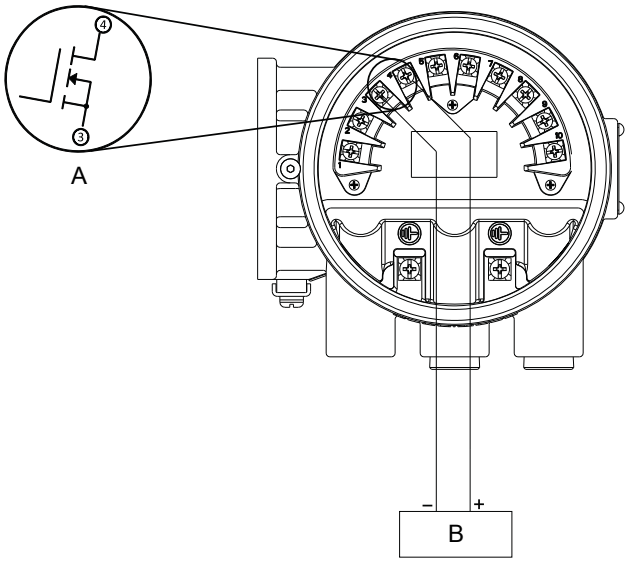

A. Schematic showing FET between terminal 3 and 4
B. Electronic counter

Figure 6-12: Connecting to an electronic totalizer/counter with internal power supply (wall mount)

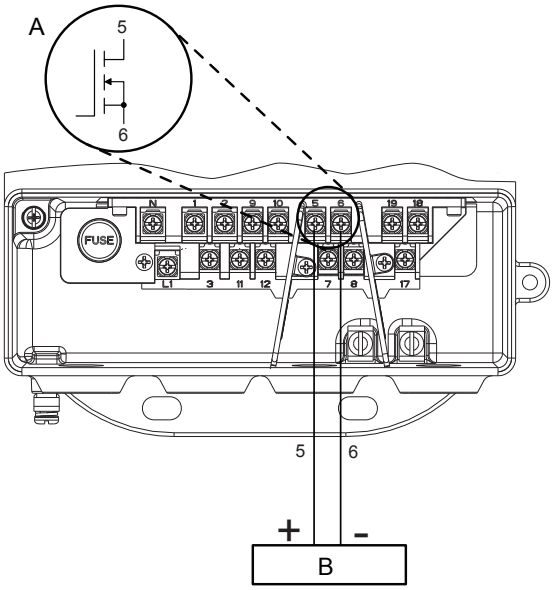

A. Schematic showing FET between terminal 5 and 6
B. Electronic counter

Procedure

1. Turn off the transmitter.
2. Connect wires from the counter to the transmitter as shown.

6.2.2 Connect discrete output

The discrete output control function can be configured to drive an external signal to indicate zero flow, reverse flow, empty pipe, diagnostic status, flow limit, or transmitter status. The following requirements apply:

- Supply Voltage: 5 to 28 VDC
- Maximum Voltage: 28 VDC at 240 mA
- Switch Closure: solid state relay

Figure 6-13: Connect discrete output to relay or control system input (field mount)

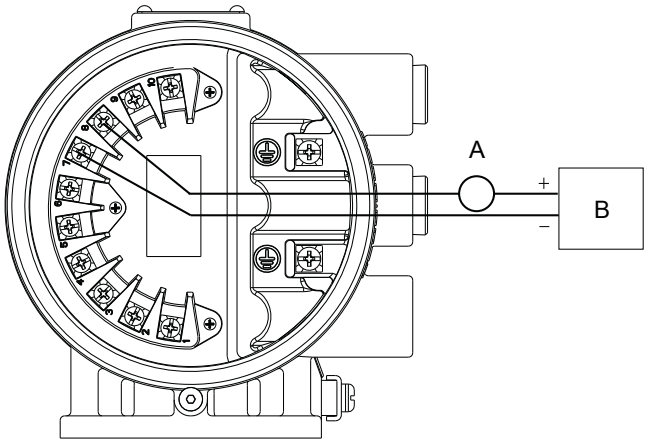

A. Control relay or input
B. 5–28 VDC power supply

Figure 6-14: Connect discrete output to relay or control system input (wall mount)

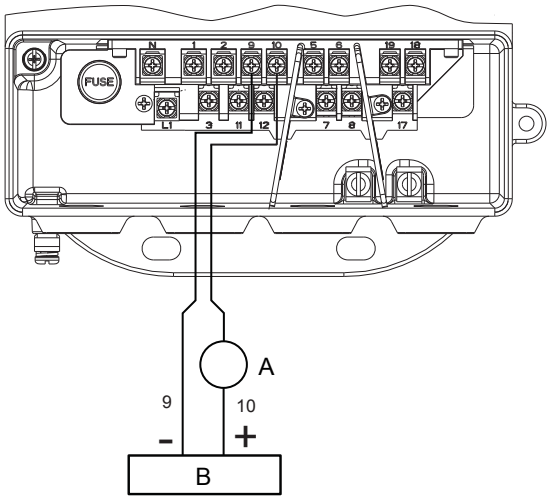

A. Control relay or input
B. 5–28 VDC power supply

Note

Total loop impedance must be sufficient to keep loop current below maximum rating. A resistor can be added in the loop to raise impedance.

For discrete output control, connect the power source and control relay to the transmitter. To connect external power for discrete output control, complete the following steps:

Procedure

1. Ensure the power source and connecting cable meet the requirements outlined previously.
2. Turn off the transmitter and discrete power sources.
3. Run the power cable to the transmitter.
4. Connect the DC power supply to the transmitter as shown.

6.2.3 Connect discrete input

The following requirements apply:

Supply Voltage	5 to 28 VDCControl
Current	1.5 - 20mA
Input Impedance	2.5 k plus 1.2V Diode drop. See *Figure 6-17*.

Figure 6-15: Connecting Discrete Input (field mount)

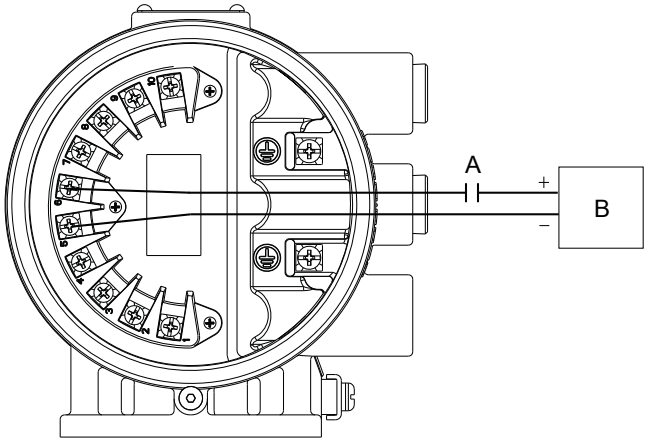

A. Relay contactor control system output
B. 5–28 VDC power supply

Figure 6-16: Connecting Discrete Input (wall mount)

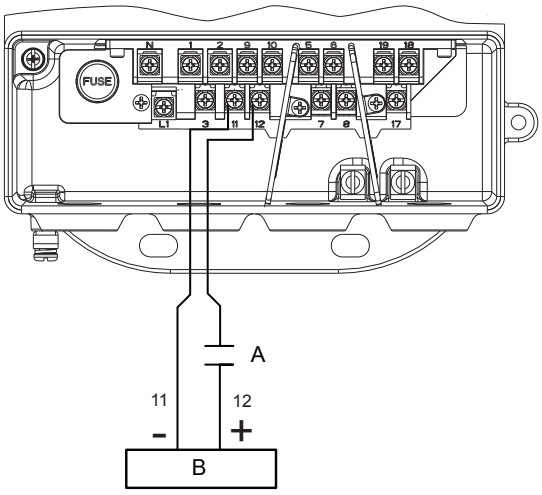

A. Relay contactor control system output
B. 5–28 VDC power supply

Figure 6-17: Discrete Input Operating Range

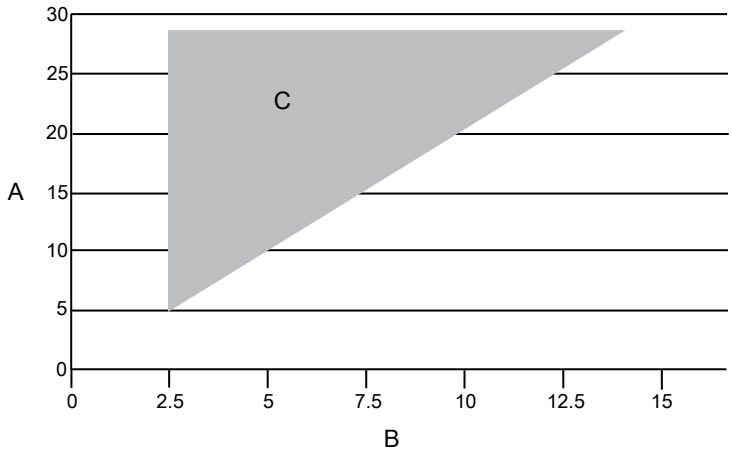

A. Supply voltage
B. series resistance $\Omega_{in} + \Omega_{ext}$ (KΩ)

To connect the discrete input, complete the following steps.

Procedure

1. Ensure the power source and connecting cable meet the requirements outlined previously.
2. Turn off the transmitter and discrete power sources.
3. Run the power cable to the transmitter.
4. Connect the wires to the transmitter as shown.

7 Operation

Topics covered in this chapter:

- *Introduction*
- *Local operator interface (LOI)*
- *Field Communicator interface*

7.1 Introduction

The transmitter features a full range of software functions, transmitter configurations, and diagnostic settings. These features can be accessed through the Local Operator Interface (LOI), a handheld Field Communicator, AMS® Device Manager, ProLink III software, or a host control system. Configuration variables may be changed at any time; specific instructions are provided through on-screen instructions.

This section covers the basic features of the LOI (optional) and provides general instructions on how to navigate the configuration menus using the buttons. The section also covers the use of a Field Communicator and provides menu trees to access each function. For detailed LOI configuration refer to *Chapter 8*.

7.2 Local operator interface (LOI)

The optional LOI provides a communications center for the transmitter.

The LOI allows an operator to:

- Change transmitter configuration
- View flow and totalizer values
- Start/stop and reset totalizer values
- Run diagnostics and view the results
- Monitor transmitter status

7.2.1 Basic features (field mount)

The basic features of the LOI include a display window and four navigational arrow keys.

Figure 7-1: Local Operator Interface Keypad and Character Display

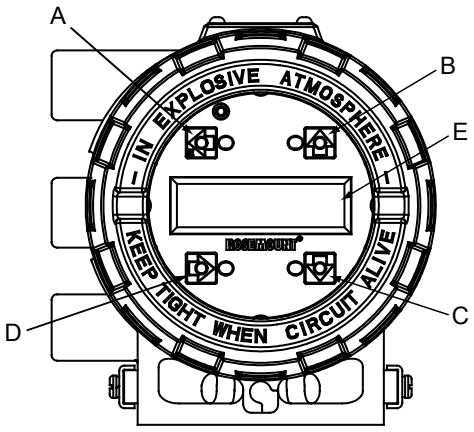

A. ***LEFT*** *(E) key*
B. ***UP*** *key*
C. ***DOWN*** *key*
D. ***RIGHT*** *key*
E. Display window

To access the LOI, press the DOWN arrow one time. Use the UP, DOWN, LEFT, and RIGHT arrows to navigate the menu structure. A map of the LOI menu structure is shown in .

7.2.2 Basic features (wall mount)

The basic features of the LOI include totalizer control, diagnostics, basic config, and menu navigation. These features provide control of all transmitter functions.

Figure 7-2: Local Operator Interface and Character Display

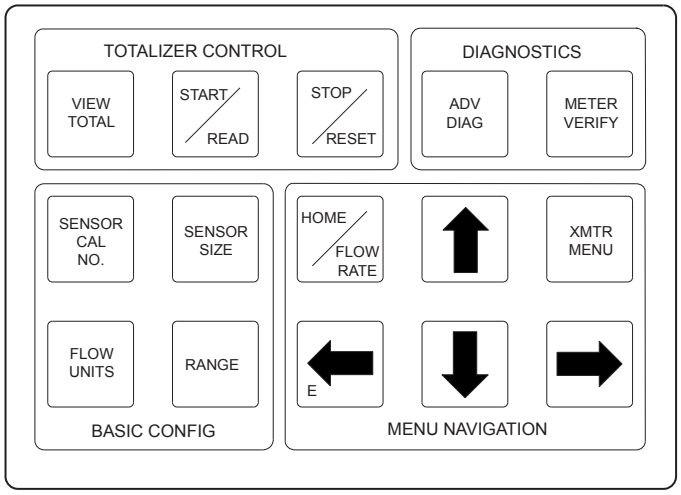

Totalizer Control

The totalizer control buttons enable you to view, start, stop, read, and reset the totalizer.

VIEW TOTAL —**VIEW TOTAL**. Scroll through the totalizer values in aphabetical order (Totalizer A, Totalizer B, Totalizer C).

START/READ —**START/READ**. This functionality applies to the currently displayed totalizer value.

- If the totalizers are not running, pressing this button starts ALL totalizers counting.
- If the totalizers are running, pressing this button pauses the display, enabling the user to read the total value. It does NOT stop the totalizer value from accumulating in the background. Pressing the button while the display is paused returns the display to the accumulating totalizer value

STOP/RESET —**STOP/RESET**. This functionality applies to the currently displayed totalizer value.

- If the totalizers are running, pressing this button stops ALL totalizers from accumulating.
- If the totalizer is stopped, pressing this button resets the total value to a value of zero.

Note

If you attempt to reset the totalizer from the LOI when it is configured as non-resetable from the LOI, a notification appears.

Diagnostics

The diagnostics buttons provide direct access to the advanced diagnostic functions of the transmitter and meter verification.

ADV DIAG —**ADV DIAG**. Access the advanced diagnostic menu.

METER VERIFY —**METER VERIFY**. Run Meter Verification.

Basic Config

The basic config buttons provide direct access to the most common transmitter parameters.

SENSOR CAL NO. —**SENSOR CAL NO**. Access the sensor calibration number parameter. Press ⬆, ⬇, and ➡ to modify the sensor calibration number. Press ⬅ to store the new value as the sensor calibration number.

SENSOR SIZE —**SENSOR SIZE**. Access the Line Size parameter. Press ⬆ or ⬇ to select the sensor line size. Press ➡ to increment the line size. Press ⬅ to store the new value as the sensor line size.

FLOW UNITS —**FLOW UNITS**. Access the Flow Units parameter. Press ⬆ or ⬇ to select the flow units. Press ➡ to increment the flow units. Press ⬅ will store the selection.

RANGE —**RANGE**. Access the PV URV parameter. Press ⬆, ⬇, and ➡ to modify the upper range value. Press ⬅ to store the new value as the PV Upper Range Value.

Menu Navigation

The menu navigation buttons enable you to move the display cursor, incrementally increase the value, enter the selected value, display the home screen, or access the transmitter menu.

HOME / FLOW RATE —**HOME/FLOW RATE**. Access the flow rate display screen.

XMTR MENU —**XMTR MENU**. Access the transmitter menu structure.

⬆ —(Up). Increment a numerical or list value.

⬅ E —(Left) or **E**. Back out or enter/store parameters to the transmitter memory.

⬇ —(Down). Decrement a numerical or list value.

➡ —(Right). Highlight a numerical or text character, or increment a list value.

Press XMTR MENU to access the menu. Use ⬆, ⬇, ⬅, and ➡ to navigate the menu structure. A map of the LOI menu structure is shown in *Section 7.2.12*.

7.2.3 Data entry

The LOI keypad does not have alphanumeric keys. Alphanumeric and symbolic data is entered by the following procedure. Use the steps below to access the appropriate functions.

Procedure

1. Use ⬆, ⬇, ⬅, and ➡ to navigate the menu () and access the appropriate alphanumeric parameter.
2. Use ⬆, ⬇ or ➡ to begin editing the parameter.
   - Press ⬅ to go back without changing the value.
   - For numerical data, scroll through the digits 0-9, decimal point, and dash.
   - For alphabetical data, scroll through the letters of the alphabet A-Z, digits 0-9, and the symbols ?, &, +, -, *, /, $, @,%, and the blank space.
3. Use ➡ to highlight each character you want to change and then use ⬆ and ⬇ to select the value.

   If you go past a character that you wish to change, keep using ➡ to wrap around and arrive at the character you want to change.
4. Press ⬅ when all changes are complete to save the entered values.
5. Press ⬅ again to navigate back to the menu tree.

7.2.4 Data entry examples

Parameter values are classified as *table values* or *select values*.

- Table values are available from a predefined list for parameters such as line size or flow units.
- Select values are integers, floating point numbers, or character strings and are entered one character at a time using the arrow keys for parameters such as PV URV and calibration number.

Table value example

Setting the sensor size:

Procedure

1.
   - For field mount transmitters, press ⬇ key to access the menu. See *Section 7.2.12*.
   - For wall mount transmitters, press XMTR MENU to access the menu. See *Section 7.2.12*.
2. Use ⬆, ⬇, ⬅, and ➡ to select line size from the basic setup menu.

3. Use ⬆ or ⬇ to increase/decrease the sensor size.
4. When you reach the desired sensor size, press ➡.
5. Set the loop to manual if necessary, and press ➡ again.

After a moment, the LOI will display `VALUE STORED SUCCESSFULLY` and then display the selected value.

Select value example

Changing the upper range limit:

Procedure

1.
   - For field mount transmitters, press ⬇ key to access the menu. See *Section 7.2.12*.
   - For wall mount transmitters, press **XMTR MENU** to access the menu. See *Section 7.2.12*.
2. Use ⬆, ⬇, ⬅, and ➡ to select **PV URV** from the basic setup menu.
3. Press ➡ to position the cursor.
4. Press ⬆ or ⬇ to set the number.
5. Repeat steps 3and 4 until desired number is displayed, press ➡.
6. Set the loop to manual if necessary, and press ➡ again.

After a moment, the LOI will display `VALUE STORED SUCCESSFULLY` and then display the selected value.

7.2.5 Dynamic variable display pause

To make dynamically changing variables easier to read and record, a pause feature has been built into the LOI.

When viewing a dynamic variable (such as a totalizer value) from the view variable screen, press ➡ to pause the display value. To return the screen to the dynamic display mode, press ➡ again, or exit the screen by pressing ⬅.

Note

It is important to note this feature pauses only the display. While the display is paused, the transmitter continues to measure all variables dynamically, and continues to increment the totalizer.

7.2.6 Totalizer functionality

Totalizer selection

- To view the totalizer values, press ⬇ to access the LOI menu structure.
- To view the totalizer values, press **VIEW TOTAL** to access the LOI menu structure.

The first option is the totalizers. Under this section, you can view and configure the totalizers. See *Section 8.2.3* for more information on the totalizer functionality.

Start all / Stop all

Totalizers can be started or stopped simultaneously. See *Section 8.2.3*.

Reset totalizer

The totalizers can be configured to be reset through the LOI. They can be reset individually, or simultaneously through a global command. For details on configuring the reset functionality and on resetting the totalizers, refer to *Section 8.2.3*.

7.2.7 Display lock

The transmitter has display lock functionality to prevent unintentional configuration changes. The display can be locked manually or configured to automatically lock after a set period of time. When locked, the LOI will display the flow screen.

Manual display lock

To activate, hold the UP arrow for 3 seconds and follow the on-screen instructions. When the display lock is activated, a lock symbol will appear in the lower right hand corner of the display. To deactivate, hold the UP arrow for 3 seconds and follow the on-screen instructions. When the display lock is deactivated, the lock symbol will no longer appear in the lower right hand corner of the display.

Auto display lock

The transmitter can be configured to automatically lock the LOI. Follow the instructions below to access configuration.

Procedure

1.
   - For field mount transmitters, Press ⬇ to access the menu. See *Section 7.2.12*.
   - For wall mount transmitters, Press **XMTR MENU** to access the menu. See *Section 7.2.12*.
2. Scroll to and select **LOI Config** from the Detailed Setup menu.
3. Press ⬇ to highlight **Disp Auto Lock** and press ➡ to enter the menu.
4. Press ⬆ or ⬇ to select the auto lock time.
5. When you reach the desired time, press ➡.
6. Set the loop to manual if necessary, and press ➡.

After a moment, the LOI will display `VALUE STORED SUCCESSFULLY` and then display the selected value.

7.2.8 Security

The transmitter uses two types of protection to prevent users from making changes to the transmitter configuration. Only one security setting is needed to be ON to prevent changes, both security settings need to be OFF to allow changes.

Write protect

Read-only informational variable that reflects the setting of the hardware security switch. If Write Protect is ON, configuration data are protected and cannot be changed from the LOI , a HART-based communicator or control system. If Write Protect is OFF, configuration data may be changed.

HART Lock (HART 7 only)

Read-only informational variable that reflects the setting of the software security. If HART Lock is ON, configuration data are protected and cannot be changed from the LOI or a HART-based communicator or control system. If HART Lock is OFF, configuration data may be changed.

7.2.9 Locate device

For HART 7 devices with LCD displays, enabling Locate Device displays the characters "0-0-0-0-0-0-0-0-" on the LCD display. This allows for easy field identification of the device during commissioning or service.

7.2.10 Diagnostic messages

Diagnostic messages may appear on the LOI. See *Chapter 9* for a complete list of messages, potential causes, and corrective actions for these messages.

7.2.11 Display symbols

When certain transmitter functions are active, a symbol will appear in the lower-right corner of the display. The possible symbols include the following:

Display Lock	
Totalizer	
Reverse flow	R
Continuous meter verification	

7.2.12 LOI Menu trees

Figure 7-3: LOI menu tree for HART rev 5.5 and HART rev 7.1, part 1

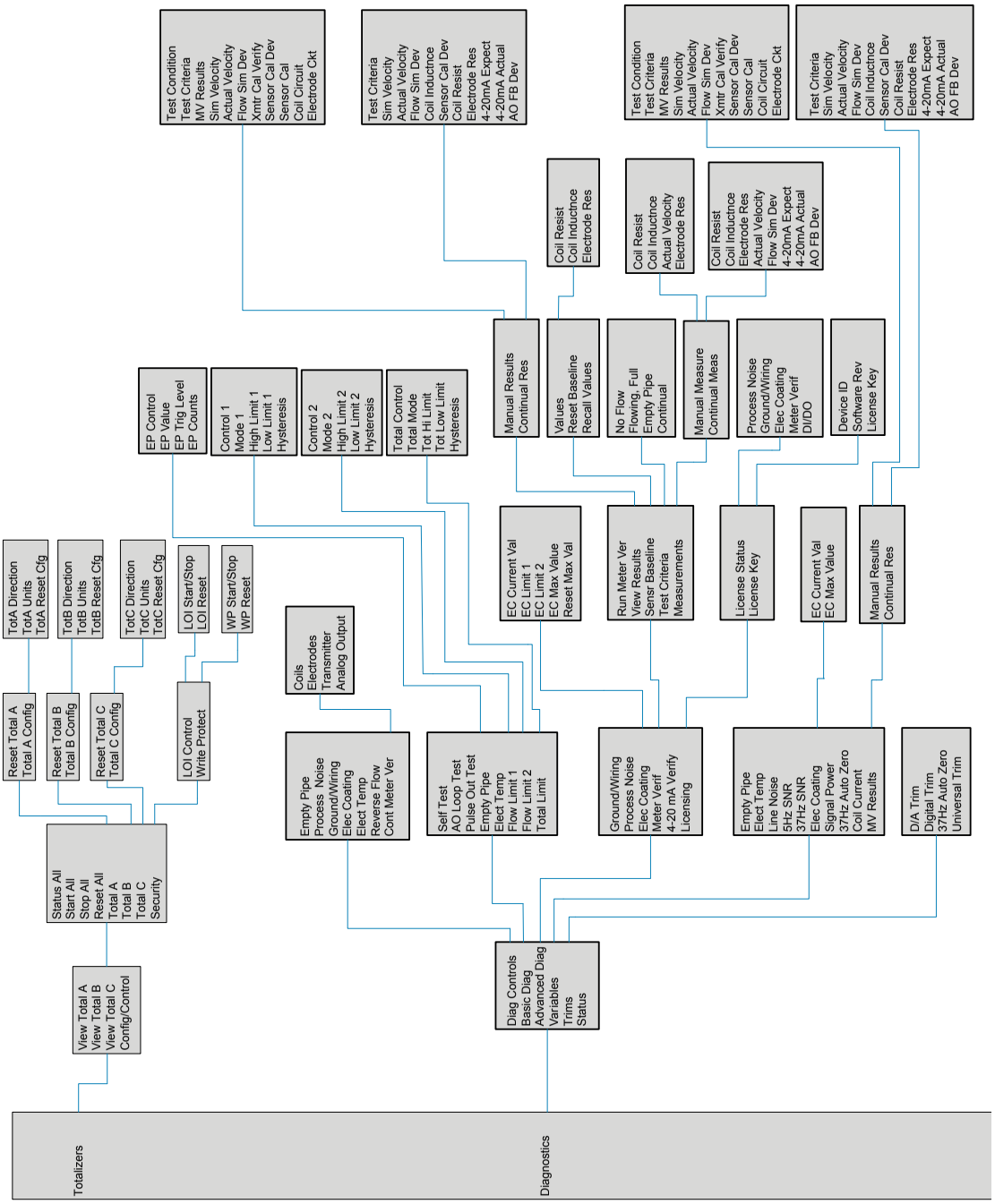

Figure 7-4: LOI menu tree for HART rev 5.5 and HART rev 7.1, part 2

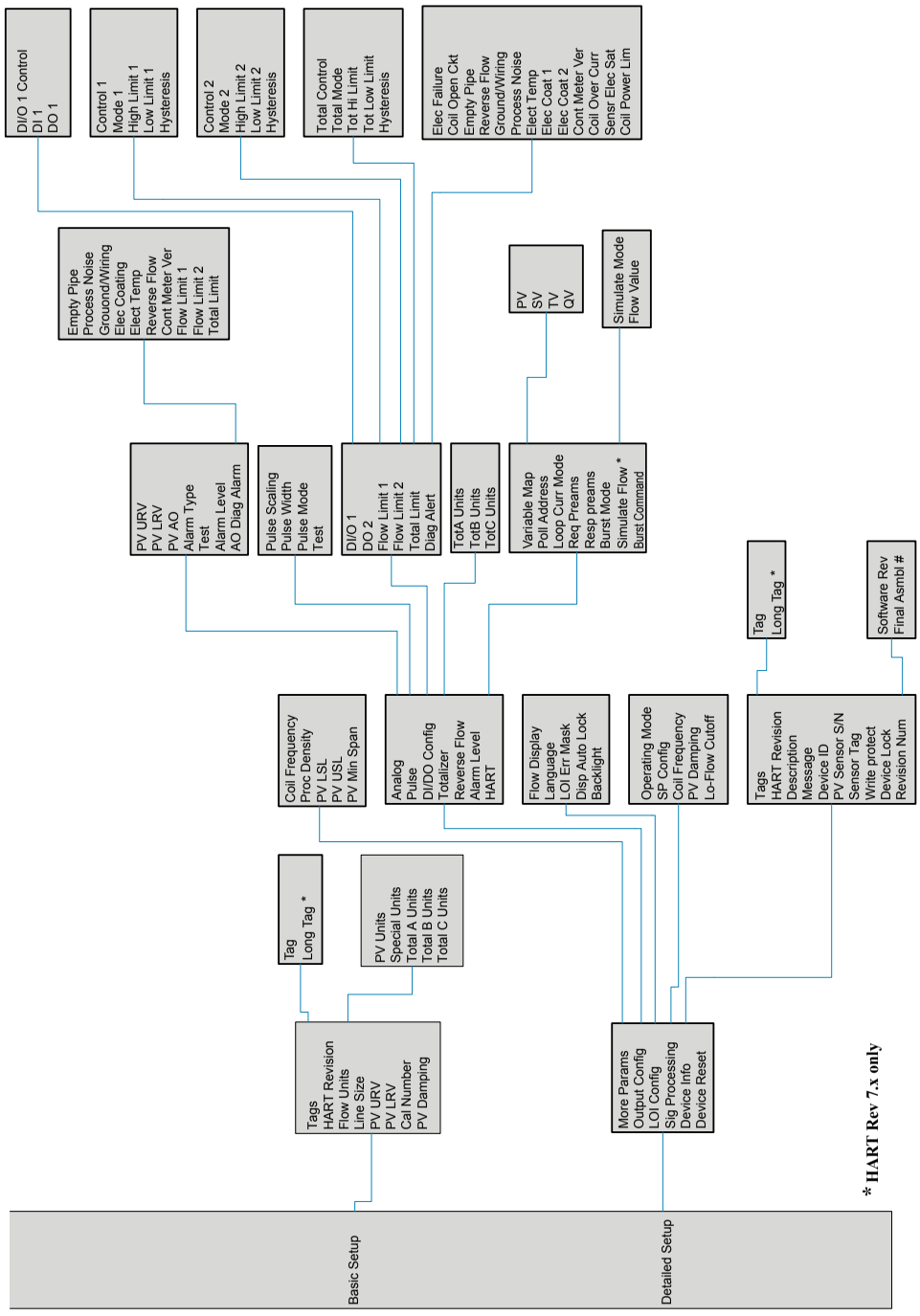

7.3 Field Communicator interface

The transmitter can be configured with a Field Communicator using HART® Protocol gaining access to the software functions, transmitter configurations, and diagnostic settings. Refer to the Field Communicator Manual for detailed instructions on how to connect to the device.

7.3.1 Field Communicator user interface

The device driver uses conditional formatting menus. If the diagnostic is not active, the diagnostic will not be displayed as a menu item in the Field Communicator, and menu trees will be resequenced accordingly.

The device dashboard interface is shown in *Figure 7-5*. The corresponding menu trees are shown in *Section 7.3.2* .

Figure 7-5: Device Dashboard Interface



7.3.2 Field Communicator menu trees

Figure 7-6: Field Communicator Dashboard Menu Tree (HART v5.5, part 1)

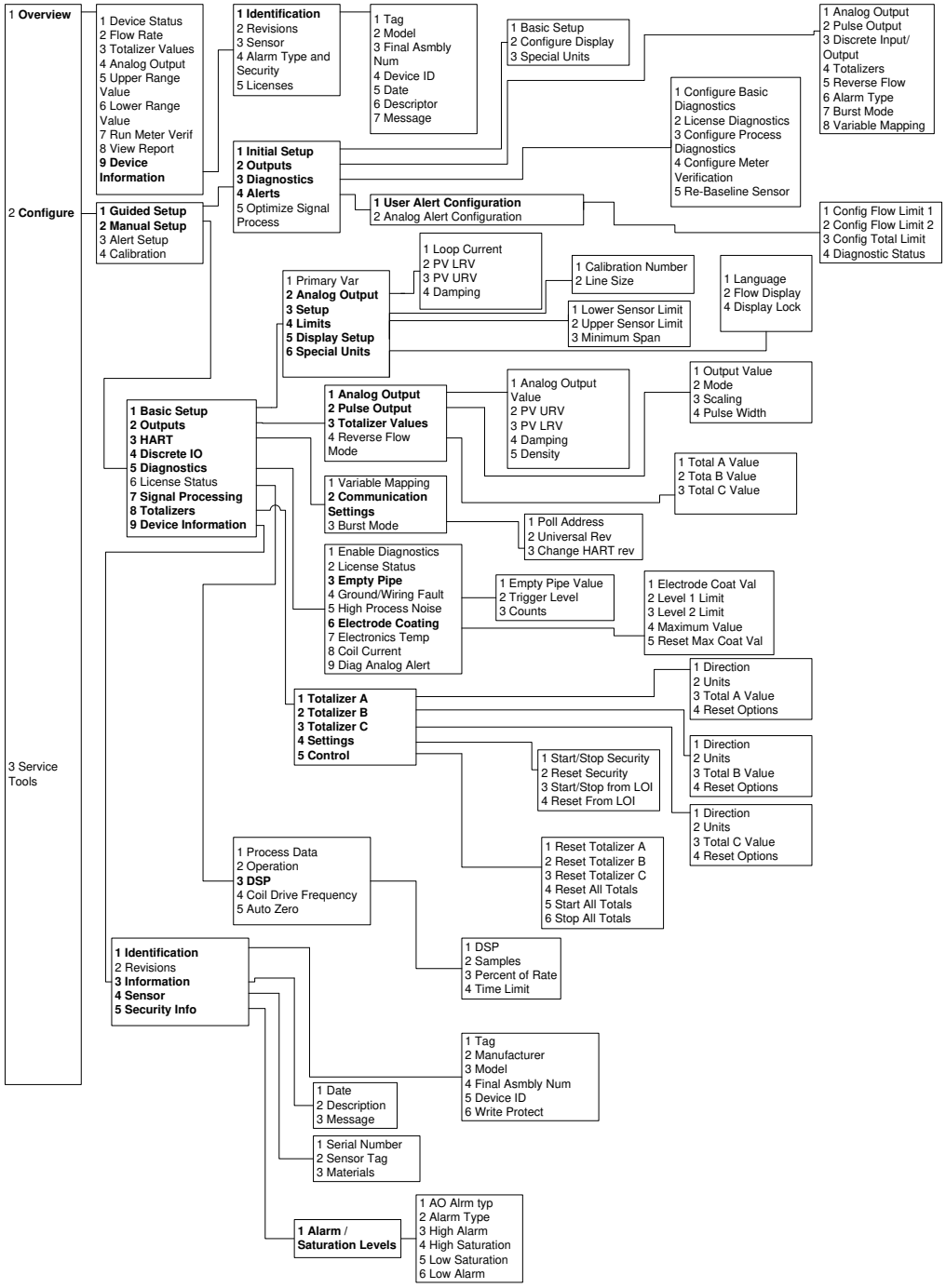

Figure 7-7: Field Communicator Dashboard Menu Tree (HART v5.5, part 2)

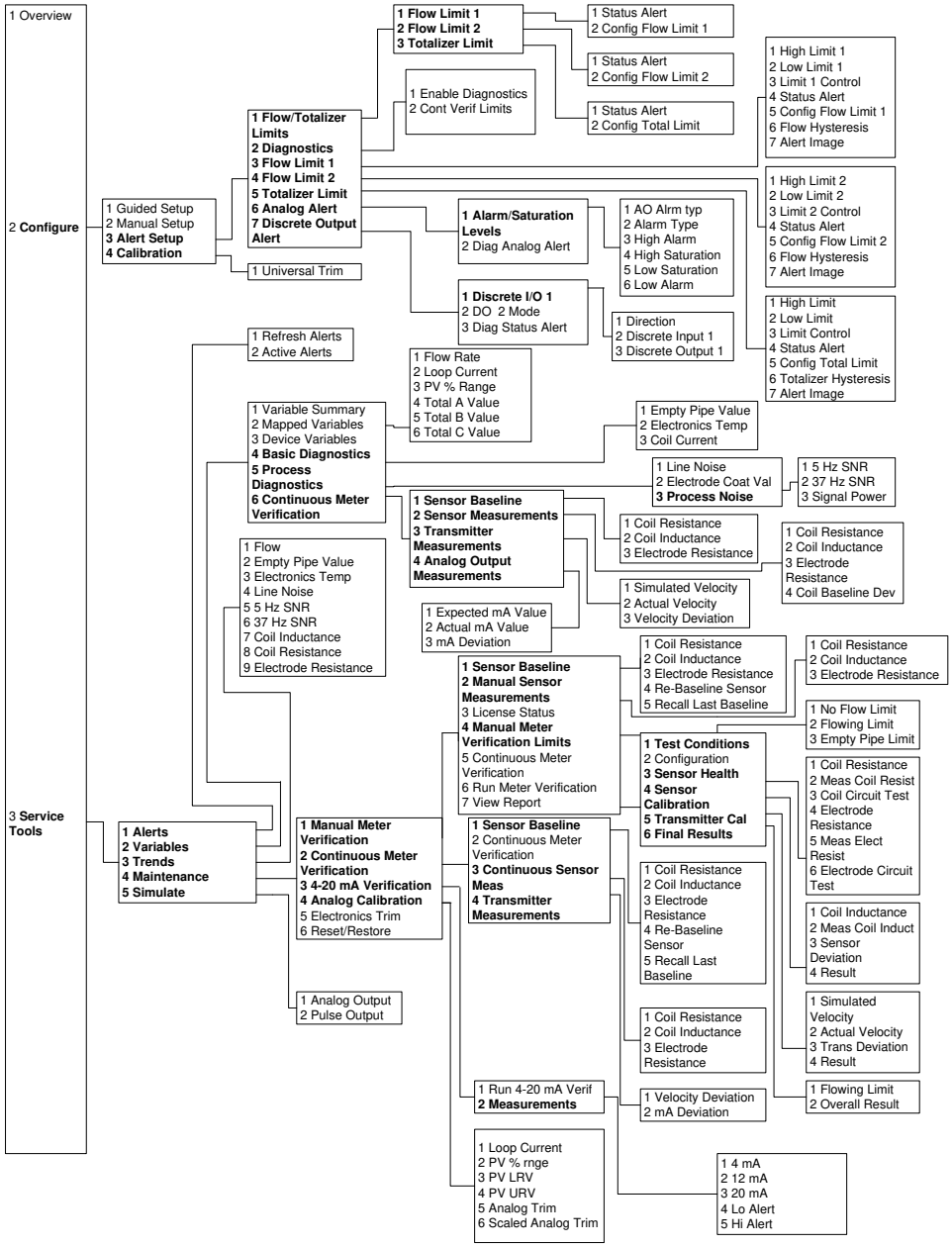

Figure 7-8: Field Communicator Dashboard Menu Tree (HART v7.1, part 1)

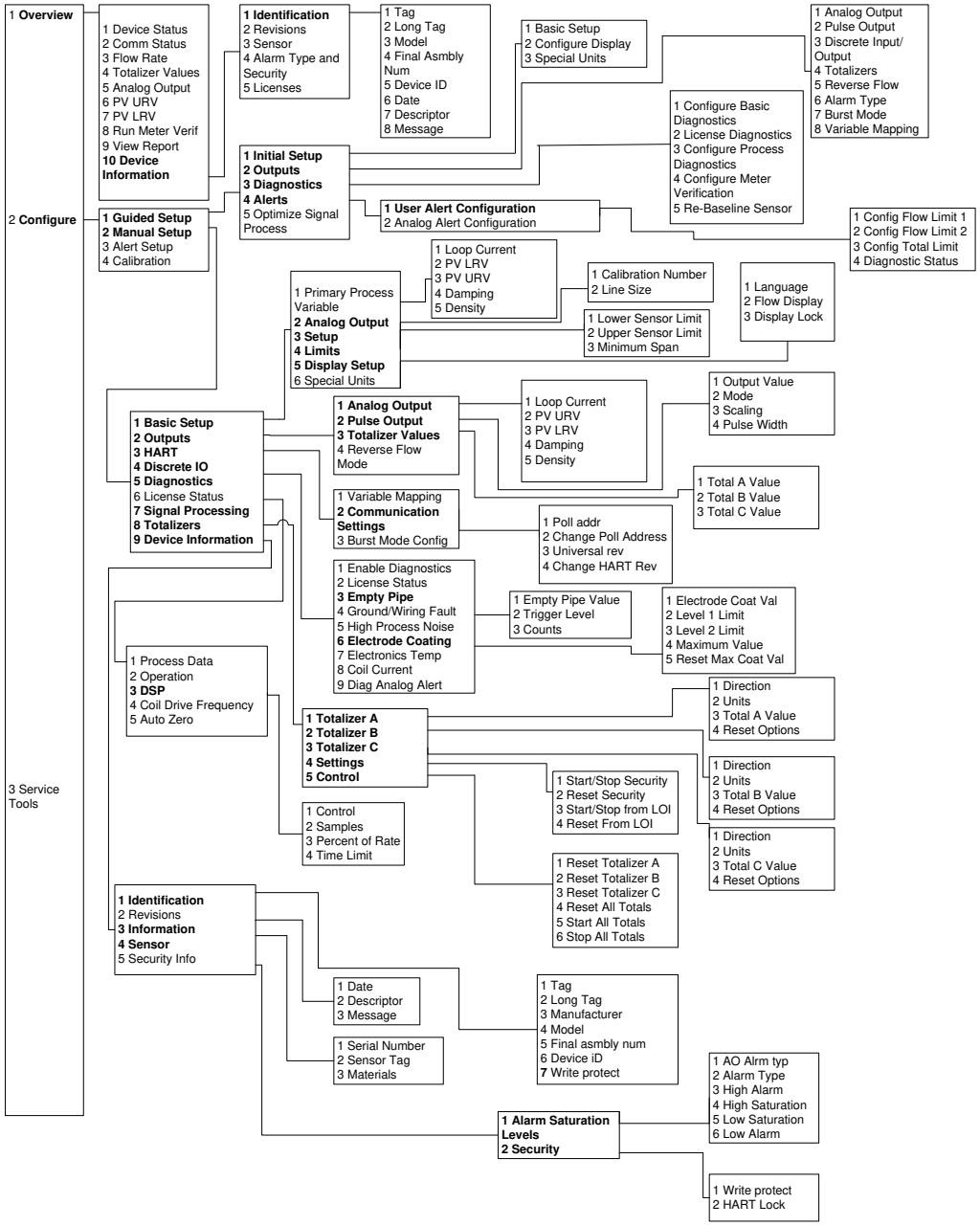

Figure 7-9: Field Communicator Dashboard Menu Tree (HART v7.1, part 2)

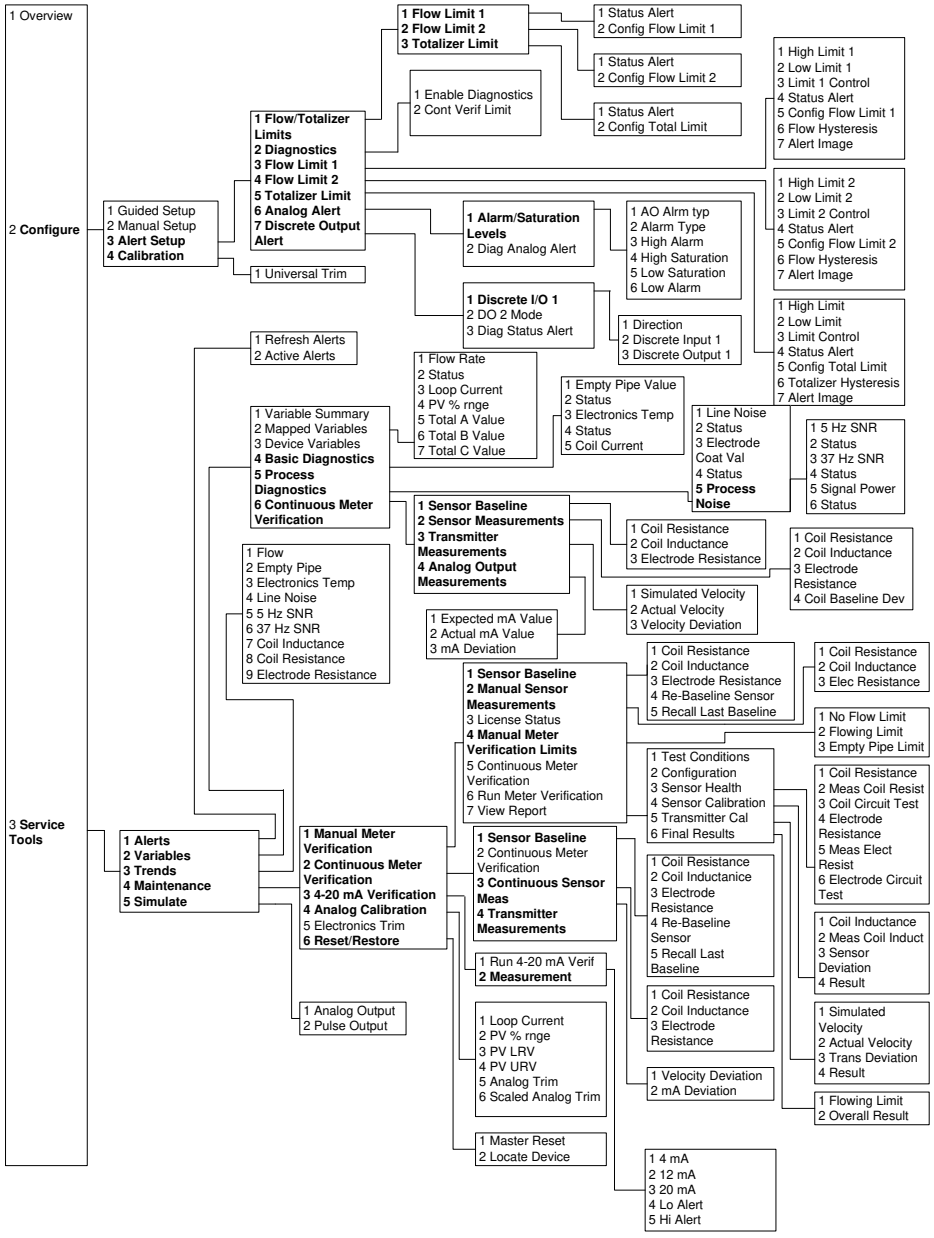

8 Advanced Configuration Functionality

Topics covered in this chapter:

- *Introduction*
- *Configure outputs*
- *Configure HART*
- *Configure LOI*
- *Additional parameters*
- *Configure special units*

8.1 Introduction

This section contains information for advanced configuration parameters.

The software configuration settings for the transmitter can be accessed through a HART®-based communicator, Local Operator Interface (LOI), AMS, or through a control system. Before operating the transmitter in an actual installation, you should review all of the factory set configuration data to ensure that they reflect the current application.

8.2 Configure outputs

LOI menu path	**Detailed Setup** > **Output Config**

The configure outputs functionality is used to configure advanced features that control the pulse, auxiliary, and totalizer outputs of the transmitter.

8.2.1 Analog output

LOI menu path	**Detailed Setup** > **Output Config** > **Analog**

The analog output function is used to configure all of the features of the 4-20 mA output.

Upper range value

LOI menu path	**Detailed Setup** > **Output Config** > **Analog** > **PV URV**

The *upper range value* (URV) sets the 20 mA point for the analog output. This value is typically set to full-scale flow. The units that appear will be the same as those selected under the units parameter. The URV may be set between –39.3 ft/s to 39.3 ft/s (–12 m/s to 12 m/s) or the equivalent range based on the selected flow units. There must be at least 1 ft/s (0.3 m/s) span or equivalent between the URV and LRV.

Lower range value

LOI menu path	**Detailed Setup** > **Output Config,** > **Analog** > **PV LRV**

The *lower range value* (LRV) sets the 4 mA point for the analog output. This value is typically set to zero flow. The units that appear will be the same as those selected under the units parameter. The LRV may be set between –39.3 ft/s to 39.3 ft/s (–12 m/s to 12 m/s) or the equivalent range based on the selected flow units. There must be at least 1 ft/s (0.3 m/s) span or equivalent between the URV and LRV.

Alarm type

LOI menu path	**Detailed Setup** > **Output Config** > **Analog** > **Alarm Type**

The analog output alarm type displays the position of the alarm switch on the electronics board. There are two available positions for this switch:

- High
- Low

Alarm level

LOI menu path	**Detailed Setup** > **Output Config** > **Analog** > **Alarm Level**

The alarm level configuration will drive the transmitter to preset values if an alarm occurs. There are two options:

- Rosemount Alarm and Saturation Values (see table *Table 8-1* for specific values)
- NAMUR-Compliant Alarm and Saturation Values (see *Table 8-2* for specific values)

Table 8-1: Rosemount Values

Level	4-20 mA saturation	4-20 mA alarm
Low	3.9 mA	3.75 mA
High	20.8 mA	22.5 mA

Table 8-2: NAMUR Values

Level	4-20 mA saturation	4-20 mA alarm

Table 8-2: NAMUR Values *(continued)*

Low	3.8 mA	3.5 mA
High	20.5 mA	22.6 mA

AO diagnostic alarm

LOI menu path	**Detailed Setup** > **Output Config** > **Analog** > **AO Diag Alarm**

There are diagnostics that, when under active conditions, do not drive the analog output to alarm level. The AO diagnostic alarm menu enables selection of these diagnostics to be associated with an analog alarm. If any of the selected diagnostics are active, it will cause the analog output to go to the configured alarm level. For a list of diagnostic alarms that can be configured to drive an analog alarm, see *Table 8-3*.

Table 8-3: Analog Alarm Diagnostic Options

Diagnostic	Description
Empty Pipe (1)	Drive to an alarm state when empty pipe is detected.
Reverse Flow	Drive to an alarm state when reverse flow is detected.
Grounding / Wiring Fault	Drive to an alarm state when grounding or wiring fault is detected.
High Process Noise	Drive to an alarm state when the transmitter detects high levels of process noise.
Electronics Temperature Out of Range	Drive to an alarm state when the temperature of the electronics exceeds allowable limits
Electrode Coating Limit 2	Drive to an alarm state when electrode coating reaches a point where it impacts the flow measurement
Totalizer Limit 1	Drive to an alarm state when the totalizer value exceeds the parameters set in the totalizer limit configuration (see page 5-x for more details on this functionality)
Flow Limit 1	Drive to an alarm state when the flow rate exceeds the parameters set in the flow limit 1 configuration (see page 5-x for more details on this functionality)
Flow Limit 2	Drive to an alarm state when the flow rate exceeds the parameters set in the flow limit 2 configuration (see page 5-x for more details on this functionality)

Table 8-3: Analog Alarm Diagnostic Options *(continued)*

Diagnostic	Description
Continuous Meter Verification	Drive to an alarm state when the continuous meter verification diagnostic detects a failure of one of the tests

(1) See Chapter 12 for more details on each of the diagnostics

8.2.2 Pulse output

LOI menu path	**Detailed Setup > Output Config > Pulse**

Under this function the pulse output of the transmitter can be configured.

Pulse scaling

LOI menu path	**Detailed Setup > Output Config > Pulse > Pulse Scaling**

Transmitter may be commanded to supply a specified frequency between 1 pulse/ day at 39.37 ft/sec (12 m/s) to 10,000Hz at 1 ft/sec (0.3 m/s).

Note

Line size, special units, and density must be selected prior to configuration of the pulse scaling factor.

The pulse output scaling equates one transistor switch closure pulse to a selectable number of volume units. The volume unit used for scaling pulse output is taken from the numerator of the configured flow units. For example, if gal/min had been chosen when selecting the flow unit, the volume unit displayed would be gallons.

Note

The pulse output scaling is designed to operate between 0 and 10,000Hz. The minimum conversion factor value is found by dividing the minimum span (in units of volume per second) by 10,000Hz.

Note

The maximum pulse scaling frequency for transmitters with an intrinsically safe output (output option code B) is 5000Hz.

When selecting pulse output scaling, the maximum pulse rate is 10,000Hz. With the 110 percent over range capability, the absolute limit is 11,000Hz. For example, if you want the transmitter to pulse every time 0.01 gallons pass through the sensor, and the flow rate is 10,000 gal/min, you will exceed the 10,000Hz full-scale limit:

$$\frac{10{,}000\ gal}{1\ min} \times \frac{1\ min}{(60\ sec)} \times \frac{1\ pulse}{0.01\ gal} = 16{,}666.7\ Hz$$

The best choice for this parameter depends upon the required resolution, the number of digits in the totalizer, the extent of range required, and the maximum frequency limit of the external counter.

Pulse factor units

The pulse factor unit assigns the unit of measure to the pulse scaling factor. The default read-only value is the unit of measure from the configured flow units. For example, if gal/min is selected when configuring the flow units, the pulse factor unit will be gallons.

Pulse width

LOI menu path	**Detailed Setup** > **Output Config** > **Pulse** > **Pulse Width**

The factory default pulse width is 0.5 ms.

The width, or duration, of the pulse can be adjusted to match the requirements of different counters or controllers (see *Figure 8-1*). These are typically lower frequency applications (< 1000Hz). The transmitter will accept values from 0.1 ms to 650 ms.

For frequencies higher than 1000Hz, it is recommended to set the pulse mode to 50% duty cycle by setting the pulse mode to frequency output.

The pulse width will limit the maximum frequency output, If the pulse width is set too wide (more than 1/2 the period of the pulse) the transmitter will limit the pulse output. See example below.

Figure 8-1: Pulse Output

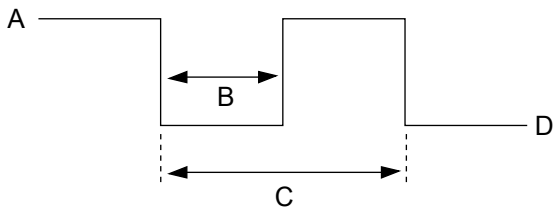

A. Open
B. Pulse width
C. Period
D. Closed

Example

If pulse width is set to 100 ms, the maximum output is 5Hz; for a pulse width of 0.5 ms, the maximum output would be 1000Hz (at the maximum frequency output there is a 50% duty cycle).

Pulse width	Minimum period (50% duty cycle)	Maximum frequency
100 ms	200 ms	$\frac{1\ cycle}{200\ ms} = 5\ Hz$
0.5 ms	1.0 ms	$\frac{1\ cycle}{1.0\ ms} = 1000\ Hz$

To achieve the greatest maximum frequency output, set the pulse width to the lowest value that is consistent with the requirements of the pulse output power source, pulse driven external totalizer, or other peripheral equipment.

The maximum flow rate is 10,000 gpm. Set the pulse output scaling such that the transmitter outputs 10,000Hz at 10,000 gpm.

$$Pulse\ Scaling = \frac{Flow\ Rate\ (gpm)}{(60\ \frac{sec}{min}) \times (frequency)}$$

$$Pulse\ Scaling = \frac{10{,}000\ gpm}{(60\ \frac{sec}{min}) \times (10{,}000\ Hz)}$$

$$Pulse\ Scaling = 0.0167\ \frac{gal}{pulse}$$

$$1\ pulse = 0.0167\ gal$$

Note

Changes to pulse width are only required when there is a minimum pulse width required for external counters, relays, etc.

The external counter is ranged for 350 gpm and pulse is set for one gallon. Assuming the pulse width is 0.5 ms, the maximum frequency output is 5.833Hz.

$$Frequency = \frac{Flow\ Rate\ (gpm)}{(60\ \frac{sec}{min}) \times (pulse\ scaling\ \frac{gal}{pulse})}$$

$$Pulse\ Scaling = \frac{350\ gpm}{(60\ \frac{sec}{min}) \times 1\ \frac{gal}{pulse}}$$

$$Frequency = 5.833\ Hz$$

The upper range value (20mA) is 3000 gpm. To obtain the highest resolution of the pulse output, 10,000Hz is scaled to the full scale analog reading.

$$Frequency = \frac{Flow\ Rate\ (gpm)}{(60\ \frac{sec}{min}) \times (pulse\ scaling\ \frac{gal}{pulse})}$$

$$Pulse\ Scaling = \frac{3{,}000\ gpm}{(60\ \frac{sec}{min}) \times 10{,}000\ Hz}$$

$$\text{Pulse Scaling} = 0.005\ \frac{gal}{pulse}$$

$$1\ pulse = 0.005\ gal$$

Pulse mode

LOI menu path	**Detailed Setup** > **Output Config** > **Pulse** > **Pulse Mode**

The pulse mode configures the frequency output of the pulse. It can be set to either 50% duty cycle, or fixed. There are two options that pulse mode can be configured to:

- Pulse Output (user defines a fixed pulse width)
- Frequency Output (pulse width automatically set to 50% duty cycle)

To use pulse width settings, pulse mode must be set to pulse output.

8.2.3 Totalizer

The totalizer provides the total amount of fluid that has passed through the meter. There are three available totalizers: Total A, Total B, and Total C. They can be independently configured for one of the following options:

- Net - increments with forward flow and decrements with reverse flow (reverse flow must be enabled).
- Reverse total - will only increment with reverse flow if reverse flow is enabled
- Forward total - will only increment with forward flow

All totalizer values will be reset if **line size** is changed. This will happen even if the totalizer reset control is set to **non-resettable**.

The totalizers have the capability to increment the total to a maximum value of 50 feet per second of flow (or the volumetric equivalent) for a period of 20 years before roll-over occurs.

View Totals

LOI menu path	Totalizer A: **Totalizers** > **View Total A** Totalizer B: **Totalizers** > **View Total B** Totalizer C: **Totalizers** > **View Total C**

Displays the current value for each totalizer and shows the totalizer incrementing/decrementing based on totalizer configuration and flow direction.

Configure totalizers

LOI menu path	**Totalizers** > **Config/Control**

Start, stop, and reset all totalizers, configure the independent totalizers, and security controls for write protecting and resetting the individual totalizers.

Note

If an individual totalizer is configured as non-resettable, the global totalizer reset command will *not* affect that totalizer.

Note

If an individual totalizer is configured as write protected, the global totalizer start/stop/reset commands will *not* affect that totalizer.

Totalizer direction

LOI menu path	Totalizer A: **Totalizers** > **Config/Control** > **Total A** > **Total A Config** > **Direction** Totalizer B: **Totalizers** > **Config/Control** > **Total B** > **Total B Config** > **Direction** Totalizer C: **Totalizers** > **Config/Control** > **Total C** > **Total C Config** > **Direction**

Configure the direction for the totalizers as either Net, Forward, or Reverse.

Totalizer units

LOI menu path	Totalizer A: **Totalizers** > **Config/Control** > **Total A** > **Total A Config** > **TotA Units** Totalizer B: **Totalizers** > **Config/Control** > **Total B** > **Total B Config** > **TotB Units** Totalizer C: **Totalizers** > **Config/Control** > **Total C** > **Total C Config** > **TotC Units**

Configure the units for totalizers.

Reset configuration

LOI menu path	Totalizer A: **Totalizers** > **Config/Control** > **Total A** > **Total A Config** > **TotA Reset Config** Totalizer B: **Totalizers** > **Config/Control** > **Total B** > **Total B Config** > **TotB Reset Config** Totalizer C: **Totalizers** > **Config/Control** > **Total C** > **Total C Config** > **TotC Reset Config**

Configure if the totalizer is non-resettable, or if it can be reset through the reset commands.

Reset individual totalizer

LOI menu path	Totalizer A: **Totalizers** > **Config/Control** > **Total A** > **Reset Total A** Totalizer B: **Totalizers** > **Config/Control** > **Total B** > **Reset Total B** Totalizer C: **Totalizers** > **Config/Control** > **Total C** > **Reset Total C**

Independently reset the totalizers. This requires the reset option to be configured as resettable.

Reset all totalizers

LOI menu path	**Totalizers** > **Config/Control** > **Reset All**

This global command will reset totalizer values to zero for all totalizers that have been configured as resettable.

Totalizer security

LOI menu path	**Totalizers** > **Config/Control** > **Security**

Configure totalizer security capabilities for the Local Operator Interface and write protection.

LOI control

LOI menu path	**Totalizers** > **Config/Control** > **Security** > **LOI Control**

Configure the ability to start, stop, and reset the totalizers through the LOI.

LOI totalizer start/stop

LOI menu path	**Totalizers > Config/Control > Security > LOI Control > LOI Start/ Stop**

Enable/disable the ability to start or stop totalizers through the LOI.

LOI totalizer reset

LOI menu path	**Totalizers > Config/Control > Security > LOI Control > LOI Reset**

Enable/disable the ability to reset the totalizers through the LOI.

Totalizer write protection

LOI menu path	**Totalizers > Config/Control > Security > Write Protect**

In addition to controlling the LOI capability to start/stop and reset the totalizers, specific write protect functionality can also be configured adding an additional level of security to the totalizers.

Start/stop write protect

LOI menu path	**Totalizers > Config/Control > Security > Write Protect > WP Start/ Stop**

Configure write protection on the ability to start or stop the totalizers. This is a global command and applies to all totalizers.

Reset write protect

LOI menu path	**Totalizers > Config/Control > Security > Write Protect > WP Reset**

Configure write protection on the ability to reset the totalizers. This is a global command and applies to all totalizers.

8.2.4 Discrete input/output

This configuration option is only available if the auxiliary output suite (option code AX) was ordered. The auxiliary output suite provides two channels for control.

- The discrete output control function can be configured to drive an external signal to indicate zero flow, reverse flow, empty pipe, diagnostic status, flow limit, or transmitter status.

A complete list and description of the available auxiliary functions is provided below.

Discrete input options (Channel 1 only)

PZR (Positive Zero Return)	When conditions are met to activate the input, the transmitter will force the output to zero flow.
Net Total Reset	When conditions are met to activate the input, the transmitter will reset the net total value to zero.

Discrete output options

Reverse Flow	The output will activate when the transmitter detects a reverse flow condition.
Zero Flow	The output will activate when a no flow condition is detected.
Transmitter Fault	The output will activate when a transmitter fault condition is detected.
Empty Pipe	The output will activate when the transmitter detects an empty pipe condition.
Flow Limit 1	The output will activate when the transmitter measures a flow rate that meets the conditions established for the flow limit 1 alert.
Flow Limit 2	The output will activate when the transmitter measures a flow rate that meets the conditions established for the flow limit 2 alert.
Diagnostic Status Alert	The output will activate when the transmitter detects a condition that meets the configured criteria of the diagnostic status alert.
Total Limit	The output will activate when the transmitter Totalizer A value meets the conditions established for the total limit alert.

Channel 1

Channel 1 can be configured as either a discrete input (DI) or as a discrete output (DO).

DI/O 1 control

LOI menu path	**Detailed Setup** > **Output Config** > **DI/DO Config** > **DI/O 1** > **DI/O 1 Control**

This parameter configures the auxiliary output channel 1. It controls whether channel 1 will be a discrete input or discrete output on terminals.

Note

The transmitter must have been ordered with the auxiliary output suite (option code AX) to have access to this functionality.

Discrete input 1

LOI menu path	**Detailed Setup** > **Output Config** > **DI/DO Config** > **DI/O 1** > **DI 1**

This parameter displays the configuration for channel 1 when used as a discrete input.

Discrete output 1

LOI menu path	**Detailed Setup** > **Output Config** > **DI/DO Config** > **DI/O 1** > **DO 1**

This parameter displays the configuration for channel 1 when used as a discrete output.

Channel 2

Channel 2 is available as discrete output only.

Discrete output 2

LOI menu path	**Detailed Setup** > **Output Config** > **DI/DO Config** > **DO 2**

This parameter displays the configuration for channel 2.

Flow limit (1 and 2)

There are two configurable flow limits. Configure the parameters that will determine the criteria for activation of a alert if the measured flow rate falls within a set of configured criteria. This functionality can be used for operating simple batching operations or generating alerts when certain flow conditions are met. This parameter can be configured as a discrete output if the transmitter was ordered with the auxiliary output suite (option code AX) and the outputs are enabled. If a discrete output is configured for flow limit, the discrete output will activate when the conditions defined under mode configuration are met. See *Mode* below.

Control

LOI menu path	Flow 1: **Detailed Setup** > **Output Config** > **DI/DO Config** > **Flow Limit 1** > **Control 1** Flow 2: **Detailed Setup** > **Output Config** > **DI/DO Config** > **Flow Limit 2** > **Control 2**

This parameter turns the flow limit alert ON or OFF.

ON The transmitter will generate a alert when the defined conditions are met. If a discrete output is configured for flow limit, the discrete output will activate when the conditions for mode are met.

OFF The transmitter will not generate an alert for the flow limit.

Mode

LOI menu path	Flow 1: **Detailed Setup** > **Output Config** > **DI/DO Config** > **Flow Limit 1** > **Mode 1** Flow 2: **Detailed Setup** > **Output Config** > **DI/DO Config** > **Flow Limit 2** > **Mode 2**

The mode parameter sets the conditions under which the flow limit alert will activate. High and low limits exist for each channel and can be configured independently.

High limit

LOI menu path	Flow 1: **Detailed Setup** > **Output Config** > **DI/DO Config** > **Flow Limit 1** > **High Limit 1** Flow 2: **Detailed Setup** > **Output Config** > **DI/DO Config** > **Flow Limit 2** > **High Limit 2**

Set the flow rate value that corresponds to the high limit set point for the flow limit alert.

Low limit

LOI menu path	Flow 1: **Detailed Setup** > **Output Config** > **DI/DO Config** > **Flow Limit 1** > **Low Limit 1** Flow 2: **Detailed Setup** > **Output Config** > **DI/DO Config** > **Flow Limit 2** > **Low Limit 2**

Set the flow rate value that corresponds to the low limit set point for the flow limit alert.

Flow limit hysteresis

LOI menu path	Flow 1: **Detailed Setup** > **Output Config** > **DI/DO Config** > **Flow Limit 1** > **Hysteresis** Flow 2: **Detailed Setup** > **Output Config** > **DI/DO Config** > **Flow Limit 2** > **Hysteresis**

Set the hysteresis band for the flow limit to determine how quickly the transmitter comes out of alert status. The hysteresis value is used for both flow limit 1 and flow limit 2. Changing this parameter under the configuration parameters for one channel will cause it to also change in the other channel.

Total limit

Configure the parameters that will determine the criteria for activating a alert if Totalizer A falls within a set of configured criteria. This functionality can be used for operating simple batching operations or generating alerts when certain localized values are met. This

parameter can be configured as a discrete output if the transmitter was ordered with auxiliary outputs enabled (option code AX). If a digital output is configured for total limit, the digital output will activate when the conditions for total mode are met.

Total control

LOI menu path	**Detailed Setup** > **Output Config** > **DI/DO Config** > **Total Limit** > **Total Control**

Total mode

LOI menu path	**Detailed Setup** > **Output Config** > **DI/DO Config** > **Total Limit** > **Total Mode**

Total high limit

LOI menu path	**Detailed Setup** > **Output Config** > **DI/DO Config** > **Total Limit** > **Tot Hi Limit**

Set Totalizer A to a value that corresponds to the high limit set point for the total high limit alert.

Total low limit

LOI menu path	**Detailed Setup** > **Output Config** > **DI/DO Config** > **Total Limit** > **Tot Low Limit**

Set the net total value that corresponds to the low limit set point for the total low limit alert.

Total limit hysteresis

LOI menu path	**Detailed Setup** > **Output Config** > **DI/DO Config** > **Total Limit** > **Hysteresis**

Set the hysteresis band for the total limit to determine how quickly the transmitter comes out of alert status.

Diagnostic status alert

LOI menu path	**Detailed Setup** > **Output Config** > **DI/DO Config** > **Diag Alert**

8.3 Configure HART

The transmitter has four HART variables available as outputs. The variables can be configured for dynamic readings including flow, total, and diagnostic values. The HART output can also be configured for burst mode or multi-drop communication if required.

8.3.1 Variable mapping

Variable mapping allows configuration of the variables that are mapped to the secondary, tertiary and quaternary variables. The primary variable is fixed to output flow and cannot be configured.

Primary variable (PV)

The primary variable is configured for flow. This variable is fixed and cannot be configured. The primary variable is tied to the analog output.

Secondary variable (SV)

The secondary variable maps the second variable of the transmitter. This variable is a HART only variable and can be read from the HART signal with a HART enabled input card, or can be burst for use with a HART Tri-Loop to convert the HART signal to an analog output. Options available for mapping to this variable can be found in *Table 8-4*.

Tertiary variable (TV)

The tertiary variable maps the third variable of the transmitter. This variable is a HART only variable and can be read from the HART signal with a HART enabled input card, or can be burst for use with a HART Tri-Loop to convert the HART signal to an analog output. Options available for mapping to this variable can be found in *Table 8-4*.

Quaternary variable (QV)

The quaternary variable maps the fourth variable of the transmitter. This variable is a HART only variable and can be read from the HART signal with a HART enabled input card, or can be burst for use with a HART Tri-Loop™ to convert the HART signal to an analog output. Options available for mapping to this variable can be found in *Table 8-4*.

Table 8-4: Available Variables

Flow Rate	Empty Pipe Value
Pulse Output	Transmitter Velocity Deviation
Totalizer A	Electrode Coating Value
Totalizer B	Electrode Resistance
Totalizer C	Coil Resistance Value
Electronics Temperature	Coil Inductance Value
Line Noise	Coil Baseline Deviation
5 Hz SNR	Analog Output Feedback Deviation
37 Hz SNR	Coil Current

Table 8-4: Available Variables *(continued)*

Signal Power	

8.3.2 Poll address

Poll address enables the transmitter to be used in point-to-point mode or multi-drop mode. When in multi-drop mode, the poll address is used to identify each meter on the multi-drop line.

The transmitter poll address is set to zero at the factory, allowing standard operation in a point-to-point manner with a 4-20 mA output signal. To activate multi-drop communication, the transmitter poll address must be changed to a non-zero integer; for HART 5 between 1-15, for HART 7 between 1-63. This change fixes the analog output current to 4 mA and disables the failure mode alarm signal.

8.3.3 Loop current mode

Available on HART 7 through the LOI only.

When loop current mode is set to **ON**, the analog output current tracks with changes in PV. When loop current mode is **OFF**, the analog output current is fixed at 4mA.

8.3.4 HART revision

Transmitter electronics supporting software revision v5.4 have a fixed HART 5 menu configuration. Transmitter electronics supporting software revision v5.5 or v7.1 can be configured for either HART 5 or HART 7 menu configurations.

Universal revision

Read-only informational variable that reflects the setting of the HART revision in the transmitter.

Change HART revision

On enabled devices, this function allows the user to change between HART 5 or HART 7.

8.3.5 Burst mode

The transmitter includes a burst mode function that can be enabled to broadcast the primary variable or all dynamic variables approximately three to four times per second. Burst mode is a specialized function used in very specific applications. The burst mode function enables you to select the variables that are broadcast while in the burst mode.

Burst mode enables you to set the burst mode as OFF or ON:

- OFF - Turns burst mode off; no data are broadcast over the loop
- ON - Turns burst mode on; data selected under burst option are broadcast over the loop

Additional burst mode capabilities, not visible from the LOI, are available through a HART host.

Burst option (burst command)—HART 5 only

Burst option enables you to select the variable(s) that is broadcast during the transmitter burst. Choose one of the following options:

- 1; PV; Primary Variable - Selects the primary variable
- 2; % range/current; Percent of Range and Loop Current - Selects the variable as percent of range and analog output
- 3; Process vars/crnt; All Variables and Loop Current - Selects all variables and analog output
- 110; Dynamic vars; Dynamic Variables - Burst all dynamic variables in the transmitter

Request preambles

Request preambles is the number of preambles required by the transmitter for HART communications.

Response preambles

Response preambles is the number of preambles sent by the transmitter in response to any host request.

8.3.6 Configure LOI

The LOI configuration contains functionality to configure the display of the transmitter.

Flow display

Use flow display to configure the parameters that will appear on the LOI flowrate screen. The flowrate screen displays two lines of information. Choose one of the following options:

- Flowrate, % of Span
- Flow, Total A
- % Span, Total A
- Flow, Total B
- % Span, Total B
- Flow, Total C
- % Span, Total C

Language

Use language to configure the display language shown on the LOI. Choose one of the following options:

- English
- Spanish

- Portuguese
- German
- French

LOI error mask

Use LOI error mask to turn off the analog output power error message (AO No Power). This may be desired if the analog output is not being used.

Display auto lock

Use display auto lock to configure the LOI to automatically lock the LOI after a set period of time. Choose one of the following options:

- OFF
- 1 Minute
- 10 Minutes (default)

LOI backlight control

To conserve power, the LOI backlight can be configured to automatically turn off after a set amount of time without keypad activity. Configure the timeout control for the LOI backlight using the following options:

- Always OFF (default for low power)
- 10 Seconds
- 20 Seconds
- 30 Seconds
- Always ON (default)

8.4 Configure LOI

The LOI configuration contains functionality to configure the display of the transmitter.

8.4.1 Flow display

LOI menu path	**Detailed Setup > LOI Config > Flow Display**

Use flow display to configure the parameters that will appear on the LOI flowrate screen. The flowrate screen displays two lines of information.

8.4.2 Language

LOI menu path	**Detailed Setup > LOI Config > Language**

Use language to configure the display language shown on the LOI.

8.4.3 Backlight control

LOI menu path	**Detailed Setup > LOI Config > Backlight**

To conserve power, the LOI backlight can be configured to automatically turn off after a set amount of time without keypad activity.

8.4.4 LOI display lock

LOI menu path	**Detailed Setup > LOI Config > Disp Auto Lock**

The transmitter has display lock functionality to prevent unintentional configuration changes. The display can be locked manually or configured to automatically lock after a set period of time. The display is always locked on the flow screen

8.5 Additional parameters

The following parameters may be required for detailed configuration settings based on your application.

8.5.1 Coil drive frequency

LOI menu path	**Detailed Setup > More Params > Coil Frequency**

Use coil drive frequency to change the pulse rate of the coils.

See *Section 10.5.2*.

8.5.2 Process density

LOI menu path	**Detailed Setup > More Params > Proc Density**

Use the process density value to convert from a volumetric flow rate to a mass flow rate using the following equation:

Qm = Qv x p

Where:

Qm is the mass flow rate

Qv is the volumetric flow rate, and

p is the fluid density

8.5.3 Reverse flow

LOI menu path	**Detailed Setup** > **Output Config** > **Reverse Flow**

Use reverse flow to enable or disable the transmitter's ability to read flow in the opposite direction of the flow direction arrow (see *Section 3.2.3*). This may occur when the process has bi-directional flow, or when either the electrode wires or the coil wires are reversed (see Troubleshooting *Section 12.3.3*). This also enables the totalizer to count in the reverse direction.

8.5.4 Low flow cutoff

LOI menu path	**Detailed Setup** > **Sig Processing** > **Lo-Flow Cutoff**

Low flow cutoff allows the user to set a low flow limit to be specified. The low flow cutoff units are the same as the PV units and cannot be changed. The low flow cutoff value applies to both forward and reverse flows.

8.5.5 PV (flow) damping

LOI menu path	**Detailed Setup** > **Sig Processing** > **Damping**

Primary variable damping allows selection of a response time, in seconds, to a step change in flow rate. It is most often used to smooth fluctuations in output.

8.5.6 Signal processing

The transmitter contains several advanced functions that can be used to stabilize erratic outputs caused by process noise. The signal processing menu contains this functionality.

If the 37 Hz coil drive mode has been set, and the output is still unstable, the damping and signal processing function should be used. It is important to set the coil drive mode to 37 Hz first, so the loop response time is not increased.

The transmitter provides for a very easy and straightforward start-up, and also incorporates the capability to deal with difficult applications that have previously manifested themselves in a noisy output signal. In addition to selecting a higher coil drive

frequency (37 Hz vs. 5 Hz) to isolate the flow signal from the process noise, the microprocessor can actually scrutinize each input based on three user-defined parameters to reject the noise specific to the application.

See *Chapter 10* for the detailed description of how the signal processing works.

8.6 Configure special units

Special units are used when the application requires units that are not included in the flow units available from the device. Refer to for a complete list of the available units.

8.6.1 Base volume unit

LOI menu path	**Basic Setup** > **Flow Units** > **Special Units** > **Base Vol Units**

Base volume unit is the unit from which the conversion is being made. Set this variable to the appropriate option.

8.6.2 Conversion factor

LOI menu path	**Basic Setup** > **Flow Units** > **Special Units** > **Conv Factor**

The special units conversion factor is used to convert base units to special units. For a straight conversion of units from one unit of measure to a different unit of measure, the conversion factor is the number of base units in the new unit.

If you are converting from gallons to barrels and there are 31 gallons in a barrel, the conversion factor is 31.

8.6.3 Base time unit

LOI menu path	**Basic Setup** > **Flow Units** > **Special Units** > **Base Time Unit**

Base time unit provides the time unit from which to calculate the special units.For example, if your special units is a volume per minute, select minutes.

8.6.4 Special volume unit

LOI menu path	**Basic Setup** > **Flow Units** > **Special Units** > **Volume Unit**

Special volume unit enables you to display the volume unit format to which you have converted the base volume units.

If the special units are abc/min, the special volume variable is abc. The volume units variable is also used in totalizing the special units flow.

8.6.5 Special flow rate unit

LOI menu path	**Basic Setup** > **Flow Units** > **Special Units** > **Rate Unit**

Flow rate unit is a format variable that provides a record of the units to which you are converting. The Handheld Communicator will display a special units designator as the units format for your primary variable. The actual special units setting you define will not appear. Four characters are available to store the new units designation. The LOI will display the four character designation as configured.

To display flow in acre-feet per day, and acre-foot is equal to 43560 cubic feet, the procedure would be:

1. Set the volume unit to ACFT.
2. Set the base volume unit to ft3.
3. Set the conversion factor to 43560.
4. Set the time base unit to Day.
5. Set the flow rate unit to AF/D.

9 Advanced Diagnostics Configuration

Topics covered in this chapter:

- *Introduction*
- *Licensing and enabling*
- *Tunable empty pipe detection*
- *Electronics temperature*
- *Ground/wiring fault detection*
- *High process noise detection*
- *Coated electrode detection*
- *4-20 mA loop verification*
- *SMART™ Meter Verification*
- *Run manual SMART Meter Verification*
- *Continuous SMART Meter Verification*
- *SMART Meter Verification test results*
- *SMART Meter Verification measurements*
- *Optimizing the SMART Meter Verification*

9.1 Introduction

Rosemount magnetic flowmeters provide device diagnostics that detect and warn of abnormal situations throughout the life of the meter - from installation to maintenance and meter verification. With Rosemount magnetic flowmeter diagnostics enabled, plant availability and throughput can be improved, and costs through simplified installation, maintenance and troubleshooting can be reduced.

Table 9-1: Basic diagnostics availability

Diagnostic name	Diagnostic category	Product capability
Tunable Empty Pipe	Process	Standard
Electronics Temperature	Maintenance	Standard
Coil Fault	Maintenance	Standard
Transmitter Fault	Maintenance	Standard
Reverse Flow	Process	Standard
Electrode Saturation	Process	Standard
Coil Current	Maintenance	Standard
Coil Power	Maintenance	Standard

Table 9-2: Advanced diagnostics availability

Diagnostic name	Diagnostic category	Product capability
High Process Noise	Process	Suite 1 (DA1)
Grounding and Wiring Fault	Installation	Suite 1 (DA1)
Coated Electrode Detection	Process	Suite 1 (DA1)
Commanded Meter Verification	Meter Health	Suite 2 (DA2)
Continuous Meter Verification	Meter Health	Suite 2 (DA2)
4-20 mA Loop Verification	Installation	Suite 2 (DA2)

Options for accessing Rosemount Magmeter Diagnostics

Rosemount Magmeter Diagnostics can be accessed through the Local Operator Interface (LOI), a Field Communicator, and AMS® Device Manager.

Access diagnostics through the LOI for quicker installation, maintenance, and meter verification

Rosemount Magmeter Diagnostics are available through the LOI to make maintenance of every magmeter easier.

Access diagnostics through AMS Device Manager

The value of the diagnostics increases significantly when AMS is used. The user will see simplified screen flow and procedures on how to respond to the diagnostics messages.

9.2 Licensing and enabling

All advanced diagnostics are licensed by ordering option code DA1, DA2, or both. In the event that a diagnostic option is not ordered, advanced diagnostics can be licensed in the field through the use of a license key. Each transmitter has a unique license key specific to the diagnostic option code. A trial license is also available to enable the advanced diagnostics. This temporary functionality will be automatically disabled after 30-days or when power to the transmitter is cycled, whichever occurs first. This trial code can be used a maximum of three times per transmitter. See the detailed procedures below for entering the license key and enabling the advanced diagnostics. To obtain a permanent or trial license key, contact your local Rosemount representative.

9.2.1 Licensing the diagnostics

1. Power up the transmitter.
2. Verify the software version is 4.4 software or later.

LOI menu path	**Detailed Setup** > **Device Info** > **Software Rev**

3. Determine the Device ID.

LOI menu path	**Detailed Setup** > **Device Info** > **Device ID**

4. Obtain a license key from a local Rosemount representative.
5. Enter license key.

LOI menu path	**Diagnostics** > **Advanced Diag** > **Licensing** > **License Key** > **License Key**

6. Enable Diagnostics.

LOI menu path	**Diagnostics** > **Diag Controls**

9.3 Tunable empty pipe detection

The tunable empty pipe detection provides a means of minimizing issues and false readings when the pipe is empty. This is most important in batching applications where the pipe may run empty with some regularity. If the pipe is empty, this diagnostic will activate, set the flow rate to 0, and deliver an alert.

Turning empty pipe on/off

LOI menu path	**Diagnostics** > **Diag Controls** > **Empty Pipe**

The tunable empty pipe detection diagnostic can be turned on or off as required by the application. The empty pipe diagnostic is shipped turned “On” by default.

9.3.1 Tunable empty pipe parameters

The tunable empty pipe diagnostic has one read-only parameter, and two parameters that can be custom configured to optimize the diagnostic performance.

Empty pipe (EP) value

LOI menu path	**Diagnostics** > **Variables** > **Empty Pipe**

This parameter shows the current empty pipe value. This is a read-only value. This number is a unit-less number and is calculated based on multiple installation and process variables such as sensor type, line size, process fluid properties, and wiring. If the empty pipe value exceeds the empty pipe trigger level for a specified number of updates, then the empty pipe diagnostic alert will activate.

Empty pipe (EP) trigger level

LOI menu path	**Diagnostics** > **Basic Diag** > **Empty Pipe** > **EP Trig Level**

Limits: 3 to 2000

Empty pipe trigger level is the threshold limit that the empty pipe value must exceed before the empty pipe diagnostic alert activates. The default setting from the factory is 100.

Empty pipe (EP) counts

LOI menu path	**Diagnostics** > **Basic Diag** > **Empty Pipe** > **EP Counts**

Limits: 2 to 50

Empty pipe counts is the number of consecutive updates that the transmitter must receive where the empty pipe value exceeds the empty pipe trigger level before the empty pipe diagnostic alert activates. The default setting from the factory is 5.

9.3.2 Optimizing tunable empty pipe

The tunable empty pipe diagnostic is set at the factory to properly diagnose most applications. If this diagnostic activates, the following procedure can be followed to optimize the empty pipe diagnostic for the application.

Procedure

1. Record the empty pipe value with a full pipe condition.

   Example:

   Full reading = 0.2

2. Record the empty pipe value with an empty pipe condition.

   Example:

   Empty reading = 80.0

3. Set the empty pipe trigger level to a value between the full and empty readings.

   For increased sensitivity to empty pipe conditions, set the trigger level to a value closer to the full pipe value.

   Example:

   Set the trigger level to 25.0

4. Set the empty pipe counts to a value corresponding to the desired sensitivity level for the diagnostic.

For applications with entrained air or potential air slugs, less sensitivity may be desired.

Example:

Set the counts to 10

9.4 Electronics temperature

The transmitter continuously monitors the temperature of the internal electronics. If the measured electronics temperature exceeds the operating limits of –40 to 140 °F (–40 to 60 °C) the transmitter will go into alarm and generate an alert.

9.4.1 Turning electronics temperature on/off

LOI menu path	**Diagnostics** > **Diag Controls** > **Elect Temp**

The electronics temperature diagnostic can be turned on or off as required by the application.The electronics temperature diagnostic will be turned on by default.

9.4.2 Electronics temperature parameters

The electronics temperature diagnostic has one read-only parameter. It does not have any configurable parameters.

LOI menu path	**Diagnostics** > **Variables** > **Elect Temp**

This parameter shows the current temperature of the electronics. This is a read-only value.

9.5 Ground/wiring fault detection

The transmitter continuously monitors signal amplitudes over a wide range of frequencies. For the ground/wiring fault detection diagnostic, the transmitter specifically looks at the signal amplitude at frequencies of 50 Hz and 60 Hz which are the common AC cycle frequencies found throughout the world. If the amplitude of the signal at either of these frequencies exceeds 5 mV, that is an indication that there is a ground or wiring issue and that stray electrical signals are getting into the transmitter. The diagnostic alert will activate indicating that the ground and wiring of the installation should be carefully reviewed.

The ground/wiring fault detection diagnostic provides a means of verifying installations are done correctly. If the installation is not wired or grounded properly, this diagnostic will activate and deliver an alert. This diagnostic can also detect if the grounding is lost over-time due to corrosion or another root cause.

9.5.1 Turning ground/wiring fault on/off

LOI menu path	**Diagnostics** > **Diag Controls** > **Ground/Wiring**

The ground/wiring fault detection diagnostic can be turned on or off as required by the application. If the advanced diagnostics suite 1 (DA1 Option) was ordered, then the ground/wiring fault detection diagnostic will be turned on. If DA1 was not ordered or licensed, this diagnostic is not available.

9.5.2 Ground/wiring fault parameters

The ground/wiring fault detection diagnostic has one read-only parameter. It does not have any configurable parameters.

Line noise

LOI menu path	**Diagnostics** > **Variables** > **Line Noise**

The line noise parameter shows the amplitude of the line noise. This is a read-only value. This number is a measure of the signal strength at 50/60 Hz. If the line noise value exceeds 5 mV, then the ground/wiring fault diagnostic alert will activate.

9.6 High process noise detection

The high process noise diagnostic detects if there is a process condition causing an unstable or noisy reading that is not an actual flow variation. A common cause of high process noise is slurry flow, like pulp stock or mining slurries. Other conditions that cause this diagnostic to activate are high levels of chemical reaction or entrained gas in the liquid. If unusual noise or flow variation is seen, this diagnostic will activate and deliver an alert. If this situation exists and is left without remedy, it will add additional uncertainty and noise to the flow reading.

9.6.1 Turning high process noise on/off

LOI menu path	**Diagnostics** > **Diag Controls** > **Process Noise**

The high process noise diagnostic can be turned on or off as required by the application. If the advanced diagnostics suite 1 (DA1 Option) was ordered, then the high process noise diagnostic will be turned on. If DA1 was not ordered or licensed, this diagnostic is not available.

9.6.2 High process noise parameters

The high process noise diagnostic has two read-only parameters. It does not have any configurable parameters. This diagnostic requires that flow be present in the pipe and the velocity be greater than1 ft/s (0.3 m/s).

5 Hz signal to noise ratio (SNR)

LOI menu path	**Diagnostics** > **Variables** > **5Hz SNR**

This parameter shows the value of the signal to noise ratio at the coil drive frequency of 5 Hz. This is a read-only value. This number is a measure of the signal strength at 5 Hz relative to the amount of process noise. If the transmitter is operating in 5 Hz mode, and the signal to noise ratio remains below 25 for one minute, then the high process noise diagnostic alert will activate.

37 Hz signal to noise ratio (SNR)

LOI menu path	**Diagnostics** > **Variables** > **37Hz SNR**

This parameter shows the current value of the signal to noise ratio at the coil drive frequency of 37 Hz. This is a read-only value. This number is a measure of the signal strength at 37 Hz relative to the amount of process noise. If the transmitter is operating in 37 Hz mode, and the signal to noise ratio remains below 25 for one minute, then the high process noise diagnostic alert will activate.

9.7 Coated electrode detection

The coated electrode detection diagnostic provides a means of monitoring insulating coating buildup on the measurement electrodes. If coating is not detected, buildup over time can lead to a compromised flow measurement. This diagnostic can detect if the electrode is coated and if the amount of coating is affecting the flow measurement. There are two levels of electrode coating.

- Limit 1 indicates when coating is starting to occur, but has not compromised the flow measurement.
- Limit 2 indicates when coating is affecting the flow measurement and the meter should be serviced immediately.

9.7.1 Turning coated electrode detection on/off

LOI menu path	**Diagnostics** > **Diag Controls** > **Elec Coating**

The coated electrode detection diagnostic can be turned on or off as required by the application. If the advanced diagnostics suite 1 (DA1 option) was ordered, then the coated electrode detection diagnostic will be turned on. If DA1 was not ordered or licensed, this diagnostic is not available.

9.7.2 Coated electrode parameters

The coated electrode detection diagnostic has four parameters. Two are read-only and two are configurable parameters. The electrode coating parameters need to be initially monitored to accurately set the electrode coating limit levels for each application.

Electrode coating (EC) value

LOI menu path	**Diagnostics > Advanced Diag > Elec Coating > EC Current Val**

The electrode coating value reads the value of the coated electrode detection diagnostic.

Electrode coating (EC) level 1 limit

LOI menu path	**Diagnostics > Advanced Diag > Elec Coat > EC Limit 1**

Set the criteria for the electrode coating limit 1 which indicates when coating is starting to occur, but has not compromised the flow measurement. The default value for this parameter is 1000 k Ohm.

Electrode coating (EC) level 2 limit

LOI menu path	**Diagnostics > Advanced Diag > Elec Coat > EC Limit 2**

Set the criteria for the electrode coating limit 2 which indicates when coating is affecting the flow measurement and the meter should be serviced immediately. The default value for this parameter is 2000 k Ohm.

Maximum electrode coating (EC)

LOI menu path	**Diagnostics > Advanced Diag > Elec Coat > EC Max Value**

The maximum electrode coating value reads the maximum value of the coated electrode detection diagnostic since the last maximum value reset.

Clear maximum electrode value

LOI menu path	**Diagnostics > Advanced Diag > Elec Coat > Reset Max Val**

Use this method to reset the maximum electrode coating value.

9.8 4-20 mA loop verification

The 4-20 mA loop verification diagnostic provides a means of verifying the analog output loop is functioning properly. This is a manually initiated diagnostic test. This diagnostic checks the integrity of the analog loop and provides a health status of the circuit. If the verification does not pass, this will be highlighted in the results given at the end of the check.

The 4-20 mA loop verification diagnostic is useful for testing the analog output when errors are suspected. The diagnostic tests the analog loop at five different mA output levels:

- 4 mA
- 12 mA
- 20 mA
- Low alarm level
- High alarm level

9.8.1 Initiating 4-20 mA loop verification

LOI menu path	**Diagnostics** > **Advanced Diag** > **4-20mA Verify** > **4-20mA Verify**

The 4-20 mA loop verification diagnostic can be initiated as required by the application. If the advanced diagnostics suite 2 (DA2 Option) was ordered, then the 4-20 mA loop verification diagnostic will be available. If DA2 was not ordered or licensed, this diagnostic is not available.

9.8.2 4-20 mA loop verification parameters

The 4-20 mA loop verification diagnostic has five read-only parameters plus an overall test result. It does not have any configurable parameters.

4-20 mA loop verification test result

LOI menu path	**Diagnostics** > **Advanced Diag** > **4-20mA Verify** > **View Results**

Shows the results of the 4-20 mA loop verification test as either passed or failed.

4 mA measurement

LOI menu path	N/A

Shows the measured value of the 4 mA loop verification test.

12 mA measurement

LOI menu path	N/A

Shows the measured value of the 12 mA loop verification test.

20 mA measurement

LOI menu path	N/A

Shows the measured value of the 20 mA loop verification test.

Low alarm measurement

LOI menu path	N/A

Shows the measured value of the low alarm verification test.

High alarm measurement

LOI menu path	N/A

Shows the measured value of the high alarm verification test.

9.9 SMART™ Meter Verification

The SMART Meter Verification diagnostic provides a means of verifying the flowmeter is within calibration without removing the sensor from the process. This diagnostic test provides a review of the transmitter and sensor's critical parameters as a means to document verification of calibration. The results of this diagnostic provide the deviation amount from expected values and a pass/fail summary against user-defined criteria for the application and conditions. The SMART Meter Verification diagnostic can be configured to run continuously in the background during normal operation, or it can be manually initiated as required by the application.

9.9.1 Sensor baseline (signature) parameters

The SMART Meter Verification diagnostic functions by taking a baseline sensor signature and then comparing measurements taken during the verification test to these baseline results.

The sensor signature describes the magnetic behavior of the sensor. Based on Faraday's law, the induced voltage measured on the electrodes is proportional to the magnetic field strength. Thus, any changes in the magnetic field will result in a calibration shift of the sensor. Having the transmitter take an initial sensor signature when first installed will provide the baseline for the verification tests that are done in the future. There are three specific measurements that are stored in the transmitter's non-volatile memory that are used when performing the calibration verification.

Coil circuit resistance

LOI menu path	**Diagnostics > Advanced Diag > Meter Verif > Sensr Baseline > Values > Coil Resist**

The coil circuit resistance is a measurement of the coil circuit health. This value is used as a baseline to determine if the coil circuit is still operating correctly.

Coil inductance (signature)

LOI menu path	**Diagnostics > Advanced Diag > Meter Verif > Sensr Baseline > Values > Coil Inductnce**

The coil inductance is a measurement of the magnetic field strength. This value is used as a baseline to determine if a sensor calibration shift has occurred.

Electrode circuit resistance

LOI menu path	**Diagnostics > Advanced Diag > Meter Verif > Sensr Baseline > Values > Electrode Res**

The electrode circuit resistance is a measurement of the electrode circuit health. This value is used as a baseline to determine if the electrode circuit is still operating correctly.

9.9.2 Establishing the sensor baseline (signature)

The first step in running the SMART Meter Verification test is establishing the reference signature that the test will use as the baseline for comparison. This is accomplished by having the transmitter take a signature of the sensor.

Reset baseline (re-signature meter)

LOI menu path	**Diagnostics > Advanced Diag > Meter Verif > Sensr Baseline > Reset Baseline**

Having the transmitter take an initial sensor signature when first installed will provide the baseline for the verification tests that are done in the future. The sensor signature should be taken during the start-up process when the transmitter is first connected to the sensor,

with a full line, and ideally with no flow in the line. Running the sensor signature procedure when there is flow in the line is permissible, but this may introduce some noise into the electrode circuit resistance measurement. If an empty pipe condition exists, then the sensor signature should only be run for the coils.

Once the sensor signature process is complete, the measurements taken during this procedure are stored in non-volatile memory to prevent loss in the event of a power interruption to the meter. This initial sensor signature is required for both manual and continuous SMART Meter Verification.

Recall values (recall last saved)

LOI menu path	**Diagnostics > Advanced Diag > Meter Verif > Sensr Baseline > Recall Values**

In the event that the sensor baseline was reset accidentally or incorrectly, this function will restore the previously saved sensor baseline values.

9.9.3 SMART Meter Verification test criteria

The Smart Meter Verification diagnostic provides the ability to customize the test criteria to which the verification must be tested. The test criteria can be set for each of the flow conditions discussed above.

No flow limit

LOI menu path	**Diagnostics > Advanced Diag > Meter Verif > Test Criteria > No Flow**

Set the test criteria for the no flow condition. The factory default for this value is set to five percent with limits configurable between one and ten percent. This parameter applies to manually initiated test only.

Flowing full limit

LOI menu path	**Diagnostics > Advanced Diag > Meter Verif > Test Criteria > Flowing, Full**

Set the test criteria for the flowing, full condition. The factory default for this value is set to five percent with limits configurable between one and ten percent. This parameter applies to manually initiated tests only.

Empty pipe limit

LOI menu path	**Diagnostics > Advanced Diag > Meter Verif > Test Criteria > Empty Pipe**

Set the test criteria for the empty pipe condition. The factory default for this value is set to five percent with limits configurable between one and ten percent. This parameter applies to manually initiated test only.

Continuous limit

LOI menu path	**Diagnostics** > **Advanced Diag** > **Meter Verif** > **Test Criteria** > **Continual**

Set the test criteria for the continuous SMART Meter Verification diagnostic. The factory default for this value is set to five percent with limits configurable between two and ten percent. If the tolerance band is set too tightly, under empty pipe conditions or noisy flowing conditions, a false failure of the transmitter test may occur.

9.10 Run manual SMART Meter Verification

LOI menu path	**Diagnostics** > **Advanced Diag** > **Meter Verif** > **Run Meter Ver**

The SMART Meter Verification diagnostic will be available if the advanced diagnostic suite (DA2) was ordered. If DA2 was not ordered or licensed, this diagnostic will not be available. This method will initiate the manual meter verification test.

9.10.1 Test conditions

LOI menu path	**Diagnostics** > **Advanced Diag** > **Meter Verif** > **Run Meter Ver** > **Test Condition**

SMART Meter Verification can be initiated under three possible test conditions. This parameter is set at the time that the sensor baseline or SMART Meter Verification test is manually initiated.

No flow

Run the SMART Meter Verification test with a full pipe and no flow in the line. Running the SMART Meter Verification test under this condition provides the most accurate results and the best indication of magnetic flowmeter health.

Flowing full

Run the SMART Meter Verification test with a full pipe and flow in the line. Running the SMART Meter Verification test under this condition provides the ability to verify the magnetic flowmeter health without shutting down the process flow in applications when a shutdown is not possible. Running the diagnostic under flowing conditions can cause a false test failure if there is significant process noise present.

Empty pipe

Run the SMART Meter Verification test with an empty pipe. Running the SMART Meter Verification test under this condition provides the ability to verify the magnetic flowmeter health with an empty pipe. Running the verification diagnostic under empty pipe conditions will not check the electrode circuit health.

9.10.2 Test scope

The manually initiated SMART Meter Verification test can be used to verify the entire flowmeter installation or individual parts such as the transmitter or sensor. This parameter is set at the time that the SMART Meter Verification test is manually initiated. There are three test scopes from which to choose.

LOI menu path	**Diagnostics** > **Advanced Diag** > **Meter Verif** > **Run Meter Ver** > **Test Scope**

All

Run the SMART Meter Verification test and verify the entire flowmeter installation. This parameter results in the diagnostic performing the transmitter calibration verification, sensor calibration verification, coil health check, and electrode health check. Transmitter calibration and sensor calibration are verified to the percentage associated with the test condition selected when the test was initiated. This setting applies to manually initiated tests only.

Transmitter

Run the SMART Meter Verification test on the transmitter only. This results in the verification test only checking the transmitter calibration to the limits of the test criteria selected when the verification test was initiated. This setting applies to manually initiated tests only.

Sensor

Run the SMART Meter Verification test on the sensor only. This results in the verification test checking the sensor calibration to the limits of the test criteria selected when the SMART Meter Verification test was initiated, verifying the coil circuit health, and the electrode circuit health. This setting applies to manually initiated tests only.

9.11 Continuous SMART Meter Verification

Continuous SMART Meter Verification can be used to monitor and verify the health of the flowmeter system. The continuous SMART Meter Verification will not report results until 30 minutes after powering up to ensure the system is stable and to avoid false failures.

9.11.1 Test scope

Continuous SMART Meter Verification can be configured to monitor the sensor coils, electrodes, and transmitter calibration, All of these parameters can be individually enabled or disabled. These parameters apply to continuous SMART Meter Verification only.

Coils

LOI menu path	**Diagnostics** > **Diag Controls** > **Cont Meter Ver** > **Coils**

Continuously monitor the sensor coil circuit by enabling this continuous SMART Meter Verification parameter.

Electrodes

LOI menu path	**Diagnostics** > **Diag Controls** > **Cont Meter Ver** > **Electrodes**

Continuously monitor the electrode resistance by enabling this continuous SMART Meter Verification parameter.

Transmitter

LOI menu path	**Diagnostics** > **Diag Controls** > **Cont Meter Ver** > **Transmitter**

Continuously monitor the transmitter calibration by enabling this continuous SMART Meter Verification parameter.

9.12 SMART Meter Verification test results

If the SMART Meter Verification test is manually initiated, the transmitter will make several measurements to verify the transmitter calibration, sensor calibration, coil circuit health, and electrode circuits health. The results of these tests can be reviewed and recorded on the *Table 9-3* form. Print the "Manual Calibration Verification Results" form and enter the test results as you view them. The completed form can be used to validate that the meter is within the required calibration limits to comply with governmental regulatory agencies.

Depending on the method used to view the results, they will be displayed in either a menu structure, as a method, or in the report format. When using the HART® Field Communicator, each individual parameter can be viewed as a menu item. When using the LOI, the parameters are viewed as a method using the left arrow key to cycle through the results. In AMS, the calibration verification report is populated with the necessary data eliminating the need to manually complete the form.

When using AMS there are two possible methods that can be used to print the report:

- Method one involves using the print functionality within the EDDL screen. This print functionality essentially prints a screen shot of the report.

- Method two involves using the print feature within AMS while on the Maintenance Service Tools screen. This will result in a printout of all of the maintenance information. Page one of the report contains the meter verification result data.

The results are displayed in the order found in the table below. Each parameter displays a value used by the diagnostic to evaluate meter health.

Table 9-3: Manual Smart Meter Verification Test Parameters

	Parameter	LOI menu path (**Diagnostics > Variables > MV Results > Manual Results**)
1	Test Condition	Test Condition
2	Test Criteria	Test Criteria
3	8714i Test Result	MV Results
4	Simulated Velocity	Sim Velocity
5	Actual Velocity	ActualVelocity
6	Velocity Deviation	Flow Sim Dev
7	Xmtr Cal Test Result	Xmtr Cal Verify
8	Sensor Cal Deviation	Sensor Cal Dev
9	Sensor Cal Test Result	Sensor Cal
10	Coil Circuit Test Result	Coil Circuit
11	Electrode Circuit Test Result	Electrode Ckt

Table 9-4: Continuous SMART Meter Verification Test Parameters

	Parameter	LOI menu path (**Diagnostics > Variables > MV Results > Continual Res**)
1	Continuous Limit	Test Criteria
2	Simulated Velocity	Sim Velocity
3	Actual Velocity	ActualVelocity
4	Velocity Deviation	Flow Sim Dev
5	Coil Signature	Coil Inductnce
6	Sensor Cal Deviation	Sensor Cal Dev
7	Coil Resistance	Coil Resist
8	Electrode Resistance	Electrode Res
9	mA Expected	4–20 mA Expect
10	mA Actual	4–20 mA Actual
11	mA Deviation	AO FB Dev

9.13 SMART Meter Verification measurements

The SMART Meter Verification test will make measurements of the coil resistance, coil signature, and electrode resistance and compare these values to the values taken during the sensor signature process to determine the sensor calibration deviation, the coil circuit health, and the electrode circuit health. In addition, the measurements taken by this test can provide additional information when troubleshooting the meter.

Coil circuit resistance

LOI menu path	Manual: **Diagnostics** > **Advanced Diag** > **Meter Verif** > **Measurements** > **Manual Measure** > **Coil Resist** Continuous: **Diagnostics** > **Advanced Diag** > **Meter Verif** > **Measurements** > **Continual Meas** > **Coil Resist**

The coil circuit resistance is a measurement of the coil circuit health. This value is compared to the coil circuit resistance baseline measurement taken during the sensor signature process to determine coil circuit health. This value can be continuously monitored using continuous SMART Meter Verification.

Coil signature

LOI menu path	Manual: **Diagnostics** > **Advanced Diag** > **Meter Verif** > **Measurements** > **Manual Measure** > **Coil Inductnce** Continuous: **Diagnostics** > **Advanced Diag** > **Meter Verif** > **Measurements** > **Continual Meas** > **Coil Inductnce**

The coil signature is a measurement of the magnetic field strength. This value is compared to the coil signature baseline measurement taken during the sensor signature process to determine sensor calibration deviation. This value can be continuously monitored using continuous SMART Meter Verification.

Electrode circuit resistance

LOI menu path	Manual: **Diagnostics** > **Advanced Diag** > **Meter Verif** > **Measurements** > **Manual Measure** > **Electrode Res** Continuous: **Diagnostics** > **Advanced Diag** > **Meter Verif** > **Measurements** > **Continual Meas** > **Electrode Res**

The electrode circuit resistance is a measurement of the electrode circuit health. This value is compared to the electrode circuit resistance baseline measurement taken during the sensor signature process to determine electrode circuit health. This value can be continuously monitored using continuous SMART Meter Verification.

Actual velocity

LOI menu path	Manual: **Diagnostics** > **Advanced Diag** > **Meter Verif** > **Measurements** > **Manual Measure** > **ActualVelocity** Continuous: **Diagnostics** > **Advanced Diag** > **Meter Verif** > **Measurements** > **Continual Meas** > **ActualVelocity**

The actual velocity is a measurement of the simulated velocity signal. This value is compared to the simulated velocity to determine transmitter calibration deviation. This value can be continuously monitored using continuous SMART Meter Verification.

Flow simulation deviation

LOI menu path	Manual: > **Diagnostics** > **Variables** > **MV Results** > **Manual Results** > **Flow Sim Dev** Continuous: > **Diagnostics** > **Variables** > **MV Results** > **Continual Res** > **Flow Sim Dev**

The flow simulation deviation is a measurement of the percent difference between the simulated velocity and the actual measured velocity from the transmitter calibration verification test. This value can be continuously monitored using continuous SMART Meter Verification.

9.14 Optimizing the SMART Meter Verification

The SMART Meter Verification diagnostic can be optimized by setting the test criteria to the desired levels necessary to meet the compliance requirements of the application. The following examples below will provide some guidance on how to set these levels.

An effluent meter must be certified annually to comply with environmental regulations. This example regulation requires that the meter be certified to five percent. Since this is an effluent meter, shutting down the process may not be viable. In this instance the SMART Meter Verification test will be performed under flowing conditions. Set the test criteria for flowing, full to five percent to meet the requirements of the governmental agencies.

A pharmaceutical company requires bi-annual verification of meter calibration on a critical feed line for one of their products. This is an internal standard, and the plant requires a calibration record be kept on-hand. Meter calibration on this process must meet two percent. The process is a batch process so it is possible to perform the calibration verification with the line full and with no flow. Since the SMART Meter Verification test can be run under no flow conditions, set the test criteria for no flow to two percent to comply with the necessary plant standards.

A food and beverage company requires an annual calibration of a meter on a product line. The plant standard calls for the accuracy to be three percent or better. They manufacture this product in batches, and the measurement cannot be interrupted when a batch is in

process. When the batch is complete, the line goes empty. Since there is no means of performing the SMART Meter Verification test while there is product in the line, the test must be performed under empty pipe conditions. The test criteria for empty pipe should be set to three percent, and it should be noted that the electrode circuit health cannot be verified.

For continuous SMART Meter Verification, there is only one test criteria value to configure, and it will be used for all flow conditions. The factory default is set to five percent to minimize the potential for false failures under empty pipe conditions. For best results, set the criteria to match the maximum value of the three test criteria set during manual meter verification (no flow, flowing full, and empty pipe). For example, a plant might set the following manual meter verification test criteria: two percent for no flow, three percent for flowing full, and four percent for empty pipe. In this case, the maximum test criterion is four percent, so the test criteria for continuous SMART Meter Verification should be set to four percent. If the tolerance band is set too tightly, under empty pipe conditions or noisy flowing conditions, a false failure of the transmitter test may occur.

9.14.1 Optimizing continuous SMART Meter Verification

For continuous SMART Meter Verification, there is only one test criteria value to configure, and it will be used for all flow conditions. The factory default is set to five percent to minimize the potential for false failures under empty pipe conditions. For best results, set the criteria to match the maximum value of the three test criteria set during manual meter verification (no flow, flowing full, and empty pipe).

For example, a plant might set the following manual meter verification test criteria: two percent for no flow, three percent for flowing full, and four percent for empty pipe. In this case, the maximum test criterion is four percent, so the test criteria for continuous SMART Meter Verification should be set to four percent. If the tolerance band is set too tightly, under empty pipe conditions or noisy flowing conditions, a false failure of the transmitter test may occur.

Manual Calibration Verification Results

Report parameters	
User Name: _____ _____	Calibration Conditions: ❑ Internal ❑ External
Tag #:_____ _____	Test Conditions: ❑ Flowing ❑ No Flow, Full Pipe ❑ Empty Pipe
Flowmeter information and configuration	
Software Tag:	
Calibration Number:	
Line Size:	PV Damping:_____ _____
Transmitter calibration verification results	Sensor calibration verification results
Simulated Velocity:	Sensor Deviation %:_____ _____
Actual Velocity:	Sensor Test: ❑ PASS / ❑ FAIL / ❑ NOT TESTED
Deviation %:	Coil Circuit Test: ❑ PASS / ❑ FAIL / ❑ NOT TESTED
Transmitter: ❑ PASS / ❑ FAIL / ❑ NOT TESTED	Electrode Circuit Test: ❑ PASS / ❑ FAIL / ❑ NOT TESTED
Summary of Calibration Verification results	
Verification Results: The result of the flowmeter verification test is: ❑ PASSED / ❑ FAILED	
Verification Criteria: This meter was verified to be functioning within _____ % of deviation from the original test parameters.	
Signature:_____ _____	Date:_____ _____

10 Digital Signal Processing

Topics covered in this chapter:

- *Introduction*
- *Safety messages*
- *Process noise profiles*
- *High process noise diagnostic*
- *Optimizing flow reading in noisy applications*
- *Explanation of signal processing algorithm*

10.1 Introduction

Magmeters are used in applications that can create noisy flow readings. The transmitter has the capability to deal with difficult applications that have previously manifested themselves in a noisy output signal. In addition to selecting a higher coil drive frequency (37 Hz vs. 5 Hz) to isolate the flow signal from the process noise, the microprocessor has digital signal processing that is capable of rejecting the noise specific to the application. This section explains the different types of process noise, provides instructions for optimizing the flow reading in noisy applications, and provides a detailed description of the digital signal processing functionality.

10.2 Safety messages

Instructions and procedures in this section may require special precautions to ensure the safety of the personnel performing the operations. Read the following safety messages before performing any operation described in this section.

⚠ WARNING!

Explosions could result in death or serious injury.

- **Verify the operating atmosphere of the sensor and transmitter is consistent with the appropriate hazardous locations certifications.**
- **Do not remove the transmitter cover in explosive atmospheres when the circuit is live.**
- **Both transmitter covers must be fully engaged to meet explosion-proof requirements.**

Failure to follow safe installation and servicing guidelines could result in death or serious injury.

- **Installation should be performed by qualified personnel only.**
- **Do not perform any service other than those contained in this manual.**
- **Process leaks may result in death or serious injury.**
- **The electrode compartment may contain line pressure; it must be depressurized before the cover is removed.**

High voltage that may be present on leads could cause electrical shock.

- **Avoid contact with leads and terminals.**

10.3 Process noise profiles

1/f noise

This type of noise has higher amplitudes at lower frequencies, but generally degrades over increasing frequencies. Potential sources of 1/f noise include chemical mixing and slurry flow particles rubbing against the electrodes.

Spike noise

This type of noise generally results in a high amplitude signal at specific frequencies which can vary depending on the source of the noise. Common sources of spike noise include chemical injections directly upstream of the flowmeter, hydraulic pumps, and slurry flows with low concentrations of particles in the stream. The particles bounce off of the electrode generating a “spike” in the electrode signal. An example of this type of flow stream would be a recycle flow in a paper mill.

White noise

This type of noise results in a high amplitude signal that is relatively constant over the frequency range. Common sources of white noise include chemical reactions or mixing that occurs as the fluid passes through the flowmeter and high concentration slurry flows where the particulates are constantly passing over the electrode head. An example of this type of flow stream would be a basis weight stream in a paper mill.

10.4 High process noise diagnostic

The transmitter continuously monitors signal amplitudes over a wide range of frequencies. For the high process noise diagnostic, the transmitter specifically looks at the signal amplitude at frequencies of 2.5 Hz, 7.5 Hz, 32.5 Hz, and 42.5 Hz. The transmitter uses the values from 2.5 and 7.5 Hz and calculates an average noise level. This average is compared to the amplitude of the signal at 5 Hz. If the signal amplitude is not 25 times greater than the noise level, and the coil drive frequency is set at 5 Hz, the high process noise diagnostic will trip indicating that the flow signal may be compromised. The transmitter performs the same analysis around the 37.5 Hz coil drive frequency using the 32.5 Hz and 42.5 Hz values to establish a noise level.

10.5 Optimizing flow reading in noisy applications

If the flow reading is unstable, first check the wiring, grounding, and process reference associated with the magnetic flowmeter system. Ensure that the following conditions are met:

- Ground straps are attached to the adjacent flange or ground ring
- Grounding rings, lining protectors, or a process reference electrode are being used in lined or non-conductive piping

The causes of unstable transmitter output can usually be traced to extraneous voltages on the measuring electrodes. This “process noise” can arise from several causes including electrochemical reactions between the fluid and the electrode, chemical reactions in the process itself, free ion activity in the fluid, or some other disturbance of the fluid/electrode capacitive layer. In such noisy applications, an analysis of the frequency spectrum reveals process noise that typically becomes significant below 15 Hz.

In some cases, the effects of process noise may be sharply reduced by elevating the coil drive frequency above the 15 Hz region. Coil drive mode is selectable between the standard 5 Hz and the noise-reducing 37 Hz.

10.5.1 Coil drive frequency

LOI menu path	**Detailed Setup** > **Additional Params** > **Coil Drive Freq**

This parameter changes the pulse rate of the magnetic coils.

5 Hz

The standard coil drive frequency is 5 Hz, which is sufficient for nearly all applications.

37 Hz

If the process fluid causes a noisy or unstable flow reading, increase the coil drive frequency to 37 Hz. If the 37 Hz mode is selected, perform the auto zero function for optimum performance.

10.5.2 Auto zero

LOI menu path	**Diagnostics** > **Trims** > **Auto Zero**

To ensure optimum accuracy when using 37 Hz coil drive mode, there is an auto zero function that should be initiated. When using 37 Hz coil drive mode it is important to zero the system for the specific application and installation.

The auto zero procedure should be performed only under the following conditions:

- With the transmitter and sensor installed in their final positions. This procedure is not applicable on the bench.
- With the transmitter in 37 Hz coil drive mode. Never attempt this procedure with the transmitter in 5 Hz coil drive mode.
- With the sensor full of process fluid at zero flow.

These conditions should cause an output equivalent to zero flow.

Set the loop to manual if necessary and begin the auto zero procedure. The transmitter completes the procedure automatically in about 90 seconds. A clock symbol will appear in the lower right-hand corner of the display to indicate that the procedure is running.

Note

Failure to complete an auto zero may result in a flow velocity error of 5 to10% at1 ft/s (0.3 m/s). While the output level will be offset by the error, the repeatability will not be affected.

10.5.3 Digital signal processing (DSP)

LOI menu path	**Detailed Setup** > **Signal Processing**

The transmitter contains several advanced functions that can be used to stabilize erratic outputs caused by process noise. The signal processing menu contains this functionality. If the 37 Hz coil drive frequency has been set, and the output is still unstable, the damping and signal processing function should be used. It is important to set the coil drive frequency to 37 Hz to increase the flow sampling rate. The transmitter provides an easy and straightforward start-up, and also incorporates the capability to deal with difficult applications that have previously manifested themselves in a noisy output signal. In addition to selecting a higher coil drive frequency (37 Hz vs. 5 Hz) to isolate the flow signal from the process noise, the microprocessor can scrutinize each input based on three user-defined parameters to reject the noise specific to the application.

Operating mode

LOI menu path	**Detailed Setup** > **Signal Processing** > **Operating Mode**

The operating mode should be used only when the signal is noisy and gives an unstable output. Filter mode automatically uses 37 Hz coil drive mode and activates signal processing at the factory set default values. When using filter mode, perform an auto zero with no flow and a full sensor. Either of the parameters, coil drive mode or signal processing, may still be changed individually. Turning signal processing off or changing the coil drive frequency to 5 Hz will automatically change the operating mode from filter mode to normal mode. This software technique, known as signal processing, “qualifies” individual flow signals based on historic flow information and three user-definable parameters, plus an on/off control. These parameters are described below.

Status

LOI menu path	**Detailed Setup > Signal Processing > Main Config DSP > Status**

Enable or disable the DSP capabilities. When ON is selected, the output is derived using a running average of the individual flow inputs. Signal processing is a software algorithm that examines the quality of the electrode signal against user-specified tolerances. The three parameters that make up signal processing (number of samples, maximum percent limit, and time limit) are described below.

Number of samples

LOI menu path	**Detailed Setup > Signal Processing > Main Config DSP > Samples**

The number of samples sets the amount of time that inputs are collected and used to calculate the average value. Each second is divided into tenths with the number of samples equaling the number of increments used to calculate the average. This parameter can be configured for an integer value between 1 and 125. The default value is 90 samples.

For example:

- A value of 1 averages the inputs over the past $^{1}/_{10}$ second
- A value of 10 averages the inputs over the past 1 second
- A value of 100 averages the inputs over the past 10 seconds
- A value of 125 averages the inputs over the past 12.5 seconds

Percent limit

LOI menu path	**Detailed Setup > Signal Processing > Main Config DSP > % Limit**

This parameter will set the tolerance band on either side of the running average, referring to percent deviation from the average. Values within the limit are accepted while value outside the limit are scrutinized to determine if they are a noise spike or an actual flow change. This parameter can be configured for an integer value between 0 and 100 percent. The default value is 2 percent.

Time limit

LOI menu path	**Detailed Setup** > **Signal Processing** > **Main Config DSP** > **Time Limit**

The time limit parameter forces the output and running average values to the new value of an actual flow rate change that is outside the percent limit boundaries. It thereby limits response time to flow changes to the time limit value rather than the length of the running average. If the number of samples selected is 100, then the response time of the system is 10 seconds. In some cases this may be unacceptable. Setting the time limit forces the transmitter to clear the value of the running average and re-establish the output and average at the new flow rate once the time limit has elapsed. This parameter limits the response time added to the loop. A suggested time limit value of two seconds is a good starting point for most applicable process fluids. This parameter can be configured for a value between 0.6 and 256 seconds. The default value is 2 seconds.

10.6 Explanation of signal processing algorithm

An example plotting flow rate versus time is given below to help visualize the signal processing algorithm.

Figure 10-1: Signal Processing Functionality

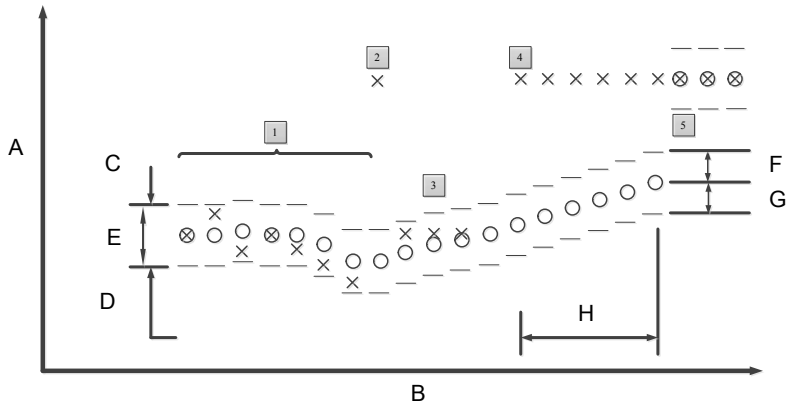

A. Flow rate
B. Time (10 samples = 1 second)
C. Upper value
D. Lower value
E. Tolerance band
F. Maximum percent limit
G. Minimum percent limit
H. Time limit

- *X = Input flow signal from sensor*
- *O = Average flow signals and transmitter output, determined by the number of samples parameter*
- *Tolerance band, determined by the percent limit parameter*
- *Upper value = average flow + [(percent limit/100) average flow]*
- *Lower value = average flow - [(percent limit/100) average flow]*

1. This scenario is that of a typical non-noisy flow. The input flow signal is within the percent limit tolerance band, therefore qualifying itself as a good input. In this case the new input is added directly into the running average and is passed on as a part of the average value to the output.
2. This signal is outside the tolerance band and therefore is held in memory until the next input can be evaluated. The running average is provided as the output.
3. The previous signal currently held in memory is simply rejected as a noise spike since the next flow input signal is back within the tolerance band. This results in complete rejection of noise spikes rather than allowing them to be “averaged” with the good signals as occurs in the typical circuits.
4. As in number 2 above, the input is outside the tolerance band. This first signal is held in memory and compared to the next signal. The next signal is also outside the tolerance band (in the same direction), so the stored value is added to the running average as the next input and the running average begins to slowly approach the new input level.

5. To avoid waiting for the slowly incrementing average value to catch up to the new level input, an algorithm is provided. This is the “time limit” parameter. The user can set this parameter to eliminate the slow ramping of the output toward the new input level.

11 Maintenance

Topics covered in this chapter:

- *Introduction*
- *Safety information*
- *Installing a Local Operator Interface (field mount)*
- *Installing a local operator interface (wall mount)*
- *Replacing electronics stack (field mount)*
- *Replacing electronics stack (wall mount)*
- *Replacing a socket module/terminal block*
- *Trims*
- *Review*

11.1 Introduction

This section covers basic transmitter maintenance. Instructions and procedures in this section may require special precautions to ensure the safety of the personnel performing the operations. Read the following safety messages before performing any operation described in this section. Refer to these warnings when appropriate throughout this section.

11.2 Safety information

⚠ WARNING!

Failure to follow these maintenance guidelines could result in death or serious injury.

- **Installation and servicing instructions should be performed by qualified personnel only.**
- **Do not perform any servicing other than that contained in the operating instructions.**
- **Verify the operating environment of the sensor and transmitter is consistent with the appropriate hazardous area approval.**
- **Do not connect the transmitter to a non-Rosemount sensor that is located in an explosive atmosphere.**
- **Mishandling products exposed to a hazardous substance may result in death or serious injury.**
- **If the product being returned was exposed to a hazardous substance as defined by OSHA, a copy of the required Material Safety Data Sheet (MSDS) for each hazardous substance identified must be included with the returned goods.**

11.3 Installing a Local Operator Interface (field mount)

Figure 11-1: Installing a Local Operator Interface (LOI)

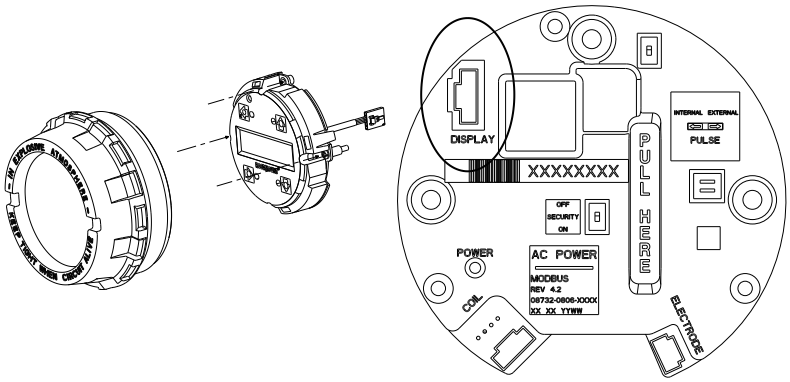

Procedure

1. If the transmitter is installed in a control loop, secure the loop.
2. Remove power from the transmitter.
3. Remove the cover on the electronics compartment of the transmitter housing. If the cover has a cover jam screw, loosen it before removing the cover.

   See *Section 5.1* for details on the cover jam screw.
4. On the electronics stack, locate the serial connection labeled “DISPLAY”.

   See *Figure 11-1*.
5. Plug the serial connector from the back of the LOI into the receptacle on the electronics stack.

   The LOI can be rotated in 90 degree increments to provide the best viewing position. Rotate the LOI to the desired orientation, taking care to not exceed 360 degrees of rotation. Exceeding 360 degrees of rotation could damage the LOI cable and/or connector.
6. Once the serial connector is installed on the electronics stack, and the LOI is oriented in the desired position, tighten the three mounting screws.
7. Install the extended cover with the glass viewing pane and tighten to metal-to-metal contact.

   If the cover has a cover jam screw, this must be tightened to comply with installation requirements. Return power to the transmitter and verify that it is functioning correctly and reporting the expected flow rate.
8. If installed in a control loop, return the loop to automatic control.

11.4 Installing a local operator interface (wall mount)

Figure 11-2: Rosemount 8712 cover assembly with LOI

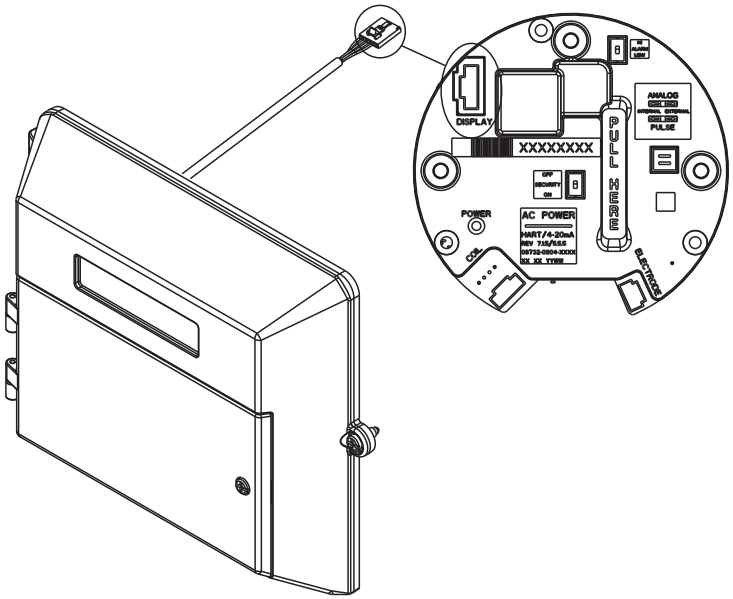

Procedure

1. If the transmitter is installed in a control loop, secure the loop.
2. Remove power from the transmitter.
3. Loosen the upper door screw and open the top electronics compartment of the transmitter housing.

> **Note**
> See *Section 4.4.6* for details on the covers.

4. Remove the existing blind door by lifting it up and away from the transmitter housing.
5. Align the new LOI door pins with the transmitter hinges and install the new door by pushing it down towards the transmitter housing.
6. Plug the serial connector from the back of the LOI into the receptacle on the electronics stack.
7. Once the serial connector is installed on the electronics stack, install the wire clamp around the cable, securely tighten the screw, washers, and wire clamp into the top left housing post of the transmitter housing.

8. Close the upper compartment door and tighten the upper door screw to ensure the housing is properly sealed to meet ingress protection requirements. Return power to the transmitter and verify that it is functioning correctly and reporting the expected flow rate.
9. If installed in a control loop, return the loop to automatic control.

11.5 Replacing electronics stack (field mount)

Figure 11-3: Transmitter Nameplate Location

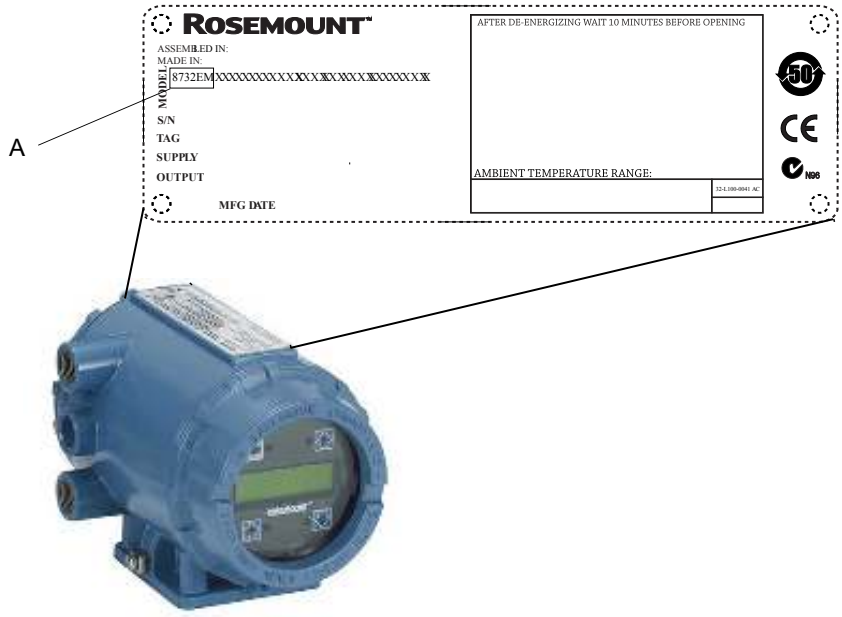

A. Verify model numbers

Figure 11-4: Transmitter Housing Electronics Board Identification

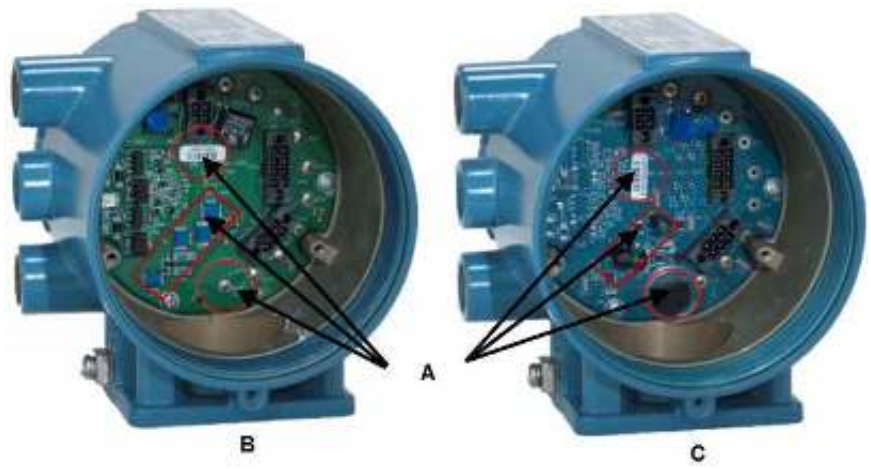

A. Key indicators
B. 8732EM housing (correct)
C. 8732ES housing (incorrect)

Figure 11-5: Electronics Stack Identification



A. 8732EM stack board
B. 8732ES electronics stack

Follow the steps below to confirm the transmitter housing is compatible with this electronics kit.

Prerequisites

Prior to installing the replacement electronics stack, it is important to verify that the transmitter housing you have is of the correct design to accept the Revision 4 electronics.

Procedure

1. Verify the model number is 8732EM. If the transmitter model is not 8732EM, then these electronics are not compatible.

   See *Figure 11-3* for the location of the model number. If the model is 8732C, 8742C, 8732ES, or some other model, then these electronics are not compatible with the enclosure. If you have one of these transmitters, a full replacement transmitter will be required. Consult the 8700M Product Data Sheet (00813-0100-4444) for details on ordering a new transmitter.
2. Verify the electronics board inside the housing is green and looks like the board pictured on the left in *Figure 11-4*.

   If the board is not green, or does not look like the board pictured, then the electronics are not compatible.
3. Confirm the electronics stack is for an 8732EM transmitter.

   Refer to the picture on the left in *Figure 11-5*.

11.6 Replacing electronics stack (wall mount)

Prerequisites

Verify the model number is correct. If the transmitter model is not correct, the replacement electronics are not compatible.

Procedure

1. If the transmitter is installed in a control loop, secure the loop.
2. Remove power from the transmitter.
3. Loosen the upper door screw and open the top electronics compartment of the transmitter housing. Note

Note
See *Section 4.4.6* for details on the covers.

4. If applicable, unplug the display connector from the top receptacle on the electronics stack.
5. Unplug the coil connector from the top receptacle on the electronics stack.
6. Unplug the electrode connector from the top receptacle on the electronics stack.
7. Remove the three screws that secure the electronics stack into the housing.
8. Remove the old electronics by pulling the electronics board stack handle directly away from the transmitter housing.

9. Remove the screws from the old electronics stack and insert them into the new electronics stack.
10. While holding onto the new electronics handle, align the electronics stack with the housing, and push the electronics stack into the housing.
11. Securely tighten the three electronic stack screws into the housing.
12. If applicable, plug the display connector into the display receptacle on the top of the electronics stack.
13. Plug the coil connector into the coil receptacle on the top of the electronics stack.
14. Plug the electrode connector into the electrode receptacle on the top of the electronics stack.
15. Close the upper compartment door and tighten the upper door screw to ensure the housing is properly sealed to meet ingress protection requirements. Return power to the transmitter and verify that it is functioning correctly and reporting the expected flow rate.
16. If installed in a control loop, return the loop to automatic control.

11.7 Replacing a socket module/terminal block

The socket module connects the sensor adapter to the transmitter. The socket module is a replaceable component.

To remove the socket module, loosen the two mounting screws and pull up on the socket module from the base. When removing the socket module, do not pull on the wires. See *Figure 11-6*.

Figure 11-6: Socket Module Warning

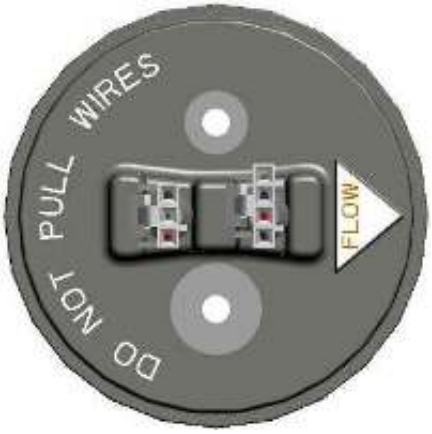

11.7.1 Replacing an integral mount socket module

Prerequisites

The integral mount socket module is shown in *Figure 11-7*. To gain access to the socket module, the transmitter must be removed from the sensor adapter.

Figure 11-7: Socket Module—Integral Mount



Removing an integral mount socket module

1. Disconnect power.
2. Remove electronics cover to gain access to the coil and electrode cables.
3. If the transmitter has an LOI, it will need to be removed to gain access to the coil and electrode cables.
4. Disconnect the coil and electrode cables.
5. Remove the four transmitter mounting screws.
6. Lift the transmitter off of the sensor adapter.
7. To remove the socket module, loosen the two mounting screws and pull up on the socket module from the base.
8. When removing the socket module, do not pull on the wires.

   See *Figure 11-6*.

Installing an integral mount socket module

1. To insert a new integral mount socket module, press the base into its keyed position and tighten the two mounting screws.
2. The coil and electrode cables are fed through the bottom opening of the transmitter and plugged into the face of the electronics.

3. The coil and electrode cables are keyed so they will only fit into their dedicated location.
4. If the transmitter has an LOI, it will need to be removed to access the coil and electrode ports.
5. Once the connections are made, the transmitter can be secured to the sensor adapter using the four mounting bolts.

11.7.2 Replacing a terminal block socket module

Prerequisites

The terminal block socket module is shown in *Figure 11-8*. To gain access to the socket module, remove the junction box from the sensor adapter.

Figure 11-8: Socket Module—Terminal Block

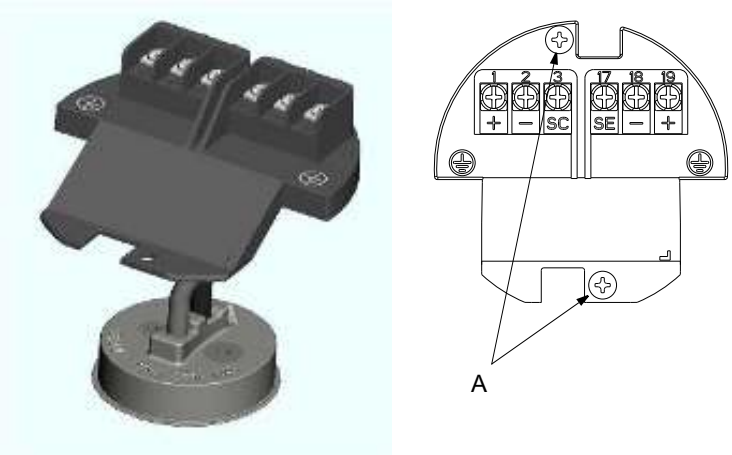

A. Mounting screws:
- *2X—standard*
- *4X—with I.S. divider*

Removing a terminal block socket module

1. Disconnect power to the transmitter and the remote cabling connected to the terminal block.
2. Remove the junction box cover to gain access to the remote cabling.
3. To disconnect the terminal block from the junction box housing, remove the two mounting screws and the two divider mounting screws (if applicable).
4. Pull up on the terminal block to expose the socket module base.
5. To remove the socket module, loosen the two mounting screws and pull up on the socket module from the base.

6. When removing the socket module, do not pull on the wires.

Installing a terminal block socket module

1. Insert the new terminal block socket module, press the base into its keyed position, and tighten the two mounting screws.
2. Connect the terminal block to the junction box housing by tightening the two mounting screws.

   Install the divider with the two mounting screws if applicable.
3. Reconnect remote cabling and power and replace junction box cover.

11.7.3 Replacing a terminal block with amp clips

Figure 11-9: Terminal block with amp clips

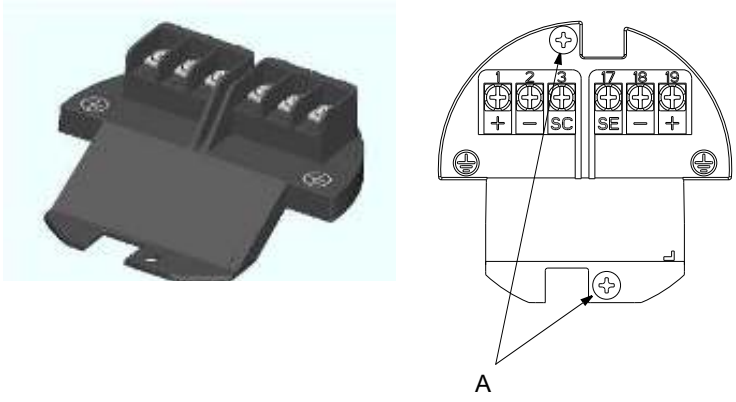

A. Mounting screws:
- *2X—standard*
- *4X—with I.S. divider*

Removing a terminal block

1. Disconnect power to the transmitter.
2. Remove the junction box cover on the sensor to gain access to the remote cabling and disconnect the remote cabling connected to the terminal block.
3. To disconnect the terminal block from the junction box housing, remove the two mounting screws and the two divider mounting screws (if applicable).
4. Pull up on the terminal block to expose the connecting wires.
5. To remove the terminal block, unclip both wire connectors.

Installing a terminal block

1. Clip the connecting wires to the back of the terminal block, the clips are different sizes and must be connected to their matching receptacle.
2. Connect the terminal block to the junction box housing by tightening the two mounting screws. Install the divider with the two mounting screws if applicable.
3. Reconnect remote cabling, replace the junction box cover on the sensor, and connect power.

11.8 Trims

Trims are used to calibrate the transmitter, re-zero the transmitter, and calibrate the transmitter with another manufacturer's sensor. Proceed with caution whenever performing a trim function.

11.8.1 D/A trim

LOI menu path	**Diagnostics** > **Trims** > **D/A Trim**

The D/A trim is used to calibrate the 4-20mA analog loop output from the transmitter. For maximum accuracy, the analog output should be trimmed for your system loop. Use the following steps to complete the output trim function.

Procedure

1. Set the loop to manual, if necessary.
2. Connect a precision ammeter in the 4-20mA loop.
3. Initiate the D/A trim function with the LOI or Handheld Communicator.
4. Enter the 4mA meter value when prompted.
5. Enter the 20mA meter value when prompted.
6. Return the loop to automatic control, if necessary.

The 4-20mA trim is now complete. The D/A trim can be repeated to check the results. Alternatively, the analog output test can also be used to verify loop performance.

11.8.2 Scaled D/A trim

A scaled D/A trim enables calibration of the flowmeter analog output using a different scale than the standard 4-20mA output scale. Non-scaled D/A trimming (described above), is typically performed using an ammeter where calibration values are entered in units of milliamperes. Scaled D/A trimming enables trimming of the flowmeter using a scale that may be more convenient based upon the method of measurement.

For example, it may be more convenient to make current measurements by direct voltage readings across the loop resistor. If the loop resistor is 500 ohms, and calibration of the meter will be done using voltage measurements across this resistor, the trim points can be rescaled from 4-20mA to 4-20mA x 500 ohm or 2-10VDC. Once the scaled trim points have been entered as 2 and 10, calibration of the flowmeter can be done by entering voltage measurements directly from the voltmeter.

11.8.3 Digital trim

LOI menu path	**Diagnostics** > **Trims** > **Digital Trim**

Digital trim is the function by which the factory calibrates the transmitter. This procedure is rarely needed by users. It is only necessary if the transmitter is suspected to be no longer accurate. A Rosemount 8714D Calibration Standard is required to complete a digital trim. Attempting a digital trim without a Rosemount 8714D Calibration Standard may result in an inaccurate transmitter or an error message. The digital trim must be performed with the coil drive mode set to 5Hz and with a nominal sensor calibration number stored in the memory.

Note

Attempting a digital trim without a Rosemount 8714D Calibration Standard may result in an inaccurate transmitter, or a "DIGITAL TRIM FAILURE" message may appear. If this message occurs, no values were changed in the transmitter. Simply cycle power on the transmitter to clear the message.

To simulate a nominal sensor with the Rosemount 8714D Calibration Standard, change/verify the following five parameters in the transmitter:

- Calibration Number-1000015010000000
- Units-ft/s
- PV URV-20mA = 30.00 ft/s
- PV LRV-4mA = 0 ft/s
- Coil Drive Frequency-5Hz

Before changing any of the configuration parameters, be sure to record the original values so that the transmitter can be returned to the original configuration prior to being placed back into operation. Failure to return the settings to the original configuration will result in incorrect flow and totalizer readings.

The instructions for changing the calibration number, units, PV URV, and PV LRV are located in . Instructions for changing the coil drive frequency can be found on *Section 8.5.1*.

Set the loop to manual (if necessary) and then complete the following steps:

Procedure

1. Power down the transmitter.
2. Connect the transmitter to a Rosemount 8714D Calibration Standard.

3. Power up the transmitter with the Rosemount 8714D connected and read the flow rate.

   The electronics need about a 5-minute warm-up time to stabilize.
4. Set the 8714D Calibration Standard to the 30 ft/s (9.1 m/s) setting.
5. The flow rate reading after warm-up should be between 29.97 (9.1 m/s) and 30.03 ft/s (9.2 m/s).
6. If the reading is within the range, return the transmitter to the original configuration parameters.
7. If the reading is not within this range, initiate a digital trim with the LOI or Handheld Communicator.

   The digital trim takes about 90 seconds to complete. No transmitter adjustments are required.

11.8.4 Universal trim

LOI menu path	**Diagnostics** > **Trims** > **Universal Trim**

The universal auto trim function enables the transmitter to calibrate sensors that were not calibrated at the factory. The function is activated as one step in a procedure known as in-process calibration. If a sensor has a 16-digit calibration number, in-process calibration is not required. If it does not, or if the sensor is made by another manufacturer, complete the following steps for in-process calibration. Refer to *Implementing a Universal Transmitter*.

Procedure

Determine the flow rate of the process fluid in the sensor.

Note

The flow rate in the line can be determined by using another sensor in the line, by counting the revolutions of a centrifugal pump, or by performing a bucket test to determine how fast a given volume is filled by the process fluid.

When the routine is completed, the sensor is ready for use.

11.9 Review

LOI menu path	**Device Setup** > **Review**

The transmitter includes a capability to review the configuration variable settings.

The flowmeter configuration parameters set at the factory should be reviewed to ensure accuracy and compatibility with the particular application of the flowmeter.

Note

If the LOI is used to review variables, each variable must be accessed as if changing its setting. The value displayed on the LOI screen is the configured value of the variable.

12 Troubleshooting

Topics covered in this chapter:

- *Introduction*
- *Safety information*
- *Installation check and guide*
- *Diagnostic messages*
- *Basic troubleshooting*
- *Sensor troubleshooting*
- *Installed sensor tests*
- *Uninstalled sensor tests*
- *Technical support*
- *Service*

12.1 Introduction

This section covers basic transmitter and sensor troubleshooting. Problems in the magnetic flowmeter system are usually indicated by incorrect output readings from the system, error messages, or failed tests. Consider all sources when identifying a problem in the system. If the problem persists, consult the local Rosemount representative to determine if the material should be returned to the factory. Emerson offers several diagnostics that aid in the troubleshooting process. Instructions and procedures in this section may require special precautions to ensure the safety of the personnel performing the operations. Read the following safety messages before performing any operation described in this section. Refer to these warnings when appropriate throughout this section.

The transmitter performs self-diagnostics on the entire magnetic flowmeter system: the transmitter, the sensor, and the interconnecting wiring. By sequentially troubleshooting each individual piece of the magmeter system, it becomes easier to identify the problem and make the appropriate adjustments.

If there are problems with a new magmeter installation, see *Section 12.3* below for a quick guide to solve the most common installation problems. For existing magmeter installations, lists the most common magmeter problems and corrective actions.

12.2 Safety information

⚠ WARNING!

Failure to follow these troubleshotting guidelines could result in death or serious injury.

- **Installation and servicing instructions should be performed by qualified personnel only.**
- **Do not perform any servicing other than that contained in the operating instructions.**
- **Verify that the operating environment of the sensor and transmitter is consistent with the appropriate hazardous area approval.**
- **Do not connect the transmitter to a non-Rosemount sensor that is located in an explosive atmosphere.**
- **Mishandling products exposed to a hazardous substance may result in death or serious injury.**
- **If the product being returned was exposed to a hazardous substance as defined by OSHA, a copy of the required Material Safety Data Sheet (MSDS) for each hazardous substance identified must be included with the returned goods.**

12.3 Installation check and guide

Use this guide to check new installations of Rosemount magnetic flowmeter systems that appear to malfunction.

12.3.1 Transmitter

Checking the transmitter before applying power

Prerequisites

Before applying power to the magnetic flowmeter system, make the following transmitter checks:

Procedure

1. Record the transmitter model number and serial number.
2. Visually inspect the transmitter for any damage including the terminal block.
3. Verify the proper wiring connections have been made for the power and outputs.

Checking the transmitter after applying power

Prerequisites

Apply power to the magnetic flowmeter system before making the following transmitter checks:

Procedure

1. Check for an active error message or status alert. Refer to *Section 12.4*.
2. Verify the correct sensor calibration number is entered in the transmitter.

   The calibration number is listed on the sensor nameplate.
3. Verify the correct sensor line size is entered in the transmitter.

   The line size value is listed on the sensor nameplate.
4. If desired, use a Rosemount 8714D to verify the transmitter calibration.

12.3.2 Sensor

Prerequisites

Be sure that power to magnetic flowmeter system is removed before beginning the following sensor checks:

Procedure

1. Record the sensor model number and serial number.
2. Visually inspect the sensor for any damage including inside the remote junction box, if applicable.
3. For horizontal flow installations, ensure that the electrodes remain covered by process fluid.

   For vertical or inclined installations, ensure that the process fluid is flowing up into the sensor to keep the electrodes covered by process fluid.
4. Verify the flow arrow is pointing in the same direction as forward flow.
5. Ensure the grounding straps on the sensor are connected to grounding rings, lining protectors, or the adjacent pipe flanges. Improper grounding will cause erratic operation of the system.

   Sensors with a ground electrode will not require the grounding straps to be connected.

12.3.3 Remote wiring

1. The electrode signal and coil drive wires must be separate cables, unless Rosemount specified combo cable is used.

   See *Section 4.4.3*.
2. The electrode signal wire and coil drive wire must be twisted shielded cable. Rosemount recommends 20 AWG twisted shielded cable for the electrode signal and 14 AWG twisted shielded cable for the coil drive.

   See *Section 4.4.3*.
3. See *Appendix B* regarding wiring installation requirements.
4. See *Appendix C* for component and/or combination cable wiring.

5. Verify there is minimal exposed wiring and shielding.

   Less than 1 inch (25 mm) is recommended.

6. Verify that the single conduit that houses both the electrode signal and coil drive cables do not contain any other wires, including wires from other magmeters.

Note

For installations requiring intrinsically safe electrodes, the signal and coil drive cables must be run in Individual conduits.

12.3.4 Process fluid

1. The process fluid should have a minimum conductivity of 5 microSiemens/cm (5 micro mhos/cm).
2. The process fluid must be free of air and gas.
3. The sensor must be full of process fluid.
4. The process fluid must be compatible with the wetted materials - liner, electrodes, ground rings, and lining protectors.

   Refer to the *Rosemount® Magnetic Flowmeter Material Selection Guide (00816-0100-3033)* Technical Note for details.

5. If the process is electrolytic or has cathodic protection, refer to the *Installation and Grounding of Magmeters in Typical and Special Applications (00840-2400-4727)* Technical Note for special installation requirements.

12.4 Diagnostic messages

Problems in the magnetic flowmeter system are usually indicated by incorrect output readings from the system, error messages, or failed tests. Consider all sources in identifying a problem in the system.

Table 12-1: Basic Diagnostic Messages

Error message	Potential cause	Corrective action
Empty Pipe	Empty pipe	None - message will clear when pipe is full
	Wiring error	Check that wiring matches appropriate wiring diagrams
	Electrode error	Perform sensor tests - see *Section 12.7*
	Conductivity less than 5 microSiemens per cm	Increase conductivity to greater than or equal to 5 microSiemens per cm
	Intermittent diagnostic	Adjust tuning of empty pipe parameters - see *Section 12.4.1*
Coil Open Circuit	Improper wiring	Check coil drive wiring and sensor coils. Perform sensor tests - see *Section 12.7*

Table 12-1: Basic Diagnostic Messages *(continued)*

Error message	Potential cause	Corrective action
	Other manufacturer's sensor	Change coil current to 75 mA - set calibration numbers to 10000550100000030
		Perform a universal auto-trim to select the proper coil current
	Electronics board failure	Replace electronics stack
	Coil circuit open fuse	Return the unit to the factory for fuse replacement
Auto Zero Failure	Flow is not set to zero	Force flow to zero, perform auto zero trim
	Unshielded cable in use	Change wire to shielded cable
	Moisture problems	See *Section 12.7*
Auto-Trim Failure	No flow in pipe while performing Universal Auto Trim	Establish a known flow rate, and perform universal auto-trim calibration
	Wiring error	Check that wiring matches appropriate wiring diagrams
	Flow rate is changing in pipe while performing Universal Auto-Trim routine	Establish a constant flow rate, and perform universal auto-trim calibration
	Flow rate through sensor is significantly different than value entered during Universal Auto-Trim routine	Verify flow in sensor and perform universal auto-trim calibration
	Incorrect calibration number entered into transmitter for Universal Auto-Trim routine	Replace sensor calibration number with 1000005010000000
	Wrong sensor size selected	Correct sensor size setting - see
	Sensor failure	Perform sensor tests - see *Section 12.7*
Electronics Failure	Electronics self check failure	Cycle power to see if diagnostic message clears
		Replace Electronics stack
Electronics Temp Fail	Ambient temperature exceeded the electronics temperature limits	Move transmitter to a location with an ambient temperature range of -40 to 140 °F (-40 to 60 °C)
Reverse Flow	Electrode or coil wires reverse	Verify wiring between sensor and transmitter
	Flow is reverse	Turn ON Reverse Flow Enable to read flow
	Sensor installed backwards	Install sensor correctly, or switch either the electrode wires (18 and 19) or the coil wires (1 and 2)
PZR Activated (Positive Zero Return)		Remove voltage to turn PZR off
Pulse Out of Range	The transmitter is trying to generate a frequency greater than allowed	Standard pulse - increase pulse scaling to prevent pulse output from exceeding 11,000 Hz
		Intrinsically safe pulse - Increase pulse scaling to prevent pulse output from exceeding 5,500 Hz
		Pulse output is in fixed pulse mode and is trying to generate a frequency greater than the pulse width can support - see *Section 8.2.2*

Table 12-1: Basic Diagnostic Messages *(continued)*

Error message	Potential cause	Corrective action
		Verify the sensor calibration number and line size are correctly entered in the electronics
Flowrate > 43 ft/sec	Flow rate is greater than 43 ft/sec	Lower flow velocity, increase pipe diameter
	Improper wiring	Check coil drive wiring and sensor coils
		Perform sensor tests - see *Section 12.7*
Digital Trim Failure (Cycle power to clear messages, no changes were made)	The calibrator (8714B/C/D) is not connected properly	Review calibrator connections
	Incorrect calibration number entered into transmitter	Replace sensor calibration number with 1000015010000000
	Calibrator is not set to 30 FPS	Change calibrator setting to 30 FPS
	Bad calibrator or calibrator cable	Replace calibrator and/or calibrator cable
Coil Over Current	Improper wiring	Check coil drive wiring and sensor coilsPerform sensor tests - see *Section 12.7*
	Transmitter failure	Replace the electronics stack
Electrode Saturation	Improper wiring	See *Section 4.4*
	Improper process reference	See *Section 3.4*
	Improper earth grounding	Verify earth ground connections - see *Section 4.4*
	Application requires special transmitter	Replace transmitter with transmitter that includes special option F0100

Table 12-2: Advanced Process Diagnostic Messages

Error message	Potential cause	Corrective action
Grounding/Wiring Fault	Improper installation of wiring	See *Section 4.4*
	Coil/electrode shield not connected	See *Section 4.4*
	Improper process grounding	See *Section 3.4*
	Faulty ground connection	Check wiring for corrosion, moisture in the terminal block -see *Section 3.4*
	Sensor not full	Verify sensor is full
		Enable empty pipe detection
High Process Noise	Slurry flows - mining/pulp stock	Decrease the flow rate below 10 ft/s (3 m/s)
		Complete the possible solutions listed under *Section 12.4.3*
	Chemical additives upstream of the sensor	Move injection point downstream of the sensor or move the sensor to a new location
		Complete the possible solutions listed under *Section 12.4.3*
	Electrode not compatible with the process fluid	Refer to the *Rosemount® Magnetic Flowmeter Material Selection Guide (00816-0100-3033)*

Table 12-2: Advanced Process Diagnostic Messages *(continued)*

Error message	Potential cause	Corrective action
	Gas/air in line	Move the sensor to another location in the process line to ensure that it is full under all conditions
	Electrode coating	Enable coated electrode etection diagnostic
		Use bullet-nose electrodes
		Downsize sensor to increase flowrate above 3 ft/s (1 m/s)
		Periodically clean sensor
	Styrofoam or other insulating particles	Complete the possible solutions listed under *Section 12.4.3*
		Consult factory
	Low conductivity fluids (below 10 microsiemens/cm)	Trim electrode and coil wires - see *Chapter 3*
		Use integral mount transmitter
		Set coil drive frequency to 37Hz
Electrode Coating Level 1	Coating is starting to buildup on electrode and interfering with measurement signal	Schedule maintenance to clean electrode
		Use bullet nose electrodes
		Downsize sensor to increase flow rate above 3ft/s (1ms)
	Process fluid conductivity has changed	Verify process fluid conductivity
Electrode Coating Level 2	Coating has built-up on electrode and is interfering with measurement signal	Schedule maintenance to clean electrode
		Use bullet nose electrodes
		Downsize sensor to increase flow rate above 3ft/s (1ms)
	Process fluid conductivity has changed	Verify process fluid conductivity

Table 12-3: Advanced Meter Verification Messages

Error message	Potential cause	Corrective action
8714i Failed	Transmitter calibration verification test failed	Verify pass/fail criteria
		Rerun SMART™ Meter Verification (8714i) under no flow conditions
		Verify calibration using 8714 Calibration Standard
		Perform digital trim
		Replace electronics board
	Sensor calibration test failed	Verify pass/fail criteria
		Rerun SMART Meter Verification (8714i)
		Perform sensor tests - see *Section 12.7*
	Sensor coil circuit test failed	Verify pass/fail criteria

Table 12-3: Advanced Meter Verification Messages *(continued)*

Error message	Potential cause	Corrective action
		Rerun SMART Meter Verification (8714i)
		Perform sensor tests - see *Section 12.7*
	Sensor electrode circuit test failed	Verify electrode resistance has a baseline (signature) value from a full pipe baseline
		Verify test condition was selected properly
		Verify pass/fail criteria
		Rerun SMART Meter Verification (8714i)
		Perform sensor tests - see *Section 12.7*
Continuous Meter Verification Error	Transmitter calibration verification test failed	Verify pass/fail criteria
		Run manual SMART Meter Verification (8714i) under no flow conditions
		Verify calibration using 8714D Calibration Standard
		Perform digital trim
		Replace electronics stack
	Sensor calibration test failed	Run manual SMART Meter Verification (8714i)
		Perform sensor tests - see *Section 12.7*
	Sensor coil circuit test failed	Run manual SMART Meter Verification (8714i)
		Perform sensor tests - see *Section 12.7*
	Sensor electrode circuit test failed	Run manual SMART Meter Verification (8714i)
		Perform sensor tests - see *Section 12.7*
		Verify electrode resistance has a signature value from a full pipe baseline
Simulated Velocity Out of Spec	Unstable flow rate during the verification test or noisy process	Run manual transmitter verification test with no flow and a full pipe
	Transmitter drift or faulty electronics	Verify transmitter electronics with 8714D Calibration Standard. The dial on the 8714D should be set to 30 ft/s (9.14 m/s). The transmitter should be set up with the nominal calibration number (1000015010000000) and 5 Hz coil drive frequency.
		Perform an electronics trim using the 8714
		If the electronics trim doesn't correct the issue, replace the electronics
Coil Resistance Out of Spec	Moisture in the terminal block of the sensor or shorted coil	Perform sensor tests - see *Section 12.7*
		If the problem persists, replace the sensor
Coil Signature Out of Spec	Moisture in the terminal block of the sensor or shorted coil	Perform sensor tests - see *Section 12.7*
		If the problem persists, replace the sensor
	Calibration shift caused by heat cycling or vibration	Perform sensor tests - see *Section 12.7*

Table 12-3: Advanced Meter Verification Messages *(continued)*

Error message	Potential cause	Corrective action
		If the problem persists, replace the sensor
Electrode Resistance Out of Spec	Moisture in the terminal block of the sensor	Perform sensor tests - see *Section 12.7*
		If the problem persists, replace the sensor
	Electrode coating	Enable coated electrode detection diagnostic
		Use bullet-nose electrodes
		Downsize sensor to increases flowrate above 3 ft/s (1 m/s)
		Periodically clean sensor
	Shorted electrodes	Perform sensor tests - see *Section 12.7*
		If the problem persists, replace the sensor

12.4.1 Troubleshooting empty pipe

The following actions can be taken if empty pipe detection is unexpected:

Procedure

1. Verify the sensor is full.
2. Verify the sensor has not been installed with a measurement electrode at the top of the pipe.
3. Decrease the sensitivity by setting the empty pipe trigger level to a value of at least 20 counts above the empty pipe value read with a full pipe.
4. Decrease the sensitivity by increasing the empty pipe counts to compensate for process noise. The empty pipe counts is the number of consecutive empty pipe value readings above the empty pipe trigger level required to set the empty pipe diagnostic. The count range is 2-50, factory default set at 5.
5. Increase process fluid conductivity above 50 microsiemens/cm.
6. Properly connect the wiring between the sensor and the transmitter. Corresponding terminal block numbers in the sensor and transmitter must be connected.
7. Perform the sensor electrical resistance tests. For more detailed information, consult *Section 12.7*.

12.4.2 Troubleshooting ground/wiring fault

If transmitter detects high levels (greater than 5mV) 50/60 Hz noise caused by improper wiring or poor process grounding:

Procedure

1. Verify the transmitter is earth grounded.
2. Connect ground rings, grounding electrode, lining protector, or grounding straps. Grounding diagrams can be found in *Section 3.4*.

3. Verify the sensor is full.
4. Verify wiring between sensor and transmitter is prepared properly. Shielding should be stripped back less than 1 inch (25 mm).
5. Use separate shielded twisted pairs for wiring between sensor and transmitter.
6. Properly connect the wiring between the sensor and the transmitter. Corresponding terminal block numbers in the sensor and transmitter must be connected.

12.4.3 Troubleshooting high process noise

Note

In applications where very high levels of noise are a concern, it is recommended that a dual-calibrated Rosemount High-Signal 8707 sensor be used. These sensors can be calibrated to run at lower coil drive current supplied by the standard Rosemount transmitters, but can also be upgraded by changing to the 8712H High-Signal transmitter.

1/f noise

This type of noise has higher amplitudes at lower frequencies, but generally degrades over increasing frequencies. Potential sources of 1/f noise include chemical mixing and slurry flow particles rubbing against the electrodes. This type of noise can be mitigated by switching to the 37Hz coil drive frequency.

Spike noise

This type of noise generally results in a high amplitude signal at specific frequencies which can vary depending on the source of the noise. Common sources of spike noise include chemical injections directly upstream of the flowmeter, hydraulic pumps, and slurry flows with low concentrations of particles in the stream. The particles bounce off of the electrode generating a “spike” in the electrode signal. An example of this type of flow stream would be a recycle flow in a paper mill. The type of noise can be mitigated by switching to the 37Hz coil drive frequency and enabling the digital signal processing.

White noise

This type of noise results in a high amplitude signal that is relatively constant over the frequency range. Common sources of white noise include chemical reactions or mixing that occurs as the fluid passes through the flowmeter and high concentration slurry flows where the particulates are constantly passing over the electrode head. An example of this type of flow stream would be a basis weight stream in a paper mill. This type of noise can be mitigated by switching to the 37Hz coil drive frequency and enabling the digital signal processing.

Noise ratio less than 25 in 5 Hz mode

The transmitter detected high levels of process noise. If the signal to noise ratio is less than 25 while operating in 5 Hz mode, proceed with the following steps:

Procedure

1. Increase transmitter coil drive frequency to 37 Hz (refer to *Section 10.5.1* and, if possible, perform auto zero function *Section 10.5.2*).
2. Verify sensor is electrically connected to the process with process reference electrode, grounding rings with grounding straps, or lining protector with grounding straps.
3. If possible, redirect chemical additions downstream of the magmeter.
4. Verify process fluid conductivity is above 10 microSiemens/cm.

Noise ratio less than 25 in 37 Hz mode

If the signal to noise ratio is less than 25 while operating in 37 Hz mode, proceed with the following steps:

Procedure

1. Turn on the Digital Signal Processing (DSP) technology and follow the setup procedure (see *Chapter 10*).

   This will minimize the level of damping in the flow measurement and control loop while also stabilizing the reading to minimize valve actuation.
2. Increase damping to stabilize the signal (refer to *Section 8.5.5*).

   This will add response time to the control loop.
3. Move to a Rosemount High-Signal flowmeter system.

   This flowmeter will deliver a stable signal by increasing the amplitude of the flow signal by ten times to increase the signal to noise ratio. For example if the signal to noise ratio (SNR) of a standard magmeter is 5, the High-Signal would have a SNR of 50 in the same application. The Rosemount High-Signal system is comprised of the 8707 sensor which has modified coils and magnetics and the 8712H High-Signal transmitter.

12.4.4 Troubleshooting coated electrode detection

In the event that electrode coating is detected, use the following table to determine the appropriate course of action.

Table 12-4: Troubleshooting the Electrode Coating Diagnostic

Error message	Potential causes of error	Steps to correct
Electrode Coating Level 1	• Insulating coating is starting to build up on the electrode and may interfere with the flow measurement signal • Process fluid conductivity has decreased to a level close to operational limits of the meter	• Verify process fluid conductivity • Schedule maintenance to clean the electrodes • Use bullet nose electrodes • Replace the meter with a smaller diameter meter to increase the flow velocity to above 3 ft/s (1 m/s)
Electrode Coating Level 2	• Insulating coating has built up on the electrodes and is interfering with the flow measurement signal • Process fluid conductivity has decreased to a level below the operational limits of the meter	• Verify process fluid conductivity • Schedule maintenance to clean the electrodes • Use bullet nose electrodes • Replace the meter with a smaller diameter meter to increase the flow velocity to above 3 ft/s (1 m/s)

12.4.5 Troubleshooting 4-20 mA loop verification

In the event that the 4-20 mA Loop Verification fails, use the following table to determine the appropriate course of action.

Table 12-5: Troubleshooting the Analog Loop Verification Diagnostic

Test	Potential cause	Corrective action
4-20 mA Loop Verification Failure	Analog loop not powered	Check analog loop wiring
		Check loop resistance
		Check analog loop power switch – see *Section 6.1.3*
		Check external supply voltage to the transmitter
		Check for parallel paths in the current loop
	Analog drift	Perform D/A trim
	Transmitter failure	Perform transmitter self-test
		Perform manual analog loop test
		Replace the electronics stack

12.4.6 Troubleshooting the SMART Meter Verification test

If the SMART Meter Verification test fails, use the following table to determine the appropriate course of action. Begin by reviewing the SMART Meter Verification results to determine the specific test that failed.

Table 12-6: Troubleshooting the SMART Meter Verification Diagnostic

Test	Potential cause	Corrective action
Transmitter Verification Test	• Unstable flow reading during the test • Noise in the process • Transmitter drift • Faulty electronics	• Rerun SMART Meter Verification (8714i) under No Flow conditions • Check the transmitter calibration with the 8714D Calibration Standard • Perform a digital trim • Replace the electronics stack
Sensor Calibration Verification	• Moisture in the sensor terminal block • Calibration shift caused by heat cycling or vibration	• Rerun SMART Meter Verification (8714i) • Perform the sensor checks detailed in *Section 12.6*. • Remove the sensor and send back for evaluation and / or recalibration
Coil Circuit Health	• Moisture in the sensor terminal block • Shorted Coil	
Electrode Circuit Health	• Electrode resistance baseline was not taken after installation • Test condition was not selected properly • Moisture in the sensor terminal block • Coated electrodes • Shorted electrodes	

12.5 Basic troubleshooting

When troubleshooting a magmeter, it is important to identify the issue. *Table 12-7* provides common symptoms displayed by a magmeter that is not functioning properly. This table provides potential causes and suggested corrective actions for each symptom.

Table 12-7: Common Magmeter Issue

Symptom	Potential cause	Corrective action
Output at 0 mA	No power to transmitter	Check power source and connections to the transmitter
	Analog output improperly configured	Check the analog power switch position
		Verify wiring and analog power

Table 12-7: Common Magmeter Issue *(continued)*

Symptom	Potential cause	Corrective action
	Electronics failure	Verify transmitter operation with an 8714D Calibration Standard or replace the electronic stack
	Blown fuse	Check the fuse and replace with an appropriately rated fuse, if necessary
Output at 4 mA	Transmitter in multidrop mode	Configure Poll Address to 0 to take transmitter out of multidrop mode
	Low Flow Cutoff set too high	Configure Low Flow Cutoff to a lower setting or increase flow to a value above the low flow cutoff
	PZR Activated	
	Flow is in reverse direction	Enable Reverse Flow function
	Shorted coil	Coil check – perform sensor test
	Empty pipe	Fill pipe
	Electronics failure	Verify transmitter operation with an 8714D Calibration Standard or replace the electronics stack
Output will not reach 20 mA	Loop resistance is greater than 600 ohms	Reduce loop resistance to less than 600 ohms
		Perform analog loop test
	Insufficient supply voltage to analog output	Verify analog output supply voltage
		Perform analog loop test
Output at 20.8 mA	Transmitter not ranged properly	Reset the transmitter range values – see *Section 5.2*
		Check tube size setting in transmitter and make sure it matches the actual tube size – see *Section 5.2*
Output at alarm level	Electronics failure	Cycle power. If alarm is still present, verify transmitter operation with an 8714 D Calibration Standard or replace the electronics stack
	Open coil circuit	Check coil drive circuit connections at the sensor and at the transmitter
	Analog output diagnostic alarm is active	See *AO diagnostic alarm*
	Coil power or coil current is over limit	Check coil drive circuit connections at the sensor and at the transmitter
		Cycle power. If alarm is still present, verify transmitter operation with an 8714 D Calibration Standard or replace the electronics stack
	Connected to incompatible sensor	See *Implementing a Universal Transmitter*
Pulse output at zero, regardless of flow	Wiring error	Refer to wiring diagram for pulse counter and pulse output. See *Section 6.2.1*.
	PZR activated	
	No power to transmitter	Refer to wiring diagram for pulse counter and pulse output.
		Power the transmitter

Table 12-7: Common Magmeter Issue *(continued)*

Symptom	Potential cause	Corrective action
	Reverse flow	Enable Reverse Flow function
	Electronics failure	Verify transmitter operation with an 8714D Calibration Standard or replace the electronics stack
	Pulse output incorrectly configured	Review configuration and correct as necessary
Communication problems with the Handheld Communicator	4–20 mA output configuration	Check analog power switch (internal/external). The Handheld Communicator requires a 4–20 mA output to function.
	Communication interface wiring problems	Incorrect load resistance (250 Ohm minimum, 600 Ohm maximum)Check appropriate wiring diagram
	Low batteries in the Handheld Communicator	Replace the batteries in the Handheld Communicator – see the communicator manual for instructions
	Old revision of software in the Handheld Communicator	Consult your local sales office about updating to the latest revision of software
Error Messages on LOI or Handheld Communicator	Many possible causes depending upon the message	See *Table 12-1*, *Table 12-2*, and *Table 12-3* for the LOI or Handheld Communicator messages
Discrete input does not register	Input signal does not provide enough counts	Verify that the discrete input provided meets the requirements in *Section 6.2.3*
		Perform a loop test to validate the analog control loop
		Perform a D/A trim. This allows the calibration of the analog output with an external reference at operating endpoints of the analog output.
Reading does not appear to be within rated accuracy	Transmitter, control system, or other receiving device not configured properly	Check all configuration variables for the transmitter, sensor, communicator, and/or control system
		Check these other transmitter settings:
		Sensor calibration number
		Units
		Line size
		Perform a loop test to check the integrity of the circuit
	Electrode Coating	Enable Coated Electrode Detection diagnostic
		Use bullet-nose electrodes
		Downsize sensor to increase flow rate above 3 ft/s
		Periodically clean sensor
	Gas/air in line	Move the sensor to another location in the process line to ensure it is full under all conditions
	Moisture problem	Perform the sensor tests - see *Section 12.7*

Table 12-7: Common Magmeter Issue *(continued)*

Symptom	Potential cause	Corrective action
	Insufficient upstream/downstream pipe diameter	Move sensor to a new location with 5 pipe diameters upstream and 2 pipe diameters downstream if possible
	Cables for multiple magmeters run through same conduit	Use dedicated conduit run for each sensor and transmitter
	Improper wiring	If electrode shield and electrode signal wires are switched, flow indication will be about half of what is expected. Check wiring diagrams.
	Flow rate is below 1 ft/s (specification issue)	See accuracy specification for specific transmitter and sensor
	Auto zero was not performed when the coil drive frequency was changed from 5 Hz to 37 Hz	Set the coil drive frequency to 37 Hz, verify the sensor is full, verify there is no flow, and perform the auto zero function
	Sensor failure–shorted electrode	Perform the sensor tests - see *Section 12.7*
	Sensor failure–shorted or open coil	Perform the sensor tests - see *Section 12.7*
	Transmitter failure	Verify transmitter operation with an 8714 Calibration Standard or replace the electronics board
Noisy Process	Chemical additives upstream of magnetic flowmeter	See *Section 12.4.3*
		Move injection point downstream of magnetic flowmeter, or move magnetic flowmeter
	Sludge flows–mining/coal/sand/slurries (other slurries with hard particles)	Decrease flow rate below 10 ft/s
	Styrofoam or other insulating particles in process	See *Section 12.4.3*
		Consult factory
	Electrode coating	Enable Coated Electrode Detection diagnostic
		Use a smaller sensor to increase flow rate above 3 ft/s
		Periodically clean sensor
	Gas/air in line	Move the sensor to another location in the process line to ensure it is full under all conditions
	Low conductivity fluids (below 10 microsiemens/cm)	Trim electrode and coil wires – see *Section 4.4.3*
		Keep flow rate below 3 FPS
		Integral mount transmitter
		Use component cable - see *Section 4.4.3*
Meter output is unstable	Medium to low conductivity fluids (10–25 microsiemens/cm) combined with cable vibration or 60 Hz interference	Eliminate cable vibration
		Move cable to lower vibration run
		Tie down cable mechanically
		Use an integral mount
		Trim electrode and coil wires - see *Section 4.4.3*

Table 12-7: Common Magmeter Issue *(continued)*

Symptom	Potential cause	Corrective action
		Route cable line away from other equipment powered by 60 Hz
		Use component cable - see *Section 4.4.3*
	Electrode incompatibility	Check the Technical Data Sheet, Magnetic Flowmeter Material Selection Guide (document number 00816-0100-3033), for chemical compatibility with electrode material
	Improper grounding	Check ground wiring – see *Section 3.4* for wiring and grounding procedures
	High local magnetic or electric fields	Move magnetic flowmeter (20–25 ft away is usually acceptable)
	Control loop improperly tuned	Check control loop tuning
	Sticky valve (look for periodic oscillation of meter output)	Service valve
	Sensor failure	Perform the sensor tests (See *Section 12.7*)
	Analog output loop problem	Check that the 4 to 20 mA loop matches the digital value Perform analog output test

12.6 Sensor troubleshooting

This section describes manual tests that can be performed on the sensor to verify the health of individual components. The tests will require the use of a digital multimeter capable of measuring conductance in nanoSiemens and an LCR meter. A sensor circuit diagram is shown in *Figure 12-1*. The tests described below will check for continuity or isolation of the internal components of the sensor.

Figure 12-1: Sensor Circuit Diagram (Simplified)

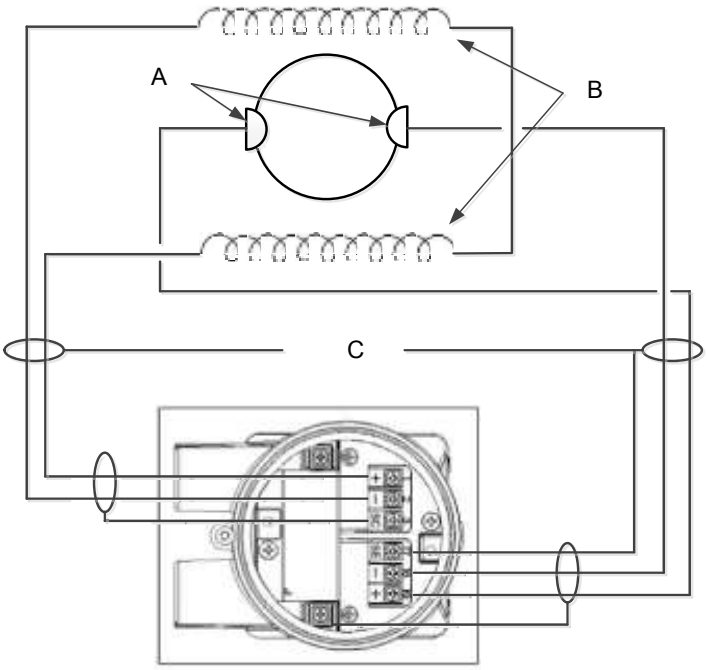

A. Electrodes
B. Coils
C. Sensor housing

12.6.1 Sensor adapter feed through pins

The sensor adapter is the part of the sensor that provides the internal connection feed-through wiring from the internal sensor components to the socket module connections. The top of the adapter has 10 pins - four pins for the coils, four pins for the electrodes, and two pins for the process reference. Each connection point has two pins associated for redundant continuity. See *Figure 12-2*.

The best location for testing the sensor components is taking measurements directly on the feed-through pins. Direct measurement on the pins eliminates the possibility of an erroneous measurement caused by a bad socket module or remote wiring. The figure below shows the feed-through pin connections as they relate to the terminal connections described in the tests.

Figure 12-2: Sensor Adapter Feed-through Pins

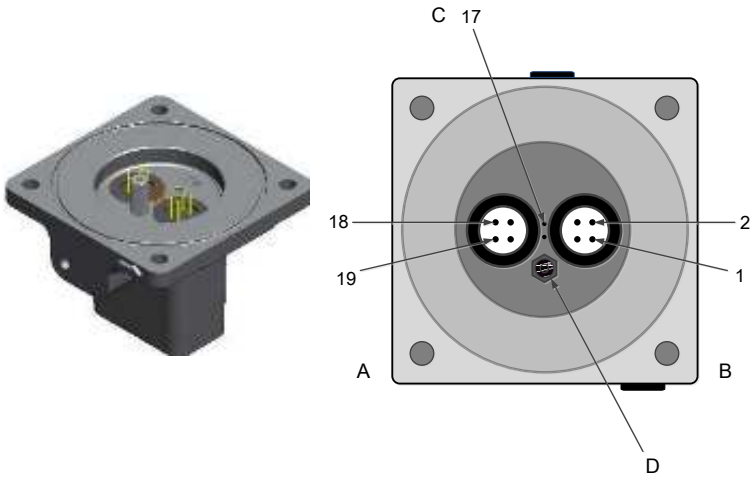

A. Electrode side
B. Coil side
C. Process reference
D. Orientation key

12.6.2 Socket module

Figure 12-3: Remote Mount Socket Module



12.7 Installed sensor tests

If a problem with an installed sensor is identified, refer to *Table 12-8* through *Table 12-12* to assist in troubleshooting the sensor. Disconnect or turn off power to the transmitter before performing any of the sensor tests. Always check the operation of test equipment before each test.

If possible, take all readings from feed-through pins in the sensor adapter. If the pins in the sensor adapter are inaccessible, take measurements at the sensor terminal block or through remote cabling as close to the sensor as possible. Readings taken through remote cabling that is more than 100 feet (30 meters) in length may provide incorrect or inconclusive information and should be avoided.

The expected values in the test below assume the measurements have been taken directly at the pins.

Table 12-8: Test A. Sensor coil

Test conditions	Expected value	Potential cause	Corrective action
• Location: installed or uninstalled • Required equipment: multimeter • Measuring at connections: 1 and 2 = R	2Ω≤R≤18Ω	• Open or shorted coil	• Remove and replace sensor

Table 12-9: Test B: Shields to case

Test conditions	Expected value	Potential cause	Corrective action
• Location: installed or uninstalled • Required equipment: multimeter • Measuring at connections: - 17 and 3 - 3 and case ground - 17 and case ground	<0.3Ω	• Moisture in terminal block • Leaky electrode • Process behind liner	• Clean terminal block • Remove sensor

Table 12-10: Test C. Coil to coil shield

Test conditions	Expected value	Potential cause	Corrective action
• Location: installed or uninstalled • Required equipment: multimeter • Measuring at connections: - 1 and 3 - 2 and 3	∞Ω (< 1nS)	• Process behind liner • Leaky electrode • Moisture in terminal block	• Remove sensor and dry • Clean terminal block • Confirm with sensor coil test

Table 12-11: Test D. Electrode to electrode shield

Test conditions	Expected value	Potential cause	Corrective action
• Location: installed • Required equipment: LCR (Set to Resistance and 120 Hz) • Measuring at connections: - 18 and 17 = R_1 - 19 and 17 = R_2	• R_1 and R_2 should be stable • $\lvert R_1 - R_2 \rvert \leq 300\Omega$	• Unstable R_1 or R_2 values confirm coated electrode • Shorted electrode • Electrode not in contact with process • Empty pipe • Low conductivity • Leaky electrode • Process reference ground not connected properly	• Remove coating from sensor wall • Use bullet-nose electrodes • Repeat measurement • Remove sensor and complete tests in *Section 12.8* • Connect process reference ground per *Section 3.4*

Table 12-12: Test E. Electrode to Electrode

Test conditions	Expected value	Potential cause	Corrective action
• Location: installed • Required equipment: LCR (Set to Resistance and 120 Hz) • Measuring at connections: 18 and 19 - 18 and 17 = R_1 - 19 and 17 = R_2	Should be stable and same relative magnitude of R_1 and R_2 from Test D	• Unstable R_1 or R_2 values confirm coated electrode • Shorted electrode • Electrode not in contact with process • Empty pipe • Low conductivity • Leaky electrode • Process reference ground not connected properly	• Remove coating from sensor wall • Use bullet-nose electrodes • Repeat measurement • Remove sensor and complete tests in *Section 12.8* • Connect process reference ground per *Section 3.4*

To test the sensor, a multimeter capable of measuring conductance in nanoSiemens is preferred. Conductance is the reciprocal of resistance.

Or:

$$1\ nanosiemens = \frac{1}{1\ gigaohm}\ 1\ nanosiemens = \frac{1}{1\ x\ 10^9\ ohm}$$

12.8 Uninstalled sensor tests

Sensor troubleshooting can also be performed on an uninstalled sensor. If test results from installed sensor tests are inconclusive, the next step is remove the sensor and perform the tests outlined in this section. Take measurements from the feed-through pins and directly on the electrode head inside the sensor. The measurement electrodes, 18 and 19, are on opposite sides in the inside diameter of the sensor. If applicable, the third process reference electrode is between the two measurement electrodes.

The expected values in the test below assume the measurements have been taken directly at the pins.

Table 12-13: Test A. Terminal to front electrode

Test conditions	Expected value	Potential cause	Corrective action
• Location: uninstalled • Required equipment: Multimeter • 18 and electrode 18(1)	≤ 1 Ω	• Shorted electrode • Open electrode • Coated electrode	• Replace sensor • Remove coating from sensor wall

(1) When the connection head is in the vertical upright position and the flow arrow (see Section 3.2.3) on the connection head flange points to the right, the front of the meter will be facing towards you. Electrode 18 is on the front of the meter. If you cannot determine the front of the meter, measure both electrodes. One electrode should result in an open reading, while the other electrode should be less than 0.3 ohm.

Table 12-14: Test B. Terminal to back electrode

Test conditions	Expected value	Potential cause	Corrective action
• Location: uninstalled • Required equipment: Multimeter • 19 and electrode 19(1)	≤ 1 Ω	• Shorted electrode • Open electrode • Coated electrode	• Replace sensor • Remove coating from sensor wall

(1) When the connection head is in the vertical upright position and the flow arrow (see Section 3.2.3) on the connection head flange points to the right, the front of the meter will be facing towards you. Electrode 18 is on the front of the meter. If you cannot determine the front of the meter, measure both electrodes. One electrode should result in an open reading, while the other electrode should be less than 0.3 ohm.

Table 12-15: Test C. Terminal to reference electrode

Test conditions	Expected value	Potential cause	Corrective action
• Location: uninstalled • Required equipment: Multimeter • 17 and process reference electrode(1)	≤ 0.3 Ω	• Shorted electrode • Open electrode • Coated electrode	• Replace sensor • Remove coating from sensor wall

(1) Only valid if the sensor has a process reference electrode.

Table 12-16: Test D. Terminal to case ground

Test conditions	Expected value	Potential cause	Corrective action
• Location: uninstalled • Required equipment: Multimeter • 17 and safety ground	≤ 0.3 Ω	• Moisture in terminal block • Leaky electrode • Process behind liner	• Clean terminal block • Replace terminal block • Replace sensor

Table 12-17: Test E. Electrode to electrode shield

Test conditions	Expected value	Potential cause	Corrective action
• Location: uninstalled • Required equipment: Multi-meter • 18 and 17 • 19 and 17	∞Ω (<1 nS)	• Shorted electrode • Leaky electrode • Moisture in terminal block	• Replace sensor • Clean terminal block • Replace terminal block

Table 12-18: Test F. Electrode shield to coil

Test conditions	Expected value	Potential cause	Corrective action
• Location: uninstalled • Required equipment: Multi-meter • 17 and 1	∞Ω (<1 nS)	• Process in coil housing • Moisture in terminal block	• Replace sensor • Clean terminal block • Replace terminal block

12.9 Technical support

Email addresses:

Worldwide: *flow.support@emerson.com*

Asia-Pacific: *APflow.support@emerson.com*

Middle East and Africa: *FlowTechnicalSupport@emerson.com*

North and South America		Europe and Middle East		Asia Pacific	
United States	800-522-6277	U.K.	0870 240 1978	Australia	800 158 727
Canada	+1 303-527-5200	The Netherlands	+31 (0) 318 495 555	New Zealand	099 128 804
Mexico	+41 (0) 41 7686 111	France	0800 917 901	India	800 440 1468
Argentina	+54 11 4837 7000	Germany	0800 182 5347	Pakistan	888 550 2682
Brazil	+55 15 3238 3677	Italy	8008 77334	China	+86 21 2892 9000
Venezuela	+58 26 1731 3446	Central & Eastern	+41 (0) 41 7686 111	Japan	+81 3 5769 6803
		Russia/CIS	+7 495 981 9811	South Korea	+82 2 3438 4600
		Egypt	0800 000 0015	Singapore	+65 6 777 8211
		Oman	800 70101	Thailand	001 800 441 6426
		Qatar	431 0044	Malaysia	800 814 008

North and South America		Europe and Middle East		Asia Pacific	
		Kuwait	663 299 01		
		South Africa	800 991 390		
		Saudi Arabia	800 844 9564		
		UAE	800 0444 0684		

12.10 Service

To expedite the return process outside the United States, contact the nearest Rosemount representative.

Within the United States and Canada, call the North American Response Center using the 800-654-RSMT (7768) toll-free number. The Response Center, available 24 hours a day, will assist you with any needed information or materials.

The center will ask for product, model, and serial numbers and will provide a Return Material Authorization (RMA) number. The center will also ask for the name of the process material to which the product was last exposed.

Mishandling products exposed to a hazardous substance may result in death or serious injury. If the product being returned was exposed to a hazardous substance as defined by OSHA, a copy of the required Material Safety Data Sheet (MSDS) for each hazardous substance identified must be included with the returned goods.

The North American Response Center will detail the additional information and procedures necessary to return goods exposed to hazardous substances.

Appendix A
Product Specifications

Topics covered in this appendix:

- *Basic specifications*
- *Transmitter specifications*
- *Sensor specifications*

A.1 Basic specifications

The tables below outline some of the basic performance, physical, and functional specifications.

Table A-1: Wall mount transmitter Specifications

	Style	Wall mount
	Base accuracy(1)	0.5% Standard 0.25% High Accuracy Option
	Mounting	Remote
	Power supply	Global AC or DC
	User interface	15 button tactile keypad
	Communication protocol	HART
	Diagnostics	Basic, DA1, DA2
	Sensor compatibility	All Rosemount plus other manufacturers
	Detailed specifications	*Section A.2*
	Ordering information	Product Data Sheet

(1) For complete accuracy specifications, please refer to Section A.2.1.

Table A-2: Field mount transmitter specifications

	Style	Field mount
	Base accuracy(1)	0.5% Standard 0.25% High Accuracy Option
	Mounting	Integral or Remote
	Power supply	Global AC or DC
	User interface	4 Optical Switch LOI or no display
	Communication protocol	HART
	Diagnostics	Basic, DA1, DA2
	Sensor compatibility	All Rosemount plus other manufacturers

Table A-2: Field mount transmitter specifications *(continued)*

	Detailed specifications	*Section A.2*
	Ordering information	Product Data Sheet

(1) For complete accuracy specifications, please refer to Section A.2.1.

Table A-3: Sensor specifications

	Style	Flanged
	Base accuracy(1)	0.5% Standard 0.25% High Accuracy Option
	Line sizes	½-in. to 48-in. (15 mm to 1200 mm)
	Design features	Standard Process Design
	Detailed specifications	*Section A.3*
	Ordering information	Product Data Sheet

(1) For complete accuracy specifications, refer to the sensor detailed specifications.

Table A-4: Lining Material Selection

Liner material	General characteristics
PTFE 	Highly chemical resistant
	Excellent high temperature capabilities
	Process temperature: -58 to 350 °F (-50 to 177 °C)
Polyurethane 	Limited chemical resistance
	Excellent abrasion resistance for slurries with small and medium particles
	Process temperature: 0 to 140 °F (-18 to 60 °C)
	Typically applied in clean water
Neoprene 	Very good abrasion resistance for small and medium particles
	Better chemical resistance than polyurethane
	Typically applied in water with chemicals, and sea water
	Preferred liner for high pressure > ASME B16.5 Class 900
	Process temperature: 0 to 176 °F (-18 to 80 °C)

Table A-5: Electrode Material

Electrode material	General characteristics
316L Stainless Steel	Good corrosion resistance
	Good abrasion resistance
	Not recommended for sulfuric or hydrochloric acids
Nickel Alloy 276 (UNS N10276)	Better corrosion resistance
	High strength
	Good in slurry applications
	Effective in oxidizing fluids

Table A-6: Electrode Type

Electrode type	General characteristics
Standard Measurement	Lowest cost
	Good for most applications
Measurement + Reference Electrode (Also see *Table A-7* and *Table A-8* for grounding options and installation)	Low cost grounding option especially for large line sizes
	Minimum conductivity of 100 microSiemens/cm
	Not recommended for electrolytic or galvanic corrosion applications
Bulletnose	Extended head protrudes into the flow stream for self-cleaning
	Best option for coating processes

Table A-7: Process Reference Options

Grounding options	General characteristics
No Grounding Options (grounding straps)	Acceptable for conductive unlined pipe
	Grounding straps provided at no cost
Reference Electrode	Same material as measurement electrodes
	Sufficient grounding option when process fluid conductivity is greater than 100 microSiemens/cm
	Not recommended in electrolysis applications, galvanic corrosion applications, applications where the electrodes may coat, or non-conductive pipe.

Table A-7: Process Reference Options *(continued)*

Grounding options	General characteristics
Grounding Rings	Low conductivity process fluids
	Cathodic or electrolysis applications that may have stray currents in or around the process
	Variety of materials for process fluid compatibility

Table A-8: Process Reference Installation

Type of pipe	Grounding straps	Grounding rings	Reference electrode	Lining protectors
Conductive unlined pipe	Acceptable	Not required	Not required	Not required
Conductive lined pipe	Not acceptable	Acceptable	Acceptable	Acceptable
Non-conductive pipe	Not acceptable	Acceptable	Not recommended	Acceptable

A.2 Transmitter specifications

A.2.1 Transmitter functional specifications

Transmitter coil drive current

500mA

Flow rate range

Capable of processing signals from fluids with velocities between 0.04 and 39 ft/s (0.01 to 12 m/s) for both forward and reverse flow in all sensor sizes. Full scale continuously adjustable between –39 and 39 ft/s (–12 to 12 m/s).

Conductivity limits

Process liquid must have a conductivity of 5 microSiemens/cm (5 micromhos/cm) or greater.

Power supply

90 - 250VAC @ 50/60Hz or 12 - 42VDC

Line power fuses

- 90 - 250VAC systems:
  - 2 amp quick acting

  - Bussman AGC2 or equivalent
- 12 - 42VDC systems
  - 3 amp quick acting
  - Bussman AGC3 or equivalent

Power consumption

- 90 - 250VAC: 40VA maximum
- 12 - 42VDC: 15W maximum

Switch-on current

- At 250VAC: Maximum 35.7A (< 5ms)
- At 42VDC: Maximum 42A (< 5ms)

AC power supply requirements

Units powered by 90 - 250VAC have the following power requirements. Peak inrush is 35.7A at 250VAC supply, lasting approximately 1ms. Inrush for other supply voltages can be estimated with: Inrush (Amps) = Supply (Volts) / 7.0

Figure A-1: AC current requirements

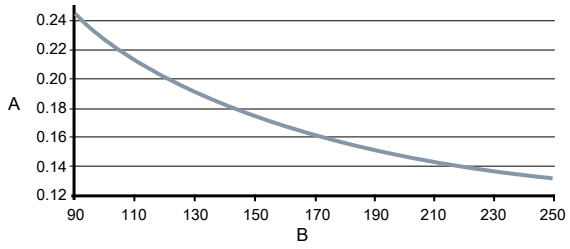

A. Supply current (amps)
B. Power supply (VAC)

Figure A-2: Apparent power

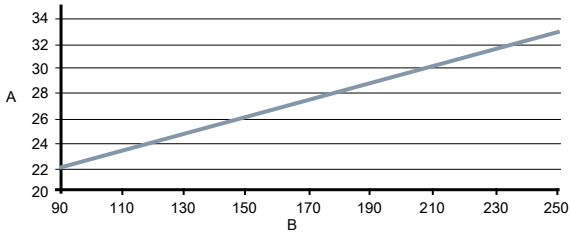

A. Apparent power (VA)
B. Power supply (VAC)

DC power supply requirements

Units powered by 12VDC power supply may draw up to 1.2A of current steady state. Peak inrush is 42A at 42VDC supply, lasting approximately 1ms. Inrush for other supply voltages can be estimated with: Inrush (Amps) = Supply (Volts) / 1.0

Figure A-3: DC current requirements

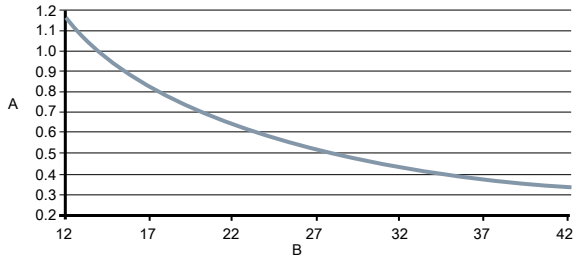

A. Supply current (amps)
B. Power supply (VDC)

Ambient temperature limits

- Operating:
  - –58 to 140 °F (–50 to 60 °C) without local operator interface
  - –4 to 140 °F (–20 to 60 °C) with local operator interface
  - The Local Operator Interface (LOI) will not display at temperatures below -20°C
- Storage:
  - –58 to 185 °F (–50 to 85 °C) without local operator interface
  - –22 to 176 °F (–30 to 80 °C) with local operator interface

Humidity limits

0–95% RH to 140 °F (60 °C)

Altitude

2000 meters maximum

Enclosure rating

Type 4X, IEC 60529, IP66 (transmitter)

Transient protection rating

Built in transient protection that conforms to:

- IEC 61000-4-4 for burst currents
- IEC 61000-4-5 for surge currents
- IEC 611185-2.2000, Class 3 up to 2kV and up to 2kA protection

Turn-on time

- 5 minutes to rated accuracy from power up
- 5 seconds from power interruption

Start-up time

50ms from zero flow

Low flow cut-off

Adjustable between 0.01 and 38.37 ft/s (0.003 and 11.7 m/s). Below selected value, output is driven to the zero flow rate signal level.

Overrange capability

Signal output will remain linear until 110% of upper range value or 44 ft/s (13 m/s). The signal output will remain constant above these values. Out of range message displayed on LOI and the Field Communicator.

Damping

Adjustable between 0 and 256 seconds

A.2.2 Advanced diagnostics capabilities

Basic

- Self test
- Transmitter faults
- Analog output test
- Pulse output test
- Tunable empty pipe
- Reverse flow
- Coil circuit fault
- Electronics temperature

Process diagnostics (DA1)

- Ground/wiring fault
- High process noise
- Electrode coating diagnostic

Smart Meter Verification (DA2)

- Smart Meter Verification (continuous or on-demand)
- 4-20mA loop verification(1)

(1) Available with HART output only.

A.2.3 Output signals

Analog output adjustment (2)

4–20mA, switch-selectable as internally or externally powered.

Analog loop load limitations

- Internally powered 24VDC max, 500 ohms max loop resistance
- Externally powered 10.8 - 30VDC max.
- Loop resistance is determined by the voltage level of the external power supply at the transmitter terminals:

Figure A-4: Analog loop load limitations

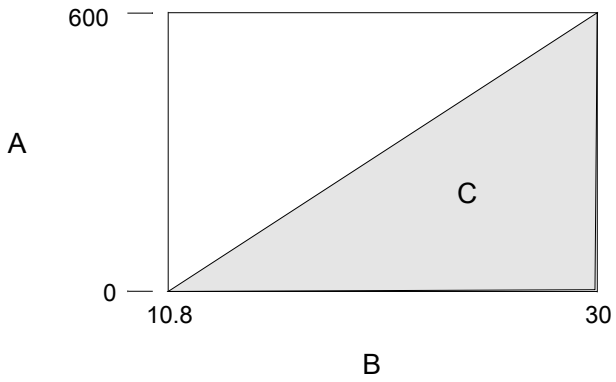

A. Load (ohms)
B. Power supply (volts)
C. Operating region

- $R_{max} = 31.25 (V_{ps}–10.8)$
- V_{ps} = *power supply voltage (volts)*
- *Rmax = maximum loop resistance (ohms)*

The analog output is automatically scaled to provide 4mA at lower range value and 20mA at upper range value. Full scale continuously adjustable between -39 and 39 ft/s (-12 to 12 m/sec), 1 ft/s (0.3 m/s) minimum span.

HART Communications is a digital flow signal. The digital signal is superimposed on the 4–20mA signal and is available for the control system interface. A minimum of 250 ohms loop resistance is required for HART communications.

Analog alarm mode

High or low alarm signal is user-selectable via the Alarm switch on the front of the electronics. NAMUR-compliant alarm limits are software configurable and can be preset via CDS (C1). Individual diagnostic alarms are also software configurable. Alarms will drive the analog signal to the following mA values. High or low alarm signal is user-selectable via

(2) For transmitters with intrinsically safe outputs (option code B), power must be supplied externally.

the Alarm switch on the front of the electronics. NAMUR-compliant alarm limits are software configurable and can be preset via CDS (C1). Individual diagnostic alarms are also software configurable. Alarms will drive the analog signal to the following mA values.

Low	3.75 mA	Requires CDS (C1)
High	22.50 mA	Factory default
NAMUR Low	3.5 mA	Requires CDS (C1)
NAMUR High	22.6 mA	Requires CDS (C1)

Scalable pulse frequency adjustment[3][4]

- 0-10,000Hz, switch-selectable as internally or externally powered
- Pulse value can be set to equal desired volume in selected engineering units
- Pulse width adjustable from 0.1 to 650 ms
- Internally powered: Outputs up to 12VDC
- Externally powered: Input 5 - 28VDC

Output testing

Analog output test [3]	Transmitter may be commanded to supply a specified current between 3.5 and 23mA.
Pulse output test [4]	Transmitter may be commanded to supply a specified frequency between 1 and 10,000Hz.

Optional discrete output function (AX option)

Externally powered at 5 - 28VDC, 240mA max, solid state switch closure to indicate either:

Reverse flow	Activates switch closure output when reverse flow is detected.
Zero flow	Activates switch closure output when flow goes to 0 ft/s or below low flow cutoff.
Empty pipe	Activates switch closure output when an empty pipe condition is detected.
Transmitter faults	Activates switch closure output when a transmitter fault is detected.
Flow limit 1, flow limit 2	Activates switch closure output when the transmitter measures a flow rate that meets the conditions established for this alert. There are two independent flow limit alerts that can be configured as discrete outputs.
Totalizer limit	Activates switch closure output when the transmitter measures a total flow that meets the conditions established for this alert.
Diagnostic status	Activates switch closure output when the transmitter detects a condition that meets the configured criteria of this output.

(3) For transmitters with intrinsically safe outputs (option code B), power must be supplied externally.

(4) For transmitters with intrinsically safe outputs (option code B), frequency range is limited to 0-5000Hz.

Optional discrete input function (AX option)

Externally powered at 5 - 28VDC, 1.4 - 20mA to activate switch closure to indicate either:

Reset Totalizer A (or B or C)	Resets Totalizer A (or B or C) value to zero.
Reset All Totals	Resets all totalizer values to zero.
Positive Zero Return (PZR)	Forces outputs of the transmitter to zero flow.

Security lockout

Security lockout switch on the electronics board can be set to deactivate all LOI and HART-based communicator functions to protect configuration variables from unwanted or accidental change.

LOI lockout

The display can be manually locked to prevent unintentional configuration changes. The display lock can be activated through a HART communication device, or by holding the UP arrow for 3 seconds and then following the on-screen instructions. When the display lock is activated, a lock symbol will appear in the lower right hand corner of the display. To deactivate the display lock, hold the UP arrow for 3 seconds and follow the on-screen instructions.

Display auto lock can be configured from the LOI with the following settings: OFF, 1 Minute, or 10 Minutes

Sensor compensation

Rosemount sensors are calibrated in a flow lab at the factory and are assigned a calibration number. The calibration number must be entered into the transmitter, enabling interchangeability of sensors without calculations or a compromise in standard accuracy.

Transmitters and other manufacturers' sensors can be calibrated at known process conditions or at the Rosemount NIST-Traceable Flow Facility. Transmitters calibrated on site require a two-step procedure to match a known flow rate. This procedure can be found in the operations manual.

A.2.4 Performance specifications

System specifications are given using the frequency output and with the unit at reference conditions.

Accuracy

Includes the combined effects of linearity, hysteresis, and repeatability.

- Standard system accuracy:
  - ±0.5% of rate from 1 to 39 ft/s (0.3 to 12 m/s)
  - ±0.005 ft/s (0.0015 m/s) from the low flow cutoff to 1 ft/s (0.3 m/s)
- Optional high accuracy:(5)

(5) For sensor sizes greater than 12 in. (300 mm) the high accuracy is ±0.25% of rate from 3 to 39 ft/sec (1 to 12 m/sec).

- ±0.25% of rate ±1.0 mm/sec from 3 to 39 ft/s (1 to 12 m/s)

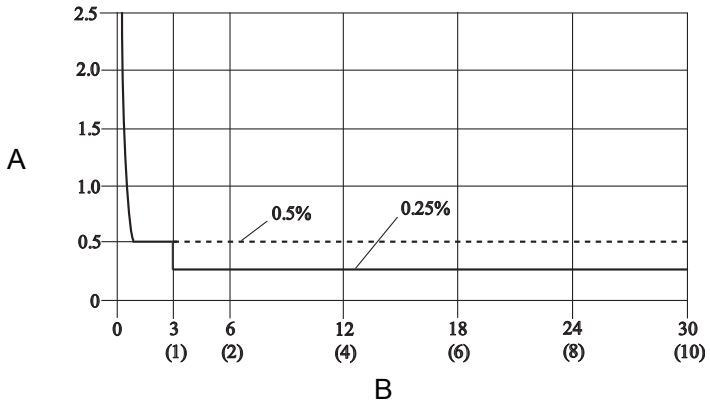

A. Percentage of rate
B. Velocity in ft/s (m/s)

Analog output effects

Analog output has the same accuracy as frequency output plus an additional ±4 µ A at room temperature.

Repeatability	±0.1% of reading
Response time (analog output)	20 ms max response time to step change in input
Stability	±0.1% of rate over six months
Ambient temperature effect	±0.25% change over operating temperature range

A.2.5 Wall mount transmitter physical specifications

Materials of construction

Standard housing	Low copper aluminum Type 4X and IEC 60529 IP66
Paint	Polyurethane coat (1.8 to 2.2 mils thick)
Optional housing	Not available
Cover gaskets	Silicone

Electrical connections

Conduit entries	½ inch NPT or M20
Terminal block screws	6-32 (No. 6) suitable for up to 14 AWG wire

Safety grounding screws	External stainless assembly, M5; internal 8-32 (No. 8)

Vibration rating

2G per IEC 61298

Dimensions

See Product Data Sheet.

Weight

Wall mount transmitter	Aluminum	Approximately 9 lbs. (4 kg)

Add 1 pound (0.5 kg) for local operator interface.

A.2.6 Field mount transmitter physical specifications

Materials of construction

Standard housing	Low copper aluminum Type 4X and IEC 60529 IP66
Paint	Polyurethane coat (1.8 to 2.2 mils thick)
Optional housing	316/316L unpainted, option code SH Type 4X and IEC 60529 IP66
Cover gasket	Aluminum housing: Buna-N

Electrical connections

Conduit entries	Available in 1/2 inch NPT or M20. See ordering table footnotes for details
Terminal block screws	6-32 (No. 6) suitable for up to 14 AWG wire
Safety grounding screws	External stainless assembly, M5; internal 8-32 (No. 8)

Vibration rating

Integral mount	2G per IEC 61298
Remote mount	5G per IEC 61298

Dimensions

See Product Data Sheet.

Weight

Field mount transmitter only	Aluminum	Approximately 7 lbs. (3.2 kg)
	316 stainless steel	Approximately 23 lbs. (10.5 kg)

Add 1 pound (0.5 kg) for local operator interface.

A.3 Sensor specifications



A.3.1 Functional specifications

Service

Conductive liquids and slurries

Line sizes

½ –in. to 48-in. (15 mm to 1200 mm)

Sensor coil resistance

7 - 16 Ω

Interchangeability

System accuracy is maintained regardless of line size or optional features. Each sensor nameplate has a sixteen-digit calibration number that can be entered into a transmitter through the Local Operator Interface (LOI) or the Field Communicator.

Upper range limit

39.37 ft/s (12 m/s)

Ambient temperature limits

- –20 to 140 °F (–29 to 60 °C) standard design

Pressure limits

See *Process temperature limits*.

Vacuum limits

PTFE lining	Full vacuum to 350 °F (177 °C) through 4-in. (100 mm) line sizes. Consult Technical Support for vacuum applications with line sizes of 6 inches (150 mm) or larger
All other standard sensor lining materials	Full vacuum to maximum material temperature limits for all available line sizes.

Submergence protection IP68

The remote mount sensor is rated IP68 for submergence to a depth of 33 ft (10 m) for a period of 48 hours. IP68 rating requires that the transmitter must be remote mount. Installer must use IP68 approved cable glands, conduit connections, and/or conduit plugs.

For more details on proper installation techniques for IP68, reference Rosemount Technical Note 00840-0100-4750 available on www.rosemount.com.

Conductivity limits

Process liquid must have a minimum conductivity of 5 microSiemens/cm (5 micromhos/cm) or greater.

Process temperature limits

PTFE lining	–58 to 350 °F (–50 to 177 °C)
Polyurethane lining	0 to 140 °F (–18 to 60 °C)
Neoprene lining	0 to 176 °F (–18 to 80 °C)

Table A-9: Temperature vs. Pressure Limits for ASME B16.5 class flanges (1)

Sensor temperature vs. pressure limits for ASME B16.5 class flanges (½ -in. to 24-in. Line Sizes)(2)					
		Pressure			
Flange material	**Flange rating**	**@ -20 to 100 °F (-29 to 38 °C)**	**@ 200 °F (93 °C)**	**@ 300 °F (149 °C)**	**@ 350 °F (177 °C)**
Carbon Steel	Class 150	285 psi	260 psi	230 psi	215 psi
	Class 300	740 psi	675 psi	655 psi	645 psi
304 Stainless Steel	Class 150	275 psi	235 psi	205 psi	190 psi
	Class 300	720 psi	600 psi	530 psi	500 psi

(1) Liner temperature limits must also be considered.

(2) 30-in. and 36-in. AWWA C207 Class D rated to 150 psi at atmospheric temperature.

Table A-10: Temperature vs. Pressure Limits for AS2129 Table D and E flanges (1)

Sensor temperature vs. pressure limits for AS2129 Table D and E flanges (4-in. to 24-in. line sizes)					
		Pressure			
Flange Material	Flange Rating	@ -29 to 50 °C (-20 to 122 °F)	@ 100 °C (212 °F)	@ 150 °C (302 °F)	@ 200 °C (392 °F)
Carbon Steel	D	101.6 psi	101.6 psi	101.6 psi	94.3 psi
	E	203.1 psi	203.1 psi	203.1 psi	188.6 psi

(1) Liner temperature limits must also be considered.

Table A-11: Temperature vs. Pressure Limits for EN 1092-1 flanges (1)

Sensor temperature vs. pressure limits for EN 1092-1 flanges (15 mm to 600 mm Line Sizes)					
		Pressure			
Flange material	Flange rating	@ -29 to 50 °C (-20 to 122 °F)	@ 100 °C (212 °F)	@ 150°C (302 °F)	@ 175°C (347 °F)
Carbon Steel	PN 10	10 bar	10 bar	9.7 bar	9.5 bar
	PN 16	16 bar	16 bar	15.6 bar	15.3 bar
	PN 40	40 bar	40 bar	39.1 bar	38.5 bar
304 Stainless Steel	PN 10	9.1 bar	7.5 bar	6.8 bar	6.5 bar
	PN 16	14.7 bar	12.1 bar	11.0 bar	10.6 bar
	PN 40	36.8 bar	30.3 bar	27.5 bar	26.5 bar

(1) Liner temperature limits must also be considered.

Table A-12: Temperature vs. Pressure Limits for GB/T 9119 Flanges (1)

Temperature vs. Pressure Limits for GB/T 9119 Flanges				
		Pressure (Mpa)		
Flange material	Flange rating	≤ 20 °C	@ 100 °C (212 °F)	@ 150 °C (302 °F)
Carbon steel Group 3E0	PN 10	1.00	0.92	0.88
	PN 16	1.60	1.48	1.40
	PN 40	4.00	3.71	3.52
304 SST Group 11E0	PN 10	1.00	0.90	0.81
	PN 16	1.60	1.45	1.31
	PN 40	4.00	3.63	3.27

(1) Liner temperature limits must also be considered.

Table A-13: Temperature vs. Pressure Limits for JIS B2220 Flanges (1)

Temperature vs. Pressure Limits for JIS B2220 Flanges			
		Pressure (Mpa)	
Flange material	Flange rating	≤ 50 °C (122 °F)	@ 120 °C (248 °F)
Carbon steel	10K	1.4	1.4
304 stainless steel (15 mm to 65 mm)	10K	1.4	1.4
304 stainless steel (≤ 80 mm)	10K	1.4	1.4

(1) Liner temperature limits must also be considered.

A.3.2 Physical specifications

Non-wetted materials

Sensor Pipe	Type 304/304L SST
Flanges	Carbon steel, Type 304/304L SST
Coil housing	Rolled carbon steel
Paint	Polyurethane coat (2.6 mils or greater)

Process-wetted materials

Lining	PTFE, Polyurethane, Neoprene
Electrodes	316L SST, Nickel Alloy 276 (UNS N10276)

Flat-faced flanges

Flat-faced flanges are manufactured with full-face liners. Available in Neoprene only.

Process connections

ASME B16.5	• Class 150: ½ -in. to 24-in. (15 mm to 600 mm) • Class 300: ½ -in. to 24-in. (15 mm to 600 mm)
AWWA C207	• Class D: 30-in. to 48-in. (750 mm to 1200 mm) • Class E: 30-in. to 48-in. (750 mm to 1200 mm)
EN 1092-1	• PN10: 200 mm to 900 mm (8-in. to 36-in.) • PN16: 50 mm to 900 mm (2 -in. to 36-in.) • PN40: 15 mm to 900 mm (½-in. to 36-in.)
AS2129	• Table D and Table E: 15 mm to 900 mm (½-in. to 36-in.)

AS4087	• PN16, PN21: 2-in. to 40-in., 48-in. (8-in. excluded) (50 mm to 1000 mm, 1200 mm) • PN35: 2-in. to 36-in. (8-in. excluded) (50 mm to 900 mm)
GB/T9119	• PN10: 8- and 24-, 36-, 40-, 48-in. (200 mm to 600 mm, 900 mm, 1000 mm, 1200 mm) • PN16: 4- and 24-, 36-, 40-in. (100 mm to 600 mm, 900 mm, 1000 mm) • PN40: ½- to 24-in. (15 mm to 600 mm)
JIS B2220	• 10K, 20K: ½- to 24-in. (15 mm to 600 mm)

Electrical connections

Conduit entries	Available with 1/2 inch NPT and M20
Terminal block screws	6-32 (No. 6) suitable for up to 14 AWG wire
Safety grounding screws	External stainless assembly, M5; internal 8-32 (No. 8)

Process reference electrode (optional)

A process reference electrode can be installed similarly to the measurement electrodes through the sensor lining. It will be made of the same material as the measurement electrodes.

Grounding rings (optional)

Grounding rings can be installed between the flange and the sensor face on both ends of the sensor. Single ground rings can be installed on either end of the sensor. They have an I.D. slightly larger than the sensor I.D. and an external tab to attach ground wiring. Grounding rings are available in 316L SST, and Nickel Alloy 276 (UNS N10276).

Dimensions

See Product Data Sheet.

Weight

See Product Data Sheet.

Appendix B
Product Certifications

For detailed approval certification information and installation drawings, please see the appropriate document listed below:

- Document number 00825-MA00-0004: *Rosemount 8750W Approval Document - IECEx and ATEX*
- Document number 00825-MA00-0005: *Rosemount 8750W Approval Document – Class Division*
- Document number 00825-MA00-0006: *Rosemount 8750W Approval Document – North America Zone*

Appendix C
Wiring Diagrams

Topics covered in this appendix:

- *Installation and wiring drawings*
- *775 Smart Wireless THUM™ Adapter wiring diagrams (field mount)*
- *775 Smart Wireless THUM™ Adapter wiring diagrams (wall mount)*
- *475 Field Communicator wiring diagrams (field mount)*
- *Field Communicator wiring diagrams (wall mount)*

C.1 Installation and wiring drawings

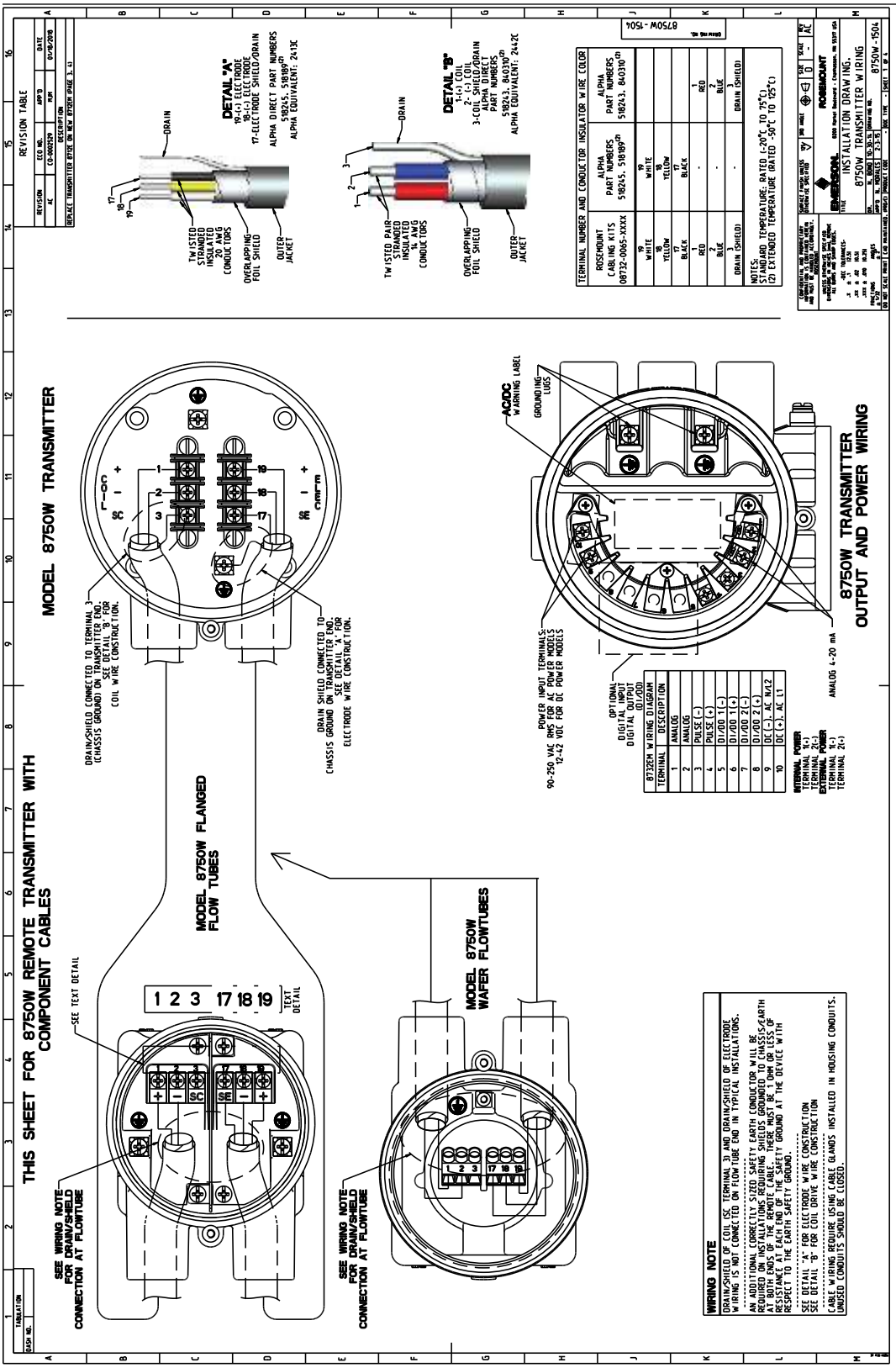

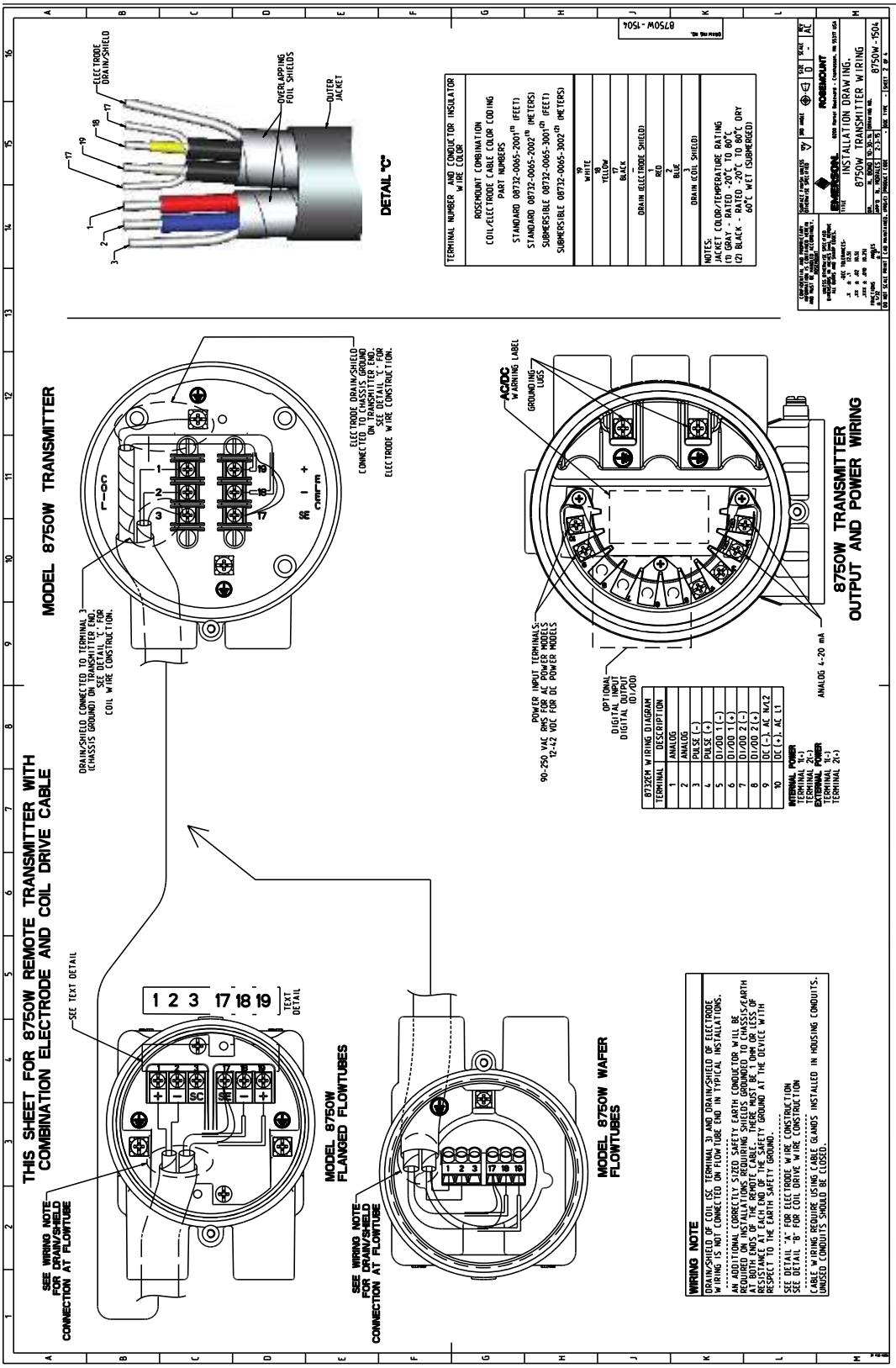
THIS SHEET FOR 8750W REMOTE TRANSMITTER WITH COMBINATION ELECTRODE AND COIL DRIVE CABLE
MODEL 8750W TRANSMITTER
DETAIL "C"
ELECTRODE DRAIN/SHIELD
OVERLAPPING FOIL SHIELDS
OUTER JACKET
TERMINAL NUMBER AND CONDUCTOR INSULATOR WIRE COLOR
ROSEMOUNT COIL/ELECTRODE CABLE COLOR CODING PART NUMBERS
STANDARD 08732-0065-2001 (FEET) STANDARD 08732-0065-2002 (METERS)
SUBMERSIBLE 08732-0065-3001 (FEET) SUBMERSIBLE 08732-0065-3002 (METERS)
19 WHITE
18 YELLOW
17 BLACK
DRAIN (ELECTRODE SHIELD)
1 RED
2 BLUE
DRAIN (COIL SHIELD)
NOTES:
JACKET COLOR/TEMPERATURE RATING
(1) GRAY - RATED -20°C TO 80°C
(2) BLACK - RATED -20°C TO 80°C DRY
60°C WET (SUBMERGED)
8750W - 1504
ROSEMOUNT
INSTALLATION DRAWING.
8750W TRANSMITTER WIRING
8750W - 1504
DRAIN/SHIELD CONNECTED TO TERMINAL 3 (CHASSIS GROUND) ON TRANSMITTER END. SEE DETAIL "C" FOR COIL WIRE CONSTRUCTION.
ELECTRODE DRAIN/SHIELD CONNECTED TO CHASSIS GROUND ON TRANSMITTER END. SEE DETAIL "C" FOR ELECTRODE WIRE CONSTRUCTION.
AC/DC WARNING LABEL
GROUNDING LUGS
POWER INPUT TERMINALS 90-250 VAC RMS FOR AC POWER MODELS 12-42 VDC FOR DC POWER MODELS
OPTIONAL DIGITAL INPUT DIGITAL OUTPUT (DI/DO)
8732EM WIRING DIAGRAM
TERMINAL DESCRIPTION
1 ANALOG
2 ANALOG
3 PULSE (-)
4 PULSE (+)
5 DI/DO 1 (-)
6 DI/DO 1 (+)
7 DI/DO 2 (-)
8 DI/DO 2 (+)
9 DC (-). AC N/L2
10 DC (+). AC L1
INTERNAL POWER
TERMINAL 9(-)
TERMINAL 2(-)
EXTERNAL POWER
TERMINAL 9(-)
TERMINAL 2(+)
ANALOG 4-20 mA
8750W TRANSMITTER OUTPUT AND POWER WIRING
SEE TEXT DETAIL
1 2 3 17 18 19
TEXT DETAIL
SEE WIRING NOTE FOR DRAIN/SHIELD CONNECTION AT FLOWTUBE
MODEL 8750W FLANGED FLOWTUBES
SEE WIRING NOTE FOR DRAIN/SHIELD CONNECTION AT FLOWTUBE
MODEL 8750W WAFER FLOWTUBES
WIRING NOTE
DRAIN/SHIELD OF COIL (SC) TERMINAL 3) AND DRAIN/SHIELD OF ELECTRODE WIRING IS NOT CONNECTED ON FLOWTUBE END IN TYPICAL INSTALLATIONS.
AN ADDITIONAL CORRECTLY SIZED SAFETY EARTH CONDUCTOR WILL BE REQUIRED ON INSTALLATIONS REQUIRING SHIELDS GROUNDED TO CHASSIS/EARTH AT BOTH ENDS OF THE REMOTE CABLE. THERE MUST BE 1 OHM OR LESS OF RESISTANCE AT EACH END OF THE SAFETY GROUND AT THE DEVICE WITH RESPECT TO THE EARTH SAFETY GROUND.
SEE DETAIL "A" FOR ELECTRODE WIRE CONSTRUCTION
SEE DETAIL "B" FOR COIL DRIVE WIRE CONSTRUCTION
CABLE WIRING REQUIRE USING CABLE GLANDS INSTALLED IN HOUSING CONDUITS. UNUSED CONDUITS SHOULD BE CLOSED.

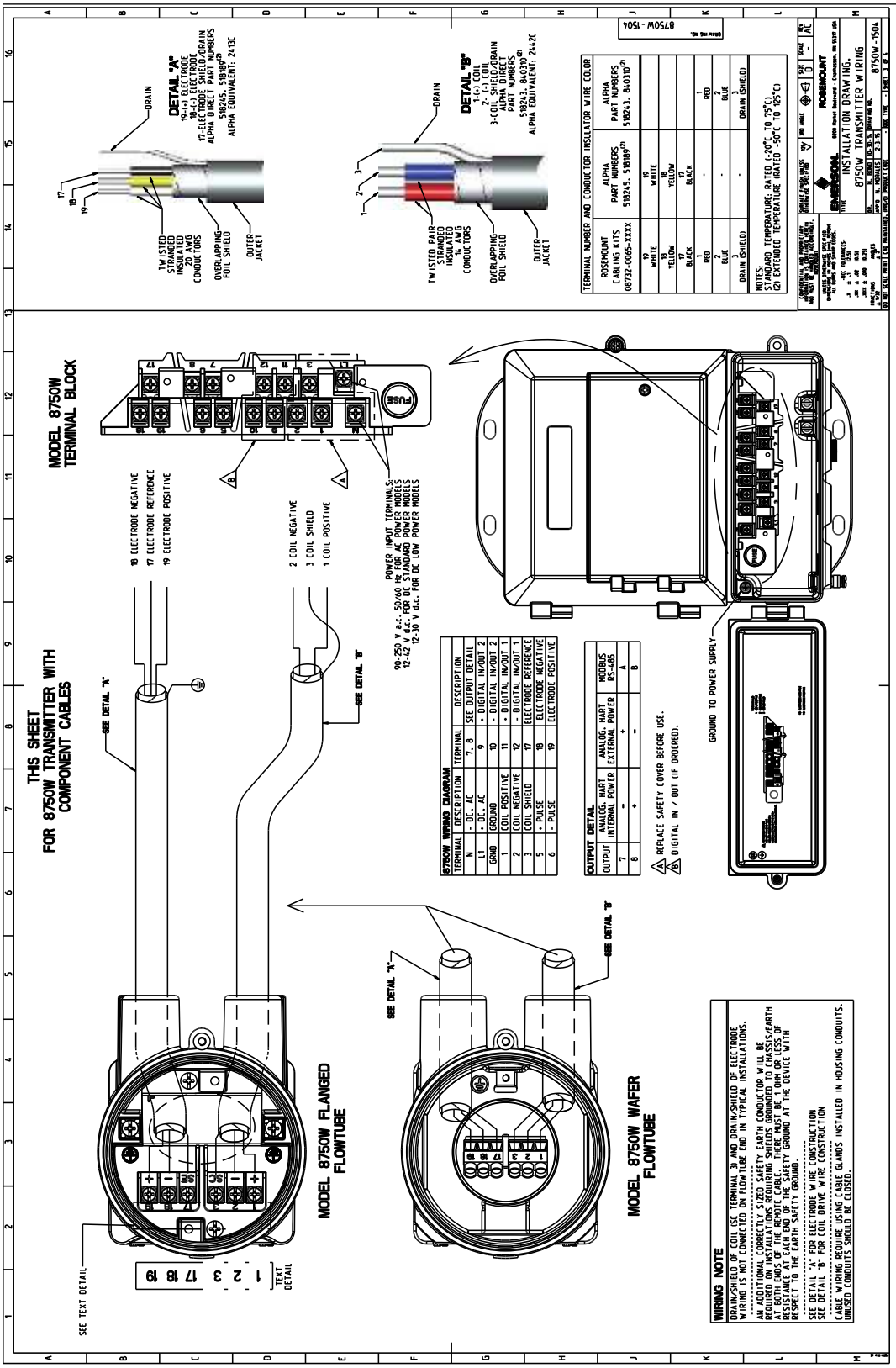
8750W - 1504
DETAIL "A"
DETAIL "B"
TERMINAL NUMBER AND CONDUCTOR INSULATOR WIRE COLOR
NOTES:
STANDARD TEMPERATURE: RATED (-20°C TO 75°C).
(2) EXTENDED TEMPERATURE (RATED -50°C TO 125°C)
INSTALLATION DRAWING.
8750W TRANSMITTER WIRING
8750W - 1504
MODEL 8750W TERMINAL BLOCK
THIS SHEET FOR 8750W TRANSMITTER WITH COMPONENT CABLES
8750W WIRING DIAGRAM
OUTPUT DETAIL
WIRING NOTE
MODEL 8750W FLANGED FLOWTUBE
MODEL 8750W WAFER FLOWTUBE
GROUND TO POWER SUPPLY
REPLACE SAFETY COVER BEFORE USE.
DIGITAL IN / OUT (IF ORDERED).

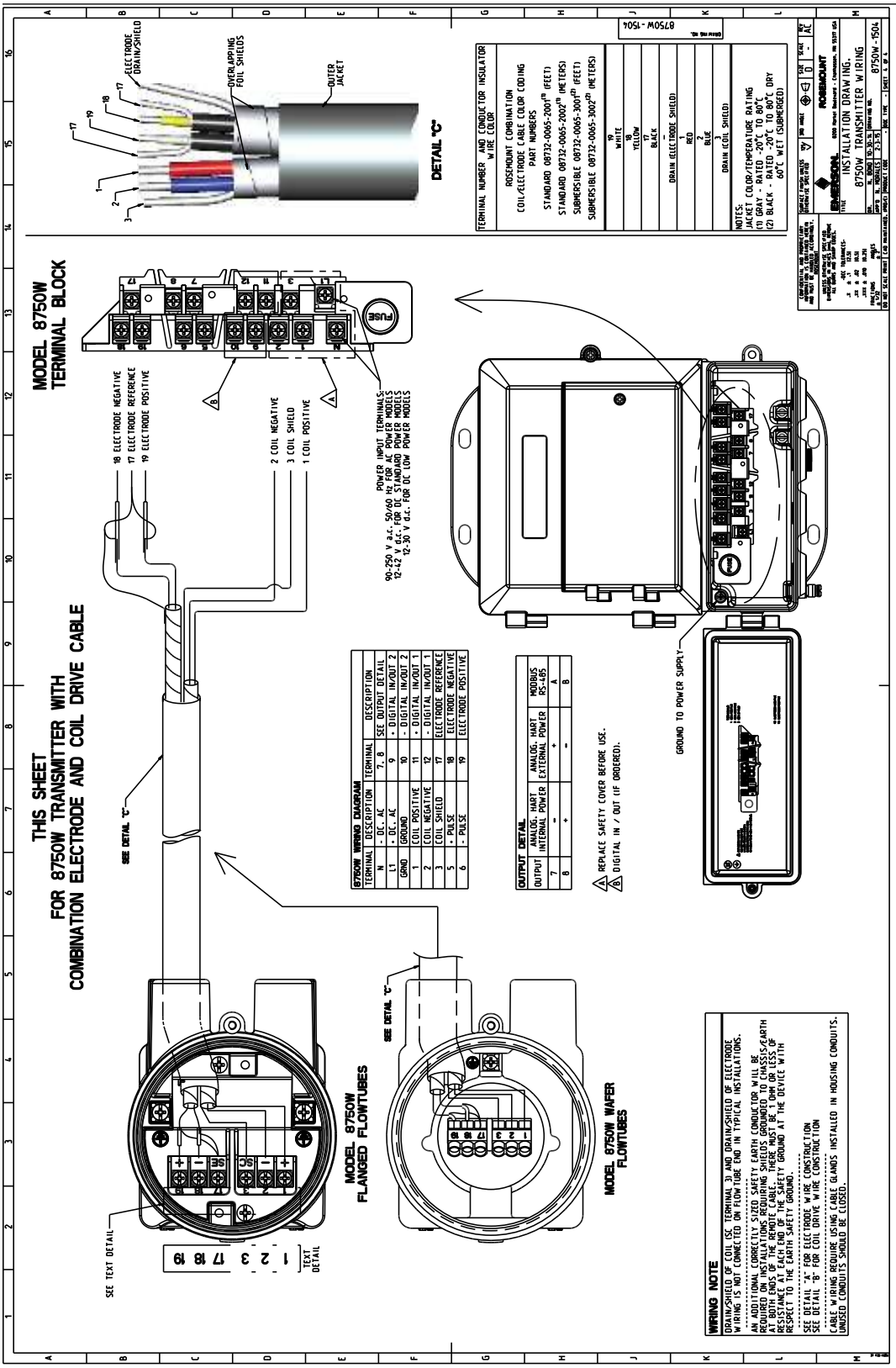
MODEL 8750W
TERMINAL BLOCK
THIS SHEET
FOR 8750W TRANSMITTER WITH
COMBINATION ELECTRODE AND COIL DRIVE CABLE
DETAIL "C"
ELECTRODE DRAIN/SHIELD
OVERLAPPING FOIL SHIELDS
OUTER JACKET
TERMINAL NUMBER AND CONDUCTOR INSULATOR WIRE COLOR
ROSEMOUNT COIL/ELECTRODE CABLE COLOR CODING PART NUMBERS
STANDARD 08732-0065-2001 (FEET)
STANDARD 08732-0065-2002 (METERS)
SUBMERSIBLE 08732-0065-3001 (FEET)
SUBMERSIBLE 08732-0065-3002 (METERS)
19 WHITE
18 YELLOW
17 BLACK
DRAIN (ELECTRODE SHIELD)
1 RED
2 BLUE
3 DRAIN (COIL SHIELD)
NOTES:
JACKET COLOR/TEMPERATURE RATING
(1) GRAY - RATED -20°C TO 80°C DRY
(2) BLACK - RATED -20°C TO 80°C DRY
60°C WET (SUBMERGED)
8750W - 1504
ROSEMOUNT
INSTALLATION DRAWING.
8750W TRANSMITTER WIRING
8750W - 1504
18 ELECTRODE NEGATIVE
17 ELECTRODE REFERENCE
19 ELECTRODE POSITIVE
2 COIL NEGATIVE
3 COIL SHIELD
1 COIL POSITIVE
POWER INPUT TERMINALS
90-250 V a.c. 50/60 Hz FOR AC POWER MODELS
12-42 V d.c. FOR DC STANDARD POWER MODELS
12-36 V d.c. FOR DC LOW POWER MODELS
FUSE
SEE DETAIL "C"
8750W WIRING DIAGRAM
TERMINAL | DESCRIPTION | TERMINAL | DESCRIPTION
N - DC, AC | 7, 8 | SEE OUTPUT DETAIL
L1 - DC, AC | 9 | - DIGITAL IN/OUT 2
GRND GROUND | 10 | - DIGITAL IN/OUT 2
1 COIL POSITIVE | 11 | - DIGITAL IN/OUT 1
2 COIL NEGATIVE | 12 | - DIGITAL IN/OUT 1
3 COIL SHIELD | 17 | ELECTRODE REFERENCE
5 - PULSE | 18 | ELECTRODE NEGATIVE
6 - PULSE | 19 | ELECTRODE POSITIVE
OUTPUT DETAIL
OUTPUT | ANALOG, HART INTERNAL POWER | ANALOG, HART EXTERNAL POWER | MODBUS RS-485
7 | - | + | A
8 | + | - | B
⚠ REPLACE SAFETY COVER BEFORE USE.
⚠ DIGITAL IN / OUT (IF ORDERED).
GROUND TO POWER SUPPLY
SEE TEXT DETAIL
1 2 3 17 18 19
TEXT DETAIL
MODEL 8750W
FLANGED FLOWTUBES
SEE DETAIL "C"
MODEL 8750W WAFER
FLOWTUBES
WIRING NOTE
DRAIN/SHIELD OF COIL (SC TERMINAL 3) AND DRAIN/SHIELD OF ELECTRODE WIRING IS NOT CONNECTED ON FLOWTUBE END IN TYPICAL INSTALLATIONS.
AN ADDITIONAL CORRECTLY SIZED SAFETY EARTH CONDUCTOR WILL BE REQUIRED ON INSTALLATIONS REQUIRING SHIELDS GROUNDED TO CHASSIS/EARTH AT BOTH ENDS. IN THESE CASES, THERE MUST BE 1 OHM OR LESS OF RESISTANCE BETWEEN THE REMOTE CABLE SHIELD AND THE DEVICE WITH RESPECT TO THE EARTH SAFETY GROUND.
SEE DETAIL "A" FOR ELECTRODE WIRE CONSTRUCTION.
SEE DETAIL "B" FOR COIL DRIVE WIRE CONSTRUCTION
CABLE WIRING REQUIRE USING CABLE GLANDS INSTALLED IN HOUSING CONDUITS. UNUSED CONDUITS SHOULD BE CLOSED.

C.2 775 Smart Wireless THUM™ Adapter wiring diagrams (field mount)

Figure C-1: Wiring diagram—775 Smart Wireless THUM Adapter with transmitter internal analog power

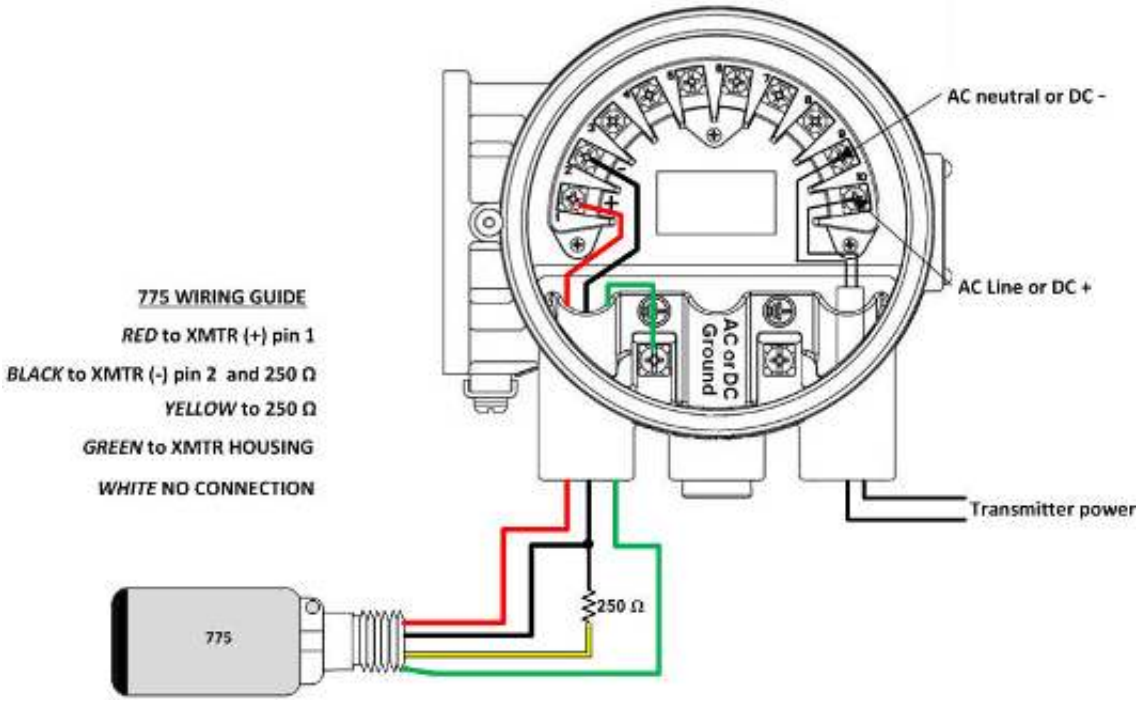

Figure C-2: Wiring diagram—775 Smart Wireless THUM Adapter with transmitter external analog power

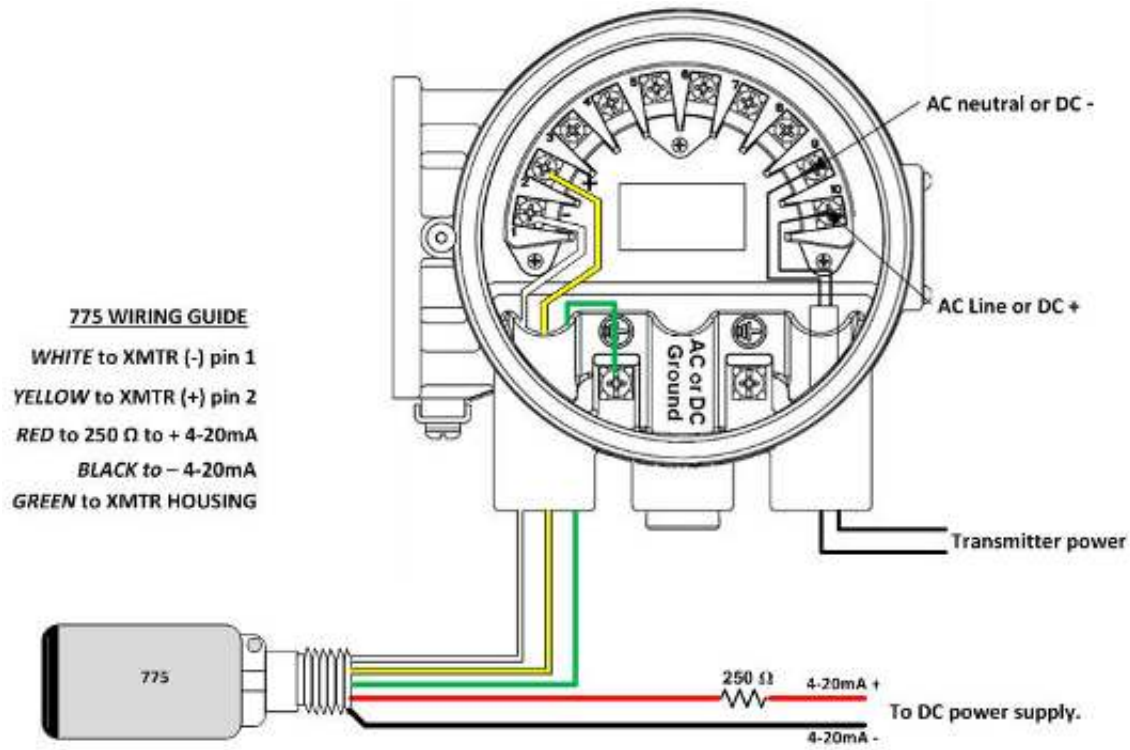

C.3 775 Smart Wireless THUM™ Adapter wiring diagrams (wall mount)

Figure C-3: Wiring diagram—775 Smart Wireless THUM Adapter with transmitter internal analog power

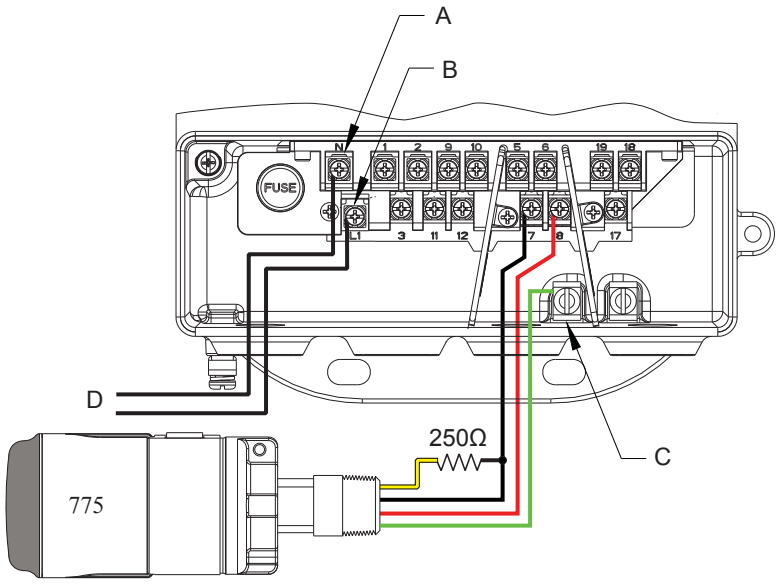

A. AC neutral or DC -
B. AC Line or DC +
C. AC or DC Ground
D. Transmitter Power

Table C-1: 775 wiring guide

Wire color	Connect to...
Red	Transmitter (+) pin 8
Black	Transmitter (–) pin 7 and 250Ω
Yellow	250Ω
Green	Transmitter housing
White	No connection

Figure C-4: Wiring diagram—775 Smart Wireless THUM Adapter with 8712EM external analog power

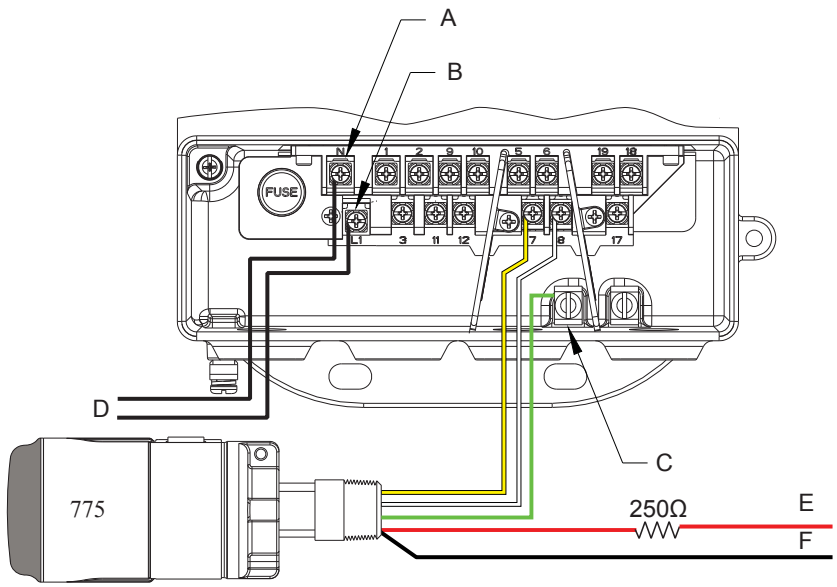

A. AC neutral or DC -
B. AC Line or DC +
C. AC or DC Ground
D. Transmitter Power
E. 4–20mA +
F. 4–20mA –

Table C-2: 775 wiring guide

Wire color	Connect to...
Red	Transmitter (+) pin 8
Black	Transmitter (–) pin 7 and 250Ω
Yellow	250Ω
Green	Transmitter housing
White	No connection

C.4 475 Field Communicator wiring diagrams (field mount)

Figure C-5: Wiring diagram—475 Field Communicator with transmitter internal analog power

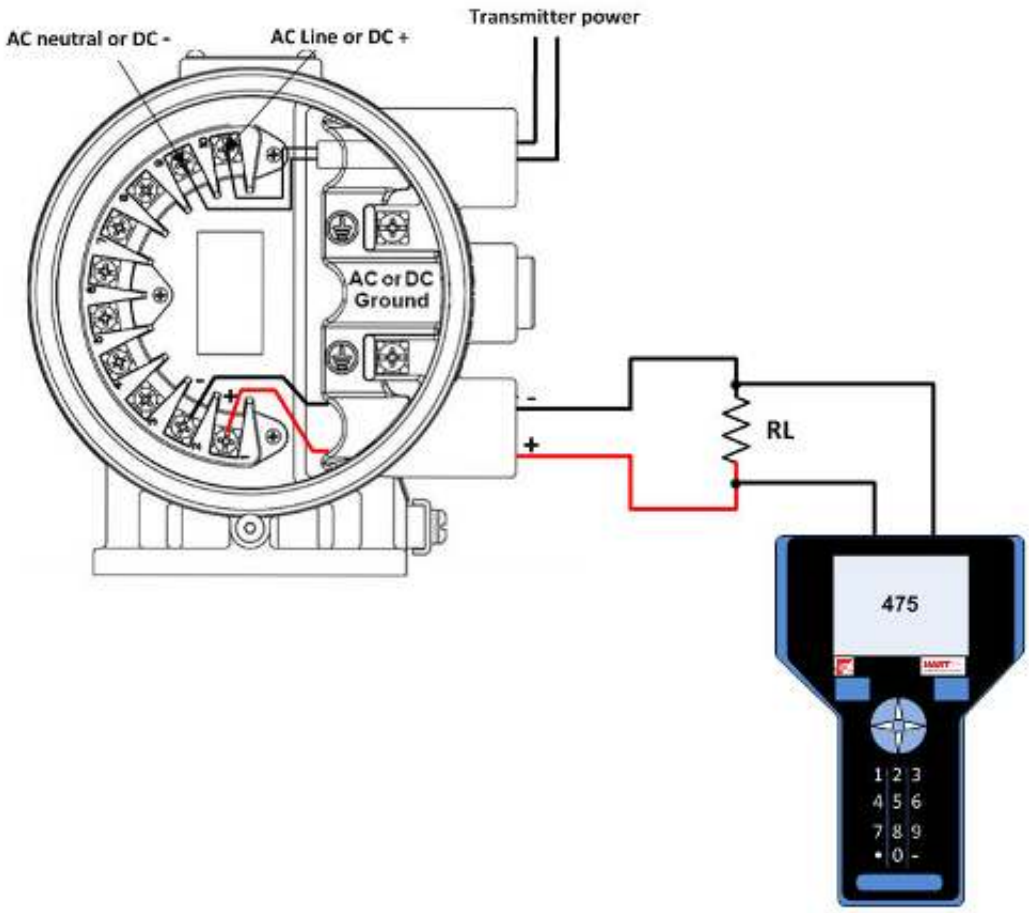

Figure C-6: Wiring diagram—475 Field Communicator with transmitter external analog power

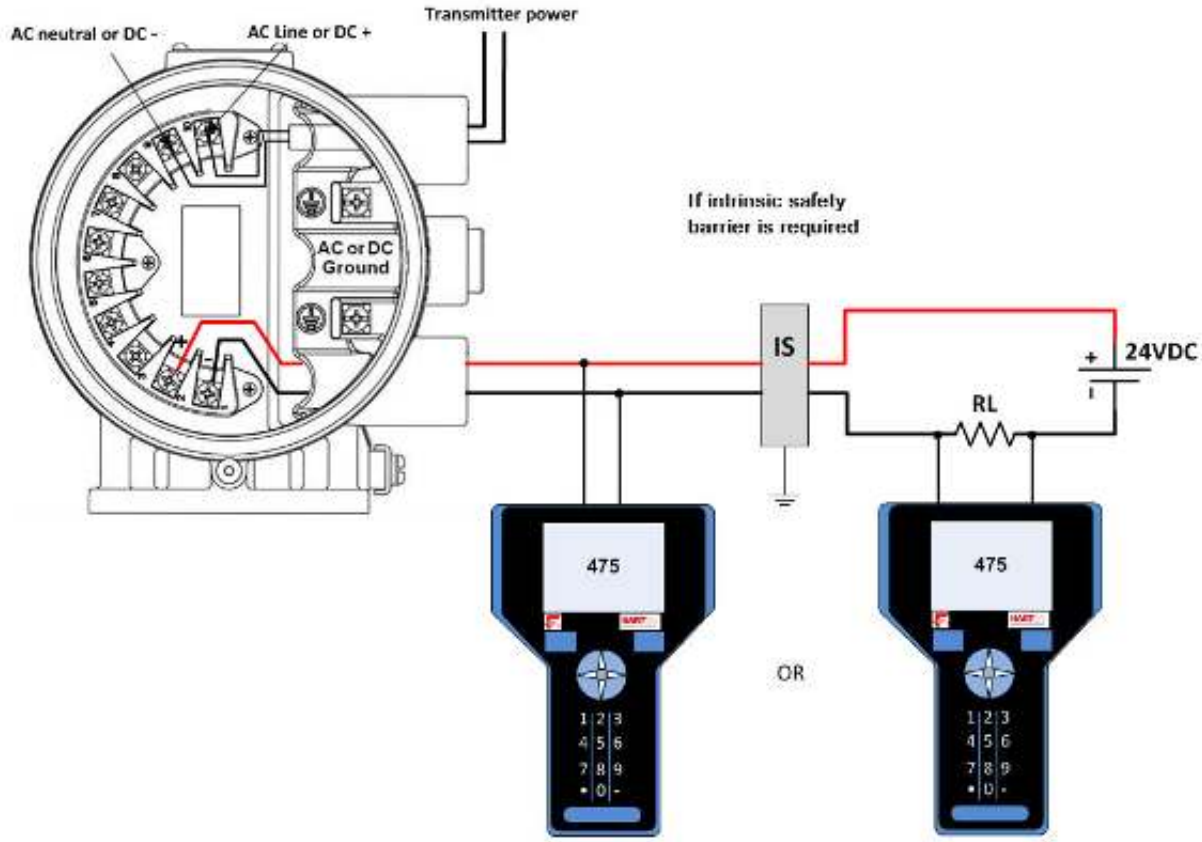

C.5 Field Communicator wiring diagrams (wall mount)

Figure C-7: Wiring diagram—Field Communicator with transmitter internal analog power

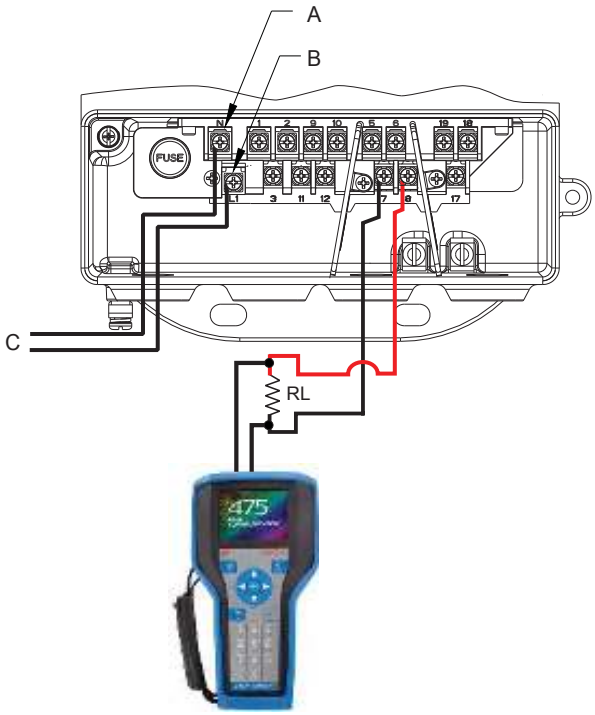

A. AC neutral or DC–
B. AC line or DC +
C. Transmitter power

Figure C-8: Wiring diagram—Field Communicator with transmitter external analog power

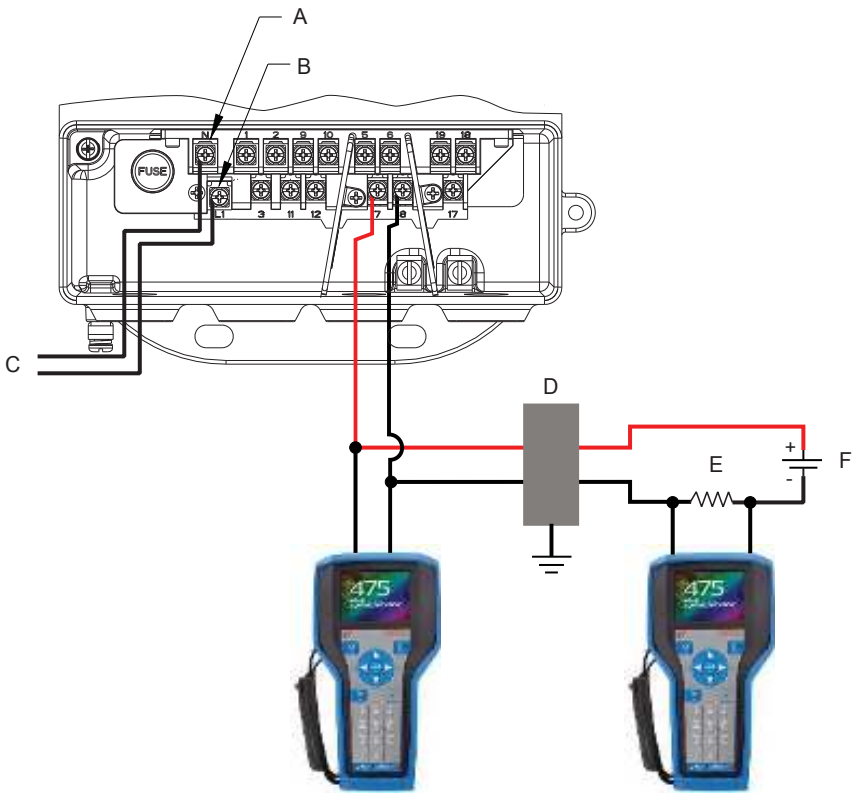

A. AC neutral or DC–
B. AC line or DC +
C. Transmitter power
D. Intrinsic safety barrier, if required.
E. RL
F. 24 VDC

00809-0100-4750
Rev AA
2018

Emerson Automation Solutions USA
7070 Winchester Circle
Boulder, Colorado USA 80301
T +1 303-527-5200
T +1 800-522-6277
F +1 303-530-8459
www.emerson.com

Emerson Automation Solutions Europe
Neonstraat 1
6718 WX Ede
The Netherlands
T +31 (0) 70 413 6666
F +31 (0) 318 495 556
www.micromotion.nl

Emerson Automation Solutions Asia
1 Pandan Crescent
Singapore 128461
Republic of Singapore
T +65 6777-8211
F +65 6770-8003

Emerson Automation Solutions United Kingdom
Emerson Process Management Limited
Horsfield Way
Bredbury Industrial Estate
Stockport SK6 2SU U.K.
T +44 0870 240 1978
F +44 0800 966 181

Emerson Automation Solutions Japan
1-2-5, Higashi Shinagawa
Shinagawa-ku
Tokyo 140-0002 Japan
T +81 3 5769-6803
F +81 3 5769-6844

©2018 Rosemount, Inc. All rights reserved.

The Emerson logo is a trademark and service mark of Emerson Electric Co. Rosemount, 8600, 8700, 8800 marks are marks of one of the Emerson Automation Solutions family of companies. All other marks are property of their respective owners.

ROSEMOUNT™

EMERSON™