Reference Manual
00809-0100-4810, Rev EC
May 2015

Rosemount Compact Flowmeters



ROSEMOUNT®

EMERSON™
Process Management

Rosemount Compact Flowmeters

NOTICE

Read this manual before working with the product. For personal and system safety, and for optimum product performance, make sure you thoroughly understand the contents before installing, using, or maintaining this product.

The United States has two toll-free assistance numbers and one International number.

Customer Central
1-800-999-9307 (7:00 a.m. to 7:00 P.M. CST)

International
1-(952) 906-8888

National Response Center
1-800-654-7768 (24 hours a day)
Equipment service needs

⚠ CAUTION

The products described in this document are NOT designed for nuclear-qualified applications. Using non-nuclear qualified products in applications that require nuclear-qualified hardware or products may cause inaccurate readings.

For information on Emerson Process Management nuclear-qualified products, contact your local Emerson Process Management Sales Representative.

Contents

Section 1: Introduction

1.1 Transmitter information 1
1.2 Receiving and inspection 1
1.3 Returning the product 1
1.4 Considerations 2
1.4.1 Functional 2

Section 2: Installation

2.1 Safety messages 3
2.2 Installation 4
2.2.1 Flowchart 4
2.2.2 Handling 5
2.2.3 Straight run requirements 5
2.2.4 Bolting a transmitter to the Rosemount 405 6
2.3 Location and orientation 8
2.3.1 Liquid - Rosemount 405C, 405P, and 405A 8
2.3.2 Gas - Rosemount 405C, 405P, and 405A 9
2.3.3 Steam - Rosemount 405C, 405P, and 405A 10
2.3.4 Top mounting for steam 11
2.3.5 Process Connections (Remote Mount Only) 12
2.4 405 Installation 14
2.4.1 Recommended insulation guidelines 15
2.4.2 Remote RTD installation 16

Section 3: Commissioning

3.1 Safety messages 17
3.2 Direct mount applications 18
3.2.1 Liquid service 18
3.2.2 Gas service 19
3.2.3 Steam service 20
3.3 Remote mount applications 21
3.3.1 Liquid service 21
3.3.2 Gas service 22
3.3.3 Steam service 23

Section 4: Operation and Maintenance

4.1 Safety messages 25
4.2 Troubleshooting 26
4.3 RTD maintenance 28
4.3.1 Replacing an RTD 28
4.3.2 Direct Mount for Compact Conditioning and Standard Orifice 31
4.3.3 Electrical RTD check procedure 31

Appendix A: Reference Data

A.1 Ordering information 33
A.1.1 Rosemount 3051SF performance specifications 52
A.1.2 Rosemount 3051CF performance specifications 55
A.1.3 Rosemount 2051CF performance specifications 57
A.1.4 Rosemount 3051SF functional specifications 58
A.1.5 Rosemount 3051CF functional specifications 66
A.1.6 Rosemount 2051CF functional specifications 73
A.1.7 Rosemount 3051SF physical specifications 82
A.1.8 Rosemount 3051CF physical specifications 84
A.1.9 Rosemount 2051CF physical specifications 86
A.2 Specifications 91
A.2.1 Rosemount 405 performance specifications 91
A.2.2 Rosemount 405 functional specifications 91
A.2.3 Rosemount 405 physical specifications 93
A.2.4 Installation consideration 96
A.3 Dimensional drawings 98
A.3.1Rosemount 3051 SFC Compact Flowmeter 98
A.3.2Rosemount 3051 CFC Compact Flowmeter 99
A.3.3Rosemount 2051 CFC Compact Flowmeter 100
A.3.4Rosemount 405 Compact Orifice Primary Element 101
A.4 Spare parts 103

Appendix B: Product Certifications

B.1 Rosemount 3051SF Measurement Type D Certifications 109

Section 1 Introduction

1.1 Transmitter information

If the 405 Primary Element was ordered assembled to a Rosemount 3051S Transmitter, the new assembly is the Rosemount 3051SFC Compact Flowmeter. See the Rosemount 3051S Series Pressure Transmitter Reference Manual (document number 00809-0100-4801) for information regarding transmitter installation, configuration, and operation.

If the 405 Primary Element was ordered assembled to a Rosemount 3051S MultiVariable transmitter, the new assembly is the Rosemount 3051SFC Compact Mass Flowmeter. See the Rosemount 3051S MultiVariable Mass Flow Transmitter Reference Manual (document number 00809-0100-4803) for information regarding transmitter installation, configuration, and operation.

If the 405 Primary Element was ordered assembled to a Rosemount 3051 Transmitter, the new assembly is the Rosemount 3051CFC Compact Flowmeter. See the Rosemount 3051 Pressure Transmitter Reference Manual (document number 00809-0100-4001) for information regarding transmitter installation, configuration, and operation.

If the 405 Primary Element was ordered assembled to a Rosemount 2051 Transmitter, the new assembly is the Rosemount 2051CFC Compact Flowmeter. See the Rosemount 2051 Pressure Transmitter Reference Manual (document number 00809-0100-4101) for information regarding transmitter installation, configuration, and operation.

1.2 Receiving and inspection

Flowmeters are available in different models and with different options, so it is important to inspect and verify that the appropriate model was delivered before installation.

Upon receipt of the shipment, check the packing list against the material received and the purchase order. All items are tagged with a model number, serial number, and customer tag number. Report any damage to the carrier.

1.3 Returning the product

To expedite the return process, call the Rosemount National Response Center toll-free at 800-654-7768. This center, available 24 hours a day, will assist you with any needed information or materials.

The center will ask for:

- Product model
- Serial numbers
- The last process material to which the product was exposed

⚠ The center will provide:

- A Return Material Authorization (RMA) number
- Instructions and procedures that are necessary to return goods that were exposed to hazardous substances

Note
If a hazardous substance is identified, a Material Safety Data Sheet (MSDS), required by law to be available to people exposed to specific hazardous substances, must be included with the returned materials.

1.4 Considerations

1.4.1 Functional

The Rosemount 405 produces the most accurate and repeatable measurement when it is used in single-phase flow or steam flow above the saturation temperature. Location of the 405 in pulsating flow will cause a noisy signal. Vibration can also distort the output signal and compromise the structural limits of the flowmeter.

Mount the 405 in a secure run of pipe as far as possible from pulsation sources such as check valves, reciprocating compressors or pumps, and control valves.

Install the 405 in the correct location within the piping branch to prevent measurement inaccuracies caused by flow disturbances.

Maximum temperature for direct mount applications is 450 °F (232 °C). Maximum temperature for remote mount applications is 850 °F (454 °C).

Vibration limits

Qualified per IEC61298-3 (2008) for field with general application or pipeline with low vibration level (10-1000 Hz test frequency range, 0.15 mm displacement peak amplitude, 20 m/s^2 acceleration amplitude). The weight and length of the transmitter assembly shall not exceed 9.8 lbs (4.45 kg) and 8.60-in. (218.44 mm).

Section 2 Installation

Safety messages ..... page 3
Installation ..... page 4
Location and orientation ..... page 8
405 installation ..... page 14

2.1 Safety messages

Instructions and procedures in this section may require special precautions to ensure the safety of the personnel performing the operations. Refer to the following safety messages before performing any operation in this section.

⚠ WARNING

Explosions could result in death or serious injury.

- Do not remove the transmitter cover in explosive atmospheres when the circuit is live.
- Before connecting a HART® Communicator in an explosive atmosphere, make sure the instruments in the loop are installed in accordance with intrinsically safe or nonincendive field wiring practices.
- Verify that the operating atmosphere of the transmitter is consistent with the appropriate hazardous locations certifications.
- Both transmitter covers must be fully engaged to meet explosion-proof requirements.

Failure to follow these installation guidelines could result in death or serious injury.

- Make sure only qualified personnel perform the installation.

The product may be hot while in service, potentially causing burns. Handle with care.

2.2 Installation

2.2.1 Flowchart

Figure 2-1 is an installation flowchart that provides guidance through the installation process. Following the figure, an installation checklist has been provided to verify that all critical steps have been taken in the installation process. The checklist numbers are indicated in the flowchart.

Figure 2-1. Commissioning Chart

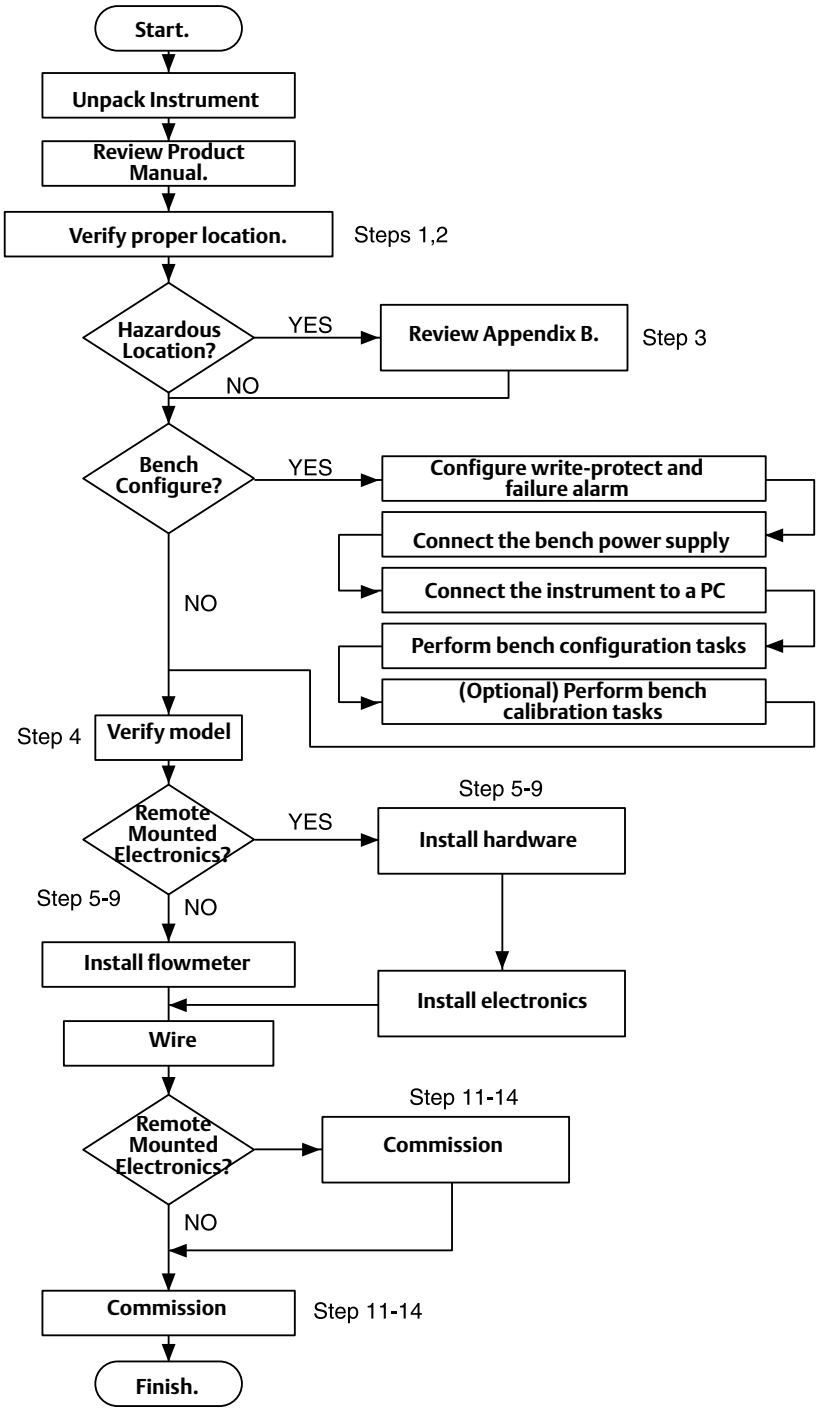

2.2.2 Handling

The product tag is not designed to withstand the weight of the flowmeter - do not lift the product by the tag.

Do not lift the product by the orifice holes. Holes have sharp edges that may cause personal injury. Lift the product by the neck tube connecting the orifice plate to manifold/transmitter assembly.

2.2.3 Straight run requirements

Table 2-1. 405C Straight Pipe Requirements(1)

	Beta	0.40	0.50	0.65
Upstream (inlet) side of primary	Reducer	2	2	2
	Single 90° bend or tee	2	2	2
	Two or more 90° bends in the same plane	2	2	2
	Two or more 90° bends in different planes	2	2	2
	Up to 10° of swirl	2	2	2
	Butterfly valve (75% to 100% open)	2	5	5
Downstream (outlet) side of primary		2	2	2

Table 2-2. 405P Straight Pipe Requirements(1)(2)

	Beta	0.40	0.50	0.65
Upstream (inlet) side of primary	Reducer	5	8	12
	Single 90° bend or tee	16	22	44
	Two or more 90° bends in the same plane	10	18	44
	Two or more 90° bends in different planes	50	75	60
	Expander	12	20	28
	Ball / Gate valve fully open	12	12	18
Downstream (outlet) side of primary		6	6	7

Table 2-3. 405A Straight Run Requirements(1)

		Without straightening vane		With straightening vane(3)	
	Annubar® averaging pitot tube - sensor Size 1	**In plane(4)**	**Out of plane(4)**	**From disturbance**	**From straightening vane**
Upstream (inlet) side of primary	Reducer	12	12	8	4
	Expander	18	18	8	4
	Single 90° bend or tee	8	10	8	4
	Two or more 90 ° bends in the same plane	11	16	8	4
	Two or more 90° bends in different planes	23	28	8	4
	Butterfly Valve (75-100% open)	30	30	8	4
	Ball/Gate Valve fully open	8	10	8	4
Downstream (outlet) side of primary		4	4	4	4

(1) Consult an Emerson Process Management representative if a disturbance is not listed.
(2) If using flow straighteners, refer to ISO 5167 for recommended links.
(3) Use straightening vane to reduce the required straight run length.
(4) In Plane means the Annubar is in the same plane as the elbow. Out of Plane means the bar is perpendicular to the plane of the upstream elbow. Refer to Figure 2-2 on page 6.

Figure 2-2. Compact Annubar Flowmeter In Plane and Out of Plane

In plane **Out of plane**

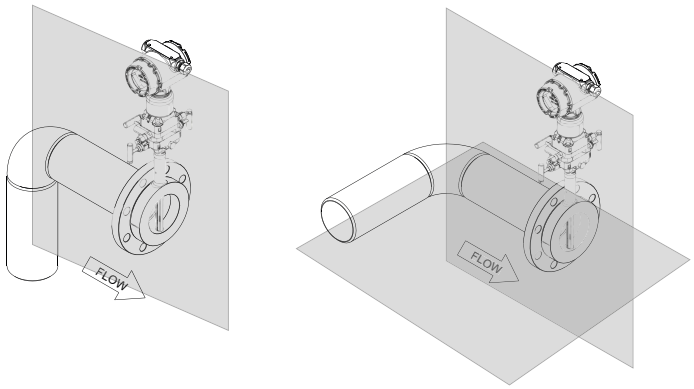

Note
The above figure depicts in plane and out of plane orientations only. Refer to Table 2-3 on page 5 for recommended straight run requirements

2.2.4 Bolting a transmitter to the Rosemount 405

If the Rosemount 405 is ordered separately from the Rosemount transmitter and will be used in a direct mount configuration, it will need to be assembled to the transmitter. Follow the directions below to assemble the 405 to a transmitter with a coplanar configuration.

Note
Units shipped from the factory direct mounted are pressure tested and characterized with the primary attached. Factory assembly is recommended for best performance.

1. Remove the body bolts (4) from the transmitter.
2. Remove the socket head cap screws from the bottom of the coplanar flange and remove the coplanar flange.

Note
Protect the transmitter sensing diaphragms and do not remove the O-rings in transmitter sensor module.

3. Carefully assemble the 405 to the pressure transmitter sensor making sure the “H” and “L” on transmitter and primary match.
4. Use studs and nuts supplied with the 405 to connect the transmitter sensor to the manifold head of the 405.
5. Preload to 150 lbs/in. then final torque at 300 lbs/in. Tighten evenly in a cross pattern.

Figure 2-3. Bolting the 405 to a Transmitter

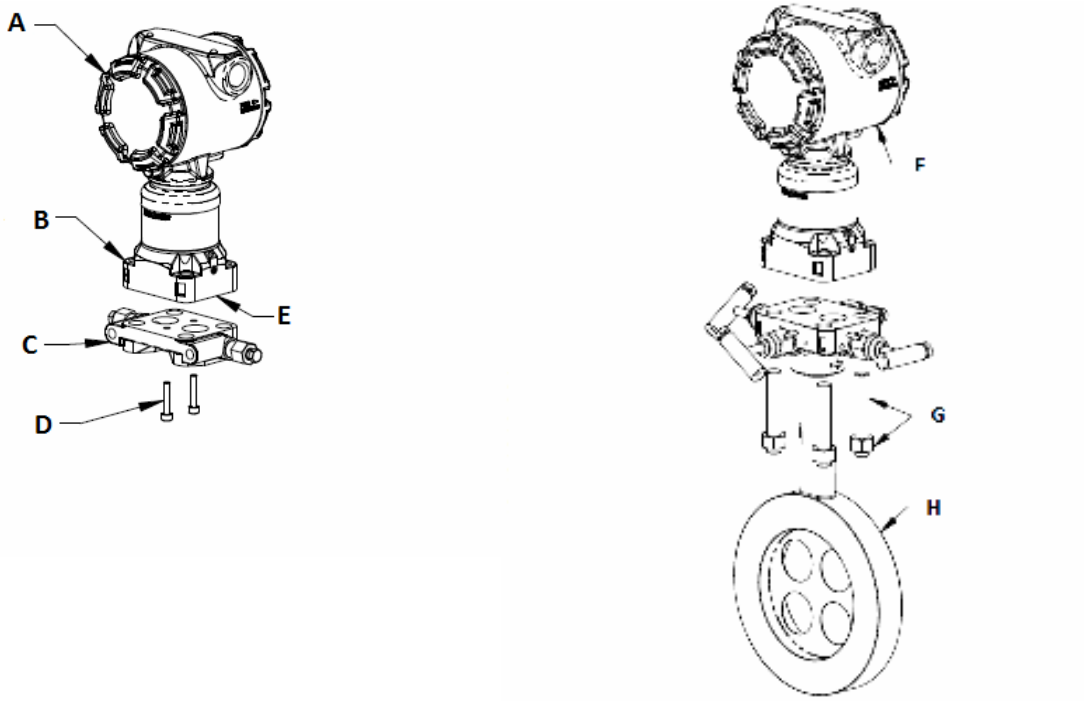

A. Transmitter	E. Sensing diaphragms and O-rings (do not disturb or remove)
B. Sensing module	F. Transmitter
C. Coplanar flange	G. Studs and nuts
D. Flange screws	H. Rosemount 405

2.3 Location and orientation

The primary element can be installed in any position around the circumference of the pipe, provided the vents are positioned properly for bleeding or venting. Optimal results for liquid in a vertical line or steam are obtained when flow is up.

Note
The maximum acceptable temperature for direct mounting is 450 °F (232 C°). Refer to "Location and orientation" on page 8 if the process could potentially exceed this temperature.

2.3.1 Liquid - Rosemount 405C, 405P, and 405A

Note
The 405 should not be used in vertical liquid or steam applications if the fluid is flowing down.

Direct mount

Horizontal liquid

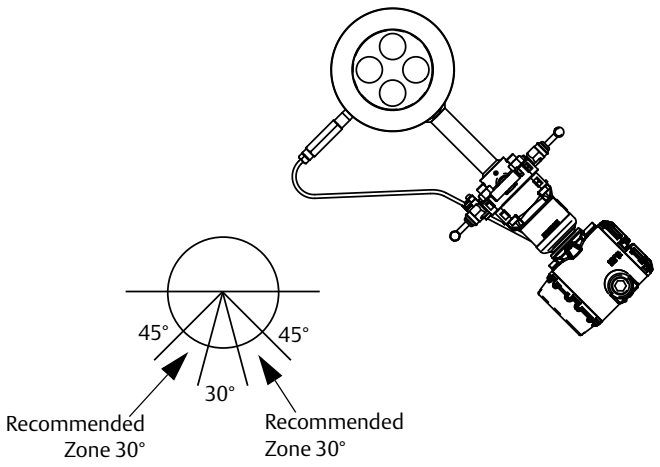

Remote mount

Horizontal liquid	Vertical liquid
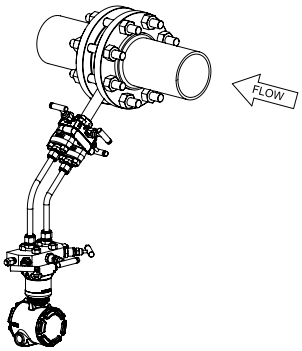	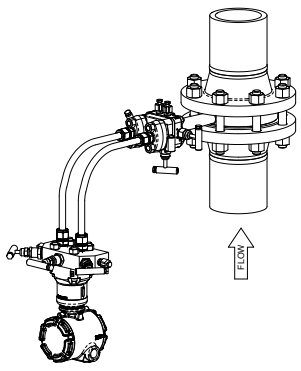

Vent location will depend on direction of flow. The vent is fixed to the downstream side.

2.3.2 Gas - Rosemount 405C, 405P, and 405A

Note
Due to drain vent orientation, a direct mount 405 should not be used in vertical gas applications if the fluid is flowing up. Consider remote mounting the pressure transmitter to facilitate condensate draining.

<table>
<tr><th colspan="2">Direct mount</th></tr>
<tr><th>Horizontal gas</th><th>Vertical gas</th></tr>
<tr><td>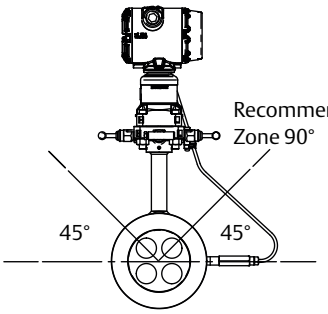
</td><td>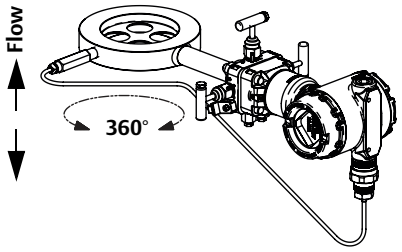
</td></tr>
<tr><th colspan="2">Remote mount</th></tr>
<tr><th>Horizontal gas</th><th>Vertical gas</th></tr>
<tr><td>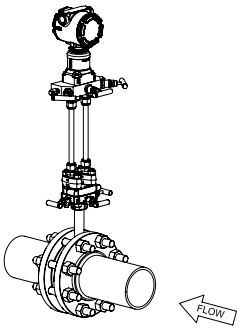
</td><td>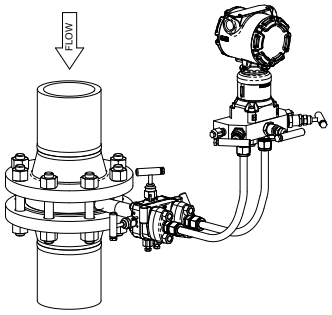
</td></tr>
</table>

⚠ WARNING

Gas in vertical pipes

The Rosemount 405 should be mounted with vents on bottom to allow condensate drainage.

2.3.3 Steam - Rosemount 405C, 405P, and 405A

Note
The 405 should not be used in vertical liquid or steam applications if the fluid is flowing down.

Direct mount

Horizontal steam

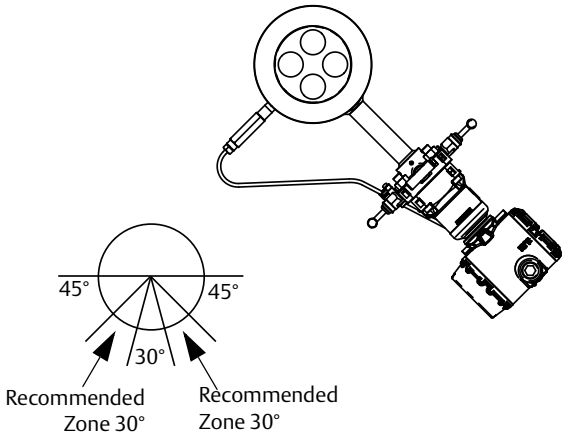

Remote mount

Horizontal steam	Vertical steam
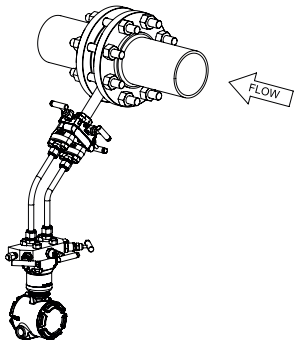	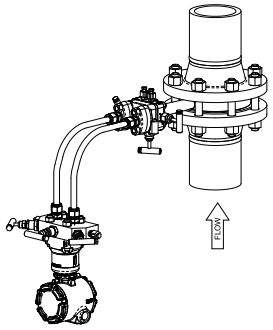

Note
For the 405A in steam applications, with DP readings in a low flow condition as low as 0.75 inH_2O in horizontal pipes consider installing the primary element/flowmeter in the Top Mounting for steam configuration.

2.3.4 Top mounting for steam

Top mounting in steam is an alternative mounting method for steam installations that can be used if there are space restrictions or other concerns. This installation method is intended for applications that run with limited interruptions or shutdowns. Also, for outdoor applications, top mounting can eliminate the need for heat tracing, if steam is flowing.

Direct mount - 405C, 405P, and 405A

Horizontal top mounting for steam up to 400 °F (204 °C)

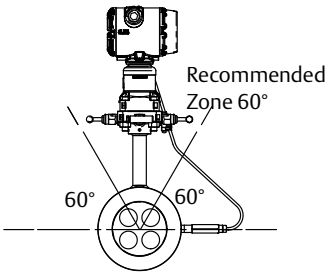

Note
For the 405A in wet steam applications, do not mount the flowmeter at the direct vertical position. Mounting at an angle will avoid measurement inaccuracy due to water running along the bottom of the pipe.

Remote mount up to 850 °F (454 °C) - 405C, 405P, and 405A

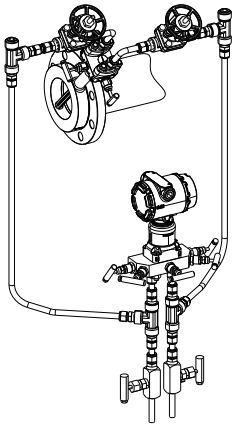

Note
When top mounting with a remote mount transmitter, use enough impulse piping to dissipate the process heat to avoid damaging the transmitter.

Suggested top mounting orientations: For steam up to 400 °F (204 °C) use direct mount orientation and for steam up to 850 °F (454 °C) use remote mount orientation. For direct mounting, ambient temperature should be less than 100 °F (38 °C). For remote mount installations, the impulse piping should slope up slightly from the instrument connections on the 405A Compact Annubar primary element to the cross fittings, allowing condensate to drain back into the pipe. From the cross fittings, the impulse piping should be routed downward to

the transmitter and the drain legs. The transmitter should be located below the instrument connections of the 405A Compact Annubar primary element.

For technologies C, P, and A, depending on the environmental conditions, it may be necessary to insulate the mounting hardware.

2.3.5 Process connections (remote mount only)

The 405 is available with either ¼-in. – 18 NPT connections (standard) or 1/2-in. – 14 NPT connections (option code E)(1). The 1/2-in. connections can be rotated to attain connection centers of 2-in. (51 mm), 2 1/8-in. (54 mm), or 2 1/4-in. (57 mm). The threads are Class 2; use a lubricant or sealant when making the process connections.

Ensure all four flange studs are installed and tightened prior to applying pressure to prevent process leakage. When properly installed, the flange studs will protrude through the top of the module housing.

Note
Do not attempt to loosen or remove the flange studs while the 405 is in service.

Perform the following to install flange adapters to the head of the 405.

⚠ 1. Place O-ring in the groove on bottom of the flange adapter.

2. Position flange adapters over NPT connections on the adapter plate.

3. Insert studs through 405 head, adapter plate, and flange adapters.

4. Thread nuts onto studs. Tighten nuts to 300 in-lbs. (34 N-m).

(1) The Rosemount 405A is only available with 1/2-in. - 14 NPT connections for remote mount transmitter connections.

Figure 2-4. Installing the Flange Adapters to a 405

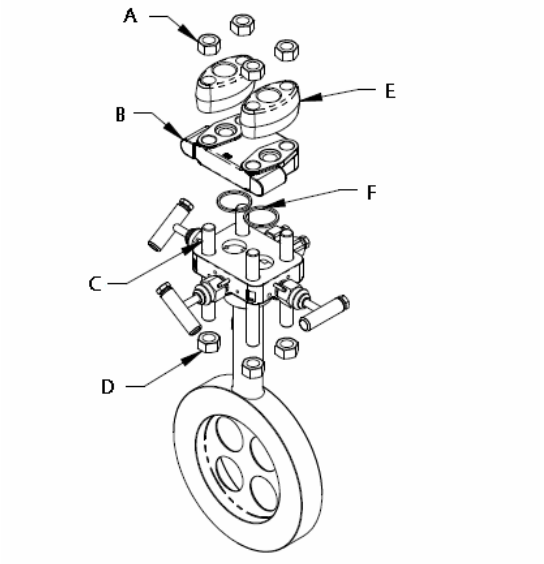

A. Nut	D. Nut
B. Adapter plate	E. Flange adapter
C. Stud	F. O-Ring

When compressed, PTFE O-rings tend to cold flow, which aids in their sealing capabilities. When removing adapter plates or adapters, visually inspect the O-rings. Replace them if there are any signs of damage, such as nicks or cuts. If they are undamaged, you may reuse them. If you replace the O-rings, retorque the nuts after installation to compensate for cold flow.

High temperature units (option code T)

⚠ Alloy O-rings should be replaced any time the unit is disassembled.

2.4 405 installation

Install the 405 according to the procedure below.

⚠ 1. Orient the assembly according to the guidelines provided in "Location and orientation" on page 8. Ensure the flow arrow is pointing in the same direction as the process flow.

Note
An ANSI alignment ring is provided standard with the 405. If a DIN or JIS alignment ring is required, it must be ordered as an option. Contact an Emerson Process Management sales representative for additional information.

Note
For ease of installation, the gasket may be secured to the flange face with small pieces of tape. Be sure the gasket and/or tape do not protrude into the pipe.

2. If using an alignment ring with through holes, proceed to Step 9.
3. Insert two studs through the flange holes located opposite the head of the 405.
4. Place the alignment ring on the 405 body (see Figure 2-5).
5. Insert gaskets.
6. Insert the 405 between the flanges so that the indentations on the alignment ring contact the installed studs. The studs must contact the alignment ring in the indentation marked with the appropriate flange rating to ensure proper alignment.
7. Install remaining studs and nuts (hand tight). Ensure that three of the studs are in contact with the alignment ring.
8. Lubricate studs and tighten nuts in a cross pattern to the appropriate torque per local standards.

Note
Step 9 through Step 12 are for use with alignment rings that have through holes.

9. Place the alignment ring on the 405 body (see Figure 2-5).
10. Insert the 405 between the flanges. Insert one stud through the flange hole located opposite the 405 head; passing through the alignment ring through hole and the opposite flange hole. The stud must contact the alignment ring through the through hole marked with the appropriate flange rating to ensure proper alignment.
11. Repeat Step 10 for a second (2) stud opposite the 405 head.
12. Insert gaskets.
13. Install remaining studs and nuts (hand tight). Ensure that three of the studs are in contact with the alignment ring.
14. Lubricate studs and tighten nuts in a cross pattern to the appropriate torque per local standards.

Note
Standard 1/16-in. gaskets are recommended for use with the 405. Using other gaskets could potentially caused a bias shift in the measurement.

2.4.1 Recommended insulation guidelines

For Flowmeters with integral temperature assembly:

It is recommended for the meter to be insulated when the process ambient temperature is greater than 30 °F (-1 °C).

1. For line sizes 1/2-in. (15 mm) to 4-in. (100 mm), it is recommended to have 4-in. (100 mm) of insulation of at least a 4.35 R-factor.

2. For line sizes 6-in. (150 mm) to 12-in. (300 mm), it is recommended to have 5-in. (125 mm) of insulation of at least a 4.35 R-factor.

The full thickness stated above may not be necessary for the entire flowmeter, but is required for the temperature sensor area at a minimum. Insulation is needed to ensure meeting our specified temperature measurement accuracy.

Figure 2-5. 405 Installation

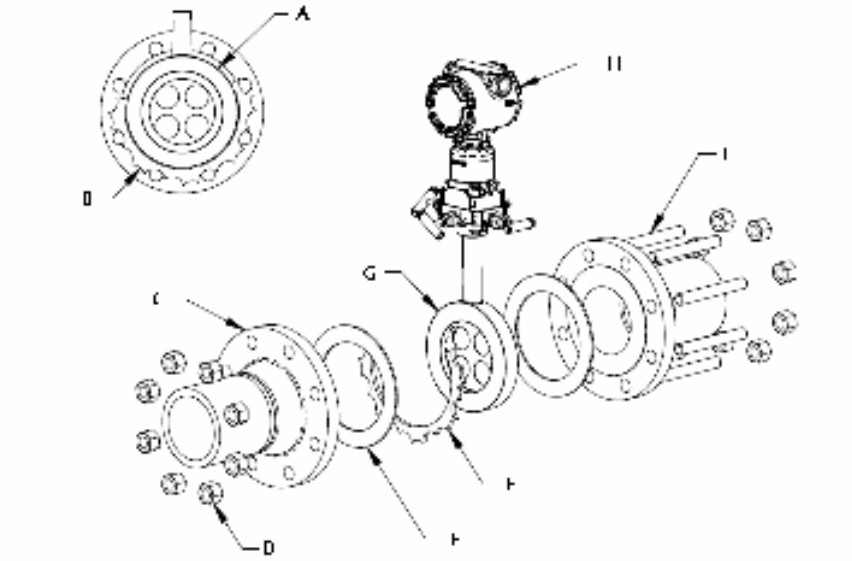

A. 405(1)
B. Alignment Ring
C. Existing Pipe Assembly with Flange
D. Nut
E. (2) Gasket
F. Alignment Ring
G. 405(1)
H. Transmitter(2)
I. Stud

(1) This installation drawing applies to the 405C, 405P, and 405A.
(2) The installation drawing applies when using the Rosemount 3051S, Rosemount 3051S MultiVariable, Rosemount 3051, and Rosemount 2051 Transmitter. See the following documents for quick installation instruction of the transmitters:
Rosemount 3051S MultiVariable Transmitter: document number 00825-0100-4803
Rosemount 3051S: document number 00825-0100-4801
Rosemount 3051: document number 00825-0100-4001
Rosemount 2051: document number 00825-0100-4101

2.4.2 Remote RTD installation

A remote RTD requires that the process piping be modified. Follow site specific requirements for installation. Install the RTD thermowell in close proximity downstream(1) of the primary element. The standard supplied RTD connection cable is 12 ft long. Consult factory for longer lengths.

Drill a 5/8-in. (16 mm) to 3/4-in. (19 mm) hole at the RTD location and weld on a customer supplied 1-in. (25 mm) tall 1/2 inch -14 NPT weld coupling. The RTD thermowell threads into the weld coupling. The thermowell material is 316 SST with 1/2–14 ANPT threads. When installed It will be inserted 1 1/2-in. (38 mm) into the pipe internal diameter.

For remote RTD applications with pipe diameters less than 2 inches (50 mm) consult factory.

(1) *For the 405P, at least six pipe diameters downstream of the primary element. For the 405C, two pipe diameters downstream of the primary element.*

Section 3 Commissioning

Safety messages . . . . . page 17
Direct mount applications . . . . . page 18
Remote mount applications . . . . . page 21

3.1 Safety messages

Instructions and procedures in this section may require special precautions to ensure the safety of the personnel performing the operations. Refer to the following safety messages before performing any operation in this section.

⚠ WARNING

Explosions could result in death or serious injury.

- Do not remove the transmitter cover in explosive atmospheres when the circuit is live.
- Before connecting a HART® Communicator in an explosive atmosphere, make sure the instruments in the loop are installed in accordance with intrinsically safe or nonincendive field wiring practices.
- Verify that the operating atmosphere of the transmitter is consistent with the appropriate hazardous locations certifications.
- Both transmitter covers must be fully engaged to meet explosion-proof requirements.

Failure to follow these installation guidelines could result in death or serious injury.

- Make sure only qualified personnel perform the installation.
- If the line is pressurized, serious injury or death could occur by opening valves.

3.2 Direct mount applications

3.2.1 Liquid service

⚠ 1. Pressurize line.

2. Open the equalizer valve.

3. Open the high and low side valves.

4. Bleed drain/vent valves until no gas is apparent in the liquid.

5. Close the vent/drain valves.

6. Close the low side valve.

7. Check transmitter zero according to the transmitter product manual so that the output on the test meter reads zero percent of span.

8. Close the equalizer valve.

9. Open the low side valve. The system is now operational.

Figure 3-1. Direct Mount Liquid Service

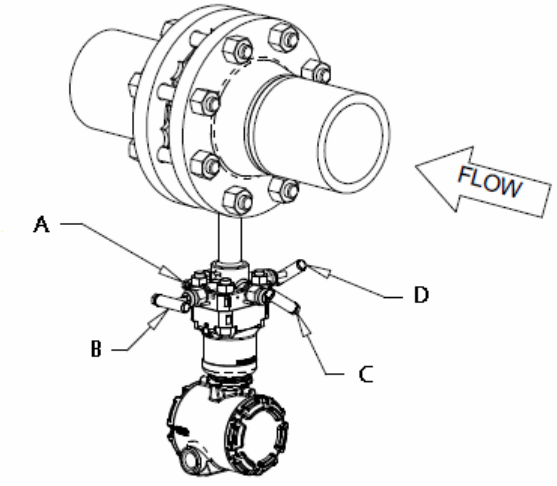

A. (2) Drain/Vent
B. Low Valve
C. Equalizer Valve
D. High Valve

3.2.2 Gas service

⚠ 1. Pressurize line.

2. Open the equalizer valve.
3. Open the high and low side valves.
4. Open drain/vent valves to ensure no liquid is present.
5. Close the vent/drain valves.
6. Close the low side valve.
7. Check transmitter zero according to the transmitter product manual so the output on the test meter reads zero percent of span.
8. Close the equalizer valve.
9. Open the low side valve. The system is now operational.

Figure 3-2. Direct Mount Gas Service

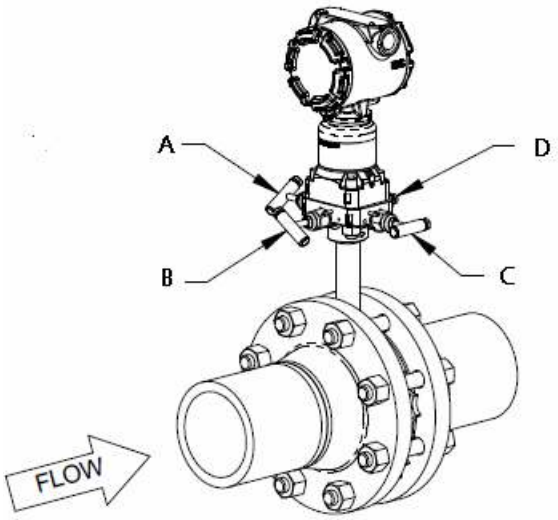

A. High Valve
B. Equalizer Valve
C. Low Valve
D. (2) Drain/Vent

3.2.3 Steam service

⚠ 1. Remove pressure from line.

2. Open equalizer, high, and low side valves.
3. Zero electronics.
4. Fill manifold and transmitter with water via drain vents.
5. Close low side valve to prevent possible heat damage to transmitter.
6. Pressurize line.
7. Gently tap electronics body, manifold head, and 405 body with a small wrench to dislodge any entrapped air.
8. Zero electronics.
9. Close the equalizer valve. Then open the low side valve.
10. The system is now operational.

Figure 3-3. Direct Mount Steam Service

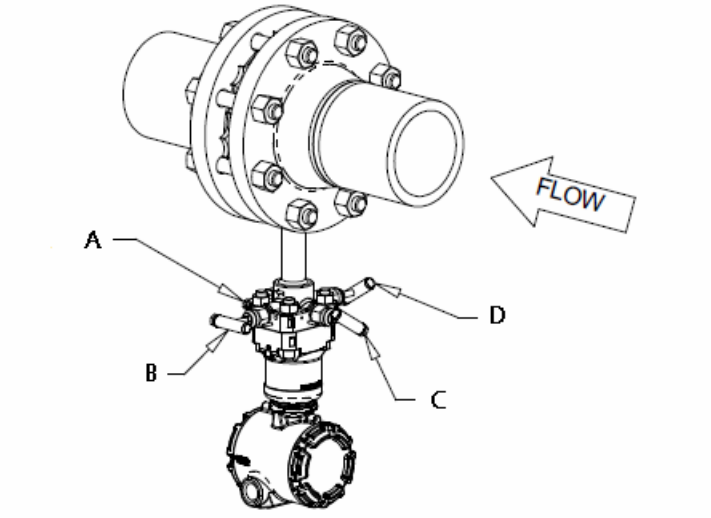

A. (2) Drain/Vent
B. Low Valve
C. Equalizer Valve
D. High Valve

3.3 Remote mount applications

3.3.1 Liquid service

⚠ 1. Zero electronics and pressurize line.

2. Open equalizer valves on transmitter manifold and 405.

3. Open high and low side transmitter manifold valves and 405 valves.

4. Bleed vent valves on transmitter manifold until no air is present.

5. Close vent valves.

6. Close equalizer valve on 405.

7. Check transmitter zero. If transmitter does not read zero repeat Step 1 through Step 7.

8. Close equalizer valve on transmitter manifold.

Figure 3-4. Remote Liquid Service

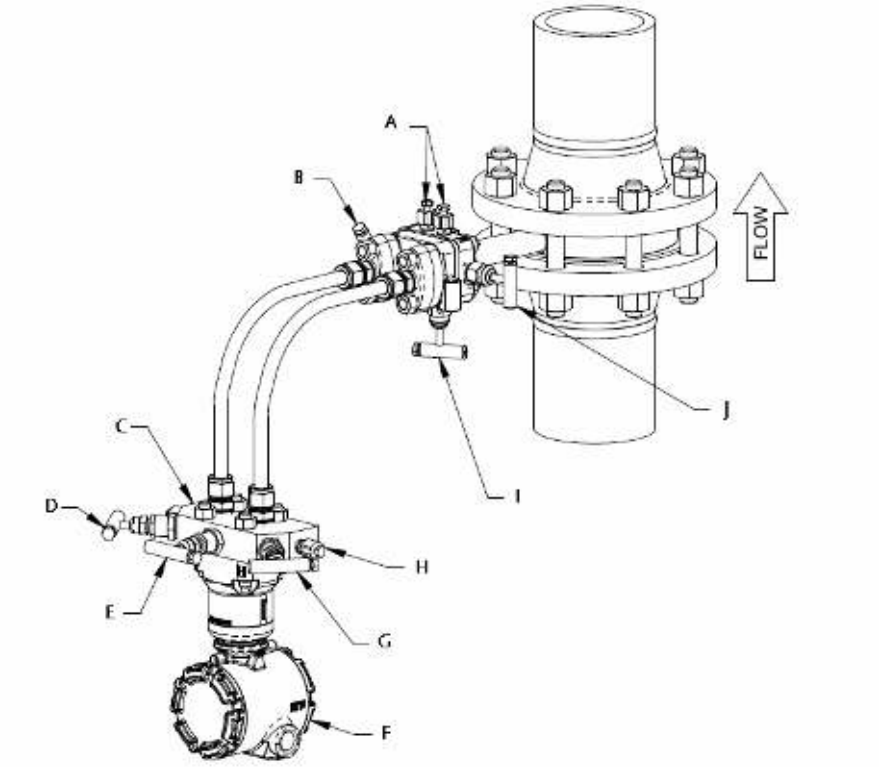

A. Vents
B. 405 High Valve
C. Transmitter Manifold
D. Manifold High Valve
E. Manifold Equalizer Valve
F. Transmitter
G. Manifold Low Valve
H. Manifold Vent
I. 405 Equalizer Valve
J. 405 Low Valve

3.3.2 Gas service

⚠ 1. Zero electronics and pressurize line.

2. Open equalizer valves on transmitter manifold and 405.
3. Open high and low side transmitter manifold valves and 405 valves.
4. Open drain/vent valves on transmitter manifold to ensure no liquids are present.
5. Close drain/vent valves.
6. Close low side transmitter manifold valve.
7. Close 405 equalizer valve.
8. Check transmitter zero. If transmitter does not read zero repeat Step 1 through Step 7.
9. Close equalizer on transmitter manifold.
10. Open low side valve on transmitter manifold. The system is now operational.

Figure 3-5. Remote Gas Service

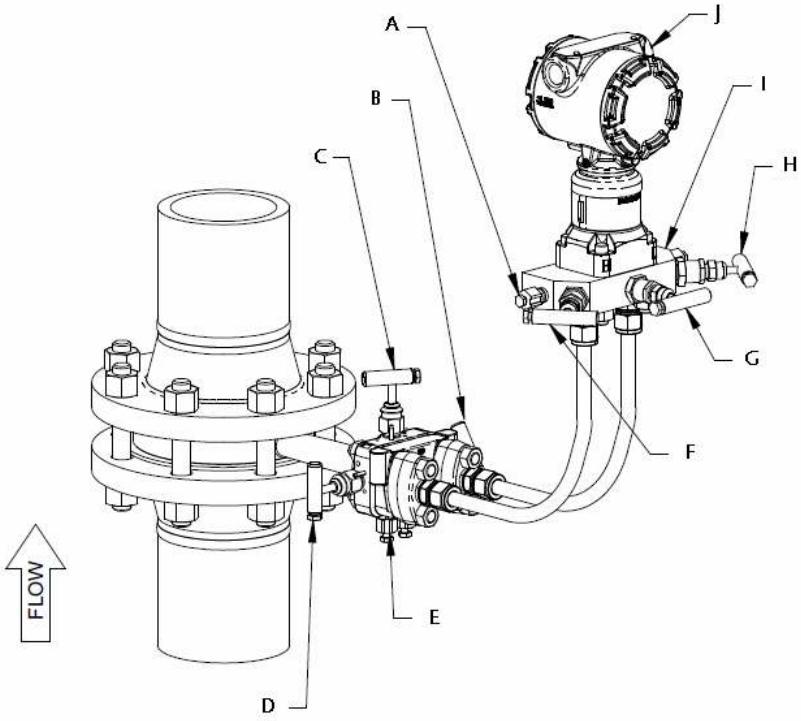

A. Manifold Vents
B. 405 Low Valve
C. 405 Equalizer Valve
D. 405 High Valve
E. Drain/Vents
F. Manifold High Valve
G. Manifold Equalizer Valve
H. Manifold Low Valve
I. Transmitter Manifold
J. Transmitter

3.3.3 Steam service

⚠ 1. Remove pressure from line.

2. Open equalizer valves, high side valves, and low side valves on both the 405 and transmitter manifold.

3. Zero electronics.

4. Fill transmitter manifold, instrument lines, and 405 with water via drain vents on transmitter manifold.

5. Close 405 equalizer valve and transmitter manifold vents.

6. Close low side transmitter manifold valve.

7. Pressurize line.

8. Gently tap electronics body, transmitter manifold, instrument lines, and 405 with a small wrench to dislodge any trapped air.

9. Check transmitter zero. If transmitter does not read zero repeat Step 4 through Step 8.

10. Close the transmitter equalizer and open low side valve on transmitter manifold. The system is now operational.

Figure 3-6. Remote Steam Service

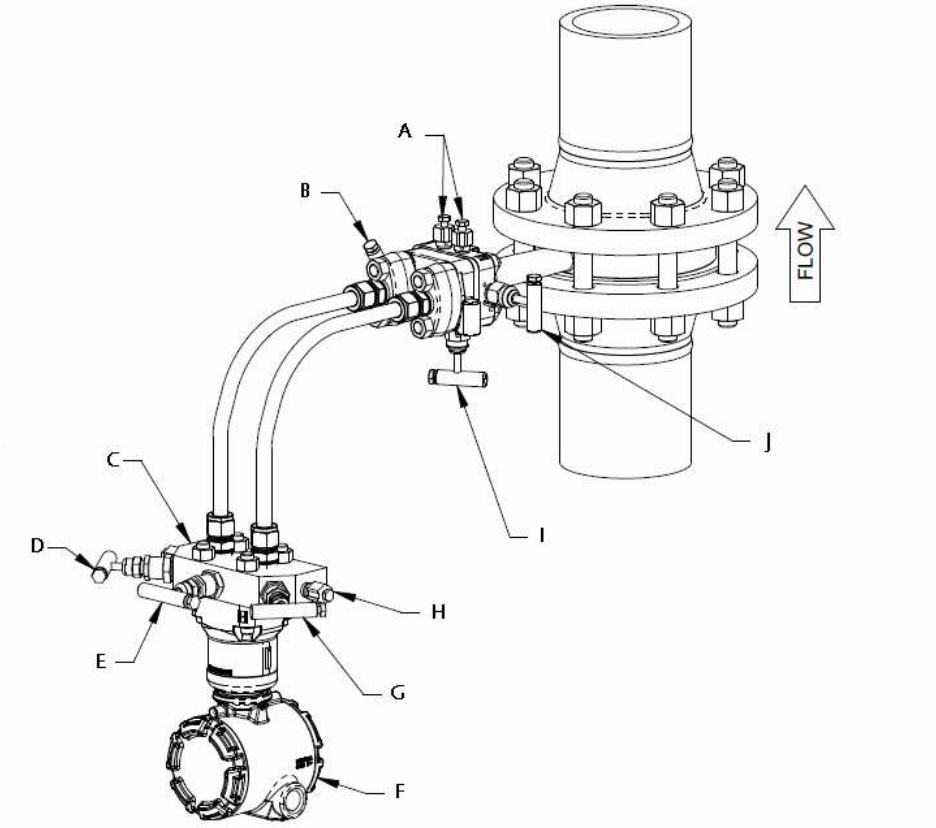

A. Drain/Vents
B. 405 High Valve
C. Transmitter Manifold
D. Manifold High Valve
E. Manifold Equalizer Valve
F. Transmitter
G. Manifold Low Valve
H. Manifold Vent
I. 405 Equalizer Valve
J. 405 Low Valve

Section 4 Operation and Maintenance

Safety messages . . . . . page 25
Troubleshooting . . . . . page 26
RTD maintenance . . . . . page 28

4.1 Safety messages

Procedures and instructions in this section may require special precautions to ensure the safety of the personnel performing the operations. Information that raises potential safety issues is indicated by a warning symbol (⚠). Refer to the following safety messages before performing an operation preceded by this symbol.

⚠ WARNING

Explosions can result in death or serious injury.

- Do not remove the instrument cover in explosive environments when the circuit is live.
- Both transmitter covers must be fully engaged to meet explosion-proof requirements.
- Before connecting a communicator in an explosive atmosphere, make sure the instruments in the loop are installed in accordance with intrinsically safe or nonincendive field wiring practices.

Electrical shock can result in death or serious injury.

- Avoid contact with the leads and the terminals.

4.2 Troubleshooting

If a malfunction is suspected despite the absence of a diagnostic messages on the communicator display, follow the procedures described below to verify that the flowmeter hardware and process connections are in good working order. Always approach the most likely and easiest-to-check conditions first.

Symptom	Possible cause	Corrective action
Questionable accuracy or erroneous flow signal	Improper installation	■ Is the flow arrow pointed in the direction of the flow? ■ Verify the cross reservoirs are perfectly level with one another. ■ Is there sufficient straight run upstream and downstream of the flowmeter?
	System leaks	Check for leaks in instrument piping. Repair and seal all leaks.
	Contamination/plugging	Remove the flowmeter and check for contamination.
	Closed valve	Verify that both Rosemount transmitter (PH & PL) or (MH & ML) valves are open. Verify that vent, equalizer, and line valves are properly positioned per the “start up procedure.”
	Calibration	Is the calibration too high or low for the flow rate?
	Connections (remote mount only)	Verify that the high side of the electronics is connected to the high side of the flowmeter. Check the same for the low side.
	Entrapped air (liquid applications)	Are there uneven water legs caused by air entrapment in the instrument connections? If so, bleed air.
	Rosemount transmitter misalignment	Misalignment of the flowmeter beyond 3 degrees will cause an erroneous signal.
	Operating conditions	Are the operating conditions in compliance with those given at the time the flowmeter was purchased? Check the flow calculation and the fluid parameters for accuracy. Double-check pipe inside diameter for proper sizing.
Spiking flow signal	Two-phase flow	The flowmeter is a head measurement device and will not accurately measure a two-phase flow.
Spiking flow signal (Stream Service)	Improper insulation (vertical pipes only) Excessive vibration	Added insulation may be required to ensure that a phase change occurs at the cross reservoirs. Check the impulse piping for vibration.
Milliamp reading is zero	No flow in system. Power polarity	■ Check if power polarity is reversed ■ Verify voltage across terminals (should be 10–55V dc) ■ Check for bad diode in terminal block ■ Replace electronics terminal block
Electronics not in communication	Power supply	■ Check power supply voltage at electronics (10.5V minimum) ■ Check load resistance (250 ohms minimum) ■ Check if unit is addressed properly ■ Replace electronics board
Milliamp reading is low or high	Zero Trim	■ Check pressure variable reading for saturation ■ Check if output is in alarm condition ■ Perform 4–20 mA output trim ■ Replace electronics board
No response to changes in applied flow	Blocked upstream piping and/or blocked impulse piping	■ Check test equipment ■ Check impulse piping for blockage ■ Check for disabled span adjustment ■ Check electronics security switch ■ Verify calibration settings (4 and 20 mA points) ■ Contact factory for replacement

Symptom	Possible cause	Corrective action
Low reading/high reading	Blocked upstream piping and/or blocked impulse piping	■ Check impulse piping for blockage ■ Check test equipment ■ Perform full sensor trim (if software revision is 35 or higher) ■ Contact factory for replacement
Erratic reading for pressure variable	Blocked upstream piping and/or blocked impulse piping	■ Check impulse piping for blockage ■ Check damping ■ Check for EMF interference ■ Contact factory for replacement

Check flow direction

Check that the flow arrow on the neck of the 405 points in the direction of flow. If the DP transmitter is remote mounted from the 405, be sure that the impulse tubing is connected correctly from the 405 to the DP transmitter (high to high and low to low).

Check orientation

Improper orientation can result in inaccurate measurements.

Check zero

The transmitter may read off in the high or low direction if not zeroed properly at start-up/commissioning. Refer to the appropriate transmitter reference manual for additional information.

Check valves

The correct valve setting for flow measurement are; equalizer valve fully closed, high and low side valves fully open.

Check configuration/scaling

Is the 20mA DP URL of the 405 set properly? This may involve sizing the 405 in the Toolkit Software program to confirm.

Confirm the DCS or PLC and transmitter on 405 are scaled consistently.

Is the square root being taken in the DCS or transmitter attached to the 405? The square root should not be taken in both places.

Check Rosemount Pressure Transmitter configuration

If a Rosemount Pressure Transmitter is being used, its enhanced functionality should be taken into account during configuration and troubleshooting. The square root should not be taken in the DCS if a 3051S MultiVariable Transmitter is being used.

See the Rosemount Pressure Transmitter Reference manuals for additional information. Rosemount 3051S MultiVariable Reference Manual is document number 00809-0100-4803. Rosemount 3051 Pressure Transmitter Reference Manual is document number 00809-0100-4001. Rosemount 2051 Pressure Transmitter Reference Manual is document number 00809-0100-4101.

4.3 RTD maintenance

4.3.1 Replacing an RTD

Direct mount - Compact Annubar

If an RTD needs to be replaced on a direct mounted Compact Annubar Flowmeter, proceed as follows:

1. Close instrument valves to ensure the pressure is isolated from the transmitter.
2. Open the bleed valves on the transmitter to remove all pressure.
3. Remove cap and RTD wiring only from temperature housing and from the transmitter.
4. Remove transmitter.
5. Remove RTD plug.
6. Pull RTD wire out of the nipple and remove RTD. Remove RTD by inserting the wires through a $^{7}/_{16}$-in. deep socket. Then use pliers or vise grips to rotate the socket. The RTD is in a thermowell. No live line pressure will be present.
7. Install new RTD and thread finger tight plus $^{1}/_{8}$ of a turn. Thread wires through the nipple. Note it may be easier to remove the terminal block from the temperature housing to reinsert the RTD wires.
8. Using appropriate thread lubricant, reinstall the $^{1}/_{2}$-in. NPT plug.
9. Use the same PTFE gaskets to reinstall the transmitter to the Annubar Flowmeter sensor head.
10. Use a torque wrench to tighten the stainless steel hex nuts in a cross pattern to 300 in-lbs.
11. Reconnect RTD wires in the temperature housing and replace cover.
12. Open instrument valves.

Figure 4-1. Exploded View of Direct Mounted Annubar, Integral RTD Installation

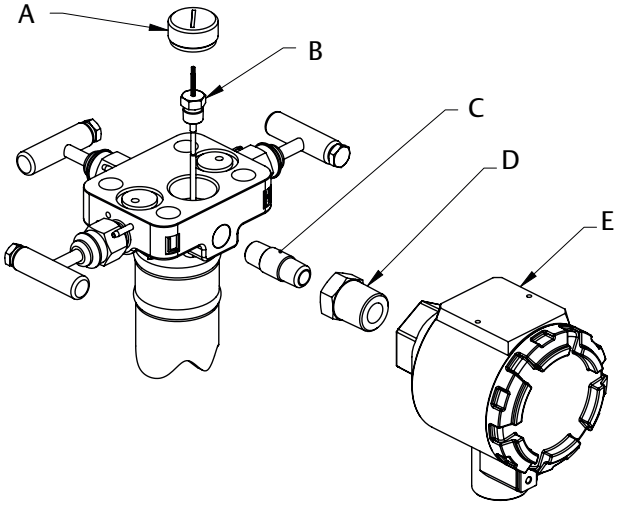

A. RTD Plug

B. 1/4" MNPT RTD

C. 1/4" MNPT Close Nipple

D. 1/4" FNPT x 1/2" MNPT Adapter

E. Temperature Housing

Remote mount- Compact Annubar

If an RTD needs to be replaced on a remote mounted Compact Annubar Flowmeter, proceed as follows:

1. Close instrument valves to ensure that the pressure is isolated from the transmitter.
2. Open bleed valves on transmitter to remove all pressure.
3. Remove cap from temperature housing.
4. Remove RTD wiring from terminal block.
5. Remove temperature housing from head.
6. Pull RTD wire out of nipple and remove RTD. The RTD is in a thermowell. No live line pressure will be present.
7. Install new RTD and thread wires through the nipple.
8. Using appropriate thread lubricant or tape, install terminal housing onto remote head.
9. Reconnect RTD wires to the terminal.
10. Open instrument valves.

Remote mount for compact conditioning and standard orifice

If an RTD needs to be replaced on a remote mount Rosemount 405 with primary element technology P and C, proceed as follows:

1. Close instrument valves to ensure the pressure is disconnected from the transmitter.
2. Open bleed valves on the transmitter to remove all pressure.
3. Remove cap.
4. Remove RTD wiring only from terminal.
5. Remove terminal housing from the head.
6. Pull RTD wire out of nipple and remove RTD. The RTD is in a thermowell, so no live line pressure will be present.
7. Install new RTD and thread wires through the nipple.
8. Using appropriate thread lubricant or tape, install terminal housing onto remote head.
9. Reconnect RTD wires to terminal. This diagram is for a typical RTD transmitter wiring connection.
10. Open instrument valves.

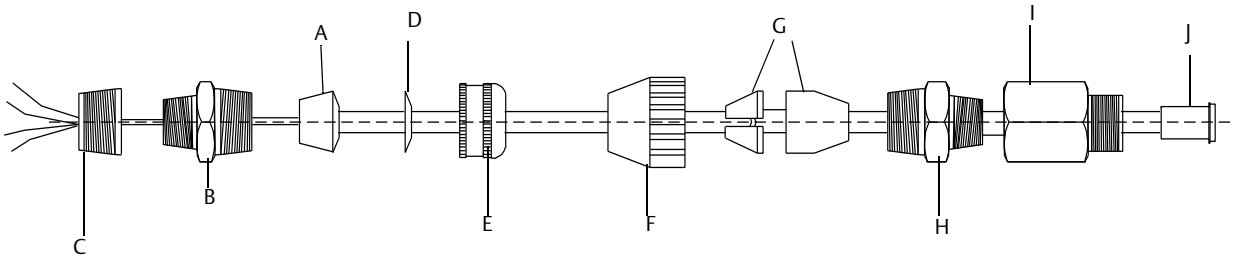

A. Rubber Bushing (Slide stop to edge of armored cable)

B. Compression Fitting

C. 3/4 to 1/2–in. NPT Adapter (Screws into RTD Connection Head)

D. Washer

E. Cap

F. Cap

G. Bushing

H. Compression

I. Fitting

J. Connect to transmitter

4.3.2 Direct mount for compact conditioning and standard orifice

If an RTD needs to be replaced on a direct mount Rosemount Integrated Orifice Flowmeter, proceed as follows:

Note
RTD wires are specifically bent for each unit, contact Rosemount for replacement RTD cable prior to disassembling the unit.

1. Close instrument valves to ensure that the pressure is disconnected from the transmitter.
2. Open the bleed valves on the transmitter to remove all pressure.
3. Remove the cap.
4. Remove the RTD wiring only from the terminal.
5. Unscrew the union adapter from the transmitter's conduit entry.
6. Unscrew the hex compression fitting from the 405 Orifice Plate and remove the RTD and metal wire from the unit. Remove the union adapter and hex compression fitting from RTD cable.
7. With the terminal block facing the user, thread the male half of the union adapter into the transmitter's left conduit entry, wrench tight.
8. Thread the hex compression fitting into the side of the 405 orifice plate, tighten to 250 lbs.
9. Insert the new RTD into the compression fitting until it bottoms out.
10. Tighten the plug on top of the compression fitting, wrench tight.
11. Attach the female end of the union adapter to the wire end of the RTD, wrench tight.
12. Run the wires into the conduit entry and connect both halves of the union fitting together with the coupling nut, wrench tight.
13. Reconnect the RTD wires to the terminal. This diagram is for a typical RTD transmitter wiring connection.
14. Open the instrument valves.

4.3.3 Electrical RTD check procedure

If the RTD is not functioning properly, perform the following checks to determine if the RTD is functioning properly. Figure 4-2 shows the schematic of a 4-wire RTD.

Continuity check

1. Using an Ohm meter or a multimeter, check the resistance between each of the red and white wires.
2. If the resistance measured represents the proper temperature, proceed to the Grounding check .
3. If the resistance measured does not represent the proper temperature or no resistance is measured (i.e. Open circuit), the RTD is damaged and must be replaced.

Grounding check

1. Using an Ohm meter or a Multimeter, test for each wire of the RTD to the sheath for a resistance value. If the RTD is installed in the Annubar sensor, test to the instrument connections of Annubar instead of the sheath of the RTD. All tests should measure an infinite resistance (i.e. Open circuit) between the RTD wires and the sheath.
2. If all tests verify an open circuit, the RTD is functioning properly.
3. If any tests confirm a shorted wire to the RTD sheath, the RTD is damaged and must be replaced.

Figure 4-2. Schematic of a Typical 4-Wire RTD

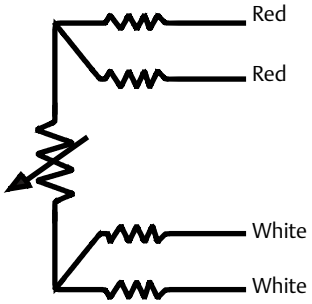

This section covers RTD maintenance procedures.

Appendix A Reference Data

Ordering information ..... page 33
Specifications ..... page 90
Dimensional drawings ..... page 97
Rosemount 405 Compact Orifice Primary Element ..... page 100
Spare parts ..... page 102

A.1 Ordering information

Table A-1. Rosemount 3051SFC Compact Flowmeter Ordering Information

★ The Standard offering represents the most common options. The starred options (★) should be selected for best delivery.
The Expanded offering is subject to additional delivery lead time.

Model	Product description	Measurement type		• = Available — = Unavailable
		D	1-7	
3051SFC	Compact Flowmeter	•	•	
Transmitter feature board measurement type				
1	Fully Compensated Mass & Energy Flow Calculations – Differential & Static Pressure w/ Temperature	—	•	★
2	Compensated Flow Calculations – Differential & Static Pressures	—	•	★
3	Compensated Flow Calculations – Differential Pressure & Temperature	—	•	★
4	Compensated Flow Calculations – Differential Pressure	—	•	★
D	Differential Pressure	•	—	★
5	Process Variables Only (No Flow Calculations) – Differential & Static Pressures with Temperature	—	•	
6	Process Variables Only (No Flow Calculations) – Differential & Static Pressures	—	•	
7	Process Variables Only (No Flow Calculations) – Differential Pressure & Temperature	—	•	
Primary element technology				
A	Annubar® Averaging Pitot Tube	•	•	★
C	Conditioning Orifice Plate	•	•	★
P	Orifice Plate	•	•	★
Material type				
S	316 SST	•	•	★
Line size				
005(1)	1/2-in. (15 mm)	•	•	★
010(1)	1-in. (25 mm)	•	•	★
015(1)	1 1/2-in. (40 mm)	•	•	★
020	2-in. (50 mm)	•	•	★
030	3-in. (80 mm)	•	•	★
040	4-in. (100 mm)	•	•	★

Table A-1. Rosemount 3051SFC Compact Flowmeter Ordering Information

★ The Standard offering represents the most common options. The starred options (★) should be selected for best delivery.
The Expanded offering is subject to additional delivery lead time.

Line size				
060	6-in. (150 mm)	•	•	★
080	8-in. (200 mm)	•	•	★
100[2][3]	10-in. (250 mm)	•	•	★
120[2][3]	12-in. (300 mm)	•	•	★
Primary element type				
N000	Annubar Sensor Size 1	•	•	★
N040	0.40 Beta Ratio (β)	•	•	★
N050	0.50 Beta Ratio (β)	•	•	★
N065[4]	0.65 Beta Ratio (β)	•	•	★
Temperature measurement		**D**	**1-7**	
T[6]	Integral RTD	—	•	★
0[5]	No Temperature Sensor	•	•	★
R[6]	Remote Thermowell and RTD	•	•	
Transmitter connection platform				
3	Direct-mount	•	•	★
7	Remote-mount, NPT Connections	•	•	★
Differential pressure range				
1	0 to 25 inH_2O (0 to 62.3 mbar)	•	•	★
2	0 to 250 inH_2O (0 to 623 mbar)	•	•	★
3	0 to 1000 inH_2O (0 to 2.5 bar)	•	•	★
Static pressure range				
A[7]	None	•	•	★
D	Absolute 0 to 800 psia (0 to 55.2 bar)	—	•	★
E[8]	Absolute 0 to 3626 psia (0 to 250 bar)	—	•	★
J	Gage -14.2 to 800 psig (-0.979 to 55.2 bar)	—	•	★
K[8]	Gage -14.2 to 3626 psig (-0.979 to 250 bar)	—	•	★
Transmitter output				
A	4–20 mA with digital signal based on HART® protocol	•	•	★
F[9]	FOUNDATION™ fieldbus protocol	•	—	★
X[10][11]	Wireless	•	—	★

Table A-1. Rosemount 3051SFC Compact Flowmeter Ordering Information

★ The Standard offering represents the most common options. The starred options (★) should be selected for best delivery.
The Expanded offering is subject to additional delivery lead time.

Transmitter housing style		**Material**	**Conduit entry size**			
00	None (customer-supplied electrical connection)			•	—	★
1A	PlantWeb® Housing	Aluminum	1/2-14 NPT	•	•	★
1B	PlantWeb Housing	Aluminum	M20 x 1.5	•	•	★
1J	PlantWeb Housing	SST	1/2-14 NPT	•	•	★
1K	PlantWeb Housing	SST	M20 x 1.5	•	•	★
2A	Junction Box Housing	Aluminum	1/2-14 NPT	•	—	★
2B	Junction Box Housing	Aluminum	M20 x 1.5	•	—	★
2E	Junction Box housing with output for remote display and interface	Aluminum	1/2-14 NPT	•	—	★
2F	Junction Box housing with output for remote display and interface	Aluminum	M20 x 1.5	•	—	★
2J	Junction Box Housing	SST	1/2-14 NPT	•	—	★
2M	Junction Box housing with output for remote display and interface	SST	1/2-14 NPT	•	—	★
5A[12]	Wireless PlantWeb housing	Aluminum	1/2-14 NPT	•	—	★
5J[12]	Wireless PlantWeb housing	SST	1/2-14 NPT	•	—	★
7J[10][13]	Quick Connect (A size Mini, 4-pin male termination)			•	—	★
1C	PlantWeb Housing	Aluminum	G1/2	•	•	
1L	PlantWeb Housing	SST	G1/2	•	•	
2C	Junction Box Housing	Aluminum	G1/2	•	—	
2G	Junction Box housing with output for remote display and interface	Aluminum	G1/2	•	—	
Transmitter performance class				**D**	**1-7**	
3051S MultiVariable™ SuperModule, Measurement Types 1, 2, 5, and 6				•	•	
3	Ultra for Flow: up to 0.75% flow rate accuracy, 14:1 flow turndown, 10-yr stability, limited 12-yr warranty			•	•	★
5	Classic MV: up to 1.10% flow rate accuracy, 8:1 flow turndown, 5-yr stability			—	•	★
3051S Single Variable SuperModule, Measurement Types 3, 4, 7, and D				•	•	
1	Ultra: up to 0.90% flow rate accuracy, 8:1 flow turndown, 10-yr stability, limited 12-yr warranty			•	—	★
2	Classic: up to 1.40% flow rate accuracy, 8:1 flow turndown, 5-yr stability			•	—	★
3[14]	Ultra for Flow: up to 0.75% flow rate accuracy, 14:1 flow turndown, 10-yr stability, limited 12-yr warranty			•	•	★

Wireless options (requires option code X and wireless PlantWeb housing)

Update rate, operating frequency, and protocol		**D**	**1-7**	
WA	User Configurable Update Rate	•	—	★
Operating frequency and protocol				
3	2.4 GHz DSSS, IEC 62591 (*Wireless*HART®)	•	—	★

Table A-1. Rosemount 3051SFC Compact Flowmeter Ordering Information

★ The Standard offering represents the most common options. The starred options (★) should be selected for best delivery.
The Expanded offering is subject to additional delivery lead time.

Omni-directional wireless antenna				
WK	External Antenna	•	—	★
WM	Extended Range, External Antenna	•	—	★
WN	High-Gain, Remote Antenna	•	—	
SmartPower™				
1[15]	Adapter for Black Power Module (I.S. Power Module Sold Separately)	•	—	★

Other options (include with selected model number)

Extended product warranty		**D**	**1-7**	
WR3	3-year limited warranty	•	•	★
WR5	5-year limited warranty	•	•	★
Installation accessories				
A	ANSI Alignment Ring (150#) (only required for 10-in. (250 mm) and 12-in. (300mm) line sizes)	•	•	★
C	ANSI Alignment Ring (300#) (only required for 10-in. (250 mm) and 12-in. (300mm) line sizes)	•	•	★
D	ANSI Alignment Ring (600#) (only required for 10-in. (250 mm) and 12-in. (300mm) line sizes)	•	•	★
G	DIN Alignment Ring (PN 16)	•	•	★
H	DIN Alignment Ring (PN 40)	•	•	★
J	DIN Alignment Ring (PN 100)	•	•	★
B	JIS Alignment Ring (10K)	•	•	
R	JIS Alignment Ring (20K)	•	•	
S	JIS Alignment Ring (40K)	•	•	
Remote adapters		**D**	**1-7**	
E	Flange adapters 316 SST ($^1/_2$-in. NPT)	•	•	★
High temperature applications				
T	Graphite Valve Packing (Tmax = 850 °F)	•	•	
Flow calibration				
WC[16]	Flow Calibration, 3 Pt, Conditioning Option C (all Pipe Schedules)	•	•	
WD[17][18]	Flow Calibration, 10 Pt, Conditioning Option C (all Schedules), Annubar Option A (Schedule 40)	•	•	
Pressure testing				
P1	Hydrostatic Testing with Certificate	•	•	
Special cleaning		**D**	**1-7**	
P2[19]	Cleaning for Special Processes	•	•	
PA	Cleaning per ASTM G93 Level D (section 11.4)	•	•	

Table A-1. Rosemount 3051SFC Compact Flowmeter Ordering Information

★ The Standard offering represents the most common options. The starred options (★) should be selected for best delivery.
The Expanded offering is subject to additional delivery lead time.

Special inspection				
QC1	Visual & Dimensional Inspection with Certificate	•	•	★
QC7	Inspection & Performance Certificate	•	•	★
Transmitter calibration certification				
Q4	Calibration Data Certificate for Transmitter	•	•	★
QP	Calibration Certificate and Tamper Evident Seal	•	•	★
Quality certification for safety				
QS[(20)(21)]	Prior-use certificate of FMEDA data	•	—	★
QT[(20)(21)(25)]	Safety Certified to IEC 61508 with certificate of FMEDA data	•	—	★
Material traceability certifications				
Q8	Material Traceability Certification per EN 10204:2004 3.1	•	•	★
Code conformance				
J2	ANSI / ASME B31.1	•	•	
J3	ANSI / ASME B31.3	•	•	
J4	ANSI / ASME B31.8	•	•	
Material conformance				
J5[(22)]	NACE MR-0175/ISO 15156	•	•	
Country certification				
J1	Canadian Registration	•	•	
Product certifications		**D**	**1-7**	
E1	ATEX Flameproof	•	•	★
I1	ATEX Intrinsic Safety	•	•	★
IA	ATEX FISCO Intrinsic Safety; for FOUNDATION™ fieldbus protocol only	•	—	★
N1	ATEX Type n	•	•	★
ND	ATEX Dust	•	•	★
K1	ATEX Flameproof, Intrinsic Safety, Type n, Dust (combination of E1, I1, N1, and ND)	•	•	★
E4	TIIS Flameproof	•	•	★
E5	FM Explosion-proof, Dust Ignition-proof	•	•	★
I5	FM Intrinsically Safe, Division 2	•	•	★
K5	FM Explosion-proof, Dust Ignition-proof, Intrinsically Safe, Division 2 (combination of E5 and I5)	•	•	★
E6[(23)]	CSA Explosion-proof, Dust Ignition-proof, Division 2	•	•	★
I6	CSA Intrinsically Safe	•	•	★
K6[(23)]	CSA Explosion-proof, Dust Ignition-proof, Intrinsically Safe, Division 2 (combination of E6 and I6)	•	•	★
E7	IECEx Flameproof, Dust Ignition-proof	•	•	★
I7	IECEx Intrinsic Safety	•	•	★

Table A-1. Rosemount 3051SFC Compact Flowmeter Ordering Information

★ The Standard offering represents the most common options. The starred options (★) should be selected for best delivery.
The Expanded offering is subject to additional delivery lead time.

Product certifications		**D**	**1-7**	
K7	IECEx Flameproof, Dust Ignition-proof, Intrinsic Safety, Type n (combination of E7, I7, and N7)	•	•	★
E3	China Flameproof	•	•	★
I3	China Intrinsic Safety	•	•	★
KA[23][24]	ATEX and CSA Flameproof, Intrinsically Safe, Division 2 (combination of E1, I1, E6, and I6)	•	•	★
KB[23][24]	FM and CSA Explosion-proof, Dust Ignition-proof, Intrinsically Safe, Division 2 (combination of E5, E6, I5, and I6)	•	•	★
KC[24]	FM and ATEX Explosion-proof, Intrinsically Safe, Division 2 (combination of E5, E1, I5, and I1)	•	•	★
KD[23][24]	FM, CSA, and ATEX Explosion-proof, Intrinsically Safe (combination of E5, E6, E1, I5, I6, and I1)	•	•	★
Shipboard approvals				
SBS	American Bureau of Shipping	•	•	★
Sensor fill fluid and O-ring options		**D**	**1-7**	
L1	Inert Sensor Fill Fluid	•	•	★
L2	Graphite-filled (PTFE) O-ring	•	•	★
LA	Inert sensor fill fluid and graphite-filled (PTFE) O-ring	•	•	★
Digital display[25]				
M5	PlantWeb® LCD display	•	•	★
M7[21][26][27]	Remote mount LCD display and interface, PlantWeb housing, no cable, SST bracket	•	•	★
M8[21][26]	Remote mount LCD display and interface, PlantWeb housing, 50 ft. (15m) cable, SST bracket	•	•	★
M9[21][26]	Remote mount LCD display and interface, PlantWeb housing, 100 ft. (31m) cable, SST bracket	•	•	★
Transient protection				
T1[28]	Transient terminal block	•	•	★
Manifold for remote mount option				
F2	3-Valve Manifold, SST	•	•	★
F6	5-Valve Manifold, SST	•	•	★
PlantWeb control functionality				
A01	FOUNDATION fieldbus Advanced Control Function Block Suite	•	—	★
PlantWeb diagnostic functionality				
D01	FOUNDATION fieldbus Diagnostics Suite	•	—	★
DA2[29]	Advanced HART Diagnostic Suite	•	—	★
PlantWeb enhanced measurement functionality				
H01[30]	FOUNDATION fieldbus Fully Compensated Mass Flow Block	•	—	★

Table A-1. Rosemount 3051SFC Compact Flowmeter Ordering Information

★ The Standard offering represents the most common options. The starred options (★) should be selected for best delivery.
The Expanded offering is subject to additional delivery lead time.

Cold temperature				
BRR	-60 °F (-51 °C) Cold Temperature Start-up	•	•	★
Alarm limit[20][21]				
C4	NAMUR Alarm & Saturation Levels, High Alarm	•	•	★
C5	NAMUR Alarm & Saturation Levels, Low Alarm	•	•	★
C6	Custom Alarm & Saturation Levels, High Alarm	•	•	★
C7	Custom Alarm & Saturation Levels, Low Alarm	•	•	★
C8	Low Alarm (Standard Rosemount Alarm & Saturation Levels)	•	•	★
Hardware adjustments and ground screw				
D1[20][21][31]	Hardware Adjustments (zero, span, alarm, security).	•	—	★
D4	External ground screw assembly	•	•	★
DA[20][21][31]	Hardware adjustments (zero, span, alarm, security) and external ground screw assembly	•	—	★
Conduit plug				
DO	316 SST Conduit Plug	•	•	★
Conduit electrical connector				
ZE[32]	M12, 4-pin, Male Connector (eurofast®)	•	•	★
ZM	A size Mini, 4-pin, Male Connector (minifast®)	•	•	★
Typical model number: 3051SFC 1 C S 060 N 065 T 3 2 J A 1A 3				

(1) Available with primary element technology P only.
(2) For the 10-in. (250 mm) and 12-in. (300 mm) line size, the alignment ring must be ordered (Installation Accessories).
(3) 10-in. (250 mm) and 12-in. (300 mm) line sizes not available with Primary Element Technology A.
(4) For 2-in. (50 mm) line sizes the Primary Element Type is 0.6 for Primary Element Technology Code C.
(5) Required for Measurement Type codes 2, 4, 6, and D.
(6) Only available with Transmitter Feature Board Measurement Type: 1, 3, 5, 7.
(7) Required for Measurement Type codes 3, 4, 7, and D.
(8) For Measurement Type 1, 2, 5, and 6 with DP range 1, absolute limits are 0.5 to 2000 psi (0,03 to 137,9 bar) and gage limits are -14.2 to 2000 psig (-0,98 to 137,9 bar).
(9) Requires PlantWeb housing.
(10) Available approvals are FM Intrinsically Safe, Division 2 (option code I5), CSA Intrinsically Safe (option code I6), ATEX Intrinsic Safety (option code I1), and IECEx Intrinsic Safety (option code I7).
(11) Requires wireless options and wireless PlantWeb housing.
(12) Only available with output code X.
(13) Available with output code A only.
(14) Only available with differential pressure ranges 2 and 3, and silicone fill fluid.
(15) Long-life Power Module must be shipped separately, order Part No. 00753-9220-0001.
(16) Available with primary element technology C only.
(17) Available with primary element technology C or A only.
(18) For Annubar Option A, consult factory for pipe schedules other than Sch. 40.
(19) Available with primary element technology C or P only.
(20) Not available with Output Protocol code F.
(21) Not available with output code X.
(22) Materials of Construction comply with metallurgical requirements within NACE MR0175/ISO for sour oil field production environments. Environmental limits apply to certain materials. Consult latest standard for details. Selected materials also conform to NACE MR0103 for sour refining environments.
(23) Not available with M20 or G ½ conduit entry size.
(24) Not available with Temperature Measurement option T: Integral RTD
(25) Not available with housing code 7J.
(26) Not available with output code F, option code DA2, or option code QT.
(27) See the 3051S Reference Manual (document number 00809-0100-4801) for cable requirements. Contact an Emerson Process Management representative for additional information.
(28) Not available with Housing code 00, 5A, 5J, or 7J. External ground screw assembly (option code D4) is included with the T1 option. The T1 option is not needed with FISCO Product Certifications, transient protection is included with the FISCO Product Certification code IA.
(29) Includes Hardware Adjustments (option code D1) as standard. Not available with output code X.
(30) Requires Rosemount Engineering Assistant version 5.5.1 to configure. Also requires Measurement Type D and output code F.
(31) Not available with housing style codes 2E, 2F, 2G, 2M, 5A, 5J, or 7J.
(32) Not available with Housing code 5A, 5J, or 7J. Available with Intrinsically Safe approvals only. For FM Intrinsically Safe, Division 2 (option code I5) or FM FISCO Intrinsically Safe (option code IE), install in accordance with Rosemount drawing 03151-1009 to maintain outdoor rating (NEMA 4X and IP66).

Table A-2. Rosemount 3051CFC Compact Flowmeter Ordering Information

★ The Standard offering represents the most common options. The starred options (★) should be selected for best delivery. The Expanded offering is subject to additional delivery lead time.

Model	Product description	
3051CFC[(1)]	Compact Flowmeter	
Measurement type		
D	Differential Pressure	★
Primary element technology		
A	Annubar Averaging Pitot Tube	★
C	Conditioning Orifice Plate	★
P	Orifice Plate	★
Material type		
S	316 SST	★
Line size		
005[(2)]	1/2-in. (15 mm)	★
010[(2)]	1-in. (25 mm)	★
015[(2)]	1 1/2-in. (40 mm)	★
020	2-in. (50 mm)	★
030	3-in. (80 mm)	★
040	4-in. (100 mm)	★
060	6-in. (150 mm)	★
080	8-in. (200 mm)	★
100[(3)(4)]	10-in. (250 mm)	★
120[(3)(4)]	12-in. (300 mm)	★
Primary element type		
N000	Annubar Sensor Size 1	★
N040	0.40 Beta Ratio	★
N050	0.50 Beta Ratio	
N065[(5)]	0.65 Beta Ratio	★
Temperature measurement		
0	No Temperature Sensor	★
R	Remote Thermowell and RTD	
T[(6)]	Integral Temperature	
Transmitter connection platform		
3	Direct-mount	★
7	Remote-mount, NPT Connections	★

Table A-2. Rosemount 3051CFC Compact Flowmeter Ordering Information

★ The Standard offering represents the most common options. The starred options (★) should be selected for best delivery. The Expanded offering is subject to additional delivery lead time.

Differential pressure range		
1	0 to 25 in H_2O (0 to 62,16 mbar)	★
2	0 to 250 in H_2O (0 to 621,60 mbar)	★
3	0 to 1000 in H_2O (0 to 2,48 bar)	★
Transmitter output		
A[7]	4–20 mA with digital signal based on HART Protocol	★
F	FOUNDATION fieldbus Protocol	★
W[8]	PROFIBUS PA Protocol	★
X[9]	Wireless (requires wireless options and engineered polymer housing)	★
M[10]	Low-Power 1-5 Vdc with Digital Signal Based on HART Protocol	
Transmitter housing material	**Conduit entry size**	
A	Aluminum	$^1/_2$-14 NPT ★
B	Aluminum	M20 x 1.5 ★
J	SST	$^1/_2$-14 NPT ★
K	SST	M20 x 1.5 ★
P[11]	Engineered polymer	No conduit entries ★
D[12]	Aluminum	G$^1/_2$
M[12]	SST	G$^1/_2$
Transmitter performance class		
1	Up to ±1.65% flow rate accuracy, 8:1 flow turndown, 5-year stability	★

Wireless options (requires Wireless Output Code X and Engineered Polymer Housing Code P)

Wireless transmit rate, operating frequency, and protocol		
WA3	User Configurable Transmit Rate, 2.4GHz *Wireless*HART	★
Antenna and SmartPower		
WP5	Internal Antenna, Compatible with Green Power Module (I.S. Power Module Sold Separately)	★

HART Revision Configuration (requires HART Protocol Output Code A)

HR5[7]	Configured for HART Revision 5	★
HR7[7]	Configured for HART Revision 7	★

Options (include with selected model number)

Extended product warranty		
WR3	3-year limited warranty	★
WR5	5-year limited warranty	★

Table A-2. Rosemount 3051CFC Compact Flowmeter Ordering Information

★ The Standard offering represents the most common options. The starred options (★) should be selected for best delivery. The Expanded offering is subject to additional delivery lead time.

Installation accessories		
AB	ANSI Alignment Ring (150#) (only required for 10-in. [250 mm] and 12-in. [300mm] line sizes)	★
AC	ANSI Alignment Ring (300#) (only required for 10-in. [250 mm] and 12-in. [300mm] line sizes)	★
AD	ANSI Alignment Ring (600#) (only required for 10-in. [250 mm] and 12-in. [300mm] line sizes)	★
DG	DIN Alignment Ring (PN16)	★
DH	DIN Alignment Ring (PN40)	★
DJ	DIN Alignment Ring (PN100)	★
JB	JIS Alignment Ring (10K)	
JR	JIS Alignment Ring (20K)	
JS	JIS Alignment Ring (40K)	
Remote adapters		
FE	Flange Adapters 316 SST (1/2-in NPT)	★
High temperature application		
HT	Graphite Valve Packing (Tmax = 850 °F)	
Flow calibration		
WC[13]	Flow Calibration, 3 pt, Conditioning Orifice Option C (all pipe schedules)	
WD[13][14]	Flow Calibration, 10 pt, Conditioning Option C (all schedules), Annubar Option A (Schedule 40)	
Pressure testing		
P1	Hydrostatic Testing with Certificate	
Special cleaning		
P2[15]	Cleaning for Special Services	
PA	Cleaning per ASTM G93 Level D (Section 11.4)	
Special inspection		
QC1	Visual & Dimensional Inspection with Certificate	★
QC7	Inspection and Performance Certificate	★
Transmitter calibration certification		
Q4	Calibration Certificate for Transmitter	★
Quality certification for safety		
QS[16]	Prior-use certificate of FMEDA data	★
QT[16]	Safety certified to IEC 61508 with certificate of FMEDA	★
Material traceability certification		
Q8	Material Traceability Certification per EN 10204:2004 3.1	★

Table A-2. Rosemount 3051CFC Compact Flowmeter Ordering Information

★ The Standard offering represents the most common options. The starred options (★) should be selected for best delivery. The Expanded offering is subject to additional delivery lead time.

Code conformance		
J2	ANSI/ASME B31.1	
J3	ANSI/ASME B31.3	
J4	ANSI/ASME B31.8	
Materials conformance		
J5[17]	NACE MR-0175/ISO 15156	
Country certification		
J1	Canadian Registration	
Product certifications		
E8	ATEX Flameproof, Dust	★
I1[18]	ATEX Intrinsic Safety and Dust	★
IA	ATEX FISCO Intrinsic Safety; for FOUNDATION fieldbus or PROFIBUS PA protocols only	★
N1	ATEX Type n and Dust	★
K8	ATEX Flameproof, Intrinsic Safety, Type n, Dust (combination of E8, I1 and N1)	★
E5	FM Explosion-proof, Dust Ignition-proof	★
I5[19]	FM Intrinsically Safe, Nonincendive	★
IE	FM FISCO Intrinsically Safe; for FOUNDATION fieldbus or PROFIBUS PA protocols only	★
K5	FM Explosion-proof, Dust Ignition-proof, Intrinsically Safe, and Division 2 (combination of E5 and I5)	★
C6	CSA Explosion-proof, Dust Ignition-proof, Intrinsically Safe, and Division 2	★
I6[11]	CSA Intrinsically Safe	★
K6	CSA and ATEX Explosion-proof, Intrinsically Safe, and Division 2 (combination of C6, E8, and I1)	★
E7	IECEx Flameproof, Dust Ignition-proof	★
I7	IECEx Intrinsic Safety	★
N7	IECEx Type n	★
K7	IECEx Flameproof, Dust Ignition-proof, Intrinsic Safety, and Type n (combination of I7, N7 and E7)	★
E2	INMETRO Flameproof	★
I2	INMETRO Intrinsic Safety	★
IB	INMETRO FISCO intrinsically safe; for FOUNDATION fieldbus or PROFIBUS PA protocols only	★
K2	INMETRO Flameproof, Intrinsic Safety	★
E3	China Flameproof	★
I3	China Intrinsic Safety	★
KB	FM and CSA Explosion-proof, Dust Ignition-proof, Intrinsically Safe, and Division 2 (combination of K5 and C6)	★
KD	CSA, FM, and ATEX Explosion-proof, Intrinsically Safe (combination of K5, C6, I1, and E8)	★

Table A-2. Rosemount 3051CFC Compact Flowmeter Ordering Information

★ The Standard offering represents the most common options. The starred options (★) should be selected for best delivery. The Expanded offering is subject to additional delivery lead time.

Sensor fill fluid and O-ring options		
L1[20]	Inert Sensor Fill Fluid	★
L2	Graphite-Filled (PTFE) O-ring	★
LA[20]	Inert Sensor Fill Fluid and Graphite-Filled (PTFE) O-ring	★
Shipboard approvals		
SBS[20]	American Bureau of Shipping	★
SLL[20][21]	Lloyds Register (LR)	
Display and interface options		
M4[22]	LCD Display with Local Operator Interface	★
M5	LCD Display	★
Transient protection		
T1[20][23]	Transient terminal block	★
Manifold for remote mount option		
F2	3-Valve Manifold, Stainless Steel	★
F6	5-Valve Manifold, Stainless Steel	★
PlantWeb control functionality		
A01[24]	FOUNDATION fieldbus Control Function Block Suite	★
PlantWeb diagnostic functionality		
DA0[15]	Power Advisory HART Diagnostic	★
D01[24]	FOUNDATION fieldbus Diagnostic Suite	★
Low power output		
C2	0.8-3.2 Vdc Output with Digital Signal Based on HART Protocol (available with Output code M only)	
Alarm levels		
C4[16]	NAMUR Alarm and Saturation Levels, High Alarm	★
CN[16]	NAMUR Alarm and Saturation Levels, Low Alarm	★
CR[16]	Custom alarm and saturation signal levels, high alarm	★
CS[16]	Custom alarm and saturation signal levels, low alarm	★
CT[16]	Rosemount Standard low alarm	★
Ground screw		
V5[20][25]	External Ground Screw Assembly	★
Configuration buttons		
D4[16]	Analog Zero and Span	★
DZ[26]	Digital Zero Trim	★
Typical model number: 3051CFC D C S 060 N 065 0 3 2 A A 1 WC E5 M5		

(1) Select Configuration Buttons (option code D4 or DZ) or Local Operator Interface (option code M4) if local configuration buttons are required.
(2) Available with Primary Element Technology P only.
(3) 10-in. (250 mm) and 12-in. (300 mm) line sizes not available with Primary Element Technology A.
(4) For the 10-in. (250 mm) and 12-in. (300 mm) line size, the alignment ring must be ordered (Installation Accessories).
(5) For 2-in. (50 mm) line sizes the Primary Element Type is 0.6 for Primary Element Technology Code C.
(6) Available with Primary Element Technology A only.
(7) Option HR5 configures the HART output to HART Revision 5. Option HR7 configures the HART output to HART Revision 7. The device can be field configured to HART Revision 5 or 7 if desired. HART Revision 5 is the default HART output.
(8) For local addressing and configuration, M4 (Local Operator Interface) is required.
(9) Requires wireless options and engineered polymer housing. Available approvals are FM Intrinsically Safe, (option code I5), CSA Intrinsically Safe (option code I6), ATEX Intrinsic Safety (option code I1), and IECEx Intrinsic Safety (option code I7).
(10) Only available with C6, E2, E5, I5, K5, KB and E8 approval. Not available with GE, GM, SBS, DA0, M4, D4, DZ, QT, HR5, HR7, CR, CS, CT.
(11) Only available with Wireless Output (output code X).
(12) Not available with Product certifications options E8, K8, E5, K5, C6, K6, E7, K7, E2, K2, E3, KB, KD.
(13) Available with Primary Element Technology C only.
(14) For Annubar option A, consult factory for pipe schedules other than schedule 40.
(15) Available with Primary Element Technology C or P only.
(16) Only available with HART 4-20 mA Output (output code A).
(17) Materials of Construction comply with metallurgical requirements within NACE MR0175/ISO for sour oil field production environments. Environmental limits apply to certain materials. Consult latest standard for details. Selected materials also conform to NACE MR0103 for sour refining environments.
(18) Dust approval not applicable to output code X. See "IEC 62591 (WirelessHART Protocol)" on page 97 for wireless approvals
(19) Nonincendive certification not provided with Wireless output option code (X).
(20) Not available with Wireless output (output code X).
(21) Only available with product certifications E7, E8, I1, I7, IA, K7, K8, KD, N1, N7
(22) Not available with output code F - FOUNDATION fieldbus or Wireless output (output code X) or Low Power (output code M).
(23) The T1 option is not needed with FISCO Product Certifications, transient protection is included with the FISCO Product Certification code IA, IB, and IE.
(24) Only valid with FOUNDATION fieldbus (output code F).
(25) The V5 option is not needed with the T1 option; external ground screw assembly is included with the T1 option.
(26) Only available with 4-20 mA HART Output (output code A) and Wireless output (output code X).

Table A-3. Rosemount 2051CFC Compact Flowmeter Ordering Information

★ The Standard offering represents the most common options. The starred options (★) should be selected for best delivery. The Expanded offering is subject to additional delivery lead time.

Model	Product description	
2051CFC	Compact Flowmeter	
Measurement type		
D	Differential Pressure	★
Primary element technology		
A	Annubar Averaging Pitot Tube	★
C	Conditioning Orifice Plate	★
P	Orifice Plate	★
Material type		
S	316 SST	★
Line size		
005[1]	1/2-in. (15 mm)	★
010[1]	1-in. (25 mm)	★
015[1]	1 1/2-in. (40 mm)	★
020	2-in. (50 mm)	★
030	3-in. (80 mm)	★
040	4-in. (100 mm)	★
060	6-in. (150 mm)	★
080	8-in. (200 mm)	★
100[2][3]	10-in. (250 mm)	★
120[2][3]	12-in. (300 mm)	★
Primary element type		
N000	Annubar Sensor Size 1	★
N040	0.40 Beta Ratio	★
N050	0.50 Beta Ratio	★
N065[4]	0.65 Beta Ratio	★
Temperature measurement		
0	No Temperature Sensor	★
T[5]	Integral RTD	
R	Remote Thermowell and RTD	
3	Direct-mount	★
Transmitter connection platform		
7	Remote-mount, NPT Connections	★

Table A-3. Rosemount 2051CFC Compact Flowmeter Ordering Information

★ The Standard offering represents the most common options. The starred options (★) should be selected for best delivery. The Expanded offering is subject to additional delivery lead time.

Differential pressure range		
1	0 to 25 in H_2O (0 to 62,3 mbar)	★
2	0 to 250 in H_2O (0 to 623 mbar)	★
3	0 to 1000 in H_2O (0 to 2,5 bar)	★
Transmitter output		
A[(6)]	4–20 mA with digital signal based on HART Protocol	★
F	FOUNDATION fieldbus Protocol	★
W	PROFIBUS PA Protocol	★
X	Wireless	★
M	Low-Power, 1-5 Vdc with Digital Signal Based on HART Protocol	
Transmitter housing material	**Conduit entry size**	
A	Aluminum	$^1/_2$-14 NPT	★
B	Aluminum	M20 x 1.5	★
J	SST	$^1/_2$-14 NPT	★
K[(7)]	SST	M20 x 1.5	★
P[(8)]	Engineered Polymer	No Conduit Entries	★
D	Aluminum	G$^1/_2$	
M[(7)]	SST	G$^1/_2$	
Transmitter performance class		
1	up to ±2.00% flow rate accuracy, 5:1 flow turndown, 2-year stability	★

Wireless options (requires Wireless output code X and Engineered Polymer housing code P)

Wireless transmit rate, operating frequency and protocol		
WA3	User Configurable Transmit Rate, 2.4GHz *Wireless*HART	★
Antenna and SmartPower		
WP5	Internal Antenna, Compatible with Green Power Module (I.S. Power Module Sold Separately)	★

Options (include with selected model number)

Extended product warranty		
WR3	3-year limited warranty	★
WR5	5-year limited warranty	★
Installation accessories		
AB	ANSI Alignment Ring (150#) (only required for 10-in. [250 mm] and 12-in. [300 mm] line sizes)	★
AC	ANSI Alignment Ring (300#) (only required for 10-in. [250 mm] and 12-in. [300 mm] line sizes)	★
AD	ANSI Alignment Ring (600#) (only required for 10-in. [250 mm] and 12-in. [300 mm] line sizes)	★

Table A-3. Rosemount 2051CFC Compact Flowmeter Ordering Information

★ The Standard offering represents the most common options. The starred options (★) should be selected for best delivery. The Expanded offering is subject to additional delivery lead time.

Installation accessories		
DG	DIN Alignment Ring (PN16)	★
DH	DIN Alignment Ring (PN40)	★
DJ	DIN Alignment Ring (PN100)	★
JB	JIS Alignment Ring (10K)	
JR	JIS Alignment Ring (20K)	
JS	JIS Alignment Ring (40K)	
Remote adapters		
FE	Flange Adapters 316 SST ($^1/_2$-in NPT)	★
High temperature application		
HT	Graphite Valve Packing (Tmax = 850 °F)	
Flow calibration		
WC[9]	Flow Calibration, 3 Pt, Conditioning Orifice Option C (all pipe schedules)	
WD[10][11]	Flow Calibration, 10 Pt, Conditioning Option C (all schedules), Annubar Option A (Schedule 40)	
Pressure testing		
P1	Hydrostatic Testing with Certificate	
Special cleaning		
P2[12]	Cleaning for Special Services	
PA	Cleaning per ASTM G93 Level D (Section 11.4)	
Special inspection		
QC1	Visual & Dimensional Inspection with Certificate	★
QC7	Inspection and Performance Certificate	★
Transmitter calibration certification		
Q4	Calibration Certificate for Transmitter	★
Quality certification for safety		
QS[13]	Prior-use certificate of FMEDA data	★
QT[14]	Safety Certified to IEC 61508 with certificate of FMEDA	★
Material traceability certification		
Q8	Material Traceability Certification per EN 10204:2004 3.1	★
Code conformance		
J2	ANSI/ASME B31.1	
J3	ANSI/ASME B31.3	
J4	ANSI/ASME B31.8	

Table A-3. Rosemount 2051CFC Compact Flowmeter Ordering Information

★ The Standard offering represents the most common options. The starred options (★) should be selected for best delivery. The Expanded offering is subject to additional delivery lead time.

Materials conformance		
J5[15]	NACE MR-0175 / ISO 15156	
Country certification		
J1	Canadian Registration	
Product certifications		
E1[7]	ATEX Flameproof	★
E2[7]	INMETRO Flameproof	★
E3[7]	China Flameproof	★
E5	FM Explosion-proof, Dust Ignition-proof	★
E6	CSA Explosion-proof, Dust Ignition-proof, Division 2	★
E7[7]	IECEx Flameproof	★
I1[7]	ATEX Intrinsic Safety	★
I2[7]	INMETRO Intrinsically Safe	★
I3[7]	China Intrinsic Safety	★
I5	FM Intrinsically Safe, Division 2	★
I6	CSA Intrinsically Safe	★
I7[7]	IECEx Intrinsic Safety	★
IA[7]	ATEX FISCO Intrinsic Safety; for FOUNDATION fieldbus protocol only	★
IE[7][16]	FM FISCO Intrinsically Safe	★
IF[7][13]	CSA FISCO Intrinsically Safe	★
IG[7][13]	IECEx FISCO Intrinsically Safe	★
K1[7]	ATEX Flameproof, Intrinsic Safety, Type n, Dust	★
K5	FM Explosion-proof, Dust Ignition-proof, Intrinsically Safe, Division 2 (combination of E5 and I5)	★
K6	CSA Explosion-proof, Dust Ignition-proof, Intrinsically Safe, Division 2 (combination of E6 and I6)	★
K7[7]	IECEx Flameproof, Dust Ignition-proof, Intrinsic Safety, Type n (combination of E7, I7, and N7)	★
KA[7]	ATEX and CSA Flameproof, Intrinsically Safe, Division 2	★
KB	FM and CSA Explosion-proof, Dust Ignition-proof, Intrinsically Safe, Division 2 (combination of E5, E6, I5, and I6)	★
KC[7]	FM and ATEX Explosion-proof, Intrinsically Safe, Division 2	★
KD[7]	FM, CSA, and ATEX Explosion-proof, Intrinsically Safe (combination of E5, I5, E6, I6, E1, and I1)	★
N1[7]	ATEX Type n	★
N7[7]	IECEx Type n	★
ND[7]	ATEX Dust	★

Table A-3. Rosemount 2051CFC Compact Flowmeter Ordering Information

★ The Standard offering represents the most common options. The starred options (★) should be selected for best delivery. The Expanded offering is subject to additional delivery lead time.

Sensor fill fluid and O-ring options		
L1[17]	Inert Sensor Fill Fluid	★
L2	Graphite-Filled (PTFE) O-ring	★
LA[17]	Inert Sensor Fill Fluid and Graphite-Filled (PTFE) O-ring	★
Display and interface options		
M4[18]	LCD Display with Local Operator Interface	★
M5	LCD Display	★
Transient protection		
T1[17][19]	Transient terminal block	★
Manifold for remote mount option		
F2	3-Valve Manifold, Stainless Steel	★
F6	5-Valve Manifold, Stainless Steel	★
Alarm limit		
C4[20][21]	NAMUR Alarm and Saturation Levels, High Alarm	★
CN[20][21]	NAMUR Alarm and Saturation Levels, Low Alarm	★
CR[20]	Custom Alarm and saturation signal levels, high alarm (requires C1 and Configuration Data Sheet)	★
CS[20]	Custom Alarm and saturation signal levels, low alarm (requires C1 and Configuration Data Sheet)	★
CT[20]	Low Alarm (standard Rosemount alarm and saturation levels)	★
PlantWeb control functionality		
A01[13]	FOUNDATION fieldbus Advanced Control Function Block Suite	★
Hardware adjustments		
D4[20]	Zero and Span Hardware Adjustments	★
DZ[22]	Digital Zero Trim	★
Ground screw		
V5[23]	External Ground Screw Assembly	★
HART revision configuration		
HR5[20][24]	Configured for HART Revision 5	★
HR7[20][25]	Configured for HART Revision 7	★
Typical model number: 2051CFC D C S 060 N 065 0 3 2 A A 1 WC E5 M5		

(1) Not available for Primary Element Technology C.
(2) For the 10-in. (250 mm) and 12-in. (300 mm) line size, the alignment ring must be ordered (Installation Accessories).
(3) 10-in. (250 mm) and 12-in. (300 mm) line sizes not available with Primary Element Technology A.
(4) For 2-in. (50 mm) line sizes the Primary Element Type is 0.6 for Primary Element Technology Code C.
(5) Available with Primary Element Technology A only.
(6) HART Revision 5 is the default HART output. The Rosemount 2051 with Selectable HART can be factory or field configured to HART Revision 7. To order HART Revision 7 factory configured, add option code HR7.
(7) Not available with Low Power Output Code M.
(8) Only available with output code X.
(9) Available with primary element technology C only.
(10) Available with primary element technology C or A only.
(11) For Annubar Option A, consult factory for pipe schedules other than Sch. 40.
(12) Available with primary element technology C or P only.
(13) Only valid with FOUNDATION fieldbus Output Code F.
(14) Only available with 4-20 mA HART output (output code A).
(15) Materials of Construction comply with metallurgical requirements within NACE MR0175/ISO for sour oil field production environments. Environmental limits apply to certain materials. Consult latest standard for details. Selected materials also conform to NACE MR0103 for sour refining environments.
(16) Not available with Primary Element Technology P.
(17) Not available with output code X.
(18) Not available with FOUNDATION fieldbus (Output Code F) or Wireless (Output Code X).
(19) Not available with Housing code 00, 5A, or 7J. The T1 option is not needed with FISCO Product Certifications, transient protection is included with the FISCO Product Certification code IA.
(20) Only available with 4-20 mA HART (output codes A and M).
(21) NAMUR-compliant operation is pre-set at the factory and cannot be changed to standard operation in the field.
(22) Only available with HART 4-20 mA (Output Codes A and M) and Wireless (Output Code X).
(23) The V5 option is not needed with the T1 option; external ground screw assembly is included with the T1 option.
(24) Configures the HART output to HART Revision 5. The device can be field configured to HART Revision 7 if needed.
(25) Configures the HART output to HART Revision 7. The device can be field configured to HART Revision 5 if 14 needed.

A.1.1 Rosemount 3051SF performance specifications

Performance assumptions include: measured pipe I.D, transmitter is trimmed for optimum flow accuracy, and performance is dependent on application parameters.

Table A-4. MultiVariable Flow Performance - Flow Reference Accuracy (Measurement Type 1)(1)(2)

3051SFC_A Compact Annubar Flowmeter - Annubar Option A			
		Classic MV (8:1 flow turndown)	Ultra for Flow (14:1 flow turndown)
Ranges 2-3	Uncalibrated	±1.60% of Flow Rate	±1.55% of Flow Rate
	Calibrated	±1.00% of Flow Rate	±0.80% of Flow Rate
3051SFC Compact Orifice Flowmeter - Conditioning Option C			
		Classic MV (8:1 flow turndown)	Ultra for Flow (14:1 flow turndown)
Ranges 2-3	β =0.4	±1.10% of Flow Rate	±0.75% of Flow Rate
	β =0.50, 0.65	±1.45% of Flow Rate	±1.15% of Flow Rate
3051SFC Compact Orifice Flowmeter - Orifice Option P(3)			
		Classic MV (8:1 flow turndown)	Ultra for Flow (14:1 flow turndown)
Ranges 2-3	β =0.4	±1.45% of Flow Rate	±1.30% of Flow Rate
	β =0.50, 0.65	±1.45% of Flow Rate	±1.30% of Flow Rate

(1) Measurement Types 2 - 4 assume that the unmeasured variables are constant. Additional uncertainty will depend on the variation in the unmeasured variables. DP Calibrated at up to 1/10th full scale to optimize accuracy over range of use.
(2) Range 1 flowmeters experience an additional uncertainty up to 0.9%. Consult your Emerson Process Management Representative for exact specifications.
(3) For line size less than 2 in. (50 mm) or greater than 8 in. (200 mm), add an additional 0.5% uncertainty.

Table A-5. Flow Performance - Flow Reference Accuracy (Measurement Type D)(1)(2)(3)

3051SFC_A Compact Annubar Flowmeter-Annubar Option A				
		Classic (8:1 flow turndown)	Ultra (8:1 flow turndown)	Ultra for Flow (14:1 flow turndown)
Ranges 2-3	Uncalibrated	±1.70% of Flow Rate	±1.65% of Flow Rate	±1.55% of Flow Rate
	Calibrated	±1.25% of Flow Rate	±0.95% of Flow Rate	±0.80% of Flow Rate
3051SFC Compact Orifice Flowmeter – Conditioning Option C				
		Classic (8:1 flow turndown)	Ultra (8:1 flow turndown)	Ultra for Flow (14:1 flow turndown)
Ranges 2-3	β =0.4	±1.10% of Flow Rate	±0.9% of Flow Rate	±0.75% of Flow Rate
	β =0.65	±1.40% of Flow Rate	±1.25% of Flow Rate	±1.15% of Flow Rate
3051SFC Compact Orifice Flowmeter - Orifice Option P(4)				
		Classic (8:1 flow turndown)	Ultra (8:1 flow turndown)	Ultra for Flow (14:1 flow turndown)
Ranges 2-3	β =0.4	±1.80% of Flow Rate	±1.35% of Flow Rate	±1.30% of Flow Rate
	β =0.65	±1.80% of Flow Rate	±1.35% of Flow Rate	±1.30% of Flow Rate

(1) For Measurement Types 5 - 7, refer to the Reference Accuracy specification for the 3051SMV with Measurement Type P.
(2) These flow measurement accuracies assume a constant density, viscosity, and expansibility factor.
(3) Range 1 flowmeters experience an additional uncertainty up to 0.9%. Consult your Emerson Process Management Representative for exact specifications.
(4) For line size less than 2 in. (50 mm) or greater than 8 in. (200 mm), add an additional 0.5% uncertainty.

Rosemount 3051SF dynamic performance

Total time response at 75 °F (24 °C), includes dead time(1)

3051SF_D	3051SF_1, 2, 5, or 6	3051SF_3, 4, or 7
DP Ranges 2-5: 100 ms Range 1: 255 ms Range 0: 700 ms	DP Range 1: 310 ms DP Range 2: 170 ms DP Range 3: 155 ms AP & GP: 240 ms	DP Ranges 2-5: 145 ms DP Range 1: 300 ms DP Range 0: 745 ms

(1) For FOUNDATION fieldbus (output code F), add 52 ms to stated values (not including segment macro-cycle).
For option code DA2, add 45 ms (nominal) to stated values.

Dead time(1)

3051SF_D	3051SF_1-7
45 ms (nominal)	DP: 100 ms AP & GP: 140 ms RTD Interface: 1 s

(1) For option code DA2, dead time is 90 milliseconds (nominal).

Update rate(1)

3051SF_D	3051SF_1-7	
22 updates per sec.	DP: 22 updates per sec. AP & GP: 11 updates per sec. RTD Interface: 1 update per sec.	Calculated Variables: Mass / Volumetric Flow Rate: 22 updates per sec. Energy Flow Rate: 22 updates per sec. Totalized Flow: 1 update per sec.

(1) Does not apply to Wireless (output code X). See"Wireless Self-Organizing Networks" on page -63 for wireless update rate.

Mounting position effects

Models		Ultra, Ultra for Flow, Classic and Classic MV
3051SF_3, 4, 7, or D		Zero shifts up to ±1.25 inH_2O (3,11 mbar), which can be zeroed Span: no effect
3051SF_1, 2, 5, or 6	DP Sensor:	Zero shifts up to ±1.25 inH_2O (3,11 mbar), which can be zeroed Span: no effect
	GP/AP Sensor:	Zero shifts to ±2.5 inH_2O (6,22 mbar), which can be zeroed Span: no effect

Vibration effect for Rosemount3051SFC

Less than ±0.1% of URL when tested per the requirements of IEC60770-1 field with general application or pipeline with low vibration level (10-1000 Hz test frequency range, 0.15mm displacement peak amplitude, 20 m/s^2 acceleration amplitude)(1)

Power supply effect

Less than ±0.005% of calibrated span per volt change in voltage at the transmitter terminals

(1) Stainless steel temperature housing is not recommended with primary element technology A in applications with mechanical vibration.

Electromagnetic compatibility (EMC)

Meets all relevant requirements of EN 61326 and NAMUR NE-21.[(1)(2)]

(1) NAMUR NE-21 does not apply to wireless output code X.
(2) 3051SMV and 3051SF_1, 2, 3, 4, 5, 6, 7 requires shielded cable for both temperature and loop wiring.

Transient protection (option T1)

Meets IEEE C62.41.2-2002, Location Category B

6 kV crest (0.5 μs - 100 kHz)

3 kA crest (8 × 20 microseconds)

6 kV crest (1.2 × 50 microseconds)

Meets IEEE C37.90.1-2002 Surge Withstand Capability

SWC 2.5 kV crest, 1.0 MHz wave form

A.1.2 Rosemount 3051CF performance specifications

Performance specifications covers both HART, FOUNDATION fieldbus and PROFIBUS PA protocols unless specified. For zero-based spans, reference conditions, silicone oil fill, glass-filled PTFE o-rings, SST materials, coplanar flange (3051C) or 1/2 in.- 14 NPT (3051T) process connections, digital trim values set to equal range points.

Conformance to specification (±3σ [Sigma])

Technology leadership, advanced manufacturing techniques and statistical process control ensure specification conformance to at least ±3σ.

Table A-6. Flow performance - flow reference accuracy (1)

3051CFC_A Compact Annubar Flowmeter - Annubar Option A		
Ranges 2-3	Standard	±2.10% of Flow Rate at 8:1 flow turndown
	Calibrated	±1.80% of Flow Rate at 8:1 flow turndown
3051CFC Compact Orifice Flowmeter – Conditioning Option C		
Ranges 2-3	β = 0.40	±1.75% of Flow Rate at 8:1 flow turndown
	β = 0.50, 0.65	±1.95% of Flow Rate at 8:1 flow turndown
3051CFC Compact Orifice Flowmeter - Orifice Option P		
Ranges 2-3	β = 0.4	±2.00% of Flow Rate at 8:1 flow turndown
	β = 0.50, 0.65	±2.00% of Flow Rate at 8:1 flow turndown

(1) Range 1 flowmeters may experience an additional uncertainty up to 0.9%. Consult your Emerson Process Management Representative for exact specifications.

Total performance

Total performance is based on combined errors of reference accuracy, ambient temperature effect, and static pressure effect.

For ±50 °F (28 °C) temperature changes, up to 1000 psi (6,9 MPa) line pressure (CD only), from 1:1 to 5:1 rangedown.

Models	Total performance
3051CF Ranges 2-5	±0.15% of span

Long term stability

Models	Long term stability
3051CF Ranges 2-5	±0.2% of URL for 10 years ±50 °F (28 °C) temperature changes, and up to 1000 psi (6,9 MPa) line pressure
3051CF Low/Draft Range Ranges 0-1	±0.2% of URL for 1 year

Dynamic performance

	4 - 20 mA HART[1] 1 - 5 Vdc HART Low Power	FOUNDATION fieldbus and PROFIBUS PA Protocols [3]	Typical HART Transmitter Response Time
Total response time ($T_d + T_c$)[2]:			
3051CF, Ranges 2-5: Range 1: Range 0:	100 ms 255 ms 700 ms	152 ms 307 ms N/A	
Dead Time (Td)	45 ms (nominal)	97 ms	
Update Rate	22 times per second	22 times per second	

(1) Dead time and update rate apply to all models and ranges; analog output only.
(2) Nominal total response time at 75 °F (24 °C) reference conditions.
(3) Transducer block response time, Analog Input block execution time not included.

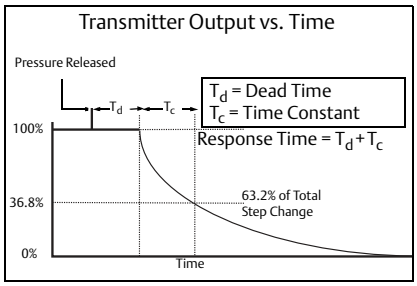

Vibration effect for 3051CFC

Less than ±0.1% of URL when tested per the requirements of IEC60770-1 field with general application or pipeline with low vibration level (10-1000 Hz test frequency range, 0.15mm displacement peak amplitude, 20 m/s2 acceleration amplitude).[1]

Power supply effect

Less than ±0.005% of calibrated span per volt.

Electromagnetic Compatibility (EMC)

Meets all relevant requirements of EN 61326 and Namur NE-21.

Transient protection (Option Code T1)

Meets IEEE C62.41, Category Location B

6 kV crest (0.5 µs - 100 kHz)
3 kV crest (8 × 20 microseconds)
6 kV crest (1.2 × 50 microseconds)

Note
Calibrations at 68 °F (20 °C) per ASME Z210.1 (ANSI)

(1) Stainless steel temperature housing is not recommended with primary element technology A in applications with mechanical vibration.

A.1.3 Rosemount 2051CF performance specifications

Performance assumptions include: measured pipe I.D, transmitter is trimmed for optimum flow accuracy, and performance is dependent on application parameters.

Table A-7. Flow performance - Flow reference accuracy(1)

2051SFC_A Compact Annubar Flowmeter - Annubar Option A		
Ranges 2-3	Standard	±2.60% of Flow Rate at 5:1 flow turndown
	Calibrated	±2.30% of Flow Rate at 5:1 flow turndown
2051CFC Compact Orifice Flowmeter – Conditioning Option C		
Ranges 2-3	β =0.4	±2.25% of Flow Rate at 5:1 flow turndown
	β =0.50, 0.65	±2.45% of Flow Rate at 5:1 flow turndown
2051CFC Compact Orifice Flowmeter - Orifice Option P(2)		
Ranges 2-3	β =0.4	±2.50% of Flow Rate at 5:1 flow turndown
	β =0.50, 0.65	±2.50% of Flow Rate at 5:1 flow turndown

(1) Range 1 flowmeters may experience an additional uncertainty up to 0.9%. Consult your Emerson Process Management Representative for exact specifications.
(2) For smaller line sizes, see Rosemount Compact Orifice.

A.1.4 Rosemount 3051SF functional specifications

Range and sensor limits

Flowmeter with Coplanar sensor module

Range	DP Sensor (3051SF_3, 4, or 7)	
	Lower (LRL)	Upper (URL)
1	0 inH_2O (0 mbar)	25 inH_2O (62,3 mbar)
2	0 inH_2O (0 bar)	250 inH_2O (0,62 bar)
3	0 inH_2O (0 bar)	1000 inH_2O (2,49 bar)

Flowmeter with MultiVariable sensor module

Range	DP Sensor (3051SF 1, 2, 5, or 6)	
	Lower (LRL)	Upper (URL)
1	0 inH_2O (0 mbar)	25.0 inH_2O (62,3 mbar)
2	0 inH_2O (0 bar)	250.0 inH_2O (0,62 bar)
3	0 inH_2O (0 bar)	1000.0 inH_2O (2,49 bar)

Range	Static Pressure Sensor (GP/AP)	
	Lower (LRL)	Upper (URL)(1)
3	GP(2): -14.2 psig (0,98 bar) AP: 0.5 psia (34,5 mbar)	GP: 800 psig (55,16 bar) AP: 800 psia (55,16 bar)
4	GP(2): -14.2 psig (0,98 bar) AP: 0.5 psia (34,5 mbar)	GP: 3626 psig (250 bar) AP: 3626 psia (250 bar)

(1) For SP Range 4 with DP Range 1, the URL is 2000 psi (137,9 bar).
(2) Inert Fill: Minimum pressure = 1.5 psia (0,10 bar) or -13.2 psig (-0,91 bar).

Process temperature RTD interface (3051SF_1, 3, 5 or 7)(1)

Lower (LRL)	Upper (URL)
-328 °F (-200 °C)	1562 °F (850 °C)

(1) Transmitter is compatible with any Pt 100 RTD sensor. Examples of compatible RTDs include Rosemount Series 68 and 78 RTD Temperature Sensors.

Minimum span limits

Transmitter with Coplanar sensor module (single variable)

Range	DP Sensor (3051SF_D, 3, 4 or 7)	
	Ultra & Ultra for Flow	Classic
1	0.5 inH_2O (1,24 mbar)	0.5 inH_2O (1,24 mbar)
2	1.3 inH_2O (3,11 mbar)	2.5 inH_2O (6,23 mbar)
3	5.0 inH_2O (12,4 mbar)	10.0 inH_2O (24,9 mbar)

Transmitter with MultiVariable sensor module

Range	DP Sensor (3051SF_1, 2, 5, or 6)	
	Ultra for Flow	Classic MV
1	0.5 inH_2O (1,24 mbar)	0.5 inH_2O (1,24 mbar)
2	1.3 inH_2O (3,11 mbar)	2.5 inH_2O (6,23 mbar)
3	5.0 inH_2O (12,4 mbar)	10.0 inH_2O (24,9 mbar)

Range	Static Pressure Sensor (GP/AP)	
	Ultra for Flow	Classic MV
3	4.0 psi (276 mbar)	8.0 psi (522 mbar)
4	18.13 psi (1,25 bar)	36.26 psi (2,50 bar)

Process temperature RTD Interface (3051SF_1, 3, 5 or 7)

Minimum Span = 50 °F (28 °C)

Service

3051SF_5, 6, 7, or D (direct process variable output):

Liquid, gas, and steam applications

3051SF_1, 2, 3, or 4 (mass and energy flow output):

Some fluid types are only supported by certain measurement types

Fluid Compatibility with Pressure and Temperature Compensation • Available — Not available

Ordering code	Measurement type	Fluid types			
		Liquids	Saturated steam	Superheated steam	Gas and natural gas
1	DP / P/ T (Full Compensation)	•	•	•	•
2	DP / P	•	•	•	•
3	DP / T	•	•	—	—
4	DP only	•	•	—	—

4–20 mA/HART

Zero and span adjustment

Zero and span values can be set anywhere within the range.
Span must be greater than or equal to the minimum span.

Output

Two-wire 4–20 mA is user-selectable for linear or square root output. Digital process variable superimposed on 4–20 mA signal, available to any host that conforms to the HART protocol.

Power supply

External power supply required.

- 3051SF_D: 10.5 to 42.4 Vdc with no load
- 3051SF_D with Advanced HART Diagnostics Suite: 12 to 42.4 Vdc with no load
- 3051SF_1-7: 12 to 42.4 Vdc with no load

Load limitations

Maximum loop resistance is determined by the voltage level of the external power supply, as described by:

3051SF_D

Maximum Loop Resistance = 43.5 * (Power Supply Voltage – 10.5)

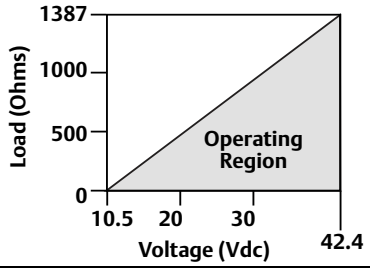

The Field Communicator requires a minimum loop resistance of 250Ω for communication.

3051SF_1-7 and 3051SF_D with HART Diagnostics (option code DA2)

Maximum Loop Resistance = 43.5 * (Power Supply Voltage – 12.0)

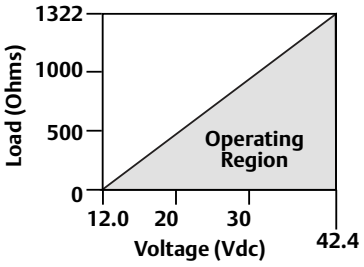

The Field Communicator requires a minimum loop resistance of 250Ω for communication.

Advanced HART Diagnostics Suite (Option Code DA2)

The Rosemount 3051SF provides Abnormal Situation Prevention indication for a breakthrough in diagnostic capability. The 3051SF ASP Diagnostics Suite for HART includes Statistical Process Monitoring (SPM), variable logging with time stamp and advanced process alerts. The enhanced EDDL graphic display provides an intuitive and user-friendly interface to better visualize these diagnostics.

The integral SPM technology calculates the mean and standard deviation of the process variable 22 times per second and makes them available to the user. The 3051SF uses these values and highly flexible configuration options for customization to detect many user-defined or application specific abnormal situations (e.g. detecting plugged impulse lines and fluid composition change). Variable logging with time stamp and advanced process alerts capture valuable process and sensor data to enable quick troubleshooting of application and installation issues.

FOUNDATION fieldbus

Power supply

External power supply required; transmitters operate on 9.0 to 32.0 Vdc transmitter terminal voltage.

Current draw

17.5 mA for all configurations (including LCD display option)

FOUNDATION fieldbus parameters

Schedule Entries	14 (max.)
Links	30 (max.)
Virtual Communications Relationships (VCR)	20 (max.)

Standard function blocks

Resource block

- Contains hardware, electronics, and diagnostic information.

Transducer block

- Contains actual sensor measurement data including the sensor diagnostics and the ability to trim the pressure sensor or recall factory defaults.

LCD block

- Configures the local display.

2 Analog input blocks

- Processes the measurements for input into other function blocks. The output value is in engineering or custom units and contains a status indicating measurement quality.

PID Block with auto-tune

- Contains all logic to perform PID control in the field including cascade and feedforward. Auto-tune capability allows for superior tuning for optimized control performance.

Backup Link Active Scheduler (LAS)

The transmitter can function as a Link Active Scheduler if the current link master device fails or is removed from the segment.

Software upgrade in the field

Software for the 3051SF with FOUNDATION Fieldbus is easy to upgrade in the field using the FOUNDATION fieldbus Common Device Software Download procedure.

PlantWeb alerts

Enable the full power of the PlantWeb digital architecture by diagnosing instrumentation issues, communicating advisory, maintenance, and failure details, and recommending a solution.

Advanced Control Function Block Suite (Option Code A01)

Input selector block

- Selects between inputs and generates an output using specific selection strategies such as minimum, maximum, midpoint, average, or first “good.”

Arithmetic block

- Provides pre-defined application-based equations including flow with partial density compensation, electronic remote seals, hydrostatic tank gauging, ratio control and others.

Signal characterizer block

- Characterizes or approximates any function that defines an input/output relationship by configuring up to twenty X, Y coordinates. The block interpolates an output value for a given input value using the curve defined by the configured coordinates.

Integrator block

- Compares the integrated or accumulated value from one or two variables to pre-trip and trip limits and generates discrete output signals when the limits are reached. This block is useful for calculating total flow, total mass, or volume over time.

Output splitter block

- Splits the output of one PID or other control block so that the PID will control two valves or other actuators.

Control selector block

- Selects one of up to three inputs (highest, middle, or lowest) that are normally connected to the outputs of PID or other control function blocks.

Block	Execution time
Resource	N/A
Transducer	N/A
LCD Block	N/A
Analog Input 1, 2	20 milliseconds
PID with Auto-tune	35 milliseconds
Input Selector	20 milliseconds
Arithmetic	20 milliseconds
Signal Characterizer	20 milliseconds
Integrator	20 milliseconds
Output Splitter	20 milliseconds
Control Selector	20 milliseconds

Fully compensated mass flow block (Option Code H01)

Calculates fully compensated mass flow based on differential pressure with external process pressure and temperature measurements over the fieldbus segment. Configuration for the mass flow calculation is easily accomplished using the Rosemount Engineering Assistant.

ASP Diagnostics Suite for FOUNDATION fieldbus (Option Code D01)

The Rosemount 3051SF ASP Diagnostics Suite for FOUNDATION fieldbus provides Abnormal Situation Prevention indication and enhanced EDDL graphic displays for easy visual analysis.

The integral Statistical Process Monitoring (SPM) technology calculates the mean and standard deviation of the process variable 22 times per second and makes them available to the user. The 3051SF uses these values and highly flexible configuration options for customization to detect many user-defined or application specific abnormal situations (e.g. detecting plugged impulse lines and fluid composition change).

Wireless self-organizing networks

Output

*Wireless*HART, 2.4 GHz DSSS

Local display

The optional 5-digit LCD display can display user-selectable information such as primary variable in engineering units, percent of range, sensor module temperature, and electronics temperature. Display updates at up to once per minute.

Update rate

*Wireless*HART, user selectable 8 seconds to 60 minutes

Power module

Field replaceable, keyed connection eliminates the risk of incorrect installation, Intrinsically Safe Lithium-thionyl chloride power module with polybutadine terephthalate (PBT) enclosure. Ten-year life at one-minute update rate.(1)

(1) Reference conditions are 70 °F (21 °C), and routing data for three additional network devices.
NOTE: Continuous exposure to ambient temperature limits of -40 °F or 185 °F (-40 °C or 85 °C) may reduce specified life by less than 20 percent.

Overpressure limits

Transmitters withstand the following limits without damage:

Coplanar sensor module (single variable)

Range	DP(1)
	3051SF_3, 4, 7, or D
1	2000 psi (137,9 bar)
2	3626 psi (250,0 bar)
3	3626 psi (250,0 bar)

(1) The overpressure limit of a DP Sensor with the P9 option is 4500 psig (310,3 bar). The overpressure limit of a DP Sensor with the P0 option is 6092 psig (420 bar).

Coplanar MultiVariable sensor module (3051SF_1, 2, 5, or 6)

Static pressure	Differential pressure		
	Range 1	Range 2	Range 3
Range 3 GP/AP	1600 psi (110,3 bar)	1600 psi (110,3 bar)	1600 psi (110,3 bar)
Range 4 GP/AP	2000 psi (137,9 bar)	3626 psi (250 bar)	3626 psi (250 bar)

Static pressure limits

Coplanar sensor module

Operates within specifications between static line pressures of:

Range	DP Sensor[1]
	3051SF_3, 4, 7, or D
1	0.5 psia to 2000 psig (0,03 to 137,9 bar)
2	0.5 psia to 3626 psig (0,03 to 150 bar)
3	0.5 psia to 3626 psig (0,03 to 150 bar)

(1) The static pressure limit of a DP Sensor with the P9 option is 4500 psig (310,3 bar). The static pressure limit of a DP Sensor with the P0 option is 6092 psig (420 bar).

Coplanar MultiVariable sensor module (3051SF_1, 2, 5, or 6)

Operates within specifications between static line pressures of 0.5 psia (0,03 bar) and the values in the table below:

Static pressure	Differential pressure		
	Range 1	Range 2	Range 3
Range 3 GP/AP	800 psi (57,91 bar)	800 psi (57,91 bar)	800 psi (57,91 bar)
Range 4 GP/AP	2000 psi (137,9 bar)	3626 psi (250 bar)	3626 psi (250 bar)

Burst pressure limits

Coplanar sensor module

10000 psig (689,5 bar)

Temperature limits

Ambient

-40 to 185 °F (-40 to 85 °C)
With LCD display[1]: -40 to 175 °F (-40 to 80 °C)
With option code P0: -20 to 185 °F (-29 to 85 °C)

(1) LCD display may not be readable and LCD updates will be slower at temperatures below -4 °F (-20 °C).

Storage

-50 to 185 °F (-46 to 85 °C)
With LCD display: -40 to 185 °F (-40 to 85 °C)
With wireless output: -40 to 185 °F (-40 to 85 °C)

Process temperature limits

For 3051SFC Temperature Limits, see "Process temperature limits" on page 91.

Humidity limits

0–100% relative humidity

Turn-on time(1)

When power is applied to the transmitter during startup, performance will be within specifications per the time period described below:

Transmitter	Turn-on time (typical)
3051S, 3051SF_D	2 seconds
Diagnostics	5 seconds
3051SMV, 3051SF_1-7	5 seconds

(1) Does not apply to wireless option code X.

Volumetric displacement

Less than 0.005 in^3 (0,08 cm^3)

Damping(1)

Analog output response time to a step change is user-selectable from 0 to 60 seconds for one time constant. For 3051SF_1-7, each variable can be individually adjusted. Software damping is in addition to sensor module response time.

(1) Does not apply to wireless option code X.

Failure mode alarm

HART 4-20 mA (output option code A)

If self-diagnostics detect a gross transmitter failure, the analog signal will be driven offscale to alert the user. Rosemount standard (default), NAMUR, and custom alarm levels are available (see Alarm configuration below).

High or low alarm signal is software-selectable or hardware-selectable via the optional switch (option D1).

Alarm configuration

	High alarm	Low alarm
Default	≥ 21.75 mA	≤ 3.75 mA
NAMUR compliant(1)	≥ 22.5 mA	≤ 3.6 mA
Custom levels(2)	20.2 - 23.0 mA	3.4 - 3.8 mA

(1) Analog output levels are compliant with NAMUR recommendation NE 43, see option codes C4 or C5.
(2) Low alarm must be 0.1 mA less than low saturation and high alarm must be 0.1 mA greater than high saturation.

A.1.5 Rosemount 3051CF functional specifications

Range and sensor limits

Table A-8. 3051CF Range and Sensor Limits

Range	Minimum span	Upper (URL)	Lower (LRL)
1	0.50 inH_2O (1,24 mbar)	25.00 inH_2O (62,16 mbar)	-25.00 inH_2O (-62,16 mbar)
2	1.67 inH_2O (4,15 mbar)	250.00 inH_2O (621,60 mbar)	-250.00 inH_2O (-621,60 bar)
3	6.67 inH_2O (16,58 mbar)	1000.00 inH_2O (2,48 bar)	-1000.00 inH_2O (-2,48 bar)

4-20 mA HART (output code A)

Power supply

External power supply required. Standard transmitter (4-20mA) operates on 10.5-42.4 Vdc with no load

Load limitations

Maximum loop resistance is determined by the voltage level of the external power supply described by:

Max. Loop Resistance = 43.5 (Power Supply Voltage – 10.5)

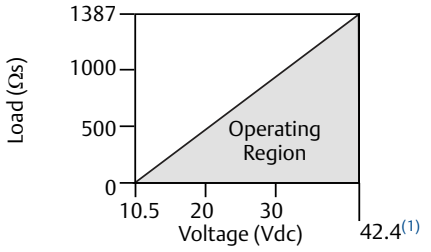

Communication requires a minimum loop resistance of 250 ohms.

(1) For CSA approval, power supply must not exceed 42.4 V.

Indication

Optional two line LCD/LOI Display

Optional configuration buttons

Configuration buttons need to be specified:

Digital Zero trim (option code DZ) changes digital value of the transmitter and is used for performing a sensor zero trim.

Analog Zero Span (option code D4) changes analog value and can be used to re-range the transmitter with an applied pressure.

Output

Two-wire 4-20mA, user selectable for linear or square root output. Digital process variable superimposed on 4-20 mA signal, available to any host that conforms to HART protocol. The 3051 comes with Selectable HART Revisions. Digital communications based on HART Revision 5 (default) or Revision 7 (option code HR7) protocol can be selected. The HART revision can be switched in the field using any HART based configuration tool or the optional local operator interface (M4).

Power advisory diagnostics

Power Advisory Diagnostics pro-actively detect and notify you of degraded electrical loop integrity before it can affect your process operation. Example loop problems that can be detected include water in the terminal compartment, corrosion of terminals, improper grounding, and unstable power supplies.

The Device Dashboard presents the diagnostics in a graphical, task-based interface that provides single-click access to critical process/device information and descriptive graphical troubleshooting.

Local operator interface

The LOI utilizes a 2 button menu with internal and external configuration buttons. Internal buttons are always configured for Local Operator Interface. External Buttons can be configured for either LOI (option code M4), Analog Zero and Span (option code D4) or Digital Zero Trim (option code DZ). See Rosemount 3051 product manual (00809-0100-4007) for LOI configuration menu.

FOUNDATION fieldbus (output code F)

Power supply

External power supply required; transmitters operate on 9.0 to 32.0 V dc transmitter terminal voltage. FISCO transmitters operate on 9.0 to 17.5 V dc.

Current draw

17.5 mA for all configurations (including LCD display option)

Indication

Optional 2-line LCD display

FOUNDATION fieldbus block execution times

Block	Execution time
Resource	N/A
Sensor and SPM Transducer	N/A
LCD Display	N/A
Analog Input 1, 2	20 milliseconds
PID	25 milliseconds
Input Selector	20 milliseconds
Arithmetic	20 milliseconds
Signal Characterizer	20 milliseconds
Integrator	20 milliseconds
Output Splitter	20 milliseconds
Control Selector	20 milliseconds

FOUNDATION fieldbus parameters

Links	25 (max.)
Virtual Communications Relationships (VCR)	20 (max.)

FOUNDATION fieldbus function blocks (option A01)

Resource block

The resource block contains diagnostic, hardware, and electronics information. There are no linkable inputs or outputs to the Resource Block.

Sensor transducer block

The sensor transducer block contains sensor information and the ability to calibrate the pressure sensor or recall factory calibration.

LCD transducer block

The LCD transducer block is used to configure the LCD display meter.

Analog input (AI) block

The AI block processes the measurements from the sensor and makes them available to other function blocks. The output value from the AI block is in engineering units and contains a status indicating the quality of the measurement. The AI Block is widely used for scaling functionality.

Input selector (ISEL) block

The ISEL block can be used to select the first good, hot backup, maximum, minimum, or average of as many as eight input values and place it at the output. The block supports signal status propagation.

Integrator (INT) block

The INT block integrates one or two variables over time. The block compares the integrated or accumulated value to pre-trip and trip limits and generates discrete output signals when the limits are reached.

The INT block is used as a totalizer. This block will accept up to two inputs, has six options how to totalize the inputs, and two trip outputs.

Arithmetic (ARTH) block

The ARTH block provides the ability to configure a range extension function for a primary input. It can also be used to compute nine different arithmetic functions including flow with partial density compensation, electronic remote seals, hydrostatic tank gaging, ratio control, and others.

Signal characterizer (SGCR) block

The SGCR block characterizes or approximates any function that defines an input/output relationship. The function is defined by configuring as many as twenty X,Y coordinates. The block interpolates an output value for a given input value using the curve defined by the configured coordinates. Two separate analog input signals can be processed simultaneously to give two corresponding separate output values using the same defined curve.

PID block

The PID function block combines all of the necessary logic to perform proportional/integral/derivative (PID) control. The block supports mode control, signal scaling and limiting, feed forward control, override tracking, alarm limit detection, and signal status propagation.

Control selector block

The control selector function block selects one of two or three inputs to be the output. The inputs are normally connected to the outputs of PID or other function blocks. One of the inputs would be considered normal and the other two overrides.

Output splitter block

The output splitter function block provides the capability to drive two control outputs from a single input. It takes the output of one PID or other control block to control two valves or other actuators.

Backup Link Active Scheduler (LAS)

The transmitter can function as a Link Active Scheduler if the current link master device fails or is removed from the segment.

FOUNDATION fieldbus Diagnostics Suite (option code D01)

The 3051C FOUNDATION fieldbus Diagnostics Suite features SPM technology to detect changes in the process, process equipment, or installation conditions (such as plugged impulse lines) of the transmitter. This is done by modeling the process noise signature (using the statistical values of mean and standard deviation) under normal conditions and then comparing the baseline values to current values over time. If a significant change in the current values is detected, the transmitter can generate an alert.

PROFIBUS PA (output code W)

Profile version

3.02

Power supply

External power supply required; transmitters operate on 9.0 to 32.0 Vdc transmitter terminal voltage.

Current draw

17.5 mA for all configurations (including LCD display option)

Output update rate

Four times per second

Standard function blocks

Analog input (AI block)

The AI function block processes the measurements and makes them available to the host device. The output value from the AI block is in engineering units and contains a status indicating the quality of the measurement.

Physical block

The physical block defines the physical resources of the device including type of memory, hardware, electronics and diagnostic information.

Transducer block

Contains actual sensor measurement data including the sensor diagnostics and the ability to trim the pressure sensor or recall factory defaults.

Indication

Optional 2-line LCD display

Local operator interface

Optional external configuration buttons

Wireless (output code X)

Output

IEC 62591 (*Wireless*HART), 2.4 GHz DSSS

Wireless radio (internal antenna, WP5 option)

- Frequency: 2.400 - 2.485 GHz
- Channels: 15
- Modulation: IEEE 802.15.4 compliant DSSS
- Transmission: Maximum of 10 dBm EIRP

Local display

The optional 3-line, 7-digit LCD display can display user-selectable information such as primary variable in engineering units, scaled variable, percent of range, sensor module temperature, and electronics temperature. The display updates based on the wireless update rate.

Digital zero trim

Digital Zero trim (option DZ) is an offset adjustment to compensate for mounting position effects, up to 5% of URL.

Update rate

User selectable 1 sec. to 60 min.

Wireless sensor module for in-line transmitters

The 3051 Wireless transmitter requires the engineered polymer housing to be selected. The standard sensor module will come with aluminum material. If stainless steel is required, the option WSM must be selected.

Power module

Field replaceable, keyed connection eliminates the risk of incorrect installation, Intrinsically Safe Lithium-thionyl chloride Power Module with PBT/PC enclosure. Ten-year life at one minute update rate.(1)

(1) Reference conditions are 70 °F (21 °C), and routing data for three additional network devices.

Note: Continuous exposure to ambient temperature limits of -40 °F or 185 °F (-40 °C or 85 °C) may reduce specified life by less than 20 percent.

1-5 Vdc HART low power (output code M)

Output

Three wire 1-5 Vdc or 0.8-3.2 Vdc (Option Code C2) user-selectable output. Also user selectable for linear or square root output configuration. Digital process variable superimposed on voltage signal, available to any host conforming to the HART protocol. Low-power transmitter operates on 6-12 Vdc with no load.

Power consumption

3.0 mA, 18-36 mW

Minimum load impedance

100 kΩ (V_{out} wiring)

Indication

Optional 5-digit LCD display

Burst pressure limits

3051CF

10000 psig (69 MPa)

Failure mode alarm

If self-diagnostics detect a sensor or microprocessor failure, the analog signal is driven either high or low to alert the user. High or low failure mode is user-selectable with a jumper on the transmitter. The values to which the transmitter drives its output in failure mode depend on whether it is factory-configured to standard or NAMUR-compliant operation. The values for each are as follows:

Standard operation			
Output code	**Linear output**	**Fail high**	**Fail low**
A	$3.9 \le I \le 20.8$	$I \ge 21.75$ mA	$I \le 3.75$ mA
M	$0.97 \le V \le 5.2$	$V \ge 5.4$ V	$V \le 0.95$ V

NAMUR-compliant operation			
Output code	**Linear output**	**Fail high**	**Fail low**
A	$3.8 \le I \le 20.5$	$I \ge 22.5$ mA	$I \le 3.6$ mA

Low power output

1-5 Vdc HART Low Power (output code M)

Output

Three-wire 1-5 Vdc (option code C2) user-selectable output. Also user selectable for linear or square root output configuration. Digital process variable superimposed on voltage signal, available to any host conforming to the HART protocol. Low-power transmitter operates on 6-12 Vdc with no load.

Power consumption

3.0 mA, 18-36 mW

Minimum load impedance

100 kΩ (V_{out} wiring)

Indication

Optional 5-digit LCD display

Output code F, W, and X

If self-diagnostics detect a gross transmitter failure, that information gets passed as a status along with the process variable.

Temperature limits

For 3051CFC temperature limits

Process temperature limits

Direct mount transmitter

- -40 to 450 °F (-40 to 232 °C)
- Up to 400 °F (204 °C) when top mounted in steam service

Remote mount transmitter

- -148 to 850 °F (-100 to 454 °C) – Stainless Steel

Differential pressure limits

Maximum differential pressure (DP) up to 800 inH_2O (2 bar).

Note
When the temperature is 400-850 °F (204-454 °C), the DP Limit should be 400 inH2O (1 bar).

A.1.6 Rosemount 2051CF functional specifications

Table A-9. Range and sensor limits

Range	2051CF minimum span	Range and sensor limits
1	0.5 inH_2O (1,24 mbar)	0 to 25 inH_2O (62,16 mbar)
2	2.5 inH_2O (4,14 mbar)	0 to 250 inH_2O (0,62 bar)
3	6.67 inH_2O (16,58 mbar)	0 to 1000 inH_2O (2,49 bar)

Service

Liquid, gas, and steam applications

Protocols

4–20 mA HART (Output Code A)

Output

Two-wire 4–20 mA, user-selectable for linear or square root output. Digital process variable superimposed on 4–20 mA signal, available to any host that conforms to the HART protocol.

Power supply

External power supply required. Standard transmitter operates on 10.5 to 42.4 Vdc with no load.

Turn-on time

Performance within specifications less than 2.0 seconds after power is applied to the transmitter.

Load limitations

Maximum loop resistance is determined by the voltage level of the external power supply, as described by:

Maximum Loop Resistance = 43.5 * (Power Supply Voltage – 10.5)

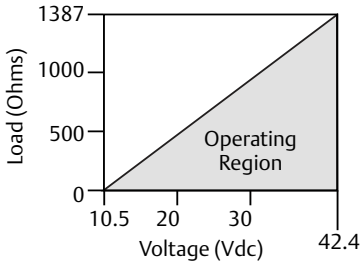

The Field Communicator requires a minimum loop resistance of 250Ω for communication.

FOUNDATION fieldbus (Output Code F)

Power supply

External power supply required; transmitters operate on 9.0 to 32.0 Vdc transmitter terminal voltage for non-I.S. applications, 9.0 to 30 Vdc for entity model intrinsically safe applications and 9.0 to 17.5 Vdc for FISCO intrinsically safe applications.

Current draw

17.5 mA for all configurations (including LCD display option)

Indication

Optional 2-line LCD display

FOUNDATION fieldbus function block Execution times

Block	Execution time
Resource	N/A
Transducer	N/A
LCD Display Block	N/A
Analog Input 1, 2	20 milliseconds
PID	25 milliseconds
Arithmetic	20 milliseconds
Input Selection	20 milliseconds
Signal Characterizer	20 milliseconds
Integrator	20 milliseconds
Output Splitter	20 milliseconds
Control Selector	20 milliseconds

FOUNDATION fieldbus parameters

Schedule Entries	7 (max.)
Links	25 (max.)
Virtual Communications Relationships (VCR)	20 (max.)

Standard function blocks

Resource block

The resource block contains diagnostic, hardware and electronics information. There are no linkable inputs or outputs to the Resource Block.

Sensor transducer block

The sensor transducer block contains sensor information including the sensor diagnostics and the ability to trim the pressure sensor or recall factory calibration.

LCD display transducer block

The LCD display transducer block is used to configure the LCD display meter.

Analog input (AI) block

The AI block processes the measurements from the sensor and makes them available to other function blocks. The output value from the AI block is in engineering units and contains a status indicating the quality of the measurement. The AI block is widely used for scaling functionality.

Note
The channel, Set XD_Scale, Set L_Type, and sometimes Set Out_Scale are typically configured by instrument personnel. Other AI block parameters, block links, and schedule are typically configured by the control systems configuration engineer.

Input selector (ISEL) block

The ISEL block can be used to select the first good, Hot Backup™, maximum, minimum, or average of as many as eight input values and place it at the output. The block supports signal status propagation.

Integrator (INT) block

The INT block integrates one or two variables over time. The block compares the integrated or accumulated value to pre-trip and trip limits and generates discrete output signals when the limits are reached.

The INT block is used as a totalizer. This block will accept up to two inputs, has six options how to totalize the inputs, and two trip outputs.

Arithmetic (ARTH) block

The ARTH block provides the ability to configure a range extension function for a primary input. It can also be used to compute nine different arithmetic functions including flow with partial density compensation, electronic remote seals, hydrostatic tank gauging, ratio control and others.

Signal characterizer (SGCR) block

The SGCR block characterizes or approximates any function that defines an input/output relationship. The function is defined by configuring as many as twenty X,Y coordinates. The block interpolates an output value for a given input value using the curve defined by the configured coordinates. Two separate analog input signals can be processed simultaneously to give two corresponding separate output values using the same defined curve.

PID block

The PID function block combines all of the necessary logic to perform proportional/integral/derivative (PID) control. The block supports mode control, signal scaling and limiting, feed forward control, override tracking, alarm limit detection, and signal status propagation.

Control selector block

The control selector Function Block selects one of two or three inputs to be the output. The inputs are normally connected to the outputs of PID or other function blocks. One of the inputs would be considered Normal and the other two overrides.

Output splitter block

The output splitter function block provides the capability to drive two control outputs from a single input. It takes the output of one PID or other control block to control two valves or other actuators.

Backup Link Active Scheduler (LAS)

The transmitter can function as a LAS if the current link master device fails or is removed from the segment.

PROFIBUS PA (Output Code W)

Profile version

3.02

Power supply

External power supply required; transmitters operate on 9.0 to 32.0 Vdc transmitter terminal voltage for non-I.S. applications, 9.0 to 30 Vdc for entity model intrinsically safe applications and 9.0 to 17.5 Vdc for FISCO intrinsically safe applications.

Current draw

17.5 mA for all configurations (including LCD display option)

Output update rate

Four times per second

Standard function blocks

Analog Input (AI Block)

The AI function block processes the measurements and makes them available to the host device. The output value from the AI block is in engineering units and contains a status indicating the quality of the measurement.

Physical block

The physical block defines the physical resources of the device including type of memory, hardware, electronics, and diagnostic information.

Transducer block

Contains actual sensor measurement data including the sensor diagnostics and the ability to trim the pressure sensor or recall factory defaults.

Indication

Optional 2-line LCD display

LOI

Optional external configuration buttons.

Wireless (Output Code X)

Output

IEC 62591 (*Wireless*HART), 2.4 GHz DSSS

Wireless radio (internal antenna, WP5 option)

- Frequency: 2.400 - 2.485 GHz
- Channels: 15
- Modulation: IEEE 802.15.4 compliant DSSS
- Transmission: Maximum of 10 dBm EIRP

Local display

The optional 3-line, 7-digit LCD display can display user-selectable information such as primary variable in engineering units, scaled variable, percent of range, sensor module temperature, and electronics temperature. The display updates based on the wireless update rate.

Digital zero trim

Digital Zero trim (option DZ) is an offset adjustment to compensate for mounting position effects, up to 5% of URL.

Update rate

User selectable 1 sec. to 60 min.

Wireless sensor module for In-Line transmitters

The 2051 Wireless Transmitter requires the engineered polymer housing to be selected. The standard sensor module will come with aluminum material. If stainless steel is required, the option WSM must be selected.

Power module

Field replaceable, keyed connection eliminates the risk of incorrect installation, Intrinsically Safe Lithium-thionyl chloride Power Module with PBT/PC enclosure. Ten-year life at one minute update rate.(1)

(1) Reference conditions are 70 °F (21 °C), and routing data for three additional network devices.

Note: Continuous exposure to ambient temperature limits of -40 °F to 185 °F (-40 °C to 85 °C) may reduce specified life by less than 20 percent.

HART 1-5 Vdc Low Power (Output Code M)

Output

Three wire 1–5 Vdc output, user-selectable for linear or square root output. Digital process variable superimposed on voltage signal, available to any host conforming to the *HART* protocol.

2051

Digital communications based on HART Revision 5 protocol.

2051 with selectable HART

The 2051 with Selectable HART comes with Selectable HART Revisions. Digital communications based on HART Revision 5 (default) or Revision 7 (option code HR7) protocol can be selected. The HART revision can be switched in the field using any HART based configuration tool or the optional local operator interface (LOI).

LOI

The LOI utilizes a 2 button menu with internal and external configuration buttons. Internal buttons are always configured for Local Operator Interface. External Buttons can be configured for either LOI, (option code M4), Analog Zero and Span (option code D4) or Digital Zero Trim (option code DZ). See 2051 with Selectable HART product manual (00809-0100-4107) for LOI configuration menu.

Power supply

External power supply required. Standard transmitter operates on 9 to 28 Vdc with no load.

Power consumption

3.0 mA, 27–84 mW

Output load

100 kΩ or greater (meter input impedance)

Turn-on time

Performance within specifications less than 2.0 seconds after power is applied to the transmitter.

Overpressure limits

Transmitters withstand the following limits without damage:

2051CF Flowmeters

- Ranges 2–5: 3626 psig (250 bar)
  4500 psig (310,3 bar) for Option Code P9
- Range 1: 2000 psig (137,9 bar)

Static pressure limit

- Operates within specifications between static line pressures of -14.2 psig (0.034 bar) and 3626 psig (250 bar)
- Range 1: 0.5 psia to 2000 psig (34 mbar and 137,9 bar)

Burst pressure limits

2051CF

- 10000 psig (689,5 bar)

Temperature limits

For 2051CFC temperature limits-process temperature limits

Direct Mount Transmitter

- -40 to 450 °F (-40 to 232 °C)
- Up to 400 °F (204 °C) when top mounted in steam service

Remote Mount Transmitter

- -148 to 850 °F (-100 to 454 °C) – Stainless Steel

Transmitter temperature limits

Ambient[1]

–40 to 185 °F (–40 to 85 °C)

With LCD display[2]: –40 to 175 °F (–40 to 80 °C)

Storage[1]

–50 to 230 °F (–46 to 110 °C)

With LCD display: –40 to 185 °F (–40 to 85 °C)

(1) Limits for silicone fill fluid only.
(2) LCD display may not be readable and LCD display updates will be slower at temperatures below -4 °F (-20 °C).

Remote mount transmitter temperature limits

At atmospheric pressures and above.

2051C	
Silicone Fill Sensor[1]	–40 to 250 °F (–40 to 121 °C)
Inert Fill Sensor[1]	–40 to 185 °F (–40 to 85 °C)

(1) Process temperatures above 185 °F (85 °C) require derating the ambient limits by a 1.5:1 ratio.

Humidity limits

0–100% relative humidity

Volumetric displacement

Less than 0.005 in^3 (0,08 cm^3)

Damping

Analog output response to a step input change is user-selectable from 0 to 25.6 seconds for one time constant. This software damping is in addition to sensor module response time.

Failure mode alarm

If self-diagnostics detect a sensor or microprocessor failure, the analog signal is driven either high or low to alert the user. High or low failure mode is user-selectable with a jumper on the transmitter. The values to which the transmitter drives its output in failure mode depend on whether it is factory-configured to standard or NAMUR-compliant operation. The values for each are as follows:

Standard operation			
Output code	**Linear output**	**Fail high**	**Fail low**
A	3.9 ≤ I ≤ 20.8	I ≥ 21.75 mA	I ≤ 3.75 mA
M	0.97 ≤ V ≤ 5.2	V ≥ 5.4 V	V ≤ 0.95 V

NAMUR-compliant operation			
Output code	**Linear output**	**Fail high**	**Fail low**
A	3.8 ≤ I ≤ 20.5	I ≥ 22.5 mA	I ≤ 3.6 mA

Output code F

If self-diagnostics detect a gross transmitter failure, that information gets passed as a status along with the process variable.

Table A-10. Long term stability

Models	Standard	Performance option, P8
2051CF Range 1 (CF) Ranges 2-5	±0.2% of URL for 1 year, Reference Stability ±0.1% of URL for 2 years, Operating Stability	±0.125% of URL for 5 years, Operating Stability

Table A-11. Dynamic performance

	4 - 20 mA HART[1] 1 - 5 Vdc HART Low Power	FOUNDATION fieldbus[3]	Typical HART transmitter response time
Total response time ($T_d + T_c$) [2]:			
2051CF Range 3-5: Range 1: Range 2:	 115 milliseconds 270 milliseconds 130 milliseconds	 152 milliseconds 307 milliseconds 152 milliseconds	
Dead Time (Td)	60 milliseconds (nominal)	97 milliseconds	
Update Rate	22 times per second	22 times per second	

(1) Dead time and update rate apply to all models and ranges; analog output only.
(2) Nominal total response time at 75 °F (24 °C) reference conditions.
(3) Transmitter fieldbus output only, segment macro-cycle not included.

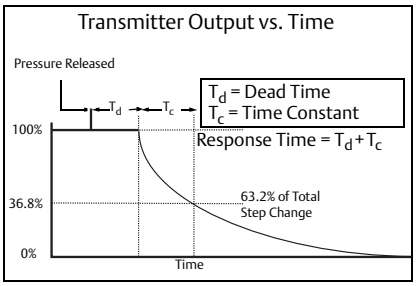

Vibration effect for 2051CFC

Less than ±0.1% of URL when tested per the requirements of IEC60770-1 field or pipeline with high vibration level (10-60 Hz 0.21mm displacement peak amplitude/60-2000 Hz 3g).

Vibration effect for 2051CFC_A

Less than ±0.1% of URL when tested per the requirements of IEC60770-1 field or pipeline with high vibration level (10-60 Hz, 0.15mm displacement peak amplitude/ 60-2000 Hz 2g).[1]

(1) Stainless steel temperature housing is not recommended with primary element technology A in applications with mechanical vibration.

A.1.7 Rosemount 3051SF physical specifications

Safety-certified transmitter failure values(1)

Safety accuracy: 2.0%(2)
Safety response time: 1.5 seconds

(1) Does not apply to wireless option code X.
(2) A 2% variation of the transmitter mA output is allowed before a safety trip. Trip values in the DCS or safety logic solver should be derated by 2%.

Electrical connections

1/2–14 NPT, G1/2, and M20 × 1.5 conduit. HART interface connections fixed to terminal block for Output code A and X.

Process connections

Coplanar sensor module	
Standard	1/4-18 NPT on 2 1/8-in. centers

Process-wetted parts

For 3051SFC wetted parts, see "Physical details" on page 92.

Process isolating diaphragms

Coplanar sensor module
316L SST (UNS S31603), Alloy C-276 (UNS N10276), Alloy 400 (UNS N04400), Tantalum (UNS R05440), Gold-Plated Alloy 400, Gold-plated 316L SST

Drain/vent valves

316 SST, Alloy C-276, or Alloy 400/K-500 material
(Drain vent seat: Alloy 400, Drain vent stem: Alloy K-500)

Process flanges and adapters

Plated carbon steel
SST: CF-8M (Cast 316 SST) per ASTM A743
Cast C-276: CW-12MW per ASTM A494
Cast Alloy 400: M-30C per ASTM A494

Non-wetted parts

Electronics housing

Low-copper aluminum alloy or CF-8M (Cast 316 SST)
NEMA 4X, IP 66, IP 68 (66 ft (20 m) for 168 hours)
Note: IP 68 not available with Wireless Output.

Paint for aluminum housing

Polyurethane

Coplanar sensor module housing

SST: CF-3M (Cast 316L SST)

Bolts

Plated carbon steel per ASTM A449, Type 1
Austenitic 316 SST per ASTM F593
ASTM A453, Class D, Grade 660 SST
ASTM A193, Grade B7M alloy steel
ASTM A193, Class 2, Grade B8M SST
Alloy K-500

Sensor module fill fluid

Silicone or inert halocarbon

Cover O-rings

Nitirile Butadiene (NBR)

Wireless antenna

PBT/polycarbonate (PC) integrated omni-directional antenna

Power module

Field replaceable, keyed connection eliminates the risk of incorrect installation, Intrinsically Safe Lithium-thionyl chloride power module with PBT enclosure.

Pipe orientation

Pipe orientation for Compact Flowmeters.

Orientation/flow direction	Process[1]		
	Gas	Liquid	Steam
Horizontal	D/R	D/R	D/R
Vertical Up	R	D/R	R
Vertical Down	D/R	NR	NR

(1) D = Direct mount acceptable (recommended)
R = Remote mount acceptable
NR = Not recommended

Pipe centering

Improper centering of any orifice type device can cause an error of up to ±5% in small line sizes. A centering mechanism (centering ring) independent of flange rating comes standard with the 405 Compact Series.

Figure A-1. Conditioning Orifice

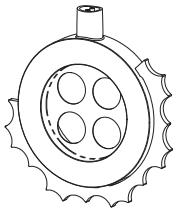

A.1.8 Rosemount 3051CF physical specifications

Electrical connections

1/2–14 NPT, PG 13.5, G1/2, and M20 × 1.5 (CM20) conduit. *HART* interface connections fixed to terminal block.

Process connections

For 3051CFC-material of construction

- 316/316L SST

Orifice plate

- 316/316L SST
- Alloy C-276
- Alloy 400

Body

- 316 SST (CF8M), material per ASTM A351

Pipe material (if applicable)

- A312 Gr 316/316L

Flange

- A182 Gr 316/316L
- Flange pressure limits are per ANSI B16.5
- Flange face finish per ANSI B16.5, 125 to 250 RMS

Body bolts/studs

- ASTM A193 Gr B8M studs
- ASTM A193 Gr B8M Class 2 body studs provided for high temperature Option Code G

Transmitter connection studs

- ASTM A193 Gr B8M studs

Gaskets/O-rings

- Glass filled PTFE
- Alloy X-750 provided for high temperature Option Code G
- Gaskets and O-rings must be replaced each time the 3051SFP is disassembled for installation or maintenance.

Orifice type

Square edge–orifice bore sizes

- 0.066-in. and larger

Quadrant edge–orifice bore sizes (for 1/2-in. (15 mm) line size only)

- 0.034-in. (0.86 mm)
- 0.020-in. (0.51 mm)
- 0.014-in. (0.35 mm)
- 0.010-in. (0.25 mm)

Note
Integral orifice bodies contain corner tapped pressure ports.

Process-wetted parts

Drain/vent valves

316 SST, Alloy C-276, or Alloy 400 material (Alloy 400 not available with 3051L)

Process flanges and adapters

Plated carbon steel, SST cast CF-8M (cast version of 316 SST, material per ASTM-A743), C-Type cast alloy CW12MW, or cast alloy M30C

Wetted O-rings

Glass-filled PTFE or Graphite-filled PTFE

Table A-12. Process isolating diaphragms

Isolating diaphragm material	3051CD 3051CG
Alloy C-276	•
Alloy 400	•
Tantalum	•
Gold-plated Alloy 400	•
Gold-plated SST	•

Non-wetted parts

Electronics housing

Low-copper aluminum or CF-8M (Cast version of 316 SST). Enclosure Type 4X, IP 65, IP 66, IP 68

Coplanar sensor module housing

CF-3M (Cast version of 316L SST, material per ASTM-A743)

Bolts

TM A449, Type 1 (zinc-cobalt plated carbon steel)
ASTM F593G, Condition CW1 (Austenitic 316 SST)
ASTM A193, Grade B7M (zinc plated alloy steel)
Alloy K-500

Sensor module fill fluid

Silicone oil (D.C. 200)

Paint

Polyurethane

Cover O-rings

Nitirile Butadiene (NBR)

A.1.9 Rosemount 2051CF physical specifications

Electrical connections

1/2–14 NPT, G1/2, and M20 × 1.5 conduit.

2051CF process-wetted parts

For 2051CFC wetted parts-material of construction

Body/Plate

- 316/316L SST
- 50 micro-inch Ra surface finish

Manifold Head/Valves

- 316 SST

Flange Studs and Nuts

- Customer supplied
- Available as a spare part

Transmitter Connection Studs and Nuts

- Studs– A193 Grade B8M.
- Nuts– A194 Grade 8M.

Gasket and O-rings

- Gaskets are customer supplied.
- Durlon 8500 fiber gaskets are recommended. Consult an Emerson Process Management representative for use with other gaskets.
- Available as a spare part

Note
Gaskets and O-rings should be replaced when the 405 is disassembled.

Process isolating diaphragms

316L SST, Alloy C-276, or Tantalum

Non-wetted parts for 2051CF

Electronics housing

Low-copper aluminum or CF-8M (Cast version of 316 SST). Enclosure Type 4X, IP 65, IP 66, IP68

Coplanar sensor module housing

CF-3M (Cast version of 316L SST)

Bolts

ASTM A449, Type 1 (zinc-cobalt plated carbon steel)
ASTM F593G, Condition CW1 (Austenitic 316 SST)
ASTM A193, Grade B7M (zinc plated alloy steel)

Sensor module fill fluid

Silicone oil (D.C. 200) or Fluorocarbon oil

Paint

Polyurethane

Cover O-rings

Nitirile Butadiene (NBR)



Rosemount 405 Compact Primary Element utilizes an easy to install direct mount primary element assembly.

- Available with Conditioning Orifice Plate Primary Element Technology or Compact Annubar Primary Element Technology
- 405P/C orifice primary elements are based on ASME/ISO corner tap design
- Available in 1/2 to 12-in. (15 - 300 mm) line sizes

Table A-13. Rosemount 405 Compact Primary Element Ordering Information

★ The Standard offering represents the most common options. The starred options (★) should be selected for best delivery.
The Expanded offering is subject to additional delivery lead time.

Model	Product description	
405	Compact Primary Element	
Primary element technology		
A	Annubar Averaging Pitot Tube	★
C	Conditioning Orifice Plate	★
P	Orifice Plate	★
Material type		
S	316 SST	★
Line size		
005[(1)]	1/2-in. (15 mm)	★
010[(1)]	1-in. (25 mm)	★
015[(1)]	1 1/2-in. (40 mm)	★
020	2-in. (50 mm)	★
030	3-in. (80 mm)	★
040	4-in. (100 mm)	★
060	6-in. (150 mm)	★
080	8-in. (200 mm)	★
100[(2)(3)]	10-in. (250 mm)	★
120[(2)(3)]	12-in. (300 mm)	★
Temperature measurement		
N	No Temperature Measurement	★
T[(4)]	Integral RTD	★
Primary element type		
000	Annubar Sensor Size 1	★
040	0.40 Beta Ratio (β)	★
050	0.50 Beta Ratio (β)	★
065[(5)]	0.65 Beta Ratio (β)	★

Table A-13. Rosemount 405 Compact Primary Element Ordering Information

★ The Standard offering represents the most common options. The starred options (★) should be selected for best delivery.
The Expanded offering is subject to additional delivery lead time.

Transmitter connection		
D3	Direct mount	★
R3	Remote mount, NPT connections	★
A3[6]	Traditional, Direct mount, 3-valve Integral Manifold with adapter plate, SST	

Options (include with selected model number)

Installation accessories		
A	ANSI Alignment Ring (150#)	★
C	ANSI Alignment Ring (300#)	★
D	ANSI Alignment Ring (600#)	★
G	DIN Alignment Ring (PN 16)	★
Installation accessories		
H	DIN Alignment Ring (PN 40)	★
J	DIN Alignment Ring (PN 100)	★
B	JIS Alignment Ring (10K)	
R	JIS Alignment Ring (20K)	
S	JIS Alignment Ring (40K)	
Remote adapters		
E	Flange adapters 316 SST (1/2-in. NPT)	★
High temperature application		
T	Graphite valve packing (Tmax = 850 °F)	
Flow calibration		
WC[7]	Flow Calibration, 3 Pt, Conditioning Orifice Option C (all Pipe Schedules)	
WD[8][9]	Flow Calibration, 10 Pt, Conditioning Option C (all Schedules), Annubar Option A (Schedule 40)	
Pressure testing		
P1	Hydrostatic testing	
Special cleaning		
P2[10]	Cleaning for Special Processes	
PA	Cleaning per ASTM G93 Level D (section 11.4)	
Special inspection		
QC1	Visual & Dimensional Inspection with Certificate	★
QC7	Inspection & Performance Certificate	★
Material traceability certification		
Q8	Material Traceability Certification per EN10204:2004 3.1	★
Code conformance		

Table A-13. Rosemount 405 Compact Primary Element Ordering Information

★ The Standard offering represents the most common options. The starred options (★) should be selected for best delivery.
The Expanded offering is subject to additional delivery lead time.

J2	ANSI/ASME B31.1	
J3	ANSI/ASME B31.3	
J4	ANSI/ASME B31.8	
Materials conformance		
J5[(11)]	NACE MR-0175 / ISO 15156	
Country certification		
J1	Canadian Registration	
Typical model number: 405 C S 040 N 040 D3		

(1) Available with primary element technology P only.
(2) For the 10-in. (250 mm) and 12-in. (300 mm) line size, the alignment ring must be ordered (Installation Accessories).
(3) 10-in. (250 mm) and 12-in. (300 mm) line sizes not available with Primary Element Technology A.
(4) Available with Primary Element Technology A only.
(5) For 2-in. (50 mm) line sizes the Beta Ratio is 0.6 for Primary Element Type code C.
(6) A3 transmitter connection available with primary element technology C or P only.
(7) Available with primary element technology C only.
(8) Available with primary element technology C or A only.
(9) For Annubar Option A, consult factory for pipe schedules other than Sch. 40.
(10) Available with primary element technology C or P only
(11) Materials of Construction comply with metallurgical requirements within NACE MR0175/ISO for sour oil field production environments. Environmental limits apply to certain materials. Consult latest standard for details. Selected materials also conform to NACE MR0103 for sour refining environments.

A.2 Specifications

A.2.1 Rosemount 405 performance specifications

Table A-14. 405C Compact Conditioning Orifice Technology

Beta ratio	Discharge coefficient uncertainty
β = 0.40	±0.50%
β = 0.50	±1.00%
β = 0.65(1)	±1.00%

(1) For 0.65 beta and ReD< 10,000 add an additional 0.5% to the Discharge Coefficient Uncertainty.

Table A-15. 405P Compact Orifice Technology

Line size	Discharge coefficient uncertainty
1/2-in.(15 mm)	±2.25%
1 to 1 1/2-in. (25 to 40 mm) line size	±1.75%
2 to 12-in. (50 to 300 mm) line size	±1.25%

Table A-16. 405A Compact Annubar Technology

K Factor uncertainty		
All Sizes	Uncalibrated	±1.50%
	Calibrated	±0.75%

Line sizes

- 1/2-in. (15 mm) – not available for the 405C and 405A
- 1-in. (25 mm) – not available for the 405C and 405A
- 1 1/2-in. (40 mm) – not available for the 405C and 405A
- 2-in. (50 mm)
- 3-in. (80 mm)
- 4-in. (100 mm)
- 6-in. (150 mm)
- 8-in. (200 mm)
- 10-in. (250 mm) – not available for the 405A
- 12-in. (300 mm) – not available for the 405A

Sizing

Contact an Emerson Process Management sales representative assistance. A “Configuration Data Sheet” is required prior to order for application verification.

A.2.2 Rosemount 405 functional specifications

Service

- Liquid
- Gas
- Vapor

Process temperature limits

Direct mount transmitter

- -40 to 450 °F (-40 to 232 °C)
- Up to 400 °F (204 °C) when top mounted in steam service

Remote mount transmitter

- -148 to 850 °F (-100 to 454 °C) – Stainless Steel

Differential pressure limits for primary element technology C and P for all sizes

Table A-17. Maximum Allowable DP [Measurement in inH2O (bar)]

Max DP < 400 °F (200 °C)	Max DP = 400-800 °F (200-454 °C)
800 inH_20 (2bar)	400 inH_20 (1bar)

Differential pressure limits for primary element technology A

Table A-18. Maximum Allowable DP (Measurement in inH_2O [bar])

Line size	Max DP @ < 450 °F (200 °C)	Max DP @ 450-850 °F (200-454 °C)
2 (50 mm)	1500 (3.73)	1500 (3.73)
3 (80 mm)	900 (2.24)	790 (1.97)
4 (100 mm)	570 (1.42)	500 (1.24)
6 (150 mm)	290 (0.72)	250 (0.62)
8 (200 mm)	190 (0.47)	160 (0.40)

Maximum working pressure

Pressure retention per ANSI B16.5 600# or DIN PN100

Vibration effect for 405A, 405C, and 405P

Qualified per IEC61298-3 (2008) for field with general application or pipeline with low vibration level (10-1000 Hz test frequency range, 0.15 mm displacement peak amplitude, 20 m/s^2 acceleration amplitude).(1)

The weight and length of the transmitter assembly shall not exceed 9.8 lbs (4.45 kg) and 8.60-in. (218.44 mm).

Assembly to a transmitter

Select option code C11 for the Rosemount 3051S Transmitter (or option code S3 for the Rosemount 3051C or 2051C Transmitter) to factory assemble the Rosemount 405 to a Rosemount Pressure Transmitter. If the 405 and transmitter are not factory assembled, they may be shipped separately. For a consolidated shipment, inform the Emerson Process Management representative when placing the order.

(1) Stainless steel temperature housing is not recommended with primary element technology A in applications with mechanical vibration.

A.2.3 Rosemount 405 physical specifications

Temperature measurement for primary element technology P and C

Integral RTD(1)

- 100 Ohm platinum RTD temperature sensor assembly (316 SST Mineral Insulated Cable) with 1/4-in. NPT connection to wafer side and 1/2-in. NPT connection to transmitter RTD sensor is separated from process fluid by 1/16-in. and is pressure retaining rated for ANSI 600#. Complies with IEC-751 Class B accuracy. Meets Intrinsic Safety certification.

(1) Only available with 3051SFC Compact Orifice Flowmeter models.

Remote RTD(1)

- 100 Ohm platinum with 1/2-in. NPT nipple and union (078 series with Rosemount 644 housing) Model 0078D21N00A025T32Ex Connection Head: 00644-4410-0011
- Standard RTD cable is shielded armored cable, length is 12 ft. (3.66 m)
- Remote RTD material is SST Thermowell
- 1/2-in. x 1/2-in. NPT, 316 SST

(1) Only available with 3051SFC, 3051CFC or 2051CFC Compact Orifice Flowmeter models.

Temperature measurement for primary element technology A

Integral RTD

- 100 Ohm platinum RTD
- 4-wire RTD (a = 0.00385)

Physical details

Body

- 316/316L SST

Manifold head/valves

- 316 SST

Orifice plate for primary element technologies C and P

- 50 micro-inch Ra surface finish

Annubar primary element for primary element technology A

- Roughened surface finish

Flange studs and nuts

- Customer supplied
- Available as a spare part

Transmitter connection studs and nuts

- Studs– A193 Grade B8M
- Nuts– A194 Grade 8M

Gasket and O-rings

- Gaskets are customer supplied.
- Gaskets and O-rings are available as spare parts.

Note
Gaskets and O-rings should be replaced when the 405 is disassembled.

Transmitter connections

Direct mount

- Available with Rosemount 3051SMV, 3051S, 3051, and 2051 transmitters, ranges 1, 2, and 3.

Remote mount

- Primary element technology C or P available with 1/4-in. NPT (standard) or 1/2-in. NPT (option code E) connections.
- Remote Mount transmitter connections available with 1/2-in. NPT for primary element technology A.

Orifice plate design

Orifice type

- Square edged

Orifice pressure taps

- Corner

Alignment rings

Table A-19. Mounts Between the Following Flange Configurations

ASME B16.5 (ANSI)	DIN	JIS
Class 150 Class 300 Class 600	PN16 (option code G) PN40 (option code H) PN100 (option code H)	10k (option code B) 20k (option code R) 40k (option code S)

ANSI 150 - 600# alignment ring is included as standard when ordering for up to 8-in. line size. For the 10-in. and 12-in. line size, the alignment ring must be ordered (Installation Accessories).

Typical orifice hole sizes

For 405C, beta is calculated by: $\beta = d_C$ / Pipe ID(1), where the calculated bore is equal to 2 x typical orifice hole size ($d_C = 2d$). The tables below show the diameter of the typical orifice holes.

(1) Based on Schedule 40.

Table A-20. $\beta = 0.4$ (Measurement in inches [mm])(1)

Line size	405C	405P
1/2-in. (15 mm)	Not Available	0.249 (6.325)
1-in. (25 mm)	Not Available	0.420 (10.668)
1 1/2-in. (40 mm)	Not Available	0.644 (16.358)
2-in. (50 mm)	0.413 (10.490)	0.827 (21.006)
3-in. (80 mm)	0.614 (15.596)	1.227 (31.166)

Table A-20. β = 0.4 (Measurement in inches [mm])(1)

Line size	405C	405P
4-in. (100 mm)	0.805 (20.447)	1.610 (40.894)
6-in. (150 mm)	1.213 (30.810)	2.426 (61.620)
8-in. (200 mm)	1.596 (40.538)	3.192 (81.077)
10-in. (250 mm)	2.004 (50.902)	4.008 (101.80)
12-in. (300 mm)	2.400 (60.960)	4.800 (121.92)

(1) Tolerance = ±0.002-in.

Table A-21. β = 0.65 (Measurement in inches [mm])(1)

Line size	405C	405P
1/2-in. (15 mm)	Not Available	0.404 (10.262)
1-in. (25 mm)	Not Available	0.682 (17.323)
1 1/2-in. (40 mm)	Not Available	1.047 (26.594)
2-in. (50 mm)	0.620 (15.748)(2)	1.344 (34.138)
3-in. (80 mm)	0.997 (25.324)	1.994 (50.648)
4-in. (100 mm)	1.308 (33.223)	2.617 (66.472)
6-in. (150 mm)	1.971 (50.063)	3.942 (100.127)
8-in. (200 mm)	2.594 (65.888)	5.188 (131.775)
10-in. (250 mm)	3.257 (82.728)	6.513 (165.43)
12-in. (300 mm)	3.900 (99.060)	7.800 (198.120)

(1) Tolerance = ±0.002-in.
(2) For 2-in. (50 mm) line size, the Beta (β) = 0.60.

Table A-22. β = 0.50 (Measurement in inches [mm])(1)

Line size	405C	405P
1/2-in. (15 mm)	Not Available	0.311 (7.899)
1-in. (25 mm)	Not Available	0.525 (13.335)
1 1/2-in. (40 mm)	Not Available	0.805 (20.447)
2-in. (50 mm)	0.517 (13.125)	1.034 (26.264)
3-in. (80 mm)	0.767 (19.481)	1.534 (38.963)
4-in. (100 mm)	1.007 (25.565)	2.013 (51.130)
6-in. (150 mm)	1.516 (38.512)	3.033 (77.038)
8-in. (200 mm)	1.995 (50.679)	3.991 (101.371)
10-in. (250 mm)	2.505 (63.627)	5.010 (127.254)
12-in. (300 mm)	3.000 (76.200)	6.000 (152.400)

(1) Tolerance = ±0.002-in.

Table A-23. 405 P or C Weight (Measurement in lb. [kg])

Line size	Direct mount (D3)	Remote mount (R3)
1/2-in. (15 mm)	3.50 (1.73)	7.5 (3.70)
1-in. (25 mm)	4.25 (2.10)	8.25 (4.07)
1 1/2-in. (40 mm)	4.75 (2.34)	8.75 (4.32)
2-in. (50 mm)	5.00 (2.47)	9.00 (4.44)
3-in. (80 mm)	7.00 (3.45)	11.00 (5.43)
4-in. (100 mm)	9.50 (4.69)	13.50 (6.67)
6-in. (150 mm)	13.00 (6.41)	17.00 (8.40)
8-in. (200 mm)	18.25 (9.00)	22.25 (10.99)
10-in. (250 mm)	23.50 (11.59)	27.50 (13.58)
12-in. (300 mm)	29.50 (14.55)	33.50 (16.54)

Table A-24. 405A Weight (Measurement in lb. [kg])

Line size	Direct mount (D3)	Remote mount (R3)
2-in. (50 mm)	5.59 (2.53)	7.26 (3.29)
3-in. (80 mm)	7.41 (3.36)	9.08 (4.12)
4-in. (100 mm)	9.18 (4.16)	10.85 (4.92)
6-in. (150 mm)	13.10 (5.94)	14.76 (6.70)
8-in. (200 mm)	17.12 (7.77)	18.78 (8.52)

A.2.4 Installation consideration

Straight pipe requirement

Use the appropriate lengths of straight pipe upstream and downstream of the 405 to minimize the effects of moderate flow disturbances in the pipe. Table A-25 and Table A-26 lists recommended lengths of straight pipe per ISO 5167.

Table A-25. 405C Straight Pipe Requirements(1)

	Beta	0.40	0.50	0.65
Upstream (inlet) side of primary	Reducer	2	2	2
	Single 90° bend or tee	2	2	2
	Two or more 90° bends in the same plane	2	2	2
	Two or more 90° bends in different plane	2	2	2
	Up to 10° of swirl	2	2	2
	Butterfly valve (75% to 100% open)	2	5	5
Downstream (outlet) side of primary		2	2	2

Table A-26. 405P Straight Pipe Requirements(1)(2)(3)

	Beta	0.40	0.50	0.65
Upstream (inlet) side of	Reducer	5	8	12
	Single 90° bend or tee	16	22	44
	Two or more 90° bends in the same plane	10	18	44
	Two or more 90° bends in different plane	50	75	60
	Expander	12	20	28
	Ball / Gate valve fully open	12	12	18
Downstream (outlet) side of primary		6	6	7

(1) Consult an Emerson Process Management representative if disturbance is not listed.
(2) Recommended lengths represented in pipe diameters per ISO 5167.
(3) Refer to ISO 5167 for recommended lengths when using flow straighteners.

Pipe orientation

Orientation/ flow direction	Process[1]		
	Gas	Liquid	Steam
Horizontal	D/R	D/R	D/R
Vertical Up	R	D/R	R
Vertical Down	D/R	NR	NR

(1) D = Direct mount acceptable (recommended)
R = Remote mount acceptable
NR = Not recommended

Pipe centering

Improper centering of any orifice type device can cause an error of up to ±5% in small line sizes. A centering mechanism (centering ring) independent of flange rating comes standard with the 405 Compact Orifice Series. The centering ring can be rotated around the wafer to facilitate centering depending on the orientation of the flowmeter.

Figure A-2. 405C Conditioning Orifice

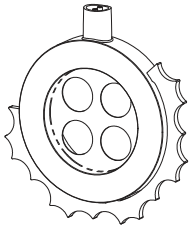

A.3 Dimensional drawings

A.3.1 Rosemount 3051SFC Compact Flowmeter

Figure A-3. Rosemount 3051SFC Compact Flowmeter

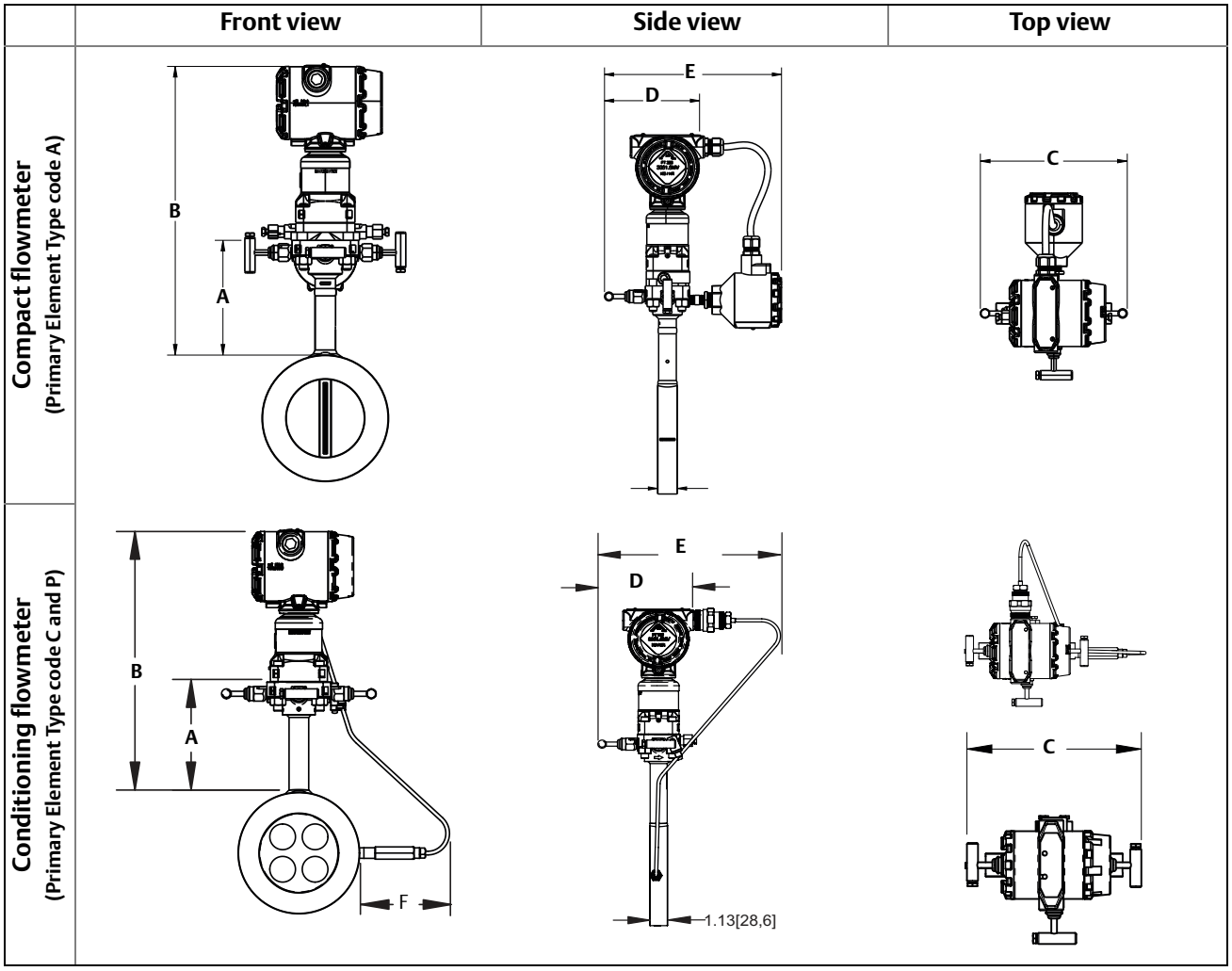

Table A-27. 3051SFC Compact Dimensional Data(1)

Primary element type	A	B	Transmitter height	C	D	E	F
Type A	5.62 (143)	Transmitter Height + A	8.53 (217)	7.75 (197) - closed 8.25 (210) - open	6.00 (152) - closed 6.25 (159) - open	10.0 (254)- closed 10.25 (260.3)-open	N/A
Type P and C	5.62 (143)	Transmitter Height + A	7.70 (196)	7.75 (197) - closed 8.25 (210) - open	6.00 (152) - closed 6.25 (159) - open	10.2 (257.8) - closed 10.4 (264.2) - open	Max of 6.7 (71)

(1) Measurement in inches (millimeters).

A.3.2 Rosemount 3051CFC Compact Flowmeter

Figure A-4. Rosemount 3051CFC Compact Flowmeter

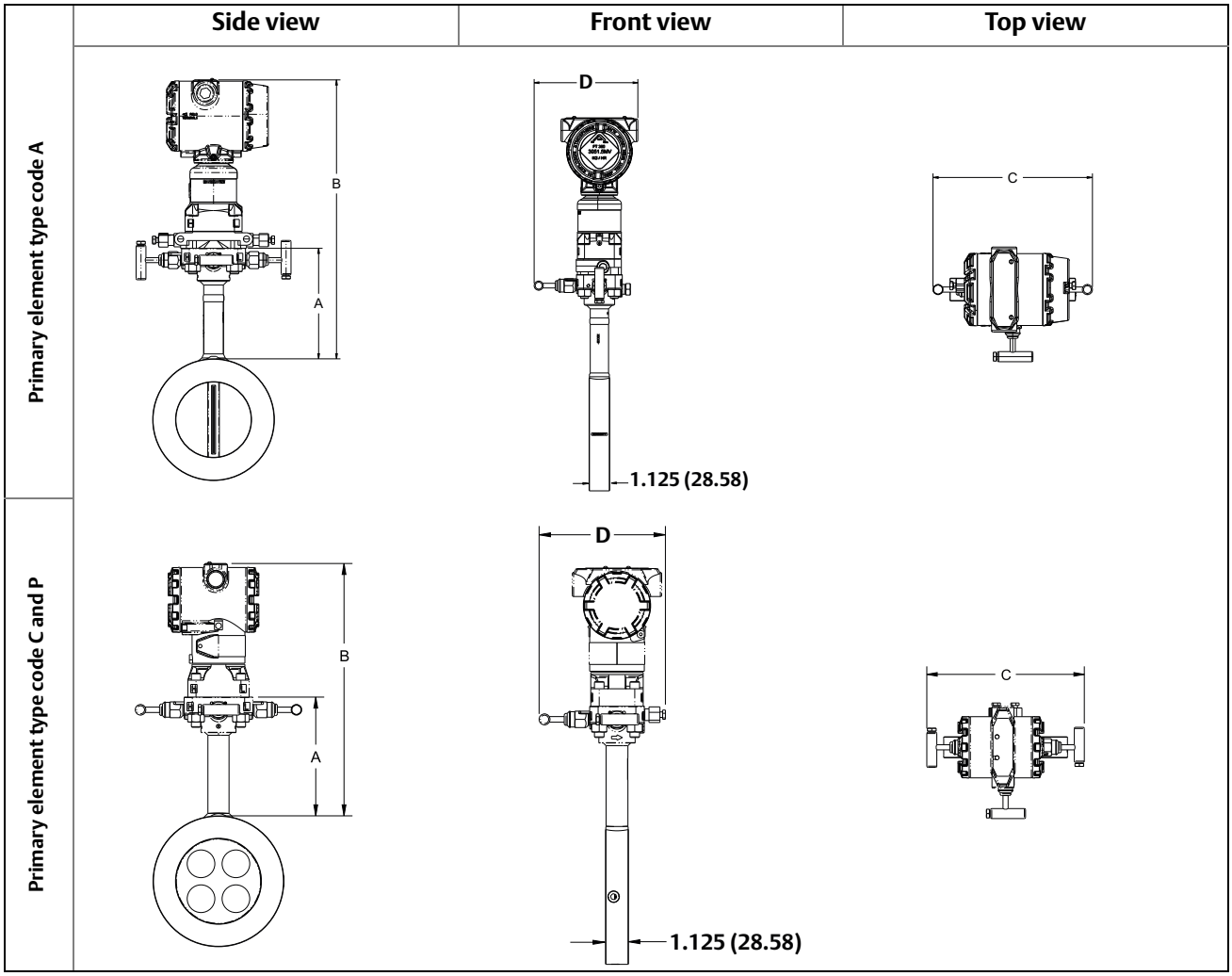

Table A-28. 3051CFC Compact Dimensional Data

Primary element type	A	B	Transmitter height	C	D
A	5.62 (143)	Transmitter Height + A	7.38 (188)	7.75 (197) - closed 8.25 (210) - open	6.00 (152) - closed 6.25 (159) - open
P and C	5.62 (143)	Transmitter Height + A	6.55 (166)	7.75 (197) - closed 8.25 (210) - open	6.00 (152) - closed 6.25 (159) - open

Dimensions are in inches (millimeters).

A.3.3 Rosemount 2051CFC Compact Flowmeter

Figure A-5. Rosemount 2051CFC Compact Flowmeter

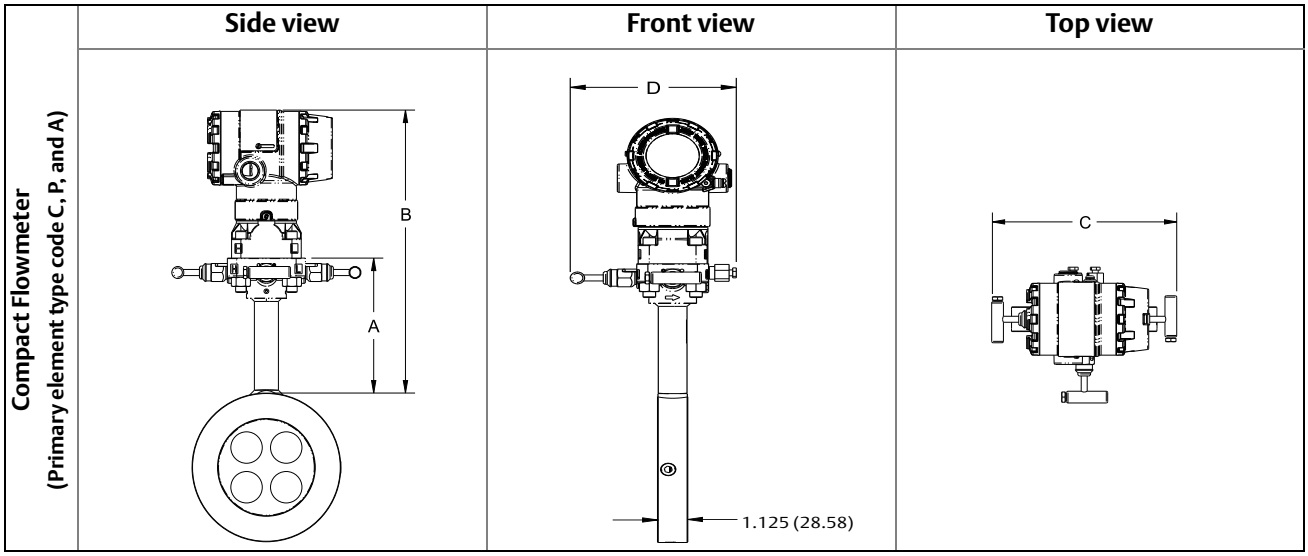

Table A-29. 2051CFC Compact Dimensional Data(1)

Primary element type	A	B	Transmitter height	C	D
A	5.62 (143)	Transmitter Height + A	7.03 (179)	7.75 (197) - closed 8.25 (210) - open	6.00 (152) - closed 6.25 (159) - open
P and C	5.62 (143)	Transmitter Height + A	6.20 (157)	7.75 (197) - closed 8.25 (210) - open	6.00 (152) - closed 6.25 (159) - open

(1) Measurement in inches (millimeters).

A.3.4 Rosemount 405 Compact Orifice Primary Element

Figure A-6. Rosemount 405 Compact Orifice Plate (Direct Mount)

	Front view (transmitter connection A3)	Front view (transmitter connection D3)
Compact orifice plate (Primary Element Type code P)	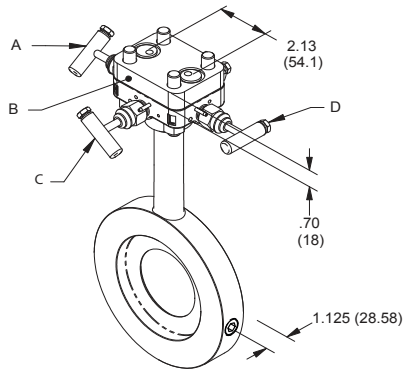	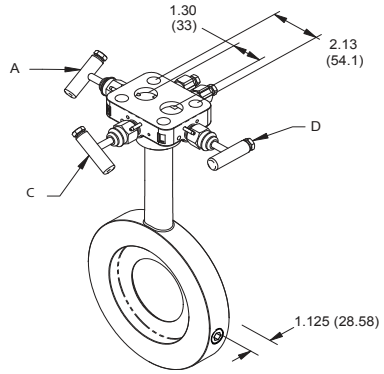
Conditioning orifice plate (Primary Element Type code C)	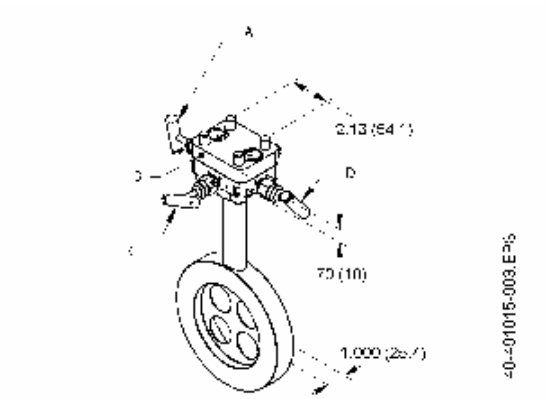	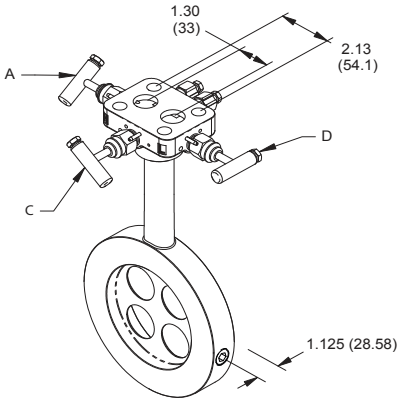
Compact Annubar primary element (Primary Element Type Code A)	Transmitter Connection A3 not available with Primary Element Technology A	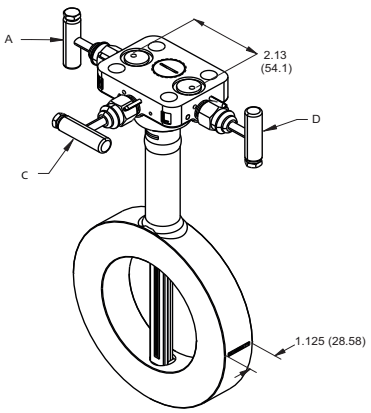
	A. High instrument valve B. Adapter plate	C. Equalizer valve D. Low instrument valve

Note
Transmitter connection code A3 is to be used with a traditional style transmitter. This is a stainless steel adapter plate for allowing the direct mount of traditional style transmitters.

Figure A-7. Rosemount 405 Compact Orifice Plate (Remote Mount Transmitter)

	Adapter plate (R3)	Flange adapter (R3 with option E)
Compact orifice plate (Primary Element Type code P)	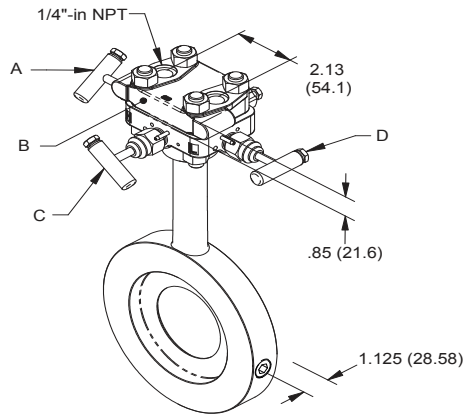	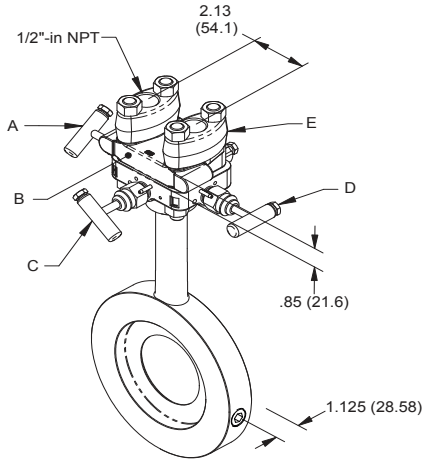
Conditioning orifice plate (Primary Element Type code C)	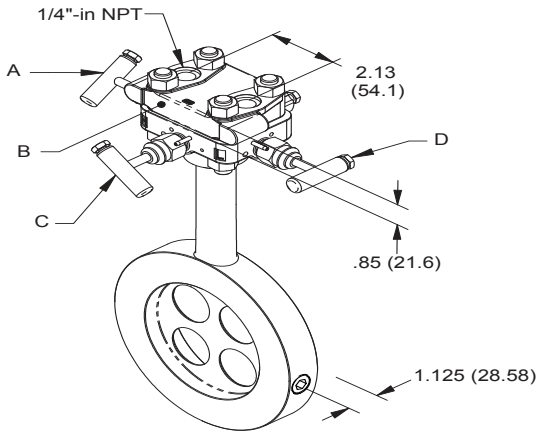	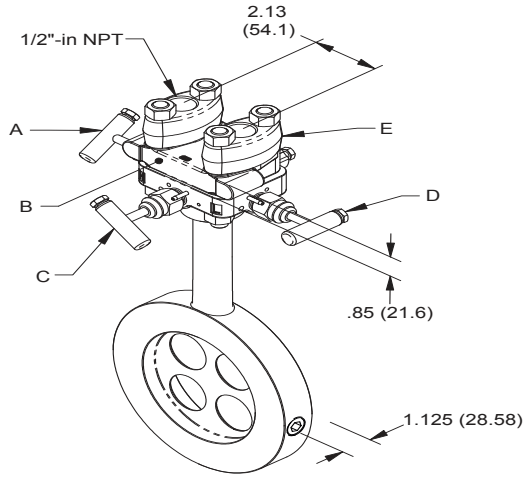
Compact Annubar primary element (Primary Element Type Code A)	Transmitter Connection A3 not available with Primary Element Technology A	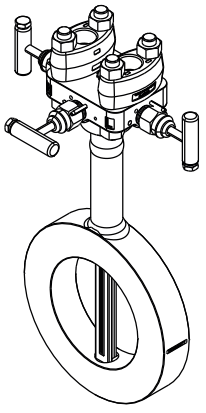

A. High instrument valve
B. Adapter plate
C. Equalizer valve
D. Low instrument valve
E. Flange adapter

A.4 Spare parts

Table A-30. Mounting Stud and Nut Kits

Part number	Part description
08951-0100-0101	1/2-in. 150# Mounting Kit
08951-0100-0102	1-in. 150# Mounting Kit
08951-0100-0103	1 1/2-in. 150# Mounting Kit
08951-0100-0104	2-in. 150# Mounting Kit
08951-0100-0105	3-in. 150# Mounting Kit
08951-0100-0106	4-in. 150# Mounting Kit
08951-0100-0107	6-in. 150# Mounting Kit
08951-0100-0108	8-in. 150# Mounting Kit
08951-0100-0109	10-in. 150# Mounting Kit
08951-0100-0110	12-in. 150# Mounting Kit
08951-0100-0201	1/2-in. 300# Mounting Kit
08951-0100-0202	1-in. 300# Mounting Kit
08951-0100-0203	1 1/2-in. 300# Mounting Kit
08951-0100-0204	2-in. 300# Mounting Kit
08951-0100-0205	3-in. 300# Mounting Kit
08951-0100-0206	4-in. 300# Mounting Kit
08951-0100-0207	6-in. 300# Mounting Kit
08951-0100-0208	8-in. 300# Mounting Kit
08951-0100-0209	10-in. 300# Mounting Kit
08951-0100-0210	12-in. 300# Mounting Kit
08951-0100-0301	1/2-in. 600# Mounting Kit
08951-0100-0302	1-in. 600# Mounting Kit
08951-0100-0303	1 1/2-in. 600# Mounting Kit
08951-0100-0304	2-in. 600# Mounting Kit
08951-0100-0305	3-in. 600# Mounting Kit
08951-0100-0306	4-in. 600# Mounting Kit
08951-0100-0307	6-in. 600# Mounting Kit
08951-0100-0308	8-in. 600# Mounting Kit
08951-0100-0309	10-in. 600# Mounting Kit
08951-0100-0310	12-in. 600# Mounting Kit

Table A-31. Gasket Kits

Part number	Part description
08951-0200-0101	1/2-in. 150# Gasket Kit
08951-0200-0102	1-in. 150# Gasket Kit
08951-0200-0103	1 1/2-in. 150# Gasket Kit
08951-0200-0104	2-in. 150# Gasket Kit
08951-0200-0105	3-in. 150# Gasket Kit
08951-0200-0106	4-in. 150# Gasket Kit
08951-0200-0107	6-in. 150# Gasket Kit
08951-0200-0108	8-in. 150# Gasket Kit
08951-0200-0109	10-in. 150# Gasket Kit
08951-0200-0110	12-in. 150# Gasket Kit
08951-0200-0201	1/2-in. 150# Gasket Kit
08951-0200-0202	1-in. 150# Gasket Kit
08951-0200-0203	1 1/2-in. 150# Gasket Kit
08951-0200-0204	2-in. 150# Gasket Kit
08951-0200-0205	3-in. 150# Gasket Kit
08951-0200-0206	4-in. 150# Gasket Kit
08951-0200-0207	6-in. 150# Gasket Kit
08951-0200-0208	8-in. 150# Gasket Kit
08951-0200-0209	10-in. 300# Gasket Kit
08951-0200-0210	12-in. 300# Gasket Kit
08951-0200-0301	1/2-in. 150# Gasket Kit
08951-0200-0302	1-in. 150# Gasket Kit
08951-0200-0303	1 1/2-in. 150# Gasket Kit
08951-0200-0304	2-in. 150# Gasket Kit
08951-0200-0305	3-in. 150# Gasket Kit
08951-0200-0306	4-in. 150# Gasket Kit
08951-0200-0307	6-in. 150# Gasket Kit
08951-0200-0308	8-in. 150# Gasket Kit
08951-0200-0309	10-in. 600# Gasket Kit
08951-0200-0310	12-in. 600# Gasket Kit

Table A-32. Remote Mount Retrofit Kits

Part number	Part description
08951-0300-0001	Remote Retrofit Kit, 1/4“ NPT, 405C/P
08951-0300-0002	Remote Retrofit Kit, 1/2“ NPT, 405C/P
08951-0300-0003	Remote Retrofit Kit, 1/2“ NPT, 405A

Table A-33. Miscellaneous

Part number	Part description
08951-0400-0001	Drain / Vent Replacement Kit
08951-0401-0001	Valve Bonnet, SST
08951-0402-0001	Spare 1/2-in. Alignment Ring
08951-0402-0002	Spare 1-in. Alignment Ring
08951-0402-0003	Spare 1 1/2-in. Alignment Ring
08951-0402-0004	Spare 2-in. Alignment Ring
08951-0402-0005	Spare 3-in. Alignment Ring
08951-0402-0006	Spare 4-in. Alignment Ring
08951-0402-0007	Spare 6-in. Alignment Ring
08951-0402-0008	Spare 8-in. Alignment Ring
08951-0402-0030	Spare 10-in. Alignment Ring 150# / 300#
08951-0402-0031	Spare 10-in. Alignment Ring 600#
08951-0402-0032	Spare 10-in. Alignment Ring DN250 PN16
08951-0402-0033	Spare 10-in. Alignment Ring DN250 PN40
08951-0402-0034	Spare 10-in. Alignment Ring DN250 PN100
08951-0402-0035	Spare 10-in. Alignment Ring JIS DN250 (10K/20K/40K)
08951-0402-0036	Spare 10-in. Alignment Ring JIS DN250 (20K)
08951-0402-0037	Spare 10-in. Alignment Ring JIS DN250 (40K)
08951-0402-0038	Spare 12-in. Alignment Ring 150# / 300#
08951-0402-0039	Spare 12-in. Alignment Ring 600#
08951-0402-0009	Spare 1/2-in. Alignment Ring DN 15 (PN16/PN40/PN100)
08951-0402-0010	Spare 1-in. Alignment Ring DN 25 (PN16/PN40/PN100)
08951-0402-0011	Spare 1 1/2-in. Alignment Ring DN 40 (PN16/PN40/PN100)
08951-0402-0012	Spare 2-in. Alignment Ring DN 50 (PN16/PN40/PN100)
08951-0402-0013	Spare 3-in. Alignment Ring DN 80 (PN16/PN40/PN100)
08951-0402-0014	Spare 4-in. Alignment Ring DN 100 (PN16/PN40/PN100)
08951-0402-0015	Spare 6-in. Alignment Ring DN 150 (PN16)
08951-0402-0016	Spare 6-in. Alignment Ring DN 150 (PN16/PN40/PN100)
08951-0402-0017	Spare 8-in. Alignment Ring DN 200 (PN16)
08951-0402-0018	Spare 8-in. Alignment Ring DN 200 (PN16/PN40/PN100)
08951-0402-0019	Spare 1/2-in. Alignment Ring JIS DN15 (10K/20K/40K)
08951-0402-0020	Spare 1-in. Alignment Ring JIS DN25 (10K/20K/40K)
08951-0402-0021	Spare 1 1/2-in. Alignment Ring JIS DN40 (10K/20K/40K)
08951-0402-0022	Spare 2-in. Alignment Ring JIS DN50 (10K/20K/40K)
08951-0402-0023	Spare 3-in. Alignment Ring JIS DN80 (10K)

Table A-33. Miscellaneous

Part number	Part description
08951-0402-0024	Spare 3-in. Alignment Ring JIS DN80 (20K/40K)
08951-0402-0025	Spare 4-in. Alignment Ring JIS DN100 (10K/20K)
08951-0402-0026	Spare 4-in. Alignment Ring JIS DN100 (40K)
08951-0402-0027	Spare 6-in. Alignment Ring JIS DN150 (10K)
08951-0402-0028	Spare 6-in. Alignment Ring JIS DN150 (20K/40K)
08951-0402-0029	Spare 8-in. Alignment Ring JIS DN200 (10K/20K/40K)
08951-0402-0040	Spare 12-in. Alignment Ring DN300 PN16
08951-0402-0041	Spare 12-in. Alignment Ring DN300 PN40
08951-0402-0042	Spare 12-in. Alignment Ring DN300 PN100
08951-0402-0043	Spare 12-in. Alignment Ring JIS DN300 (10K)
08951-0402-0044	Spare 12-in. Alignment Ring JIS DN300 (20K/40K)
08951-0402-0045	Spare 12-in. Alignment Ring JIS DN300 (40K)

Table A-34. Part Description - 3051SFC Flowmeter Spare RTD

Part number	Part description
08951-0500-1005	RTD Cable Assembly (25") for 3051SFC line size 005
08951-0500-1010	RTD Cable Assembly (25") for 3051SFC line size 010
08951-0500-1015	RTD Cable Assembly (25") for 3051SFC line size 015
08951-0500-1020	RTD Cable Assembly (28") for 3051SFC line size 020
08951-0500-1030	RTD Cable Assembly (28") for 3051SFC line size 030
08951-0500-1040	RTD Cable Assembly (28") for 3051SFC line size 040
08951-0500-1060	RTD Cable Assembly (33.5") for 3051SFC line size 060
08951-0500-1080	RTD Cable Assembly (33.5") for 3051SFC line size 080
08951-0500-1100	RTD Cable Assembly (36.5") for 3051SFC line size 100
08951-0500-1120	RTD Cable Assembly (36.5") for 3051SFC line size 120
08951-0500-0005	RTD Cable Assembly (25") for 3051SFC M20-G$^1/_2$, line size 005
08951-0500-0010	RTD Cable Assembly (25") for 3051SFC M20-G$^1/_2$, line size 010
08951-0500-0015	RTD Cable Assembly (25") for 3051SFC M20-G$^1/_2$, line size 015
08951-0500-0020	RTD Cable Assembly (28") for 3051SFC M20-G$^1/_2$, line size 020
08951-0500-0030	RTD Cable Assembly (28") for 3051SFC M20-G$^1/_2$, line size 030
08951-0500-0040	RTD Cable Assembly (28") for 3051SFC M20-G$^1/_2$, line size 040
08951-0500-0060	RTD Cable Assembly (33.5") for 3051SFC M20-G$^1/_2$, line size 060
08951-0500-0080	RTD Cable Assembly (33.5") for 3051SFC M20-G$^1/_2$, line size 080
08951-0500-0100	RTD Cable Assembly (36.5") for 3051SFC M20-G$^1/_2$, line size 100
08951-0500-0120	RTD Cable Assembly (36.5") for 3051SFC M20-G$^1/_2$, line size 120

Appendix B Product Certifications

B.1 Rosemount 3051S / 3051 / 2051

Note
See the Rosemount Pressure Transmitter Reference manuals for additional information. Rosemount 3051S MultiVariable Reference Manual is document number 00809-0100-4803. Rosemount 3051 Pressure Transmitter Reference Manual is document number 00809-0100-4001. Rosemount 2051 Pressure Transmitter Reference Manual is document number 00809-0100-4101.

Rosemount World Headquarters
Emerson Process Management
6021 Innovation Blvd
Shakopee, MN 55379, USA
+1 800 999 9307 or +1 952 906 8888
+1 952 949 7001
RFQ.RMD-RCC@EmersonProcess.com

North America Regional Office
Emerson Process Management
8200 Market Blvd.
Chanhassen, MN 55317, USA
+1 800 999 9307 or +1 952 906 8888
+1 952 949 7001
RMT-NA.RCCRFQ@Emerson.com

Latin America Regional Office
Emerson Process Management
1300 Concord Terrace, Suite 400
Sunrise, Florida, 33323, USA
+1 954 846 5030
+1 954 846 5121
RFQ.RMD-RCC@EmersonProcess.com

Europe Regional Office
Emerson Process Management Europe GmbH
Neuhofstrasse 19a P.O. Box 1046
CH 6340 Baar
Switzerland
+41 (0) 41 768 6111
+41 (0) 41 768 6300
RFQ.RMD-RCC@EmersonProcess.com

Asia Pacific Regional Office
Emerson Process Management Asia Pacific Pte Ltd
1 Pandan Crescent
Singapore 128461
+65 6777 8211
+65 6777 0947
Enquiries@AP.EmersonProcess.com

Middle East and Africa Regional Office
Emerson Process Management
Emerson FZE P.O. Box 17033,
Jebel Ali Free Zone - South 2
Dubai, United Arab Emirates
+971 4 8118100
+971 4 8865465
RFQ.RMTMEA@Emerson.com

Standard Terms and Conditions of Sale can be found at www.rosemount.com/terms_of_sale.
AMS, and the Emerson logo are registered trademarks and/or service marks of Emerson Electric Co.
DeltaV and SNAP-ON are trademarks of Emerson Electrical Co.
Rosemount and the Rosemount logotype are registered trademarks of Rosemount Inc.
FOUNDATION fieldbus is a trademark of the Fieldbus Foundation.
*Wireless*HART and HART are registered trademarks of the HART Communication Foundation.
Microsoft is a registered trademark of Microsoft Corporation in the United States and other countries.
Modbus is a registered trademark of Modicon, Inc.
Mozilla Firefox is a registered trademark of The Mozilla Foundation.
EtherNet/IP is a trademark of ControlNet International under license by ODVA.
Intel is a trademark of Intel Corporation in the U.S. and/or other countries.
Windows is a trademark of Microsoft Corporation in the United States and other countries.

All other marks are the property of their respective owners.

© 2015 Rosemount, Inc. All rights reserved.

ROSEMOUNT

EMERSON.
Process Management