**Reference manual**
00809-0100-4445, Rev AB
June 2024

# Rosemount™ 8712EM Transmitter with HART Protocol Reference Manual




ROSEMOUNT™

EMERSON™

# Contents

**Chapter 1** **Hazard messages ..... 7**
1.1 Safety messages ..... 8

**Chapter 2** **Introduction ..... 11**
2.1 System description ..... 11
2.2 Product recycling/disposal ..... 12

**Chapter 3** **Sensor Installation ..... 13**
3.1 Handling and Lifting Safety ..... 13
3.2 Location and Position ..... 14
3.3 Sensor Installation ..... 17
3.4 Process reference connection ..... 26

**Chapter 4** **Remote Transmitter Installation ..... 31**
4.1 Pre-installation ..... 31
4.2 Transmitter symbols ..... 33
4.3 Mounting ..... 34
4.4 Wiring ..... 35

**Chapter 5** **Basic Configuration ..... 51**
5.1 Basic Setup ..... 51
5.2 Local operator interface (LOI) ..... 51
5.3 Other configuration tools ..... 52
5.4 Measurement units ..... 52

**Chapter 6** **Advanced installation details ..... 55**
6.1 Hardware switches ..... 55
6.2 Pulse output and discrete input/outputs ..... 57
6.3 Coil housing configuration ..... 65

**Chapter 7** **Operation ..... 71**
7.1 Introduction ..... 71
7.2 Local operator interface (LOI) ..... 71
7.3 Field Communicator interface ..... 78

**Chapter 8** **Advanced Configuration Functionality ..... 85**
8.1 Introduction ..... 85
8.2 Configure outputs ..... 85
8.3 Configure HART ..... 97
8.4 Configure LOI/Display ..... 100
8.5 Additional parameters ..... 101
8.6 Configure special units ..... 103

**Chapter 9** **Advanced Diagnostics Configuration ..... 105**
9.1 Introduction ..... 105
9.2 Licensing and enabling ..... 105
9.3 Tunable empty pipe detection ..... 106

9.4 Electronics temperature....107
9.5 Ground/wiring fault detection....108
9.6 High process noise detection....109
9.7 Coated electrode detection....110
9.8 4-20 mA loop verification....111
9.9 Smart Meter Verification....112
9.10 Run commanded Smart Meter Verification....115
9.11 Continuous Smart Meter Verification....116
9.12 Smart Meter Verification test results....117
9.13 Smart Meter Verification measurements....118
9.14 Optimizing the Smart Meter Verification....120

**Chapter 10 Digital Signal Processing....123**
10.1 Introduction....123
10.2 Process noise profiles....123
10.3 High process noise diagnostic....123
10.4 Optimizing flow reading in noisy applications....124
10.5 Explanation of signal processing algorithm....126

**Chapter 11 Maintenance....129**
11.1 Introduction....129
11.2 Safety information....129
11.3 Installing a LOI/Display....130
11.4 Replacing electronics stack....131
11.5 Replacing a terminal block socket module....132
11.6 Replacing a terminal block with amp clips....133
11.7 Trims....135

**Chapter 12 Troubleshooting....139**
12.1 Introduction....139
12.2 Safety information....139
12.3 Installation check and guide....139
12.4 Diagnostic messages....142
12.5 Basic troubleshooting....150
12.6 Sensor troubleshooting....155
12.7 Installed sensor tests....157
12.8 Uninstalled sensor tests....159
12.9 Technical support and service....161
12.10 Service....161

**Appendix A Product specifications....163**
A.1 Rosemount 8700M Flowmeter Platform specifications....163
A.2 Transmitter specifications....167
A.3 8705-M Flanged Sensor Specifications....176
A.4 8711-M/L Wafer Sensor Specifications....181
A.5 8721 Hygienic (Sanitary) Sensor Specifications....183

**Appendix B Product certifications....187**

**Appendix C Wiring Diagrams....189**

C.1 Wiring sensor to transmitter ..... 189
C.2 775 Smart Wireless THUM™ Adapter wiring diagrams ..... 191
C.3 Field Communicator wiring diagrams ..... 193

**Appendix D Implementing a Universal Transmitter ..... 195**
D.1 Safety messages ..... 195
D.2 Universal capability ..... 195
D.3 Three step process ..... 195
D.4 Wiring the universal transmitter ..... 196
D.5 Rosemount sensors ..... 196
D.6 Brooks sensors ..... 200
D.7 Endress and Hauser sensors ..... 202
D.8 Fischer and Porter sensors ..... 203
D.9 Foxboro sensors ..... 209
D.10 Kent Veriflux VTC sensor ..... 213
D.11 Kent sensors ..... 214
D.12 Krohne sensors ..... 215
D.13 Taylor sensors ..... 216
D.14 Yamatake Honeywell sensors ..... 218
D.15 Yokogawa sensors ..... 219
D.16 Generic manufacturer sensor to 8712 Transmitter ..... 220

# 1 Hazard messages

This document uses the following criteria for hazard messages based on ANSI standards Z535.6-2011 (R2017).

**⚠ DANGER**

Serious injury or death will occur if a hazardous situation is not avoided.

**⚠ WARNING**

Serious injury or death could occur if a hazardous situation is not avoided.

**⚠ CAUTION**

Minor or moderate injury will or could occur if a hazardous situation is not avoided.

**NOTICE**

Data loss, property damage, hardware damage, or software damage can occur if a situation is not avoided. There is no credible risk of physical injury.

### Physical access

**⚠ WARNING**

Unauthorized personnel can potentially cause significant damage and/or misconfiguration of end users' equipment. Protect against all intentional or unintentional unauthorized use.

Physical security is an important part of any security program and fundamental to protecting your system. Restrict physical access to protect users' assets. This is true for all systems used within the facility.

# 1.1 Safety messages

**⚠ WARNING**

**General hazards**

Failure to follow these instructions could result in death or serious injury.

Read this manual before working with the product. For personal and system safety, and for optimum product performance, make sure you thoroughly understand the contents before installing, using, or maintaining this product.

Installation and servicing instructions are for use by qualified personnel only. Do not perform any servicing other than that contained in the operating instructions, unless qualified.

Verify the installation is completed safely and is consistent with the operating environment.

Do not substitute factory components with non-factory components. Substitution of components may impair Intrinsic Safety.

Do not perform any services other than those contained in this manual.

Process leaks may result in death or serious injury.

Mishandling products exposed to a hazardous substance may result in death or serious injury.

The electrode compartment may contain line pressure; it must be depressurized before the cover is removed.

If the product being returned was exposed to a hazardous substance as defined by OSHA, a copy of the required Safety Data Sheet (SDS) for each hazardous substance identified must be included with the returned goods.

The products described in this document are NOT designed for nuclear-qualified applications. Using non-nuclear qualified products in applications that require nuclear-qualified hardware or products may cause inaccurate readings. For information on Emerson nuclear-qualified products, contact your local sales representative.

**⚠ WARNING**

**Explosion hazards**

Failure to follow these instructions could cause an explosion, resulting in death or serious injury.

If installed in explosive atmospheres (hazardous areas, classified areas, or an “Ex” environment), it must be assured that the device certification and installation techniques are suitable for that particular environment.

Do not remove transmitter covers in explosive atmospheres when the circuit is live. Both transmitter covers must be fully engaged to meet explosion-proof requirements.

Do not disconnect equipment when a flammable or combustible atmosphere is present.

Before connecting a HART-based communicator in an explosive atmosphere, make sure the instruments in the loop are installed in accordance with intrinsically safe or nonincendive field wiring practices.

Do not connect a Rosemount transmitter to a non-Rosemount sensor that is located in an explosive atmosphere. The transmitter has not been evaluated for use with other manufacturers' magnetic flowmeter sensors in hazardous (Ex or Classified) areas. Special care should be taken by the end-user and installer to ensure the transmitter meets the safety and performance requirements of the other manufacturer’s equipment.

Follow national, local, and plant standards to properly earth ground the transmitter and sensor. The earth ground must be separate from the process reference ground.

Flow meters ordered with non-standard paint options or non-metallic labels may be subject to electrostatic discharge. To avoid electrostatic charge build-up, do not rub the flow meter with a dry cloth or clean with solvents.

**⚠ WARNING**

**Electrical hazards**

Failure to follow these instructions could cause damaging and unsafe discharge of electricity, resulting in death or serious injury.

Follow national, local, and plant standards to properly earth ground the transmitter and sensor. The earth ground must be separate from the process reference ground.

Disconnect power before servicing circuits.

Allow ten minutes for charge to dissipate prior to removing electronics compartment cover. The electronics may store energy in this period immediately after power is removed.

Avoid contact with leads and terminals. High voltage that may be present on leads could cause electrical shock.

Flow meters ordered with non-standard paint options or non-metallic labels may be subject to electrostatic discharge. To avoid electrostatic charge build-up, do not rub the flow meter with a dry cloth or clean with solvents.

## NOTICE

**Damage hazards**

Failure to follow these instructions could result in damage or destruction of equipment.

The sensor liner is vulnerable to handling damage. Never place anything through the sensor for the purpose of lifting or gaining leverage. Liner damage may render the sensor inoperable.

Metallic or spiral-wound gaskets should not be used as they will damage the liner face of the sensor. If spiral wound or metallic gaskets are required for the application, lining protectors must be used. If frequent removal is anticipated, take precautions to protect the liner ends. Short spool pieces attached to the sensor ends are often used for protection.

Correct flange bolt tightening is crucial for proper sensor operation and life. All bolts must be tightened in the proper sequence to the stated torque specifications. Failure to observe these instructions could result in severe damage to the sensor lining and possible sensor replacement.

In cases where high voltage/high current are present near the meter installation, ensure proper protection methods are followed to prevent stray electricity from passing through the meter. Failure to adequately protect the meter could result in damage to the transmitter and lead to meter failure.

Completely remove all electrical connections from both sensor and transmitter prior to welding on the pipe. For maximum protection of the sensor, consider removing it from the pipeline.

Do not connect mains or line power to the magnetic flow tube sensor or to the transmitter coil excitation circuit.

# 2 Introduction

## 2.1 System description

The flowmeter consists of a sensor and a transmitter. The sensor is installed in-line with the process piping; the transmitter is remotely mounted away from the sensor.

**Figure 2-1: Wall mount transmitter**



There are three Rosemount flow sensors available.

**Figure 2-2: 8705 Flanged sensor**



**Figure 2-3: 8711 Wafer sensor**



**Figure 2-4: 8721 Hygienic sensor**



The flow sensor contains two magnetic coils located on opposite sides of the sensor. Two electrodes, located perpendicular to the coils and opposite each other, make contact with the liquid. The transmitter energizes the coils and creates a magnetic field. A conductive liquid moving through the magnetic field generates an induced voltage at the electrodes. This voltage is proportional to the flow velocity. The transmitter converts the voltage detected by the electrodes into a flow reading. A cross-sectional view is show in Figure 2-5.

**Figure 2-5: (8705) Sensor cross section**

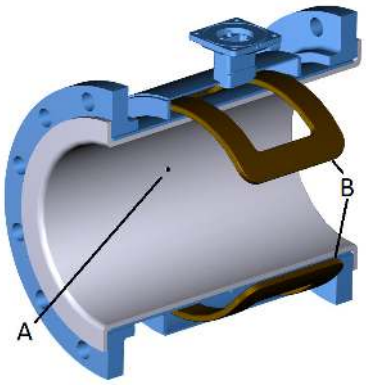


*A. Electrode*
*B. Coils*

## 2.2 Product recycling/disposal

Recycling of equipment and packaging should be taken into consideration and disposed of in accordance with local and national legislation/regulations.

# 3 Sensor Installation

This chapter provides instructions for handling and installing the flow sensor with a remotely mounted transmitter.

**Related information**

Remote Transmitter Installation

## 3.1 Handling and Lifting Safety

**⚠ CAUTION**

To reduce the risk of personal injury or damage to equipment, follow all lifting and handling instructions.

- Handle all parts carefully to prevent damage. Whenever possible, transport the system to the installation site in the original shipping container.
- PTFE-lined sensors are shipped with end covers that protect flange sealing surfaces from both mechanical damage and normal unrestrained distortion. Remove the end covers just before installation.
- Keep the shipping plugs in the conduit ports until you are ready to connect and seal them. Appropriate care should be taken to prevent water ingress.
- The sensor should be supported by the pipeline. Pipe supports are recommended on both the inlet and outlet sides of the sensor pipeline. There should be no additional support attached to the sensor.
- Use proper PPE (Personal Protection Equipment) including safety glasses and safety shoes.
- Do not lift the meter by holding the electronics housing or junction box.
- The sensor liner is vulnerable to handling damage. Never place anything through the sensor for the purpose of lifting or gaining leverage. Liner damage can render the sensor useless.
- Do not drop the device from any height.

### 3.1.1 Lifting lugs

**⚠ CAUTION**

If provided, use the lifting lugs on each flange to handle the flow meter when it is transported and lowered into place at the installation site. If lifting lugs are not provided, the flow meter must be supported with a lifting sling on each side of the housing.

- Standard pressure 3 inch through 36 inch flanged magnetic flow meters come with lifting lugs.
- High pressure (above 600#) 1 inch through 24 inch flanged magnetic flow meters come with lifting lugs.
- Wafers and sanitary magnetic flow meters do not come with lifting lugs.

**Figure 3-1: Example lifting without and with lifting lugs**

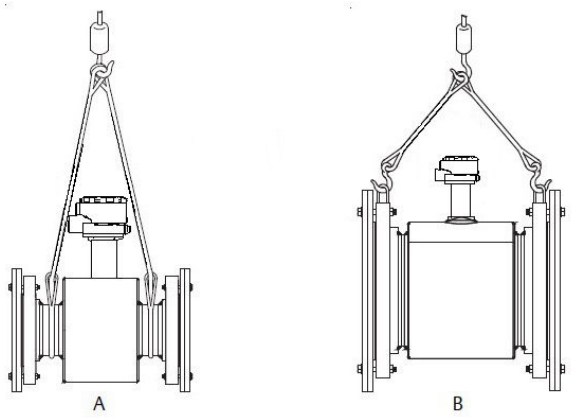


*A. Without lifting lugs*
*B. With lifting lugs*

## 3.2 Location and Position

### 3.2.1 Environmental considerations

To ensure maximum transmitter life, avoid extreme temperatures and excessive vibration. Typical problem areas include the following:

- High-vibration lines with integrally mounted transmitters
- Tropical/desert installations in direct sunlight
- Outdoor installations in arctic climates

### 3.2.2 Upstream and downstream piping

To ensure specified accuracy over widely varying process conditions, it is recommended to install the sensor with a minimum of five straight pipe diameters upstream and two pipe diameters downstream from the electrode plane.

**Figure 3-2: Upstream and downstream straight pipe diameters**

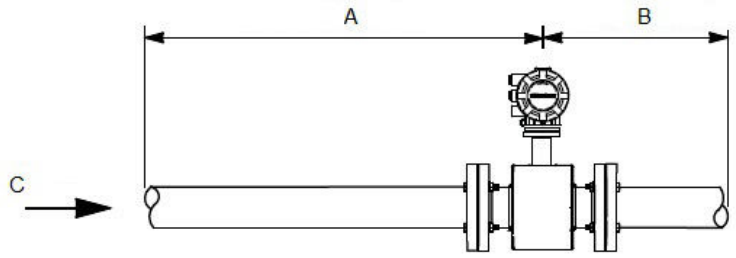


*A. Five pipe diameters (upstream)*
*B. Two pipe diameters (downstream)*
*C. Flow direction*

Installations with reduced upstream and downstream straight runs are possible. In reduced straight run installations, the meter may not meet accuracy specifications. Reported flow rates will still be highly repeatable.

## 3.2.3 Flow direction

The sensor should be mounted so that the arrow points in the direction of flow.

**Figure 3-3: Flow direction arrow**



## 3.2.4 Sensor piping location and orientation

The sensor should be installed in a location that ensures it remains full during operation. Depending on where it is installed, orientation must also be considered.

- Vertical installation with upward process fluid flow keeps the cross-sectional area full, regardless of flow rate.
- Horizontal installation should be restricted to low piping sections that are normally full.

**Figure 3-4: Sensor orientation**

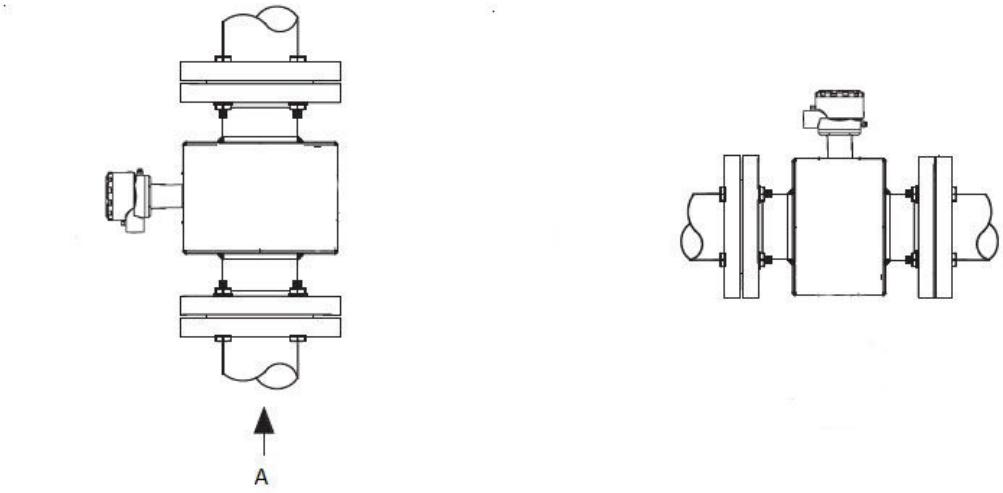


*A. Flow direction*

## 3.2.5 Transmitter or remote junction box rotation

To rotate housing, disconnect the interconnecting cables from the electronics board inside the transmitter housing prior to rotation.

## 3.2.6 Electrode orientation

The electrodes in the sensor are properly oriented when the two measurement electrodes are in the 3 and 9 o'clock positions or within 45 degrees from the horizontal, as shown on the left side of Figure 3-5. Avoid any mounting orientation that positions the top of the sensor at 90 degrees from the vertical position as shown on the right of Figure 3-5.

**Figure 3-5: Electrode orientation**

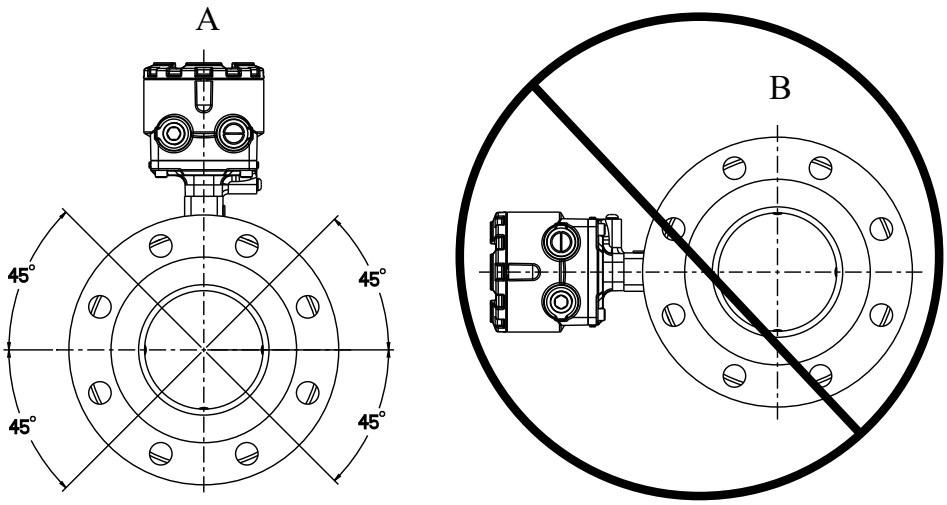


*A. Correct orientation*
*B. Incorrect orientation*

The sensor may require a specific orientation to comply with Hazardous Area T-code rating. Refer to the appropriate reference manual for any potential restrictions.

# 3.3 Sensor Installation

## 3.3.1 Flanged sensors

### Gaskets

- It is the responsibility of the customer to provide an appropriate gasket for their installation.
- The gasket material must be compatible with the process fluid and process conditions. See note below for more information regarding suitable gasket materials.
- If no ground rings or lining protectors are being used, a gasket is required at each process connection. See Figure 3-6.
- If using grounding ring(s), a gasket is required on each side of each grounding ring. See Figure 3-7.
- If using lining protectors, a gasket is required between each lining protector and each process connection. See Figure 3-8 and Figure 3-9.

**Note**

- Metallic or spiral wound gaskets should not be used in contact with the liner face. **They will damage the liner face**. If metallic or spiral wound gaskets are required for the application, then lining protectors must be used.
- Examples of non-metallic gasket materials that will not damage the liner face are rubber, fiber, or PTFE.
- Flat ring gasket types are suitable for raised-face (RF) flanges. Full-face gasket types are suitable for flat-face (FF) flanges. Full-face gaskets may be used with raised-face flanges.

**Figure 3-6: Flanged Gasket Placement with no Grounding Ring(s) or Lining Protector(s)**

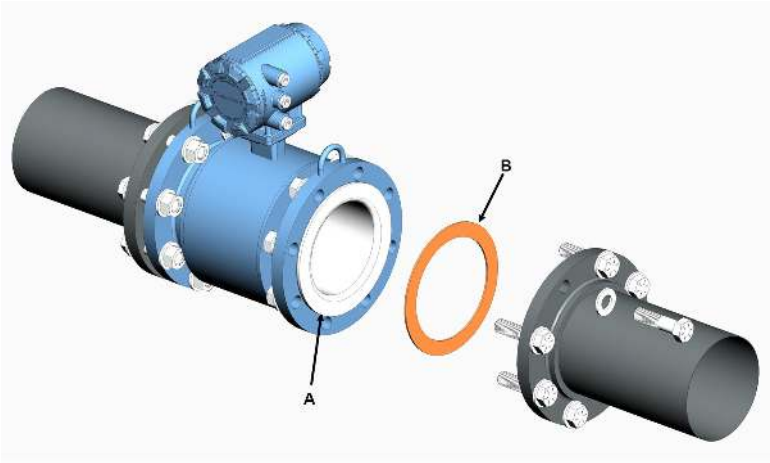


*A. Liner face*
*B. Customer supplied gasket (x2)*

**Figure 3-7: Flanged Gasket Placement with Grounding Ring(s)**

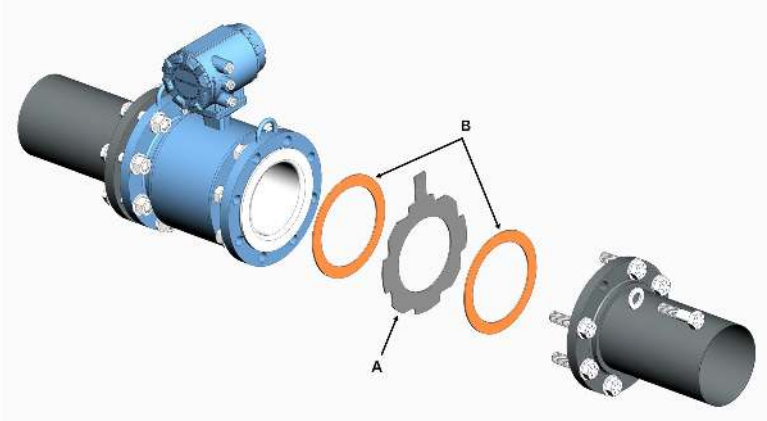


*A. Ground ring*
*B. Customer supplied gaskets (x2 per ground ring)*

**Figure 3-8: Flanged Gasket Placement with Stamped Lining Protector(s)**

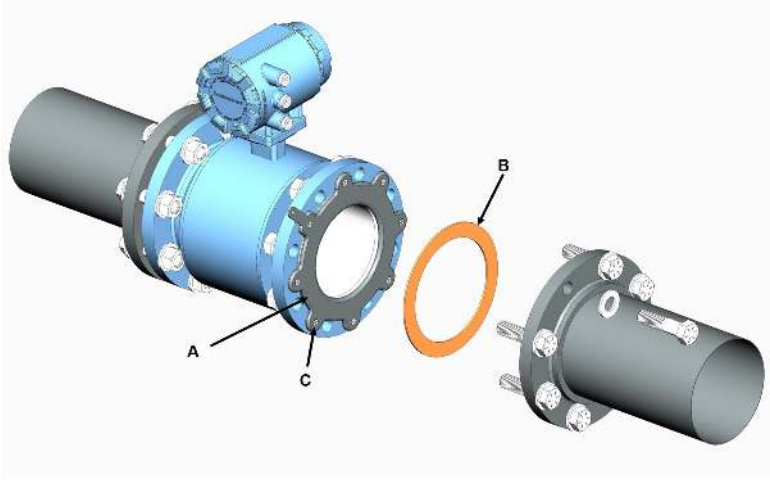


*A. Stamped lining protector*
*B. Customer supplied gasket (x1 per lining protector)*
*C. Lining protector fastening screws — DO NOT REMOVE the screws or the lining protector.*

**Figure 3-9: Flanged Gasket Placement with Machined Stamped Lining Protector(s)**

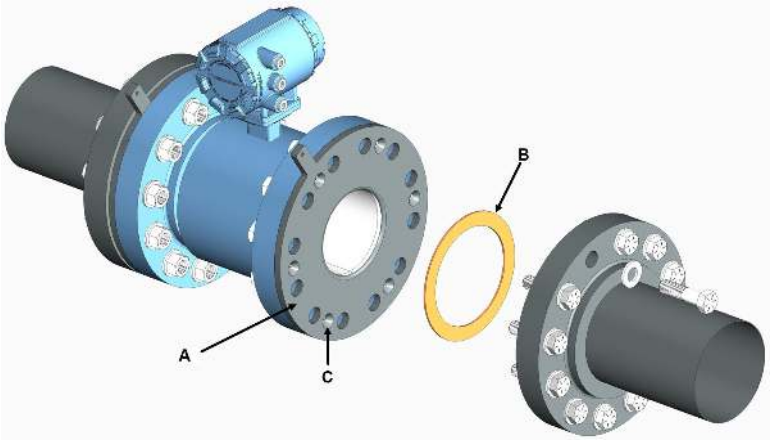


*A. Machined lining protector*
*B. Customer supplied gasket (x1 per lining protector)*
*C. Lining protector fastening screws — DO NOT REMOVE the screws or the lining protector.*

### Bolts

**Note**
Do not bolt one side at a time. Tighten both sides simultaneously. Example:

1. Snug upstream
2. Snug downstream
3. Tighten upstream (20%)
4. Tighten downstream (20%)

Do not snug and tighten the upstream side and then snug and tighten the downstream side. Failure to alternate between the upstream and downstream flanges when tightening bolts may result in liner damage.

Suggested torque values by sensor line size and liner type are listed in Table 3-2 for ASME B16.5 flanges and Table 3-3 or Table 3-4 for EN flanges. Consult the factory if the flange rating of the sensor is not listed. Tighten flange bolts on the upstream side of the sensor in the incremental sequence shown in Figure 3-10 to 20% of the suggested torque values. Repeat the process on the downstream side of the sensor. For sensors with greater or fewer flange bolts, tighten the bolts in a similar crosswise sequence. Repeat this entire tightening sequence at 40%, 60%, 80%, and 100% of the suggested torque values.

If leakage occurs at the suggested torque values, the bolts can be tightened in additional 10% increments until the joint stops leaking, or until the measured torque value reaches the maximum torque value of the bolts. Practical consideration for the integrity of the liner often leads to distinct torque values to stop leakage due to the unique combinations of flanges, bolts, gaskets, and sensor liner material.

Check for leaks at the flanges after tightening the bolts. Failure to use the correct tightening methods can result in severe damage. While under pressure, sensor materials may deform over time and require a second tightening 24 hours after the initial installation.

**Figure 3-10: Flange bolt torquing sequence**

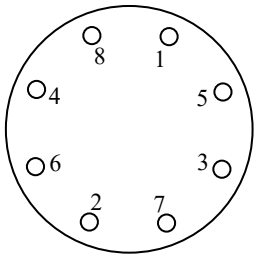


Prior to installation, identify the lining material of the flow sensor to ensure the suggested torque values are applied.

**Table 3-1: Lining material**

| Fluoropolymer liners | Other liners |
|---|---|
| T - PTFE | P - Polyurethane |
| F - ETFE | N - Neoprene |
| A - PFA | L - Linatex (Natural Rubber) |
| K - PFA+ | D - Adiprene |

### Table 3-2: Suggested flange bolt torque values for Rosemount 8705 (ASME) sensors

| Size code | Line size | Fluoropolymer liners | | Other liners | |
|---|---|---|---|---|---|
| | | Class 150 (pound-feet) | Class 300 (pound-feet) | Class 150 (pound-feet) | Class 300 (pound-feet) |
| 005 | 0.5 inch (15 mm) | 4 | 8 | N/A | N /A |
| 010 | 1 inch (25 mm) | 8 | 19 | 6 | 20 |
| 015 | 1.5 inch (40 mm) | 17 | 36 | 13 | 38 |
| 020 | 2 inch (50 mm) | 34 | 20 | 26 | 21 |
| 025 | 2.5 inch (65 mm) | 40 | 30 | 30 | 31 |
| 030 | 3 inch (80 mm) | 58 | 37 | 44 | 39 |
| 040 | 4 inch (100 mm) | 41 | 50 | 31 | 52 |
| 050 | 5 inch (125 mm) | 61 | 61 | 46 | 62 |
| 060 | 6 inch (150 mm) | 77 | 51 | 59 | 50 |
| 080 | 8 inch (200 mm) | 105 | 81 | 79 | 77 |
| 100 | 10 inch (250 mm) | 98 | 84 | 74 | 81 |
| 120 | 12 inch (300 mm) | 131 | 126 | 99 | 110 |
| 140 | 14 inch (350 mm) | 162 | 110 | 123 | 98 |
| 160 | 16 inch (400 mm) | 154 | 154 | 117 | 123 |
| 180 | 18 inch (450 mm) | 236 | 175 | 179 | 133 |
| 200 | 20 inch (500 mm) | 207 | 191 | 157 | 145 |
| 240 | 24 inch (600 mm) | 293 | 293 | 222 | 222 |
| 300 | 30 inch (750 mm) | 309 | 432 | 234 | 328 |
| 360 | 36 inch (900 mm) | 442 | 589 | 335 | 447 |

### Table 3-3: Suggested flange bolt torque values for Rosemount 8705 sensors with fluoropolymer liners (EN 1092-1)

| Size code | Line size | Fluoropolymer liners (in Newton-meters) | | | |
|---|---|---|---|---|---|
| | | PN 10 | PN 16 | PN 25 | PN 40 |
| 005 | 0.5 inch (15 mm) | N/A | N/A | N/A | 10 |
| 010 | 1 inch (25 mm) | N/A | N/A | N/A | 23 |
| 015 | 1.5 inch (40 mm) | N/A | N/A | N/A | 49 |
| 020 | 2 inch (50 mm) | N/A | 62 | N/A | 62 |
| 025 | 2.5 inch (65 mm) | N/A | 43 | N/A | 43 |
| 030 | 3 inch (80 mm) | N/A | 51 | N/A | 51 |
| 040 | 4 inch (100 mm) | N/A | 53 | 76 | 76 |
| 050 | 5.0 inch (125 mm) | N/A | 70 | N/A | 106 |
| 060 | 6 inch (150mm) | N/A | 95 | 132 | 132 |

**Table 3-3: Suggested flange bolt torque values for Rosemount 8705 sensors with fluoropolymer liners (EN 1092-1) *(continued)***

| Size code | Line size | Fluoropolymer liners (in Newton-meters) | | | |
|---|---|---|---|---|---|
| | | PN 10 | PN 16 | PN 25 | PN 40 |
| 080 | 8 inch (200 mm) | 135 | 90 | 134 | 180 |
| 100 | 10 inch (250 mm) | 103 | 123 | 200 | 265 |
| 120 | 12 inch (300 mm) | 118 | 170 | 205 | 285 |
| 140 | 14 inch (350 mm) | 166 | 223 | 344 | 450 |
| 160 | 16 inch (400 mm) | 227 | 298 | 445 | 662 |
| 180 | 18 inch (450 mm) | 198 | 299 | 391 | 452 |
| 200 | 20 inch (500 mm) | 225 | 408 | 474 | 558 |
| 240 | 24 inch (600 mm) | 300 | 601 | 625 | 903 |

**Table 3-4: Suggested flange bolt torque values for Rosemount 8705 sensors with non-fluoropolymer liners (EN 1092-1)**

| Size code | Line size | Non-fluoropolymer liners (in Newton-meters) | | | |
|---|---|---|---|---|---|
| | | PN 10 | PN 16 | PN 25 | PN 40 |
| 005 | 0.5 inch (15 mm) | N/A | N/A | N/A | 8 |
| 010 | 1 inch (25 mm) | N/A | N/A | N/A | 18 |
| 015 | 1.5 inch (40 mm) | N/A | N/A | N/A | 37 |
| 020 | 2 inch (50 mm) | N/A | 47 | N/A | 47 |
| 025 | 2.5 inch (65 mm) | N/A | 33 | N/A | 33 |
| 030 | 3 inch (80 mm) | N/A | 38 | N/A | 38 |
| 040 | 4 inch (100 mm) | N/A | 41 | 57 | 57 |
| 050 | 5.0 inch (125 mm) | N/A | 53 | N/A | 81 |
| 060 | 6 inch (150mm) | N/A | 72 | 100 | 100 |
| 080 | 8 inch (200 mm) | 103 | 68 | 102 | 137 |
| 100 | 10 inch (250 mm) | 78 | 94 | 152 | 201 |
| 120 | 12 inch (300 mm) | 89 | 129 | 156 | 216 |
| 140 | 14 inch (350 mm) | 126 | 169 | 261 | 341 |
| 160 | 16 inch (400 mm) | 172 | 226 | 337 | 502 |
| 180 | 18 inch (450 mm) | 150 | 227 | 296 | 343 |
| 200 | 20 inch (500 mm) | 170 | 309 | 359 | 423 |
| 240 | 24 inch (600 mm) | 228 | 456 | 474 | 685 |

## 3.3.2 Wafer sensors

When installing wafer sensors, there are several components that must be included and requirements that must be met.

**Figure 3-11: Wafer sensors installation components and assembly requirements**

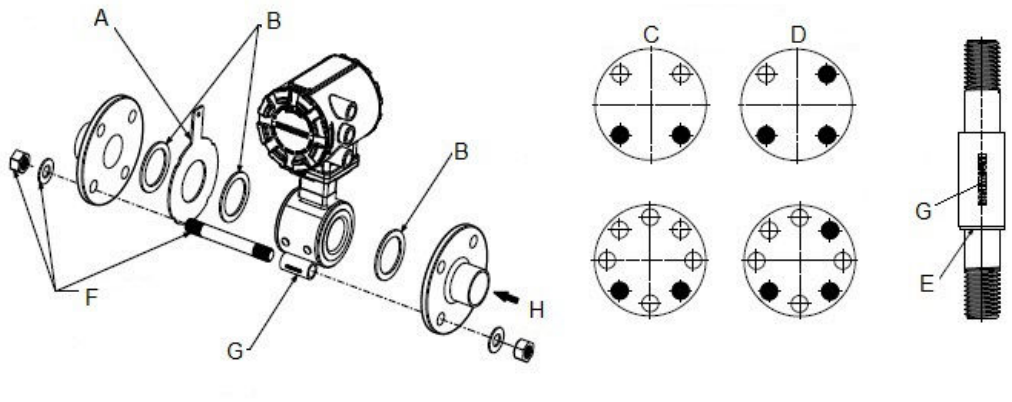


*A. Ground ring (optional)*
*B. Customer supplied gaskets*
*C. Spacer installation (horizontal meters)*
*D. Spacer installation (vertical meters)*
*E. O-ring*
*F. Installation studs, nuts, and washers (optional)*
*G. Wafer alignment spacer*
*H. Flow*

### Gaskets

The sensor requires a gasket at each process connection. The gasket material selected must be compatible with the process fluid and operating conditions. Gaskets are required on each side of a grounding ring. See Figure 3-11.

**Note**
Metallic or spiral-wound gaskets should not be used as they will damage the liner face of the sensor.

### Alignment spacers

On 1.5 inch through 8 inch (40 through 200 mm) line sizes, alignment spacers are **required** to ensure proper centering of the wafer sensor between the process flanges. To order an Alignment Spacer Kit (quantity 3 spacers), use p/n 08711-3211-xxxx, where xxxx equals the dash number shown in Table 3-5.

**Table 3-5: Alignment spacers**

| Dash-no. (-xxxx) | Line size | | Flange rating |
|---|---|---|---|
| | (in) | (mm) | |
| 0A15 | 1.5 | 40 | JIS 10K-20K |
| 0A20 | 2 | 50 | JIS 10K-20K |
| 0A30 | 3 | 80 | JIS 10K |
| 0B15 | 1.5 | 40 | JIS 40K |
| AA15 | 1.5 | 40 | ASME- 150# |
| AA20 | 2 | 50 | ASME - 150# |
| AA30 | 3 | 80 | ASME - 150# |

**Table 3-5: Alignment spacers *(continued)***

| Dash-no. (-xxxx) | Line size | | Flange rating |
|---|---|---|---|
| | (in) | (mm) | |
| AA40 | 4 | 100 | ASME - 150# |
| AA60 | 6 | 150 | ASME - 150# |
| AA80 | 8 | 200 | ASME - 150# |
| AB15 | 1.5 | 40 | ASME - 300# |
| AB20 | 2 | 50 | ASME - 300# |
| AB30 | 3 | 80 | ASME - 300# |
| AB40 | 4 | 100 | ASME - 300# |
| AB60 | 6 | 150 | ASME - 300# |
| AB80 | 8 | 200 | ASME - 300# |
| DB40 | 4 | 100 | EN 1092-1 - PN10/16 |
| DB60 | 6 | 150 | EN 1092-1 - PN10/16 |
| DB80 | 8 | 200 | EN 1092-1 - PN10/16 |
| DC80 | 8 | 200 | EN 1092-1 - PN25 |
| DD15 | 1.5 | 40 | EN 1092-1 - PN10/16/25/40 |
| DD20 | 2 | 50 | EN 1092-1 - PN10/16/25/40 |
| DD30 | 3 | 80 | EN 1092-1 - PN10/16/25/40 |
| DD40 | 4 | 100 | EN 1092-1 - PN25/40 |
| DD60 | 6 | 150 | EN 1092-1 - PN25/40 |
| DD80 | 8 | 200 | EN 1092-1 - PN40 |
| RA80 | 8 | 200 | AS40871-PN16 |
| RC20 | 2 | 50 | AS40871-PN21/35 |
| RC30 | 3 | 80 | AS40871-PN21/35 |
| RC40 | 4 | 100 | AS40871-PN21/35 |
| RC60 | 6 | 150 | AS40871-PN21/35 |
| RC80 | 8 | 200 | AS40871-PN21/35 |

### Studs

Wafer sensors require threaded studs. See Figure 3-12 for torque sequence. Always check for leaks at the flanges after tightening the flange bolts. All sensors require a second tightening 24 hours after initial flange bolt tightening.

**Table 3-6: Stud specifications**

| Nominal sensor size | Stud specifications |
|---|---|
| 0.15–1-in. (4–25 mm) | 316 SST ASTM A193, Grade B8M, Class 1 threaded mounted studs |
| 1½–8-in. (40–200 mm) | CS, ASTM A193, Grade B7, threaded mounting studs |

**Figure 3-12: Flange bolt torquing sequence**

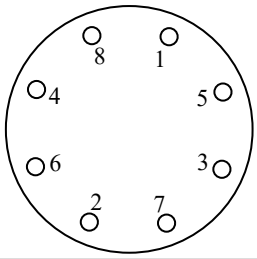


## Installation

### Procedure

1. Insert studs for the bottom side of the sensor between the pipe flanges and center the alignment spacer in the middle of the stud. See Figure 3-11 for the bolt hole locations recommended for the spacers provided. Stud specifications are listed in Table 3-6.
2. Place the sensor between the flanges. Make sure the alignment spacers are properly centered on the studs. For vertical flow installations slide the o-ring over the stud to keep the spacer in place. See Figure 3-11. Ensure the spacers match the flange size and class rating for the process flanges. See Table 3-5.
3. Insert the remaining studs, washers, and nuts.
4. Tighten to the torque specifications shown in Table 3-7. Do not over-tighten the bolts or the liner may be damaged.

**Table 3-7: Rosemount 8711 torque specifications**

| Size code | Line size | Pound-feet | Newton-meter |
|---|---|---|---|
| 15F | 0.15 inch (4 mm) | 5 | 7 |
| 30F | 0.30 inch (8 mm) | 5 | 7 |
| 005 | ½ inch (15 mm) | 5 | 7 |
| 010 | 1 inch (25 mm) | 10 | 14 |
| 015 | 1.5 inch (40 mm) | 15 | 20 |
| 020 | 2 inch (50 mm) | 25 | 34 |
| 030 | 3 inch (80 mm) | 40 | 54 |
| 040 | 4 inch (100 mm) | 30 | 41 |
| 060 | 6 inch (150 mm) | 50 | 68 |
| 080 | 8 inch (200 mm) | 70 | 95 |

## 3.3.3 Sanitary sensors

### IDF Fitting

The 8721 uses an IDF (international dairy federation) style fitting to connect the process connection fitting to the meter body.

### IDF Sanitary fitting torque

Hand tighten IDF nut to approximately 50 in-lbs [5 ½ Newton-meters (N-m)] of torque. Re-tighten after a few minutes until there are no leaks (up to 130 in-lbs [14 ½ Newton-meters (N-m)] of torque). Fittings that continue to leak at a higher torque may be distorted or damaged.

**Note**
Gaskets are supplied between the IDF fitting and the process connection fitting, such as a Tri-Clamp fitting, on all Rosemount 8721 Sanitary sensors except when the process connection fittings are not supplied and the only connection type is an IDF fitting.

### Gaskets

The sensor requires a gasket at each of its connections to adjacent devices or piping. The gasket material selected must be compatible with the process fluid and operating conditions.

### Alignment and clamping of user-supplied clamp

Standard plant practices should be followed when installing a magmeter with sanitary fittings. Unique torque values and bolting techniques are not required.

**Figure 3-13: Sanitary sensor gasket and clamp alignment**

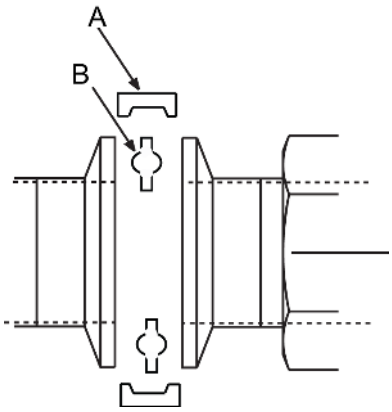


*A. User-supplied clamp*
*B. User-supplied gasket*

## 3.4 Process reference connection

The figures shown in this section illustrate best practice installations for process reference connections only. For installations in conductive, unlined pipe it may be acceptable to use one ground ring or one lining protector to establish a process reference connection. Earth safety ground is also required as part of this installation, but is not shown in the figures. Follow national, local, and plant electrical codes for safety ground.

Use Table 3-8 to determine which process reference option to follow for proper installation.

**Table 3-8: Process reference options**

| Type of pipe | Grounding straps | Grounding rings | Reference electrode | Lining protectors |
|---|---|---|---|---|
| Conductive unlined pipe | See Figure 3-14 | See Figure 3-15 | See Figure 3-17 | See Figure 3-15 |

**Table 3-8: Process reference options *(continued)***

| Type of pipe | Grounding straps | Grounding rings | Reference electrode | Lining protectors |
|---|---|---|---|---|
| Conductive lined pipe | Insufficient grounding | See Figure 3-15 | See Figure 3-14 | See Figure 3-15 |
| Non-conductive pipe | Insufficient grounding | See Figure 3-16 | Not recommended | See Figure 3-16 |

**Note**
For line sizes 10-inch and larger, the ground strap may come attached to the sensor body near the flange. See Figure 3-18.

**Figure 3-14: Grounding straps in conductive unlined pipe or reference electrode in lined pipe**

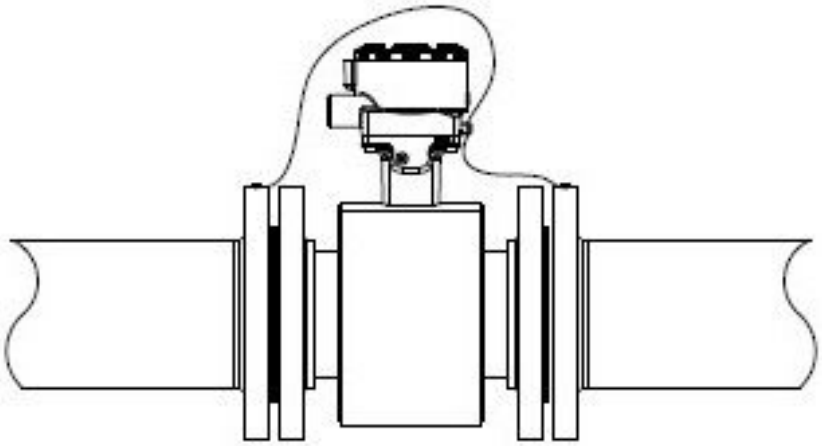

**Figure 3-15: Grounding with grounding rings or lining protectors in conductive pipe**

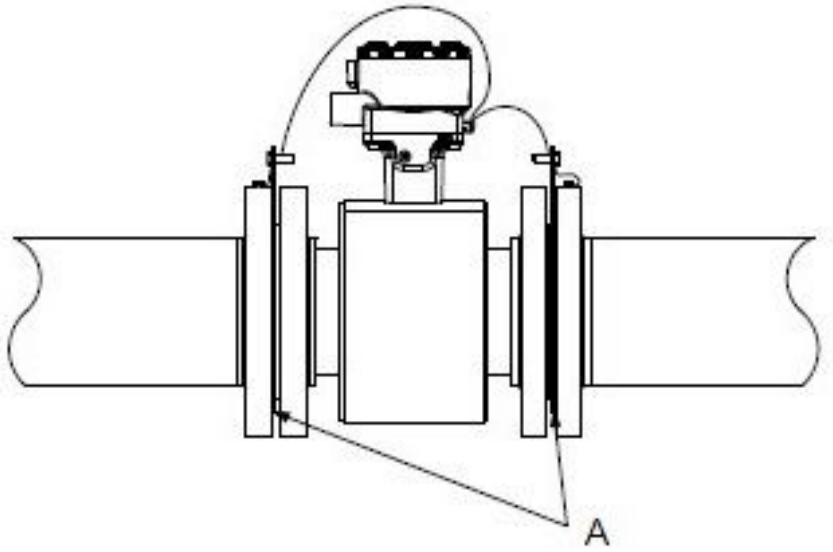


*A. Grounding rings or lining protectors*

**Figure 3-16: Grounding with grounding rings or lining protectors in non-conductive pipe**

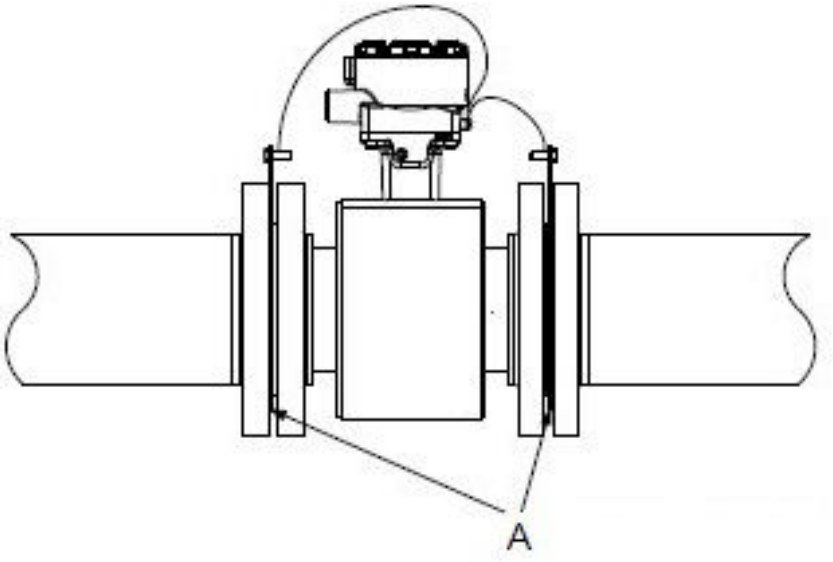


*A. Grounding rings or lining protectors*

**Figure 3-17: Grounding with reference electrode in conductive unlined pipe**

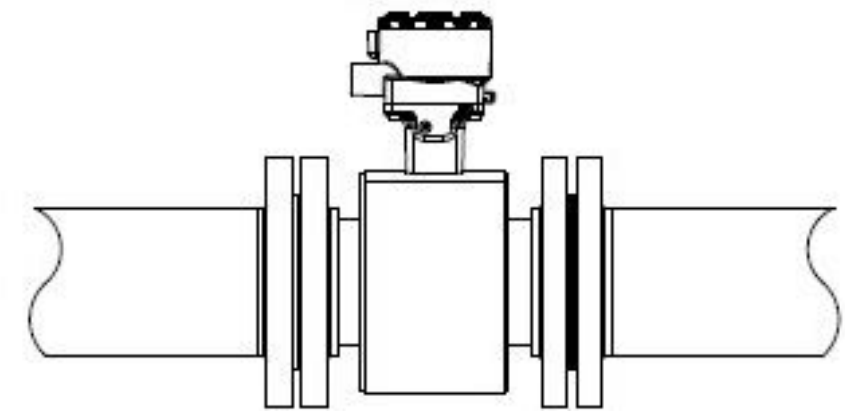

**Figure 3-18: Grounding for line sizes 10-in. and larger**

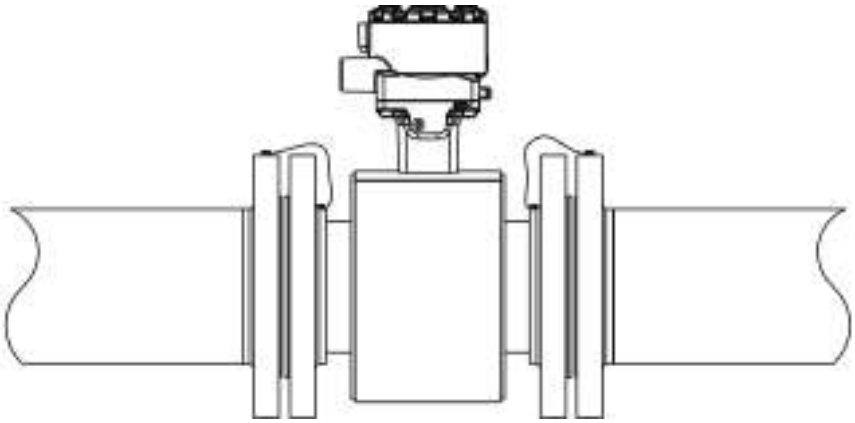

# 4 Remote Transmitter Installation

This chapter provides instructions for installing and wiring a remotely mounted transmitter.

**Related information**

Sensor Installation

## 4.1 Pre-installation

Before installing the transmitter, there are several pre-installation steps that should be completed to make the installation process easier:

- Identify options and configurations that apply to your application
- Set the hardware switches if necessary
- Consider mechanical, electrical, and environmental requirements

**Note**
Refer to Product specifications for more detailed requirements.

### Identify options and configurations

The typical transmitter installation includes a device power connection, a 4-20mA output connection, and sensor coil and electrode connections. Other applications may require one or more of the following configurations or options:

- Pulse output
- Discrete input/discrete output
- HART multidrop configuration

### Hardware switches

The transmitter may have up to four user-selectable hardware switches. These switches set the alarm mode, internal/external analog power, internal/external pulse power, and transmitter security. The standard configuration for these switches when shipped from the factory is as follows:

**Table 4-1: Hardware switch default settings**

| Setting | Factory configuration |
|---|---|
| Alarm mode | High |
| Internal/external analog power | Internal |
| Internal/external pulse power | External |
| Transmitter security | Off |

The analog power switch and pulse power switches are not available when ordered with intrinsically safe output, ordering code B.

In most cases, it is not necessary to change the setting of the hardware switches. If the switch settings need to be changed, refer to Hardware switches.

Be sure to identify any additional options and configurations that apply to the installation. Keep a list of these options for consideration during the installation and configuration procedures.

## Mechanical considerations

The mounting site for the transmitter should provide enough room for secure mounting, easy access to conduit entries, full opening of the transmitter covers, and easy readability of the Local Operator Interface (LOI) screen (if equipped).

### Figure 4-1: Rosemount 8712EM Dimensional Drawing

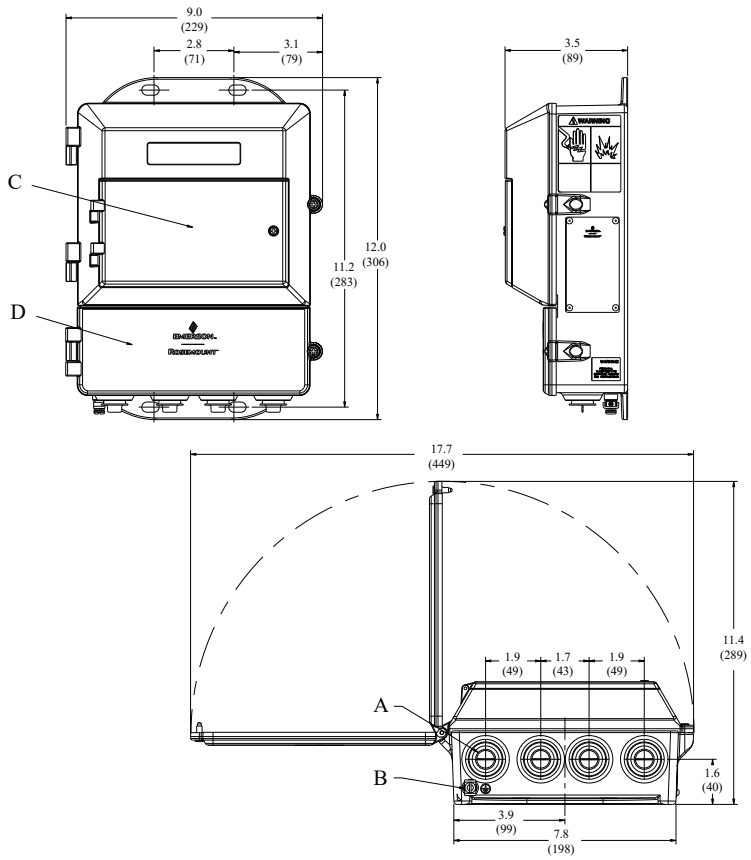


*A. Conduit entry, ½-14 NPT (4 places)*
*B. Ground lug*
*C. LOI keypad cover*
*D. Lower cover opens for electrical connections*

**Note**
Dimensions are in inches [Millimeters].

## Electrical considerations

Before making any electrical connections to the transmitter, consider national, local, and plant electrical installation requirements. Be sure to have the proper power supply, conduit, and other accessories necessary to comply with these standards.

The transmitter requires external power. Ensure access to a suitable power source.

### Table 4-2: Electrical Data

| Rosemount 8712EM Flow Transmitter | |
|---|---|
| Power input | AC power:<br>90–250VAC, 0.45A, 40VA |
| | Standard DC power:<br>12–42VDC, 1.2A, 15W |
| Pulsed circuit | Internally powered (Active): Outputs up to 12VDC, 12.1mA, 73mW<br>Externally powered (Passive): Input up to 28VDC, 100mA, 1W |
| 4-20mA output circuit | Internally Powered (Active): Outputs up to 25mA, 24VDC, 600mW<br>Externally Powered (Passive): Input up to 25mA, 30VDC, 750mW |
| Um | 250V |
| Coil excitation output | 500mA, 40V max, 9W max |

### Environmental considerations

To ensure maximum transmitter life, avoid extreme temperatures and excessive vibration. Typical problem areas include the following:

- High-vibration lines with integrally mounted transmitters
- Tropical or desert installations in direct sunlight
- Outdoor installations in arctic climates

Remote mounted transmitters may be installed in the control room to protect the electronics from the harsh environment and to provide easy access for configuration or service.

### Table 4-3: Transmitter housing environmental ratings

| Type | Rating |
|---|---|
| Ingress protection | IP66, IP69 |
| NEMA | 4X |
| Pollution Degree | 2 |
| Maximum altitude rating | • 13,123 ft (4000 m) at rated input power voltage (90–250 VAC)<br>• 16,404 ft (5000 m) at maximum input power voltage of 150 VAC |

**Note**
For complete environmental and other specifications, see Product specifications.

## 4.2 Transmitter symbols

| | |
|---|---|
| Caution symbol — check product documentation for details |  |

| | |
|---|---|
| Protective conductor (grounding) terminal |  |

## 4.3 Mounting

Wall mount transmitters are shipped with mounting hardware for use on a 2 inch (50 mm) pipe or flat surface.

**Figure 4-2: Mounting bracket**

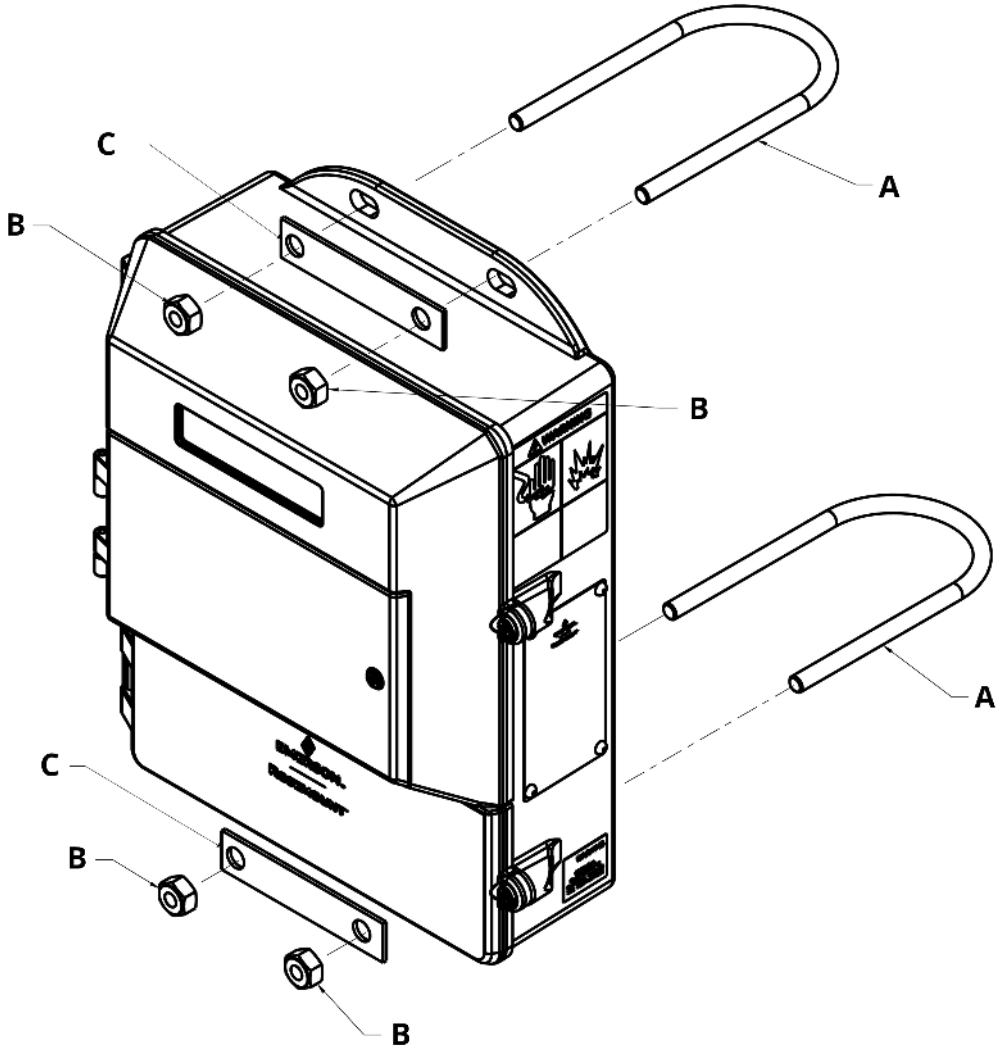


*A. U-bolt*
*B. Fasteners*
*C. Washer plate*

### 4.3.1 Pipe mounting

**Procedure**

1. Assemble the hardware and transmitter housing on the pole as shown in Figure 4-2.
2. Tighten the nuts to ensure a snug fit.

### 4.3.2 Surface mounting

**Procedure**

Attach the transmitter to the mounting location using customer supplied mounting screws. The installation of the transmitter shall be rated for four (4) times the weight of the transmitter or 44lbs (20kgs).

## 4.4 Wiring

### 4.4.1 Conduit entries and connections

Transmitter conduit entries ports are ½"-14NPT as standard, M20 conduit connections will use an adapter. Conduit connections should be made in accordance with national, local, and plant electrical codes. Unused conduit entries should be sealed with the appropriate certified plugs. The plastic shipping plugs do not provide ingress protection.

### 4.4.2 Conduit requirements

- For installations with an intrinsically safe electrode circuit, a separate conduit for the coil cable and the electrode cable may be required. Refer to Product certifications.
- For installations with non-intrinsically safe electrode circuit, or when using the combination cable, a single dedicated conduit run for the coil drive and electrode cable between the sensor and the remote transmitter may be acceptable. Removal of the barriers for intrinsic safety isolation is permitted for non-intrinsically safe electrode installations.
- Bundled cables from other equipment in a single conduit are likely to create interference and noise in the system. See Figure 4-3.
- Electrode cables should not be run together in the same cable tray with power cables.
- Output cables should not be run together with power cables.
- Select conduit size appropriate to feed cables through to the flowmeter.

**Figure 4-3: Best practice conduit preparation**

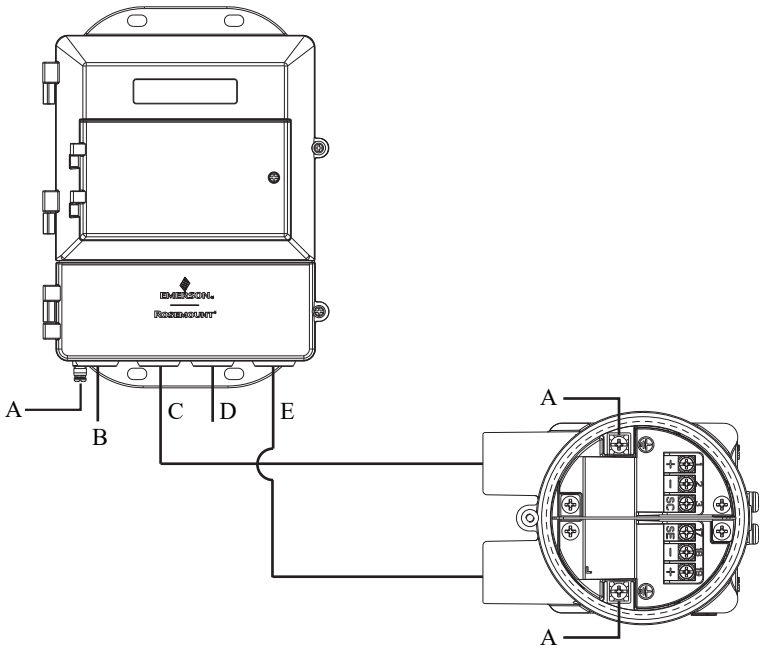


*A. Safety ground*
*B. Power*
*C. Coil*
*D. Output*
*E. Electrode*

## 4.4.3 Sensor to transmitter wiring

### Wiring details

Remote cable kits are available as individual component cables or as a combination coil/electrode cable. They can be ordered directly using the kit numbers shown in Table 4-4, Table 4-5, and Table 4-6. Equivalent Alpha cable part numbers are also provided as an alternative. To order cable, specify length as quantity desired. Equal length of component cables is required.

Examples:

- 25 feet = Qty (25) 08732-0065-0001
- 25 meters = Qty (25) 08732-0065-0002

**Table 4-4: Component cable kits - standard temperature (-20°C to 75°C)**

| Cable kit # | Description | Individual cable | Alpha p/n |
|---|---|---|---|
| 08732-0065-0001 (feet) | Kit, component cables, Std temp (includes Coil and Electrode) | Coil<br>Electrode | 2442C<br>2413C |
| 08732-0065-0002 (meters) | Kit, component cables, Std temp (includes Coil and Electrode) | Coil<br>Electrode | 2442C<br>2413C |

**Table 4-4: Component cable kits - standard temperature (-20°C to 75°C) *(continued)***

| Cable kit # | Description | Individual cable | Alpha p/n |
|---|---|---|---|
| 08732-0065-0003 (feet) | Kit, component cables, Std temp (includes Coil and I.S. Electrode) | Coil<br>Instrinsically Safe Blue Electrode | 2442C<br>Not available |
| 08732-0065-0004 (meters) | Kit, component cables, Std temp (includes Coil and I.S. Electrode) | Coil<br>Instrinsically Safe Blue Electrode | 2442C<br>Not available |

**Table 4-5: Component cable kits - extended temperature (-50°C to 125°C)**

| Cable kit # | Description | Individual cable | Alpha p/n |
|---|---|---|---|
| 08732-0065-1001 (feet) | Kit, Component Cables, Ext Temp. (includes Coil and Electrode) | Coil<br>Electrode | Not available<br>Not available |
| 08732-0065-1002 (meters) | Kit, Component Cables, Ext Temp. (includes Coil and Electrode) | Coil<br>Electrode | Not available<br>Not available |
| 08732-0065-1003 (feet) | Kit, Component Cables, Ext Temp. (includes Coil and I.S. Electrode) | Coil<br>Intrinsically Safe Blue Electrode | Not available<br>Not available |
| 08732-0065-1004 (meters) | Kit, Component Cables, Ext Temp. (includes Coil and I.S. Electrode) | Coil<br>Intrinsically Safe Blue Electrode | Not available<br>Not available |

**Table 4-6: Combination cable kits - coil and electrode cable (-20°C to 80°C)**

| Cable kit # | Description |
|---|---|
| 08732-0065-2001 (feet) | Kit, Combination Cable, Standard |
| 08732-0065-2002 (meters) | |
| 08732-0065-3001 (feet) | Kit, Combination Cable, Submersible<br>(80°C dry/60°C Wet)<br>(33ft Continuous) |
| 08732-0065-3002 (meters) | |

### Cable requirements

Shielded twisted pairs or triads must be used. For installations using the individual coil drive and electrode cable, see Figure 4-4. Cable lengths should be limited to less than 500 feet (152 m). Consult factory for length between 500–1000 feet (152–304 m). Equal length cable is required for each. For installations using the combination coil drive/electrode cable, see Figure 4-5. Combination cable lengths should be limited to less than 330 feet (100 m).

**Figure 4-4: Individual component cables**

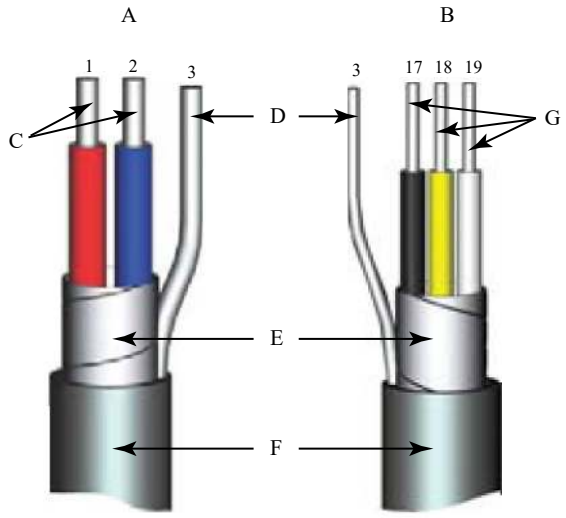


*A. Coil drive*
*B. Electrode*
*C. Twisted, stranded, insulated 14 AWG conductors*
*D. Drain*
*E. Overlapping foil shield*
*F. Outer jacket*
*G. Twisted, stranded, insulated 20 AWG conductors*

- 1 = Red
- 2 = Blue
- 3 = Drain
- 17 = Black
- 18 = Yellow
- 19 = White

**Figure 4-5: Combination coil and electrode cable**

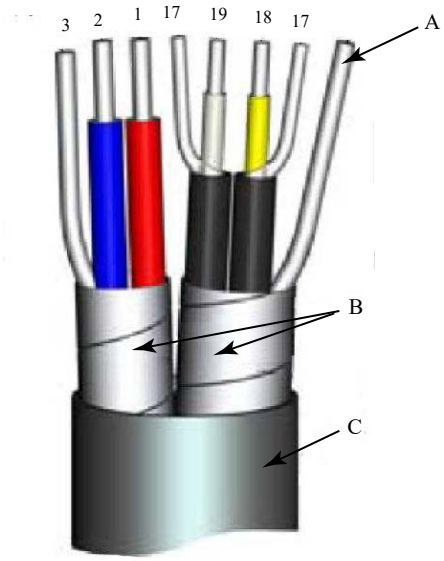


*A. Electrode shield drain*
*B. Overlapping foil shield*
*C. Outer jacket*

- 1 = Red
- 2 = Blue
- 3 = Drain
- 17 = Reference
- 18 = Yellow
- 19 = White

### Cable preparation

Prepare the ends of the coil drive and electrode cables as shown in Figure 4-6. Remove only enough insulation so that the exposed conductor fits completely under the terminal connection. Best practice is to limit the unshielded length (D) of each conductor to less than one inch. Excessive removal of insulation may result in an unwanted electrical short to the transmitter housing or other terminal connections. Excessive unshielded length, or failure to connect cable shields properly, may also expose the unit to electrical noise, resulting in an unstable meter reading.

**Figure 4-6: Cable ends**

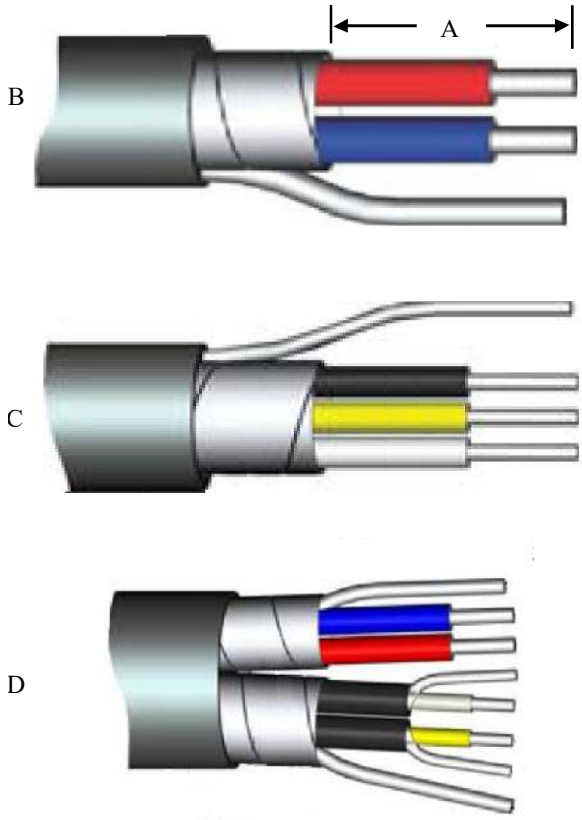


*A. Unshielded length*
*B. Coil*
*C. Electrode*
*D. Combination*

**⚠ WARNING**

Shock hazard! Potential shock hazard across remote junction box terminals 1 and 2 (40V).

**⚠ WARNING**

Explosion hazard! Electrodes exposed to process. Use only compatible transmitter and approved installation practices. For process temperatures greater than 284°F (140°C), use a wire rated for 257°F (125°C).

## Remote junction box terminal blocks

**Figure 4-7: Remote junction box views**

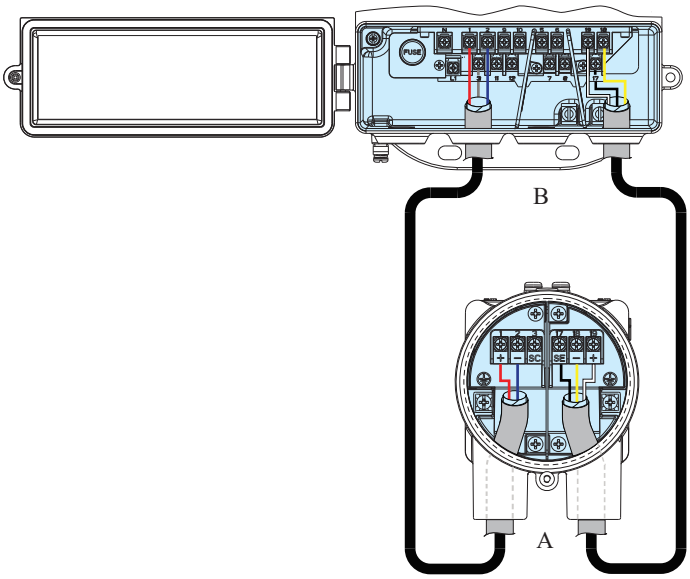


*A. Sensor*
*B. Transmitter*

**Note**
Junction box appearance and configuration may vary, but terminal numbering is consistent for all junction box types.

**Table 4-7: Sensor/transmitter wiring**

| Wire color | Sensor terminal | Transmitter terminal |
|---|---|---|
| Red | 1 | 1 |
| Blue | 2 | 2 |
| Coil drain | 3 or float | 3 |
| Black | 17 | 17 |
| Yellow | 18 | 18 |
| White | 19 | 19 |
| Electrode drain | ⏚ or float | ⏚ |

**Note**
For hazardous locations, refer to Product certifications.

## 4.4.4 Wiring sensor to transmitter

**Figure 4-8: Wiring using component cable**

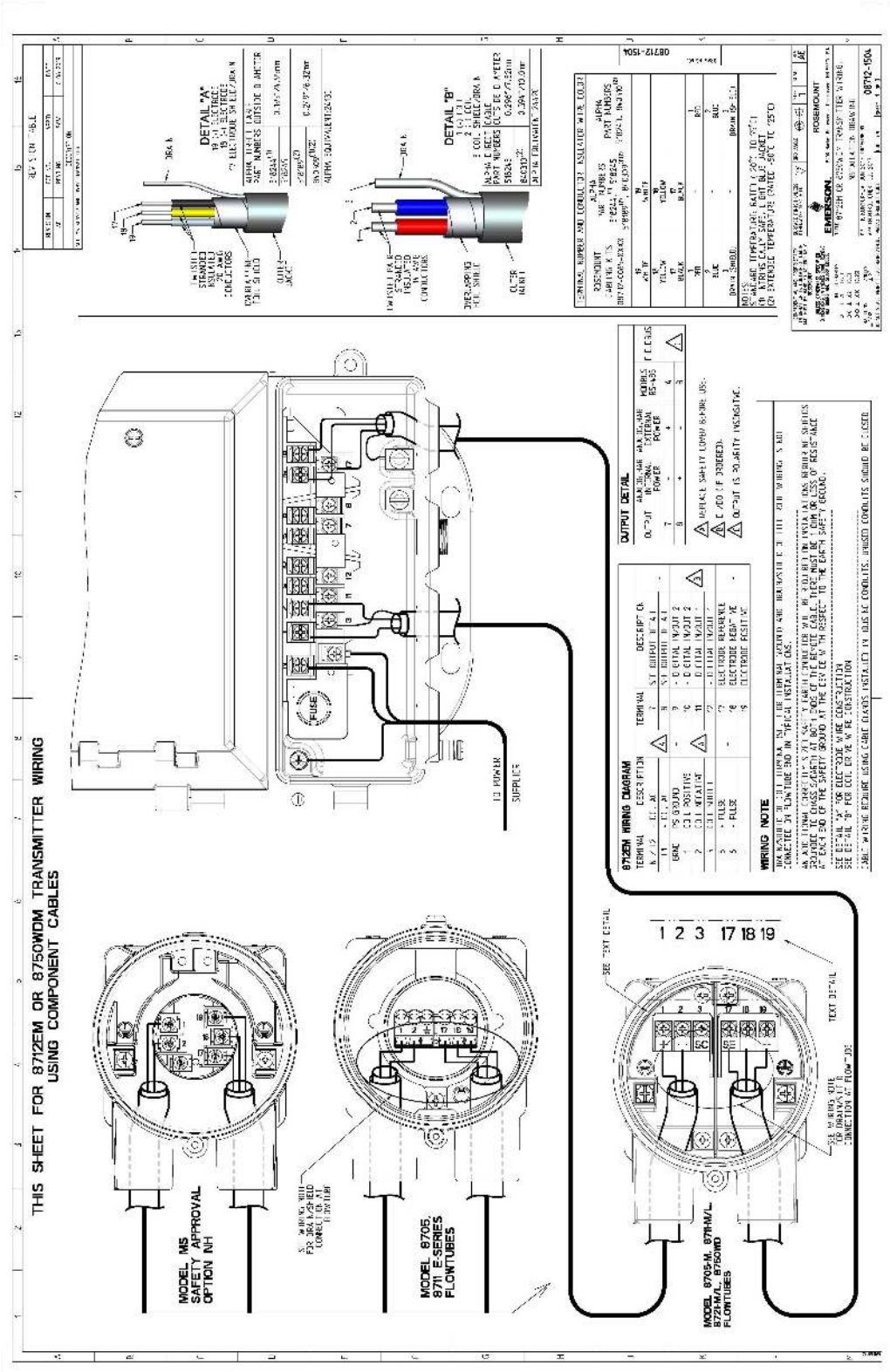

**Figure 4-9: Wiring using combination cable**

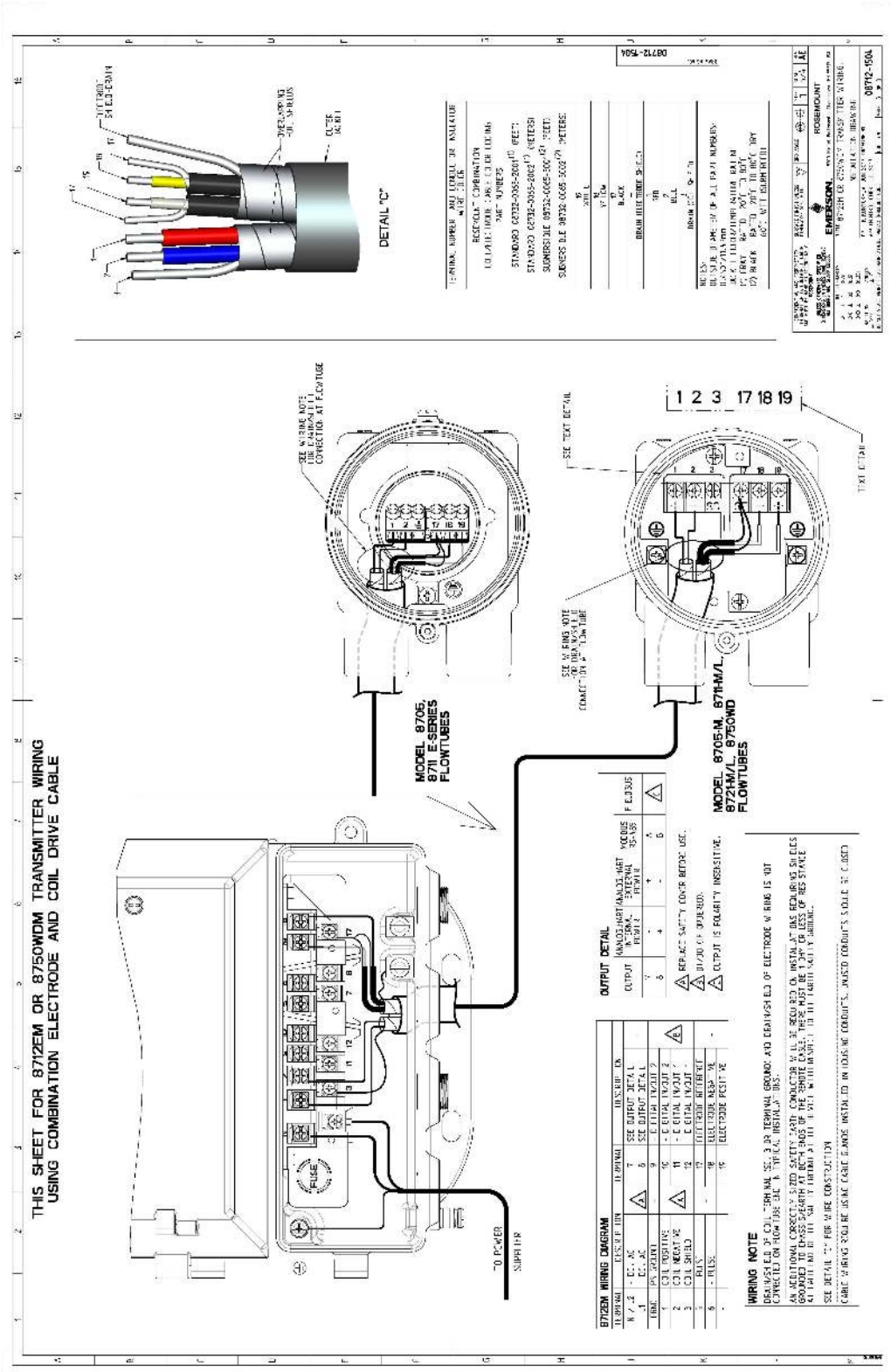

## 4.4.5 Power and I/O terminal blocks

Open the bottom cover of the transmitter to access the terminal block.

**Note**
To connect pulse output and/or discrete input/output, refer to Advanced installation details, and for installations with intrinsically safe outputs, refer to Product certifications.

**Figure 4-10: Terminal blocks**

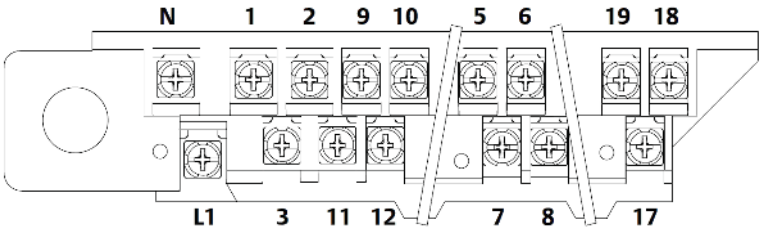


**Table 4-8: Power and I/O terminals**

| Terminal number | AC version | DC version |
|---|---|---|
| 1 | Coil Positive | Coil Positive |
| 2 | Coil Negative | Coil Negative |
| 3 | Coil Shield | Coil Shield |
| 5 | + Pulse | + Pulse |
| 6 | – Pulse | – Pulse |
| 7(1) | Analog HART | Analog HART |
| 8(1) | Analog HART | Analog HART |
| 9(2) | + Discrete Out 2 | + Discrete Out 2 |
| 10(2) | – Discrete Out 2 | – Discrete Out 2 |
| 11(2) | + Discrete In/Out 1 | + Discrete In/Out 1 |
| 12(2) | – Discrete In/Out 1 | – Discrete In/Out 1 |
| 17 | Electrode Reference | Electrode Reference |
| 18 | Electrode Negative | Electrode Negative |
| 19 | Electrode Positive | Electrode Positive |
| N | AC (Neutral)/L2 | DC (–) |
| L1 | AC L1 | DC (+) |

*(1) Note Polarity: Internally Powered, Terminal 7 (–) Analog HART, Terminal 8 (+) Analog HART. Externally Powered, Terminal 7 (+) Analog HART, Terminal 8 (–) Analog HART*
*(2) Only available with ordering code AX.*

## 4.4.6 Powering the transmitter

Before connecting power to the transmitter, be sure to have the necessary electrical supplies and required power source:

- The AC powered transmitter requires 90–250V AC (50/60Hz).
- The DC (standard) powered transmitter requires 12–42V DC.

Wire the transmitter according to national, local, and plant electrical requirements.

If installing in a hazardous location, verify that the meter has the appropriate hazardous area approval. Each meter has a hazardous area approval tag attached to the top of the transmitter housing.

### Supply wire requirements

Use 10–18 AWG wire rated for the proper temperature of the application. For wire 10–14 AWG, use lugs or other appropriate connectors. For connections in ambient temperatures above 122 °F (50 °C), use a wire rated for 194 °F (90 °C). For DC powered transmitters with extended cable lengths, verify that there is a minimum of 12 VDC at the terminals of the transmitter with the device under load.

### Electrical disconnect requirements

Connect the device through an external disconnect or circuit breaker per national and local electrical code.

### Overcurrent protection

The transmitter requires overcurrent protection of the supply lines. Fuse rating and compatible fuses are shown in Line power fuses.

### Installation category

The installation category for the transmitter is OVERVOLTAGE CAT II.

### AC power system installation requirements

#### Neutral-earth power requirements

The power system must have a neutral that is locally bonded to earth, or provide both line to earth and neutral to earth voltage limitation of no more than 250 VAC.

#### Power line impedance

Sources of inductance on the AC power system, such as isolation transformers, must be limited to less than 1 mH at 120 VAC, and 2 mH at 240 VAC.

### AC power supply requirements

Units powered by 90 - 250VAC have the following power requirements. Peak inrush is 35.7A at 250VAC supply, lasting approximately 1ms. Inrush for other supply voltages can be estimated with: Inrush (Amps) = Supply (Volts) / 7.0

**Figure 4-11: AC current requirements**

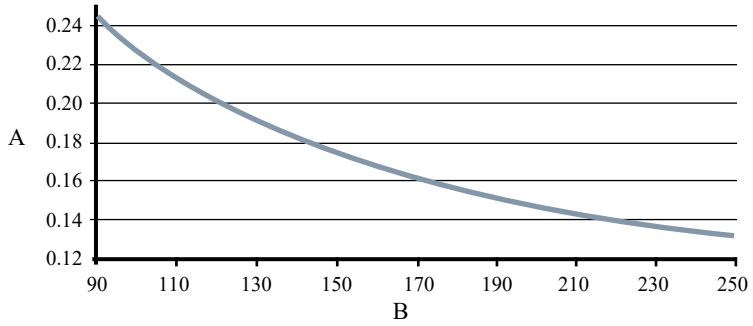


*A. Supply current (amps)*
*B. Power supply (VAC)*

**Figure 4-12: Apparent power**

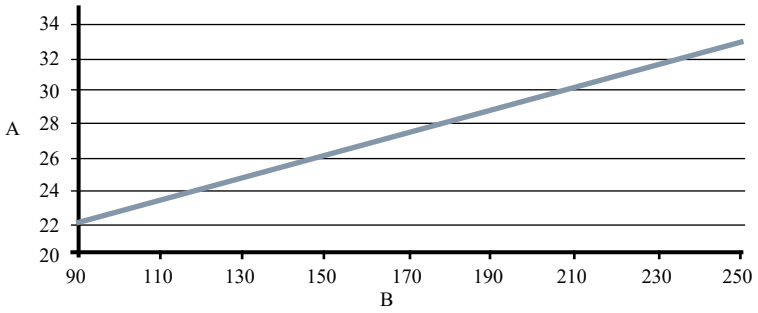


*A. Apparent power (VA)*
*B. Power supply (VAC)*

### DC power supply requirements

Standard DC units powered by 12VDC power supply may draw up to 1.2A of current steady state. Low power DC units may draw up to 0.25A of current steady state. Peak inrush is 42A at 42VDC supply, lasting approximately 1ms. Inrush for other supply voltages can be estimated with: Inrush (Amps) = Supply (Volts) / 1.0

**Figure 4-13: DC current requirements**

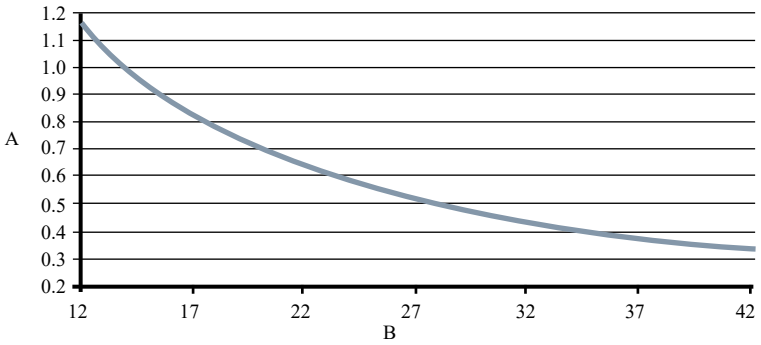


*A. Supply current (amps)*
*B. Power supply (VDC)*

**Table 4-9: Fuse requirements**

| Power system | Power supply | Fuse rating | Manufacturer |
|---|---|---|---|
| AC power | 90–250VAC | 2 Amp quick acting | Bussman AGC2 or equivalent |
| DC power | 12–42VDC | 3 Amp quick acting | Bussman AGC3 or equivalent |

### Power terminals

For AC powered transmitter (90–250VAC, 50/60 Hz):

- Connect AC Neutral to Terminal N and AC Line to Terminal L1.

For DC powered transmitter:

- Connect negative to Terminal N and positive to Terminal L1.
- DC powered units may draw up to 1.2A.

### Covers

Use the transmitter lower door screw to secure the terminal compartment after the instrument has been wired and powered up. Follow these steps to ensure the housing is properly sealed to meet ingress protection requirements:

1. Ensure all wiring is complete and close the lower door.
2. Tighten the lower door screw until the lower door is tight against the housing. Metal to metal contact of the screw bosses is required to ensure a proper seal.

   **Note**
   Application of excessive torque may strip the threads or break the screw.

3. Verify the lower door is secure.

## 4.4.7 Analog output

The analog output signal is a 4-20 mA current loop. Depending on the IS output option, the loop can be powered internally or externally via a hardware switch located on the front of the electronics stack. The switch is set to internal power when shipped from the

factory. Intrinsically safe analog output requires a shielded twisted pair cable. For HART communication, a minimum resistance of 250 ohms is required. It is recommended to use individually shielded twisted pair cable. The minimum conductor size is 24 AWG (0.51 mm) diameter for cable runs less than 5,000 feet (1,500 m) and 20 AWG (0.81 mm) diameter for longer distances.

**Note**
For more information about the analog output characteristics, see Output signals.

**Figure 4-14: Analog output wiring**

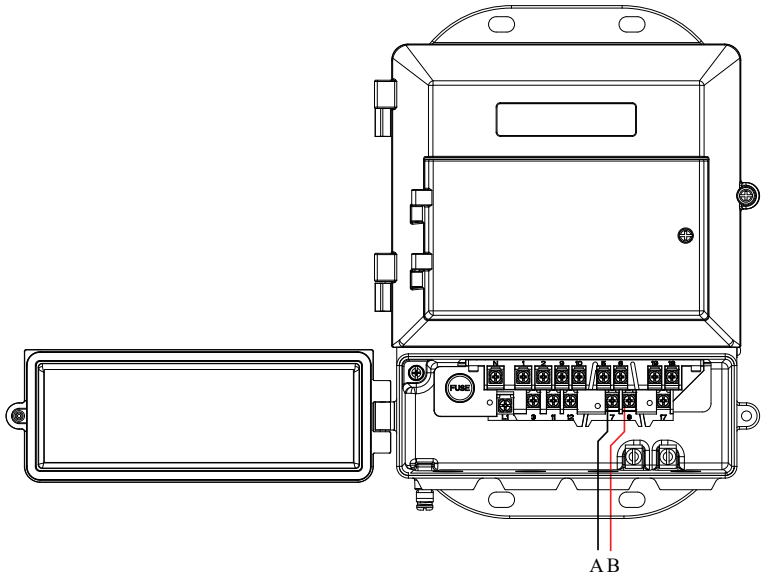


*A. Terminal #7*
*B. Terminal #8*

**Note**
Terminal polarity for the analog output is reversed between internally and externally powered.

**Table 4-10: Terminal assignment by power source type**

| Power source | Terminal #7 | Terminal #8 |
|---|---|---|
| Internal | 4–20 mA negative (–) | 4–20 mA positive (+) |
| External | 4–20 mA positive (+) | 4–20 mA negative (–) |

**Figure 4-15: Analog loop load limitations**

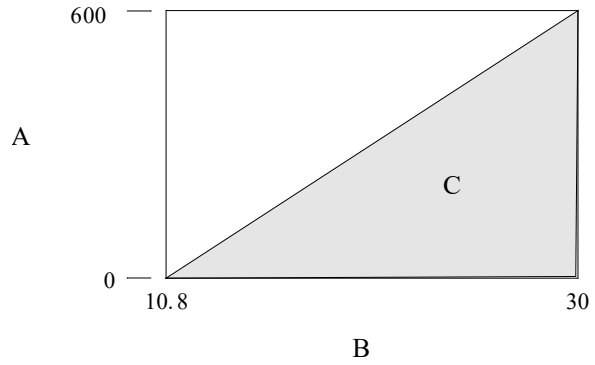


*A. Load (ohms)*
*B. Power supply (volts)*
*C. Operating region*

- $R_{max}$ = 31.25 ($V_{ps}$–10.8)
- $V_{ps}$ = power supply voltage (volts)
- $R_{max}$ = maximum loop resistance (ohms)

# 5 Basic Configuration

Once the flow meter is installed and power has been supplied, the transmitter must be configured using the LOI, if equipped, or a configuration tool, such as ProLink III Software, AMS Device Manager, or AMS Trex Device Communicator. Configuration settings are saved in nonvolatile memory within the transmitter. Descriptions of more advanced functions are included in Advanced Configuration Functionality.

## 5.1 Basic Setup

### Tag

Tag is the quickest and shortest way of identifying and distinguishing between transmitters. Transmitters can be tagged according to the requirements of your application. HART Rev 5 supports 8 character short tag. HART Rev 7 supports 8 character short tag and 32 character long tag.

### Calibration number

The sensor calibration number is a 16-digit number generated at the factory during flow calibration, is unique to each sensor, and is located on the sensor nameplate.

### Flow units (PV)

The flow units variable specifies the format in which the flow rate will be displayed. Units should be selected to meet your particular metering needs. See Measurement units.

### Line size

The line size (sensor size) must be set to match the actual sensor connected to the transmitter. The size must be specified in inches.

### Upper range value (URV)

The URV sets the 20 mA point for the analog output. This value is typically set to full-scale flow. The units that appear will be the same as those selected under the flow units parameter. The URV may be set between –39.3 ft/s to 39.3 ft/s (–12 m/s to 12m/s). There must be at least 1 ft/s (0.3 m/s) span between the URV and LRV.

**Note**
If entering a negative number, the minus sign must be entered in the furthest left position on the LOI.

### Lower range value (LRV)

The LRV sets the 4 mA point for the analog output. This value is typically set to zero flow. The units that appear will be the same as those selected under the flow units parameter. The LRV may be set between –39.3 ft/s to 39.3 ft/s (–12 m/s to 12m/s). There must be at least 1 ft/s (0.3 m/s) span between the URV and LRV.

**Note**
If entering a negative number, the minus sign must be entered in the furthest left position on the LOI.

## 5.2 Local operator interface (LOI)

To access the transmitter menu, press the XMTR MENU key. Use the UP, DOWN, LEFT(E), and RIGHT arrows to navigate the menu structure.

The display can be locked to prevent unintentional configuration changes. The display lock can be activated through a HART communication device, or by holding the UP arrow for three seconds and then following the on-screen instructions.

## 5.3 Other configuration tools

Table 5-1 shows the approximate category or location of basic setup parameters for typical configuration tools.

**Table 5-1: Approximate setup category/locations for typical configuration tools**

| Function | Category/Location |
|---|---|
| Flow Units | **Basic Setup** |
| PV Upper Range Value (URV) | **Basic Setup → AO** |
| PV Lower Range Value (LRV) | **Basic Setup → AO** |
| Calibration Number | **Basic Setup → Setup** |
| Line Size | **Basic Setup → Setup** |
| Tag | **Device Info → Identification** |
| Long Tag | **Device Info → Identification** |

## 5.4 Measurement units

**Table 5-2: Volumetric flow units**

| | | | |
|---|---|---|---|
| gal/sec | gal/min | gal/hr | gal/day |
| L/sec | L/min | L/hr | L/day |
| ft3/sec | ft3/min | ft3/hr | ft3/day |
| | cm3/min | | Mgal/day (million gallons) |
| m3/sec | m3/min | m3/hr | m3/day |
| Impgal/sec | Impgal/min | Impgal/hr | Impgal/day |
| B31/sec (1 barrel = 31 gallons) | B31/min (1 barrel = 31 gallons) | B31/hr (1 barrel = 31 gallons) | B31/day (1 barrel = 31 gallons) |
| B42/sec (1 barrel = 42 gallons) | B42/min (1 barrel = 42 gallons) | B42/hr (1 barrel = 42 gallons) | B42/day (1 barrel = 42 gallons) |

**Table 5-3: Mass flow units**

| | | | |
|---|---|---|---|
| lbs/sec | lbs/min | lbs/hr | lbs/day |
| kg/sec | kg/min | kg/hr | kg/day |
| | (s) tons/min | (s) tons/hr | (s) tons/day |
| | (m) tons/min | (m) tons/hr | (m) tons/day |

**Table 5-4: Velocity units**

| | |
|---|---|
| ft/sec | m/sec |

# 6 Advanced installation details

## 6.1 Hardware switches

**Non Intrinsically Safe; Output code A**

The electronics are equipped with four user-selectable hardware switches. These switches set the Alarm Mode, Internal/External Analog Power, Transmitter Security, and Internal/External Pulse Power.

**Intrinsically Safe; Output code B**

The electronics are equipped with two user-selectable hardware switches. These switches set the Alarm Mode and Transmitter Security. The Analog Power and Pulse Power are internally set and only available as External.

### 6.1.1 Alarm mode

If an event occurs that would trigger an alarm in the electronics, the analog output will be driven high or low, depending on the switch position. The switch is set in the HIGH position when shipped from the factory. Refer to Table 8-1 and Table 8-2 for analog output values of the alarm.

### 6.1.2 Transmitter security

The **SECURITY** switch allows the user to lock out any configuration changes attempted on the transmitter.

- When the security switch is in the **ON** position, the configuration can be viewed but no changes can be made.
- When the security switch is in the **OFF** position, the configuration can be viewed and changes can be made.

The switch is in the **OFF** position when the transmitter is shipped from the factory.

**Note**
The flow rate indication and totalizer functions remain active when the **SECURITY** switch is in either position.

### 6.1.3 Internal/external analog power (Output option code A)

**Note**
With output option code B, the analog output can only be externally powered and there is no **ANALOG** switch.

The 4–20 mA loop can be powered internally by the transmitter or externally by an external power supply. The **ANALOG** switch determines the source of the 4–20 mA loop power.

- When the switch is in the **INTERNAL** position, the 4–20 mA loop is powered internally by the transmitter.
- When the switch is in the **EXTERNAL** position, a 10-30 VDC external power supply is required. For more information about 4–20 mA external power, see Analog output.

The switch is in the **INTERNAL** position when the transmitter is shipped from the factory.

**Note**
External power is required for multidrop configurations.

## 6.1.4 Internal/external pulse power (Output option code A)

**Note**
With output option code B, the pulse output can only be externally powered and there is no **PULSE** switch.

The pulse loop can be powered internally by the transmitter or externally or by an external power supply. The **PULSE** switch determines the source of the pulse loop power.

- When the switch is in the **INTERNAL** position, the pulse loop is powered internally by the transmitter.
- When the switch is in the **EXTERNAL** position, a 5–28 VDC external supply is required. For more information about pulse external power, see Connect pulse output.

The switch is in the **EXTERNAL** position when the transmitter is shipped from the factory.

## 6.1.5 Changing hardware switch settings

**Note**
The hardware switches are located on the top side of the electronics board and changing their settings requires opening the electronics housing. If possible, carry out these procedures away from the plant environment in order to protect the electronics.

**Figure 6-1: Electronics stack and hardware switches**



### Prerequisites

**Note**
Review safety information in Safety messages before accessing the transmitter electronics.

### Procedure

1. Place the control loop into manual control.
2. Disconnect power to the transmitter
3. Open the electronics compartment cover.
4. Identify the location of each switch (see Figure 6-1 ).
5. Change the setting of the desired switches with a small, non-metallic tool.
6. Close the electronics compartment cover. See Powering the transmitter for details on the covers.
7. Return power to the transmitter and verify the flow measurement is correct.
8. Return the control loop to automatic control.

## 6.2 Pulse output and discrete input/outputs

There are three additional loop connections available on the Transmitter:

- Pulse output - used for external or remote totalization (see Pulse output).
- Discrete I/O Channel 1 can be configured as discrete input or discrete output (see Discrete input/output).
- Discrete I/O Channel 2 can be configured as discrete output only (see Discrete input/output).

### 6.2.1 Connect pulse output

The pulse output function provides a galvanically isolated frequency signal that is proportional to the flow through the sensor. The signal is typically used in conjunction with an external totalizer or control system.

**Note**

- With output option code A, the pulse output can be internally or externally powered, and the **PULSE** switch must be set accordingly (the default setting is **EXTERNAL**).
- With output option code B, the pulse output can only be externally powered and there is no **PULSE** switch. See Internal/external pulse power (Output option code A).

#### External power supply

For an externally powered pulse output, the following requirements apply:

- Supply voltage: 5 to 28 VDC
- Maximum current: 100 mA
- Maximum power: 1.0 W
- Load resistance: 200 to 10k Ohms (typical value 1k Ohms). Refer to the figure indicated:

| Output option code | Supply voltage | Resistance vs cable length |
|---|---|---|
| A | 5-28 VDC | See Figure 6-2 |
| B | 5 VDC | See Figure 6-3 |

| Output option code | Supply voltage | Resistance vs cable length |
|---|---|---|
| B | 12 VDC | See Figure 6-4 |
| B | 24 VDC | See Figure 6-5 |

- Pulse mode: Fixed pulse width or 50% duty cycle
- Pulse duration: 0.1 to 650 ms (adjustable)
- Maximum pulse frequency:
  - Output option code A is 10,000 Hz
  - Output option code B is 5000 Hz
- FET switch closure: solid state switch

**Figure 6-2: Output Option Code A—Maximum Frequency vs. Cable Length**

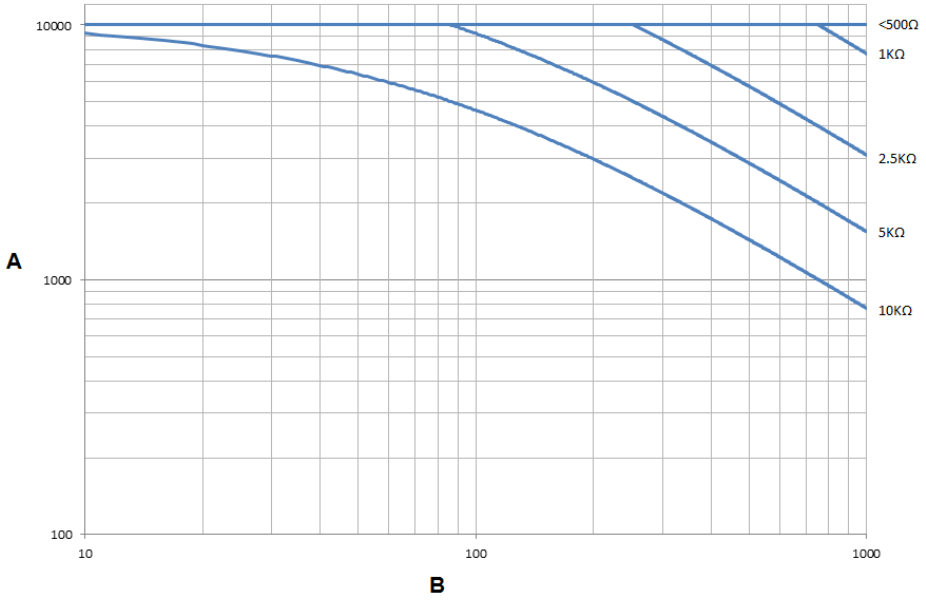


*A. Frequency (Hz)*
*B. Cable length (feet)*

**Figure 6-3: Output Option Code B—VDC Supply**

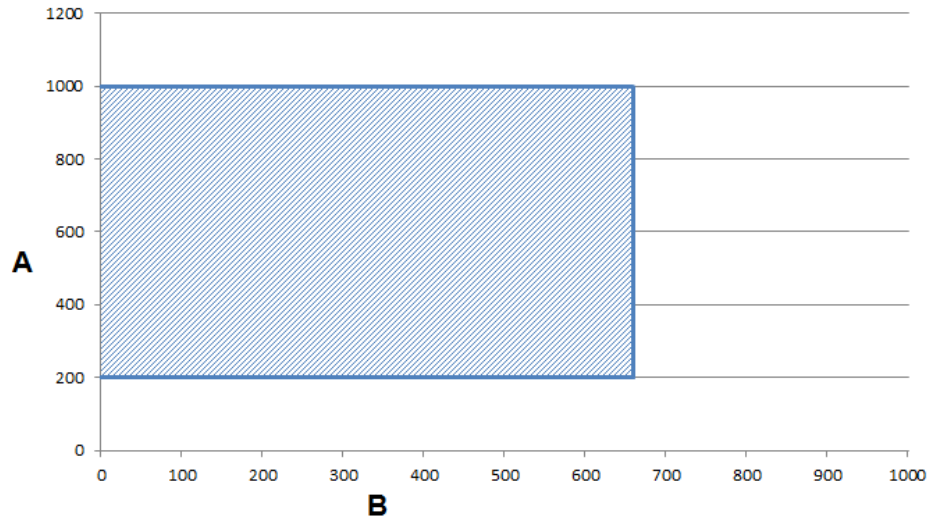


*A. Resistance (Ω)*
*B. Cable length (feet)*

At 5000 Hz operation with a 5 VDC supply, pull-up resistances of 200 to 1000 Ohms allow cable lengths up to 660 ft (200 m).

**Figure 6-4: Output Option Code B—2 VDC Supply**

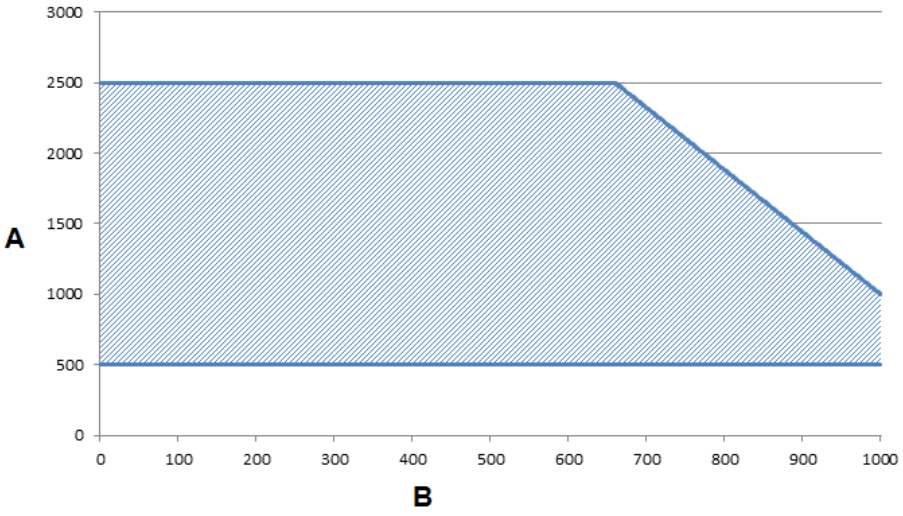


*A. Resistance (Ω)*
*B. Cable length (feet)*

At 5000 Hz operation with a 12 VDC supply, pull-up resistances of 500 to 2500 Ohms allow cable lengths up to 660 ft (200 m). Resistances from 500 to 1000 Ohms allow a cable length of 1000 ft (330 m).

**Figure 6-5: Output Option Code B—24 VDC Supply**

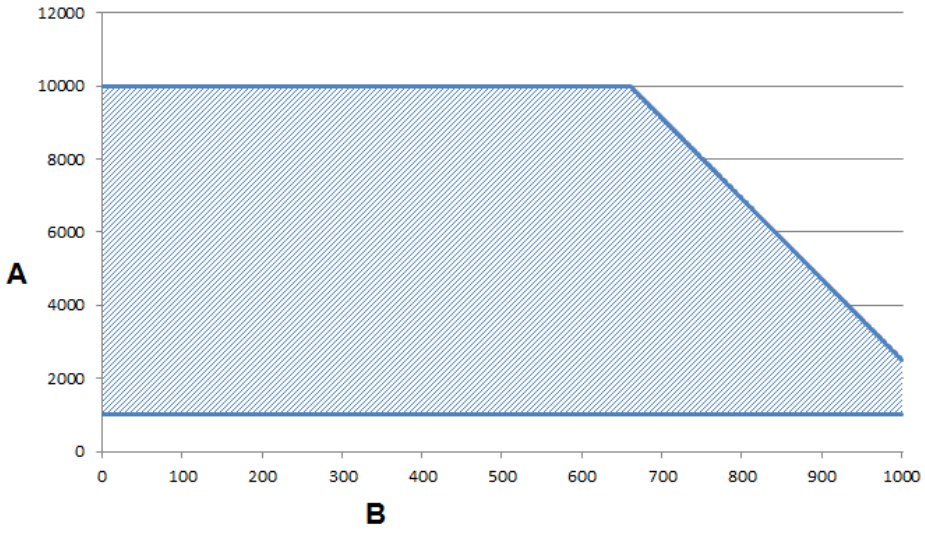


*A. Resistance (Ω)*
*B. Cable length (feet)*

At 5000 Hz operation with a 24 VDC supply, pull-up resistances of 1000 to 10,000 Ohms allow cable lengths up to 660 ft (200 m). Resistances from 1000 to 2500 Ohms allow a cable length of 1000 ft (330 m).

## Connecting an external power supply

**Note**
Total loop impedance must be sufficient to keep loop current below maximum rating. A resistor can be added in the loop to raise impedance.

**Figure 6-6: Connecting an electromechanical totalizer/counter with external power supply**

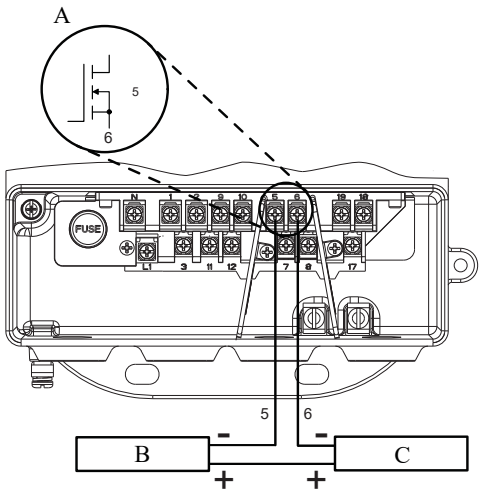


*A. Schematic showing FET between terminal 5 and 6*
*B. Electro-mechanical counter*
*C. 5–24 VDC power supply*

**Figure 6-7: Connecting to an electronic totalizer/counter with external power supply**

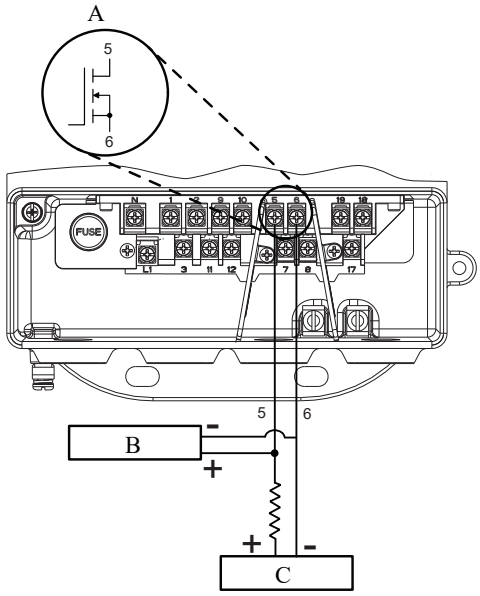


*A. Schematic showing FET between terminal 5 and 6*
*B. Electronic counter*
*C. 5–24 VDC power supply*

## Procedure

1. Ensure the power source and connecting cable meet the requirements outlined previously.

2. Turn off the transmitter and pulse output power sources.
3. Run the power cable to the transmitter.
4. Connect - DC to terminal 6.
5. Connect + DC to terminal 5.

### Internal power supply

For an internally powered pulse output, the supply voltage from the transmitter can be up to 12 VDC. Connect the transmitter directly to the counter as shown. Internal pulse power can only be used with an electronic totalizer or counter and cannot be used with an electromechanical counter.

**Figure 6-8: Connecting to an electronic totalizer/counter with internal power supply**

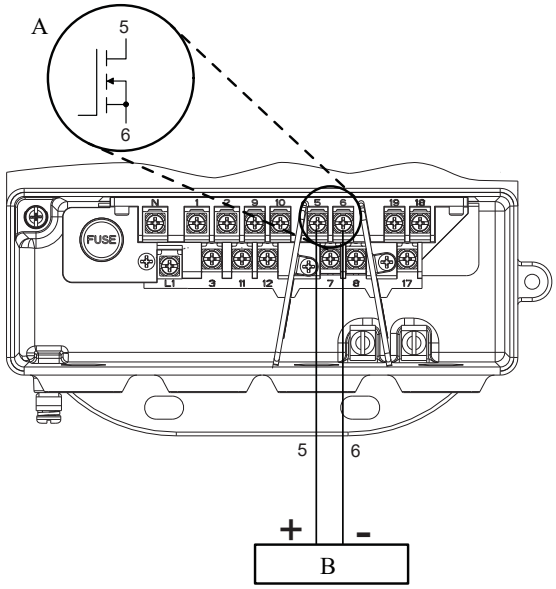


*A. Schematic showing FET between terminal 5 and 6*
*B. Electronic counter*

**Procedure**

1. Turn off the transmitter.
2. Connect wires from the counter to the transmitter as shown.

## 6.2.2 Connect discrete output

The discrete output control function can be configured to drive an external signal to indicate zero flow, reverse flow, empty pipe, diagnostic status, flow limit, or transmitter status. The following requirements apply:

- Supply Voltage: 5 to 28 VDC
- Maximum Voltage: 28 VDC at 240 mA
- Switch Closure: solid state relay

**Figure 6-9: Connect discrete output to relay or control system input**

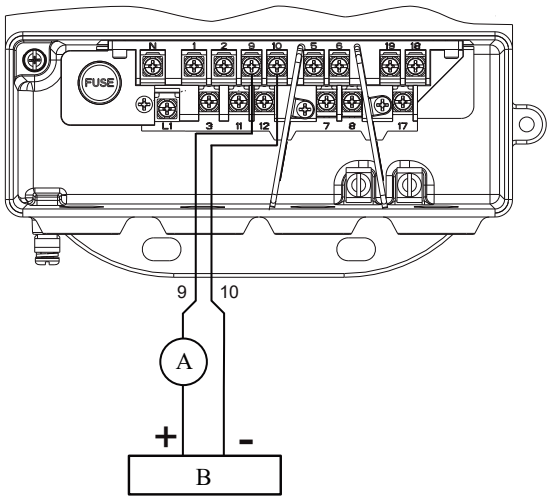


*A. Control relay or input*
*B. 5–28 VDC power supply*

**Note**
Total loop impedance must be sufficient to keep loop current below maximum current rating. A resistor can be added in the loop to raise impedance.

For discrete output control, connect the power source and control relay to the transmitter. To connect external power for discrete output control, complete the following steps:

**Procedure**

1. Ensure the power source and connecting cable meet the requirements outlined previously.
2. Turn off the transmitter and discrete power sources.
3. Run the power cable to the transmitter.
4. Channel 1: Connect +DC to terminal 11, connect –DC to terminal 12.
5. Channel 2: Connect +DC to terminal 9, connect –DC to terminal 10.

## 6.2.3 Connect discrete input

- For HART version 5.4 firmware, the discrete input can provide positive zero return (PZR) or net totalizer reset.
- For HART version 5.5 or 7.1 firmware, the discrete input can provide positive zero return (PZR) or reset totalizer (A, B, C, or all totals).

  **Note**
  If a particular totalizer is configured to be not resettable, the totalizer will not be reset with this function.

The following requirements apply:

- Supply voltage: 5 VDC to 28 VDC
- Current: 1.5 mA to 20 mA
- Input Impedance: 2.5 k plus 1.2 V diode drop. See Figure 6-11.

**Figure 6-10: Connecting Discrete Input**

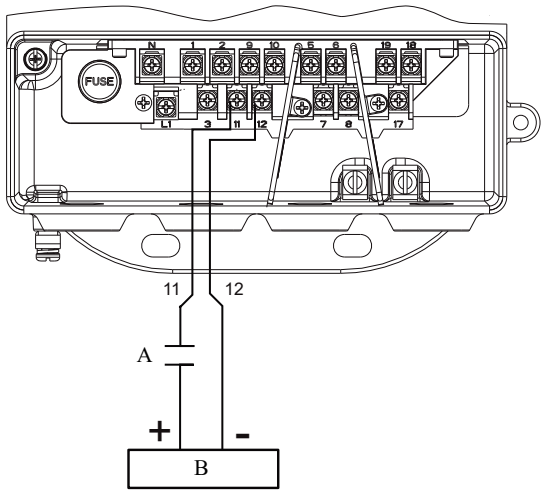


*A. Relay contactor control system output*
*B. 5–28 VDC power supply*

**Figure 6-11: Discrete Input Operating Range**

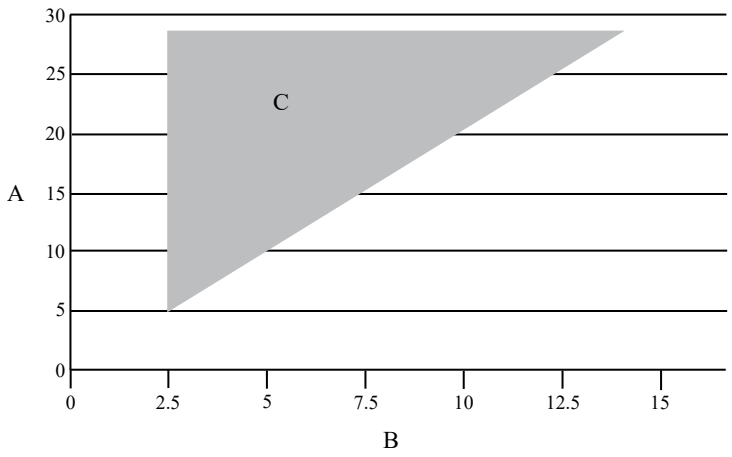


*A. Supply voltage*
*B. series resistance $\Omega_{in}$ + $\Omega_{ext}$ (KΩ)*

To connect the discrete input, complete the following steps.

**Procedure**

1. Ensure the power source and connecting cable meet the requirements outlined previously.
2. Turn off the transmitter and discrete power sources.
3. Run the power cable to the transmitter.
4. Connect +DC to terminal 11.
5. Connect –DC to terminal 12.

# 6.3 Coil housing configuration

The coil housing provides physical protection of the coils and other internal components from contamination and physical damage that might occur in an industrial environment. The coil housing is an all-welded and gasket-free design.

The 8705 model is available in four coil housing configurations. Configurations are identified by the M0, M1, M2, or M4 options codes found in the model number. The 8711 and 8721 models are only available in one coil housing coil configuration; a separate option code is not available.

## 6.3.1 Standard coil housing configuration

The standard coil housing configuration is a factory sealed all-welded enclosure and is available for the following models (see Figure 6-12):

- 8705 with option code M0 - 8705xxxxxxxxM0
- 8711 with option code M/L - 8711xxxxxxM/L
- 8721 with option code R/U - 8721xxxxxxR/U

**Figure 6-12: Standard Housing Configuration (8705 Shown)**

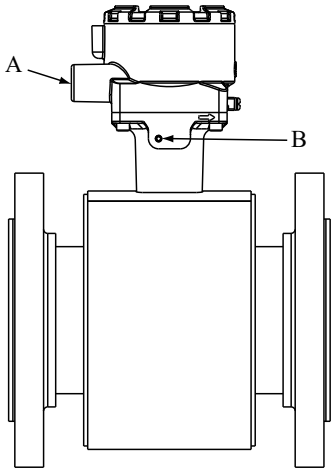


*A. Conduit connection*
*B. No relief port (welded shut or absent)*

## 6.3.2 Process leak protection (option M1)

The sensor is available with process leak detection through the use of a threaded connection and pressure relief valve (PRV). This coil housing configuration is a factory sealed all-welded enclosure. The M1 configuration is available for the 8705 only.

- 8705 with option code M1 - 8705xxxxxxxxM1

A PRV can be installed in the threaded connection to prevent possible over-pressuring of the coil housing caused by a primary seal failure. The PRV is capable of venting fugitive emissions when pressure inside the coil housing exceeds five psi. Additional piping may be connected to the PRV to drain any process leakage to a safe location (see Figure 6-13).

In the event of a primary seal failure, this configuration will not protect the coils or other internal components of the sensor from exposure to the process fluid.

**Note**
The PRV is supplied with the meter to be installed by the customer. Installation of the PRV and any associated piping must be performed in accordance with environmental and hazardous area requirements.

**Figure 6-13: Sensor with M1 Coil Housing Configuration and PRV**

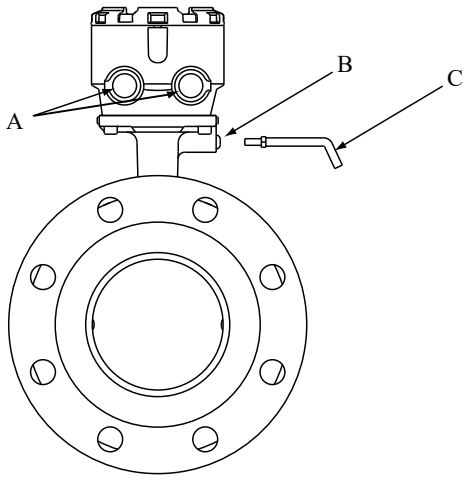


*A. Conduit connection*
*B. M6 threaded pressure relief port with removable cap screw*
*C. Optional: Use relief port to plumb to safe area (supplied by user).*

## 6.3.3 Process leak containment (Option M2 or M4)

The sensor is available with process leak containment. The coil housing configuration is a factory sealed all-welded enclosure with the addition of sealed electrode compartments. The M2/M4 configuration is available for the 8705 only.

- 8705 with option code M2/M4 - 8705xxxxxxxxM2/M4

This configuration divides the coil housing into separate compartments, one for each electrode and one for the coils. In the event of a primary seal failure, the fluid is contained in the electrode compartment. The sealed electrode compartment prevents the process fluid from entering the coil compartment where it may damage the coils and other internal components. The electrode compartments are designed to contain the process fluid up to a maximum pressure of 740 psig.

- Code M2 - sealed, welded coil housing with separate sealed and welded electrode compartments (see Figure 6-14).
- Code M4 - sealed, welded coil housing with separate sealed and welded electrode compartments with a threaded port on the electrode tunnel cap, capable of venting fugitive emissions (see Figure 6-15).

**Note**
To properly vent process fluid from the electrode compartment to a safe location, additional piping is required and must be installed by the user. Installation of any associated piping must be performed in accordance with environmental and hazardous

area requirements. In the event of primary seal failure, the electrode compartment may be pressurized. Use caution when removing the cap screw.

**Figure 6-14: Sensor with M2 Coil Housing Configuration**

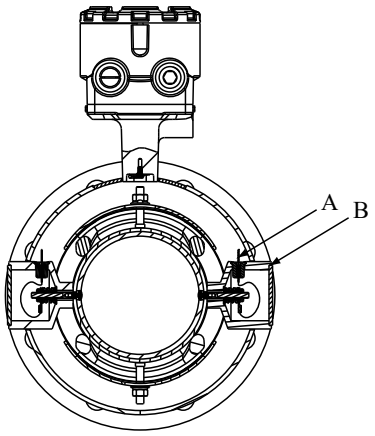


*A. 2x fused glass seal*
*B. 2x sealed electrode compartment*

**Figure 6-15: Sensor with M4 Coil Housing Configuration**

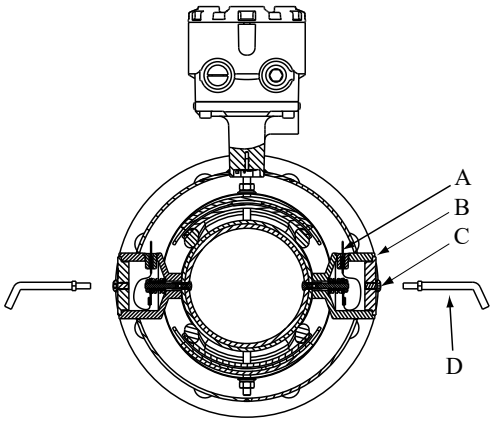


*A. 2x fused glass seal*
*B. 2x sealed electrode compartment*
*C. M6 threaded pressure relief port with removable cap screw*
*D. Optional: Use relief port to plumb to safe area (supplied by user).*

## 6.3.4 Higher temperature applications and sensor insulation best practices

Insulation of the magnetic flowmeter sensor is not typically recommended. However, in applications with higher temperature process fluids (above 150°F / 65°C), plant safety, sensor reliability, and sensor longevity can be improved with careful attention to proper insulation.

### Procedure

1. In applications where process fluid permeation of the liner has been observed or may be expected, the rate of permeation can be reduced by decreasing the temperature gradient between the process fluid and the outside of the meter body. In these applications only the space between the process flanges and the coil housing should be insulated (see Figure 6-16).

**Figure 6-16: Insulating a Rosemount Magnetic Flowmeter for Permeation**

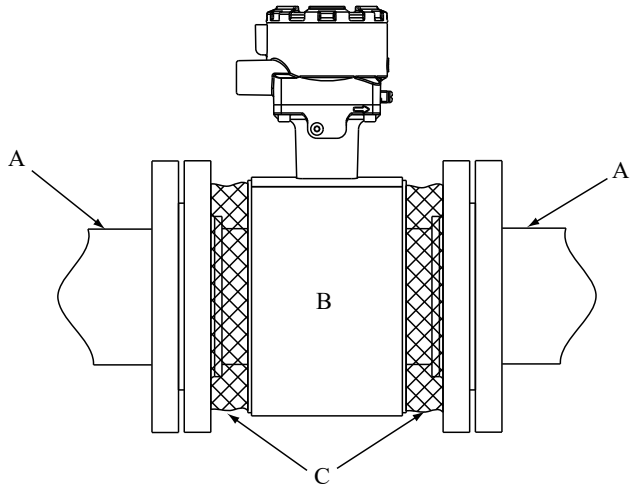


*A. Process piping*
*B. Coil housing*
*C. Insulation*

2. When insulation of the magnetic flowmeter sensor is required due to plant safety standards designed to protect personnel from contact burns, extend the insulation up to the coil housing, covering both ends of the sensor and flanges (Figure 6-17).

   The insulation should NOT cover the coil housing or the terminal junction box. Insulating the coil housing and the terminal junction box can result in overheating of the coil compartment and terminals, resulting in erratic/erroneous flow readings and potential damage or failure of the meter.

**Figure 6-17: Insulating a Rosemount Magnetic Flowmeter for Safety/Plant Standards**

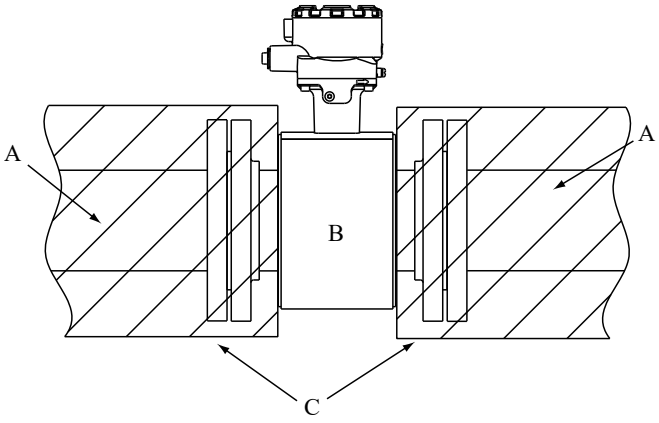


*A. Process piping*
*B. Coil housing*
*C. Insulation*

# 7 Operation

## 7.1 Introduction

The transmitter features a full range of software functions, transmitter configurations, and diagnostic settings. These features can be accessed through the Local Operator Interface (LOI), a Field Communicator, AMS® Device Manager, ProLink III software, or a host control system. Configuration variables may be changed at any time; specific instructions are provided through on-screen instructions.

This section covers the basic features of the LOI (optional) and provides general instructions on how to navigate the configuration menus using the buttons. The section also covers the use of a Field Communicator and provides menu trees to access each function. For detailed LOI configuration refer to Configure LOI/Display.

## 7.2 Local operator interface (LOI)

The optional LOI provides a communications center for the transmitter.

The LOI allows an operator to:

- Change transmitter configuration
- View flow and totalizer values
- Start/stop and reset totalizer values
- Run diagnostics and view the results
- Monitor transmitter status

### 7.2.1 Basic features

The basic features of the LOI include totalizer control, diagnostics, basic config, and menu navigation. These features provide control of all transmitter functions.

**Figure 7-1: Local Operator Interface and Character Display**

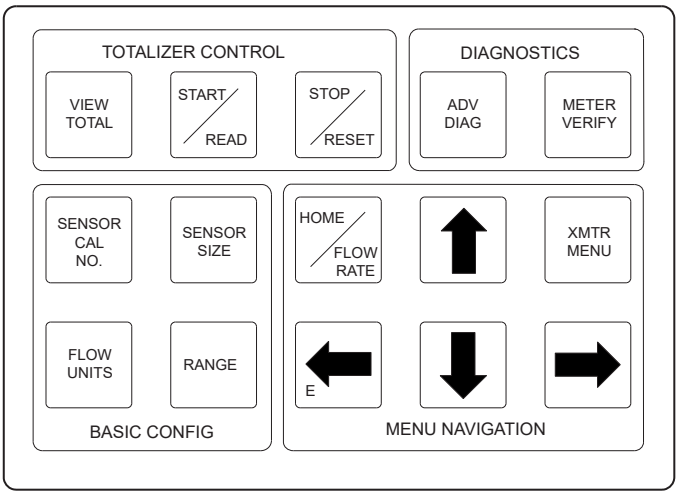

**Totalizer Control**

The totalizer control buttons enable you to view, start, stop, read, and reset the totalizer.




—**VIEW TOTAL**. Scroll through the totalizer values in aphabetical order (Totalizer A, Totalizer B, Totalizer C).




—**START/READ**. This functionality applies to the currently displayed totalizer value.

- If the totalizers are not running, pressing this button starts ALL totalizers counting.
- If the totalizers are running, pressing this button pauses the display, enabling the user to read the total value. It does NOT stop the totalizer value from accumulating in the background. Pressing the button while the display is paused returns the display to the accumulating totalizer value




—**STOP/RESET**. This functionality applies to the currently displayed totalizer value.

- If the totalizers are running, pressing this button stops ALL totalizers from accumulating.
- If the totalizer is stopped, pressing this button resets the total value to a value of zero.

**Note**
If you attempt to reset the totalizer from the LOI when it is configured as non-resetable from the LOI, a notification appears.

**Diagnostics**

The diagnostics buttons provide direct access to the advanced diagnostic functions of the transmitter and meter verification.




—**ADV DIAG**. Access the advanced diagnostic menu.




—**METER VERIFY**. Run Meter Verification.

**Basic Config**

The basic config buttons provide direct access to the most common transmitter parameters.




—**SENSOR CAL NO**. Access the sensor calibration number parameter. Press ⬆, ⬇, and ➡ to modify the sensor calibration number. Press ⬅ to store the new value as the sensor calibration number.




—**SENSOR SIZE**. Access the Line Size parameter. Press ⬆ or ⬇ to select the sensor line size. Press ➡ to increment the line size. Press ⬅ to store the new value as the sensor line size.

FLOW UNITS —**FLOW UNITS**. Access the Flow Units parameter. Press ⬆ or ⬇ to select the flow units. Press ➡ to increment the flow units. Press ⬅ will store the selection.

RANGE —**RANGE**. Access the PV URV parameter. Press ⬆, ⬇, and ➡ to modify the upper range value. Press ⬅ to store the new value as the PV Upper Range Value.

**Menu Navigation**

The menu navigation buttons enable you to move the display cursor, incrementally increase the value, enter the selected value, display the home screen, or access the transmitter menu.

HOME / FLOW RATE —**HOME/FLOW RATE**. Access the flow rate display screen.

XMTR MENU —**XMTR MENU**. Access the transmitter menu structure.

⬆ —(Up). Increment a numerical or list value.

⬅ E —(Left) or **E**. Back out or enter/store parameters to the transmitter memory.

⬇ —(Down). Decrement a numerical or list value.

➡ —(Right). Highlight a numerical or text character, or increment a list value.

Press **XMTR MENU** to access the menu. Use ⬆, ⬇, ⬅, and ➡ to navigate the menu structure. A map of the LOI menu structure is shown in LOI Menu trees.

## 7.2.2 Data entry

The LOI keypad does not have alphanumeric keys. Alphanumeric and symbolic data is entered by the following procedure. Use the steps below to access the appropriate functions.

### Procedure

1. Use ⬆, ⬇, ⬅, and ➡ to navigate the menu (LOI Menu trees) and access the appropriate alphanumeric parameter.
2. Use ⬆, ⬇ or ➡ to begin editing the parameter.
   - Press ⬅ to go back without changing the value.
   - For numerical data, scroll through the digits 0-9, decimal point, and dash.
   - For alphabetical data, scroll through the letters of the alphabet A-Z, digits 0-9, and the symbols ?, &, +, -, *, /, $, @,%, and the blank space.
3. Use ➡ to highlight each character you want to change and then use ⬆ and ⬇ to select the value.

If you go past a character that you wish to change, keep using ➡ to wrap around and arrive at the character you want to change.

4. Press ⬅ when all changes are complete to save the entered values.
5. Press ⬅ again to navigate back to the menu tree.

## 7.2.3 Data entry examples

Parameter values are classified as *table values* or *select values*.

**Table values** They are available from a predefined list for parameters such as line size or flow units.

**Select values** Integers, floating point numbers, or character strings that are entered one character at a time using the arrow keys for parameters such as PV URV and calibration number.

### Table value example

Setting the sensor size:

#### Procedure

1. Press **XMTR MENU** to access the menu. See LOI Menu trees.
2. Use ⬆, ⬇, ⬅, and ➡ to select line size from the basic setup menu.
3. Use ⬆ or ⬇ to increase/decrease the sensor size.
4. When you reach the desired sensor size, press ⬅.
5. Set the loop to manual if necessary, and press ⬅ again.

After a moment, the LOI will display `VALUE STORED SUCCESSFULLY` and then display the selected value.

### Select value example

Changing the upper range limit:

#### Procedure

1. Press **XMTR MENU** to access the menu. See LOI Menu trees.
2. Use ⬆, ⬇, ⬅, and ➡ to select **PV URV** from the basic setup menu.
3. Press ➡ to position the cursor.
4. Press ⬆ or ⬇ to set the number.
5. Repeat Step 3 and Step 4 until desired number is displayed, press ⬅.
6. Set the loop to manual if necessary, and press ⬅ again.

After a moment, the LOI will display `VALUE STORED SUCCESSFULLY` and then display the selected value.

## 7.2.4 Totalizer functionality

### Totalizer selection

#### Procedure

- To view the totalizer values, press **VIEW TOTAL**.

See Totalizer for more information on the totalizer functionality.

### Start all / Stop all

Totalizers can be started or stopped simultaneously. See Totalizer. They cannot be started and stopped individually.

### Reset totalizer

The totalizers can be configured to be reset through the LOI. They can be reset individually, or simultaneously through a global command. For details on configuring the reset functionality and on resetting the totalizers, refer to Totalizer.

## 7.2.5 Display lock

The transmitter has display lock functionality to prevent unintentional configuration changes. The display can be locked manually or configured to automatically lock after a set period of time. When locked, the LOI will display the flow screen.

### Manual display lock

To activate, hold the `UP` arrow for 3 seconds and follow the on-screen instructions. When the display lock is activated, a lock symbol will appear in the lower right hand corner of the display. To deactivate, hold the `UP` arrow for 3 seconds and follow the on-screen instructions. When the display lock is deactivated, the lock symbol will no longer appear in the lower right hand corner of the display.

### Auto display lock

The transmitter can be configured to automatically lock the LOI. Follow the instructions below to access configuration.

#### Procedure

1. Press **XMTR MENU** to access the menu. See LOI Menu trees.
2. Scroll to and select **LOI Config** from the Detailed Setup menu.
3. Press ⬇ to highlight **Disp Auto Lock** and press ➡ to enter the menu.
4. Press ⬆ or ⬇ to select the auto lock time.
5. When you reach the desired time, press ⬅.
6. Set the loop to manual if necessary, and press ⬅.

After a moment, the LOI will display `VALUE STORED SUCCESSFULLY` and then display the selected value.

## 7.2.6 Security

The transmitter uses two types of protection to prevent users from making changes to the transmitter configuration. Only one security setting is needed to be ON to prevent changes, both security settings need to be OFF to allow changes.

#### Write protect

Read-only informational variable that reflects the setting of the hardware security switch. If Write Protect is ON, configuration data are protected and cannot be changed from the LOI , a HART-based communicator or control system. If Write Protect is OFF, configuration data may be changed.

#### HART Lock (HART 7 only)

This variable reflects the setting of the software security. It can be set to Temporary (turned off by power cycle or Device Reset) or Permanent Lock. If HART Lock is ON, configuration data are protected and cannot be changed from the LOI or a HART-based communicator or control system. If HART Lock is OFF, configuration data may be changed.

## 7.2.7 Locate device

For HART 7 devices with LCD displays, enabling Locate Device displays the characters "0-0-0-0-0-0-0-0-" on the LCD display. This allows for easy field identification of the device during commissioning or service.

## 7.2.8 Diagnostic messages

Diagnostic messages may appear on the LOI. See Advanced Diagnostics Configuration for a complete list of messages, potential causes, and corrective actions for these messages.

## 7.2.9 Display symbols

When certain transmitter functions are active, a symbol will appear in the lower-right corner of the display. The possible symbols include the following:

| | |
|---|---|
| Display Lock |  |
| Totalizer |  |
| Reverse flow | R |
| Continuous meter verification |  |

## 7.2.10 LOI Menu trees

**Figure 7-2: LOI menu tree for HART rev 5.5 and HART rev 7.1, part 1**

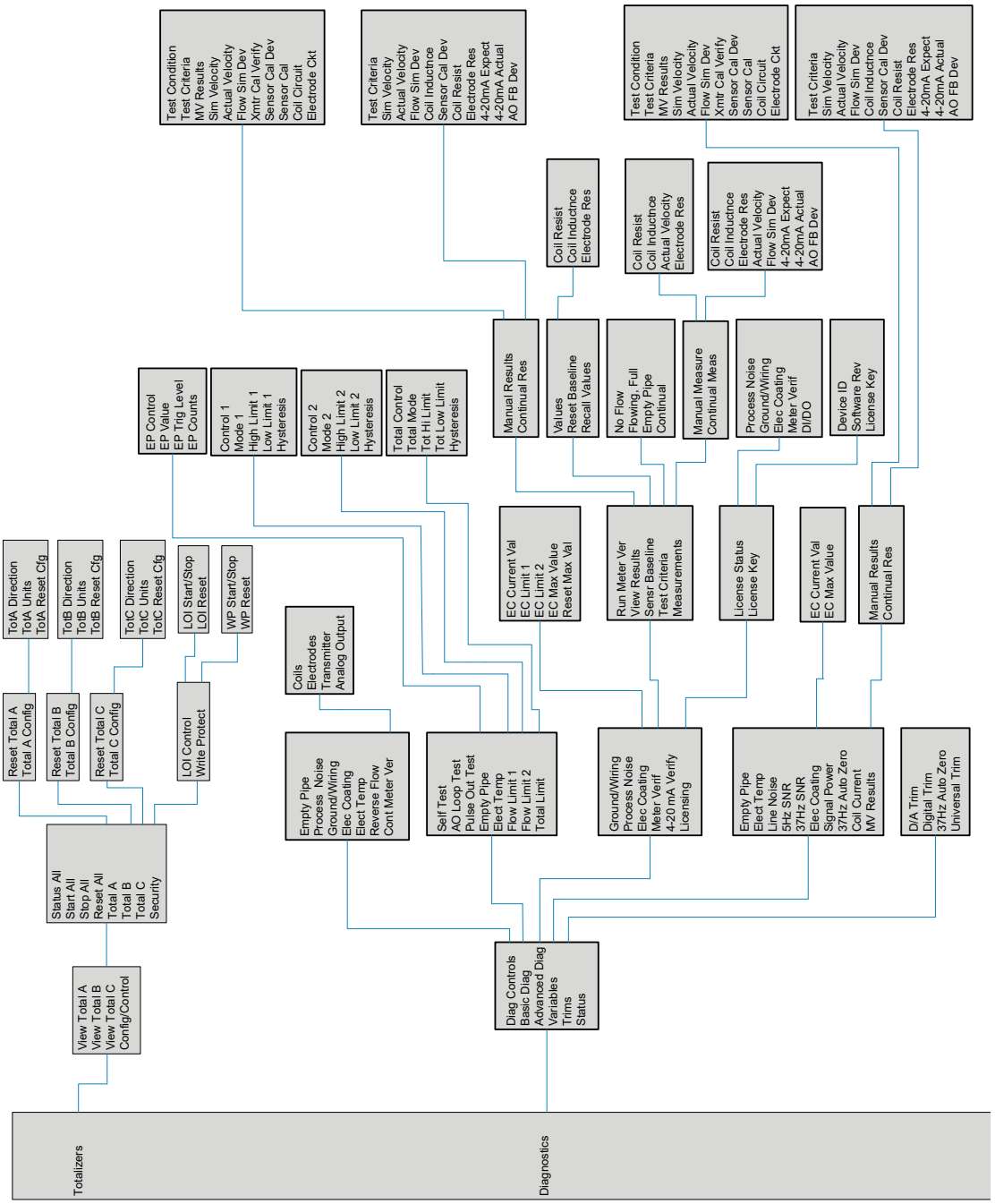

**Figure 7-3: LOI menu tree for HART rev 5.5 and HART rev 7.1, part 2**

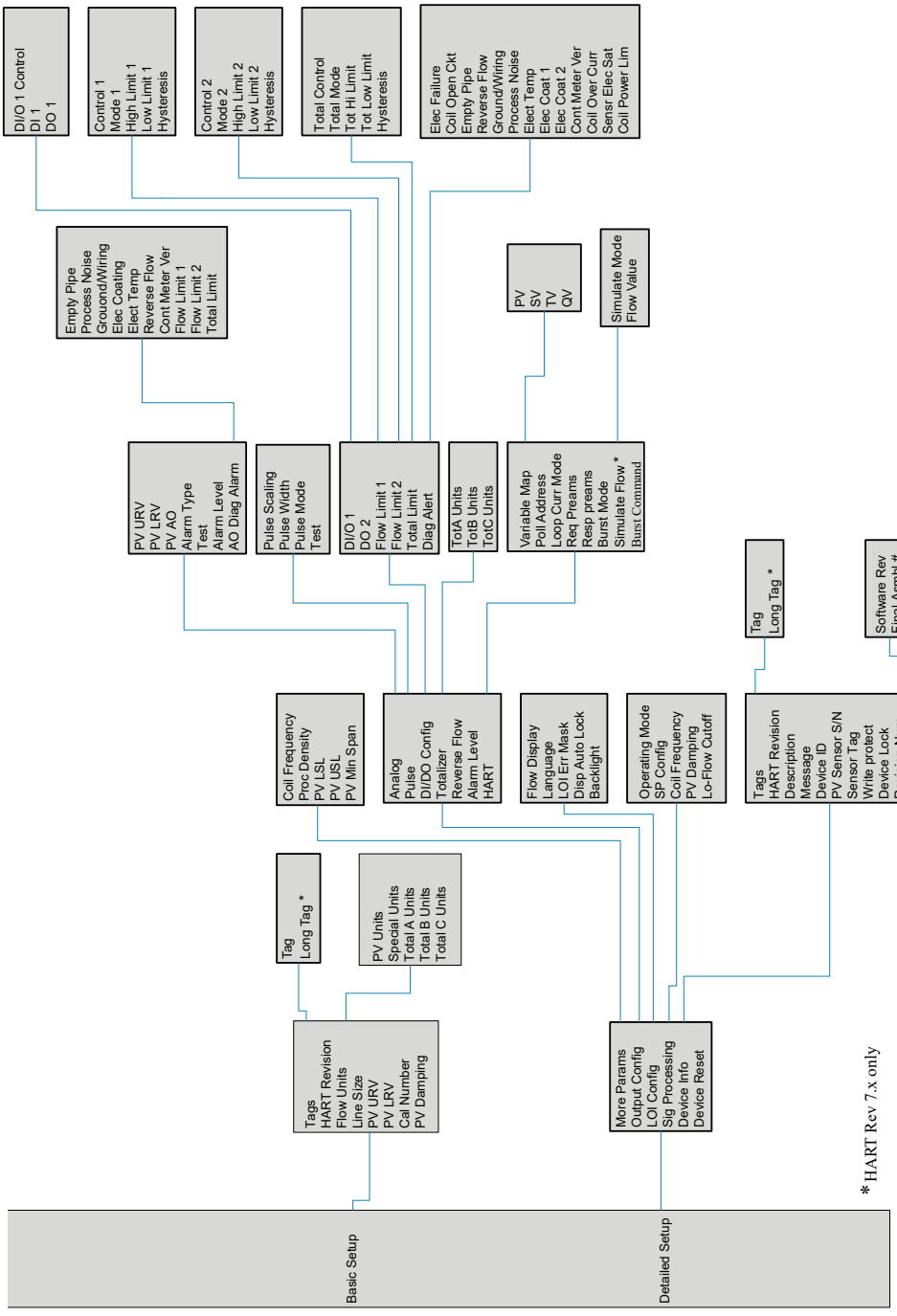


# 7.3 Field Communicator interface

The transmitter can be configured with a Field Communicator using HART® Protocol gaining access to the software functions, transmitter configurations, and diagnostic

settings. Refer to the Field Communicator Manual for detailed instructions on how to connect to the device.

### 7.3.1 Field Communicator user interface

The device driver uses conditional formatting menus. If the diagnostic is not active, the diagnostic will not be displayed as a menu item in the Field Communicator, and menu trees will be resequenced accordingly.

The device dashboard interface is shown in Figure 7-4. The corresponding menu trees are shown in Field Communicator menu trees .

**Figure 7-4: Device Dashboard Interface**

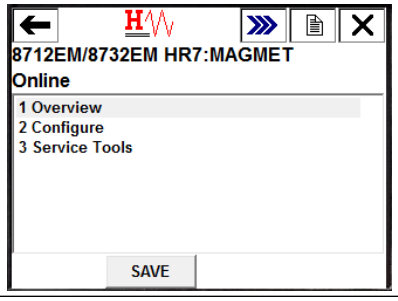

## 7.3.2 Field Communicator menu trees

**Figure 7-5: Field Communicator Dashboard Menu Tree (HART v5.5, part 1)**

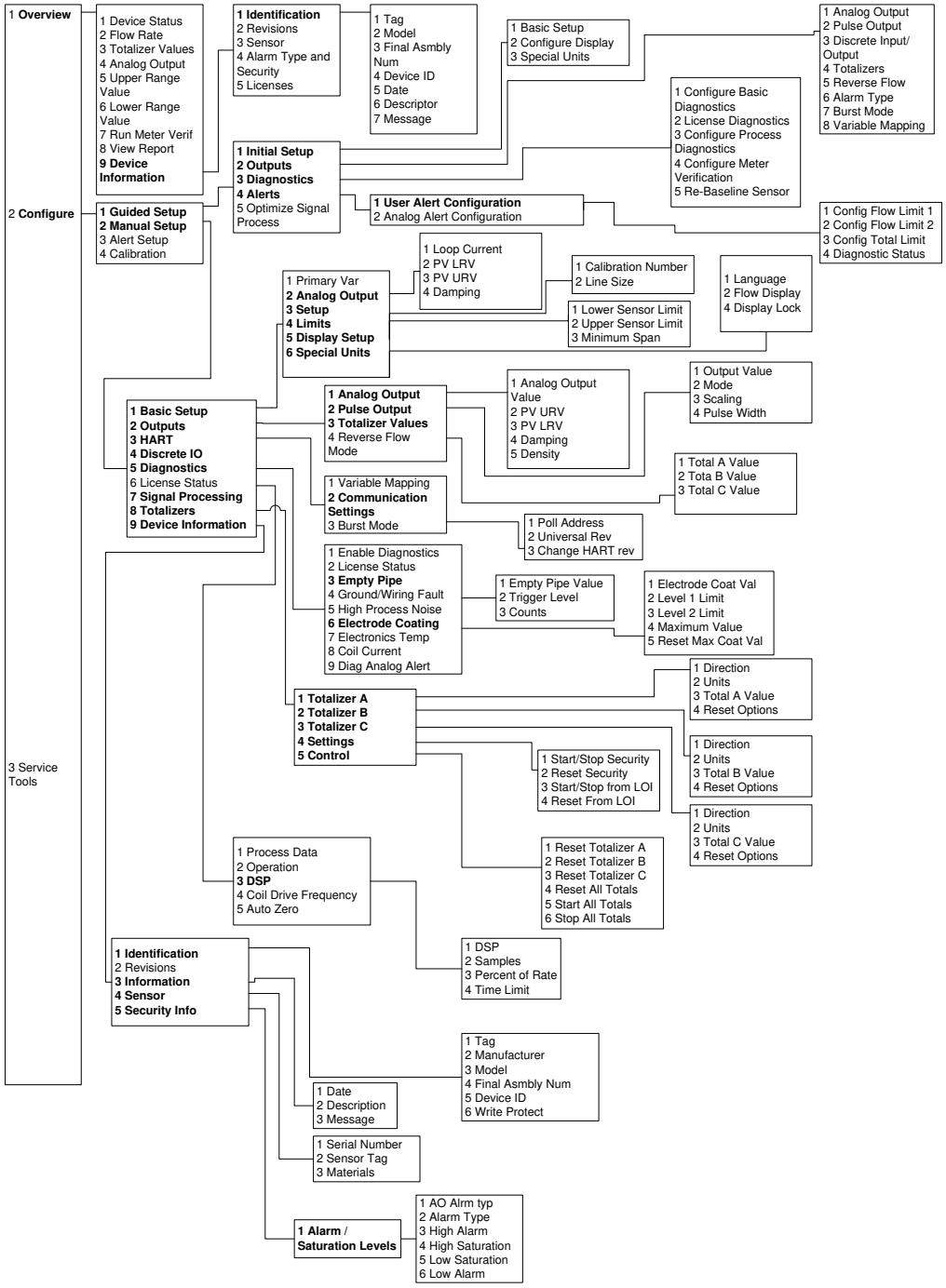

## Figure 7-6: Field Communicator Dashboard Menu Tree (HART v5.5, part 2)

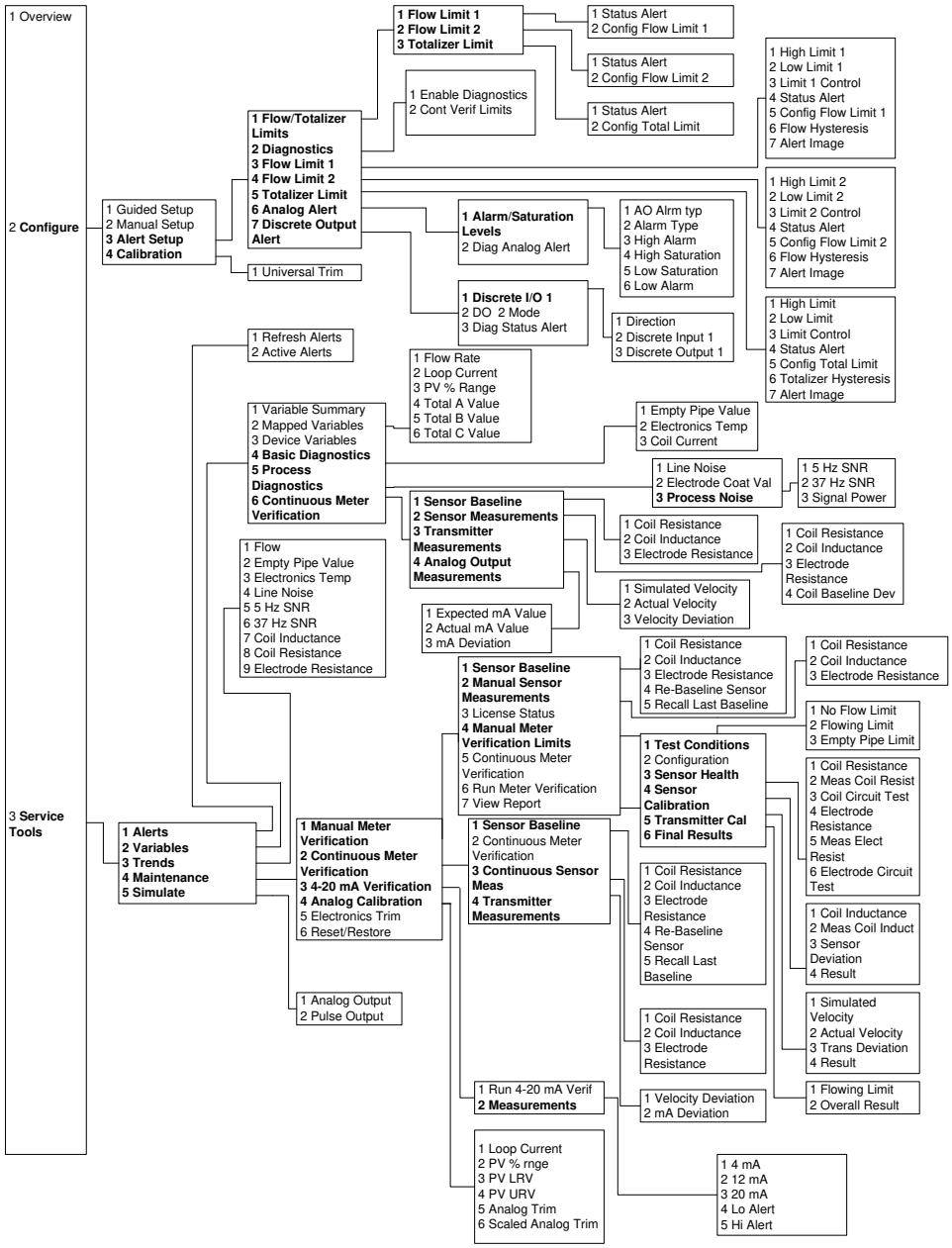

## Figure 7-7: Field Communicator Dashboard Menu Tree for HART rev 7.1, part 1

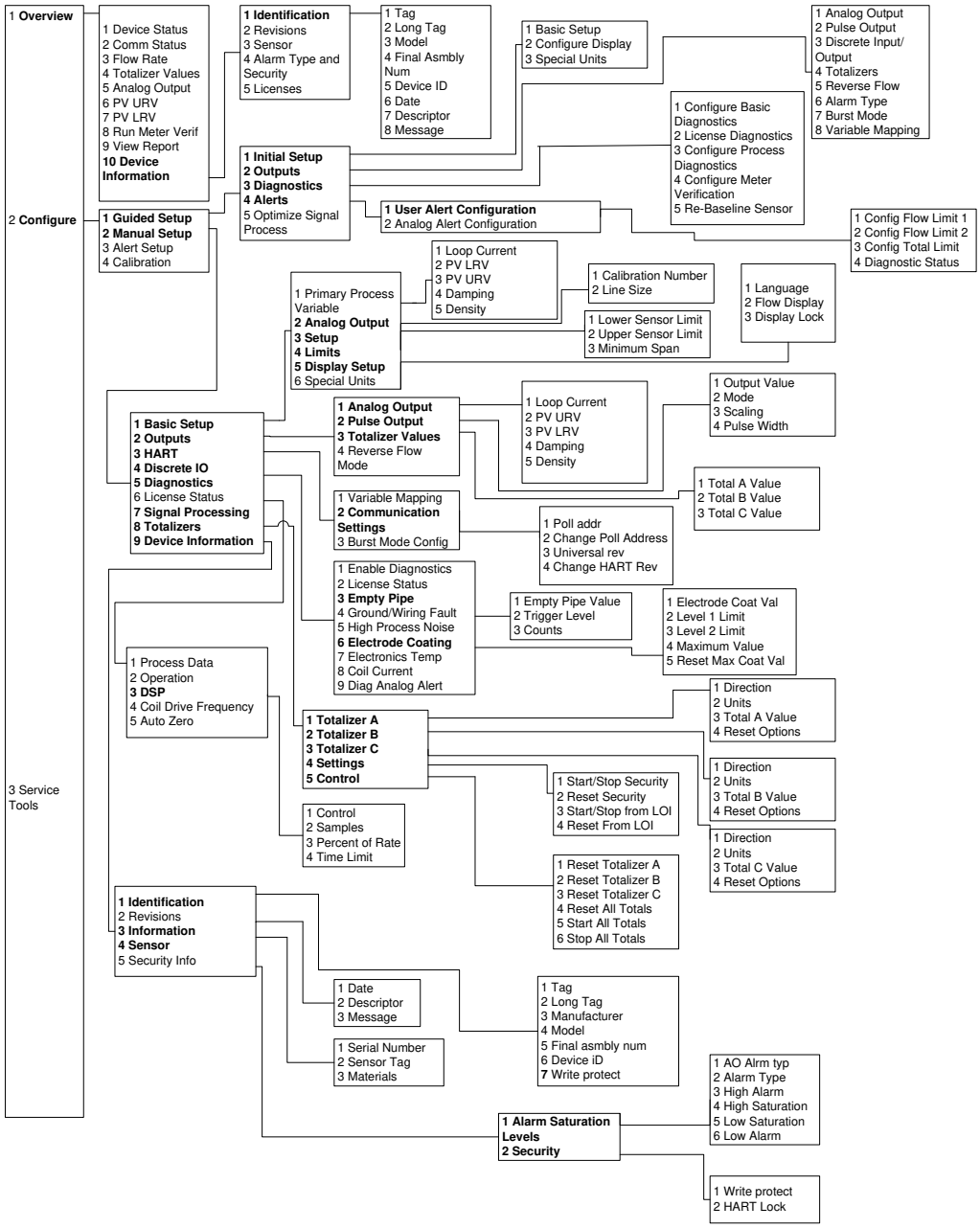

## Figure 7-8: Field Communicator Dashboard Menu Tree for HART rev 7.1, part 2

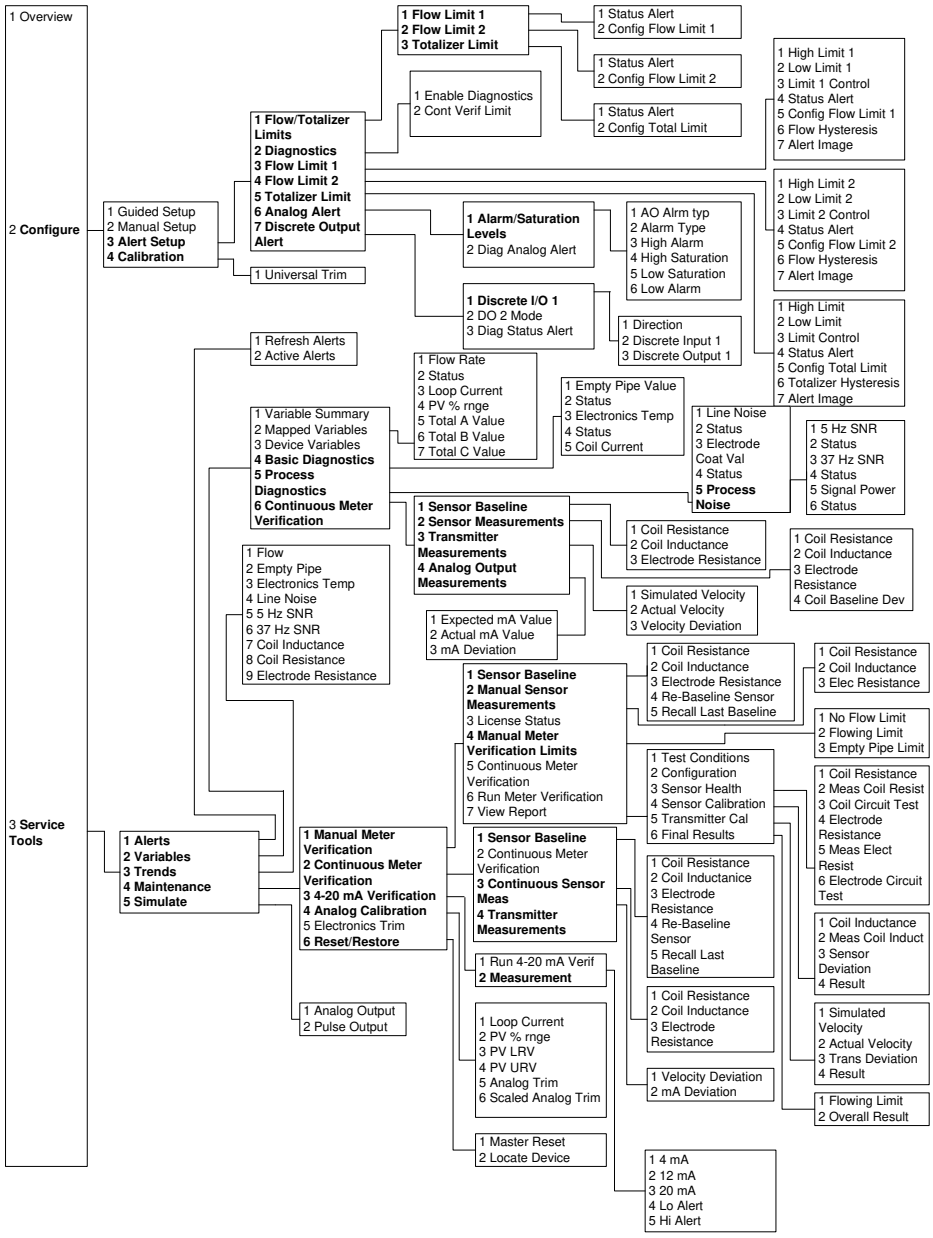

# 8 Advanced Configuration Functionality

## 8.1 Introduction

This section contains information for advanced configuration parameters.

The software configuration settings for the transmitter can be accessed through a HART®-based communicator, Local Operator Interface (LOI), AMS, or through a control system. Before operating the transmitter in an actual installation, you should review all of the factory set configuration data to ensure that they reflect the current application.

## 8.2 Configure outputs

| | |
|---|---|
| LOI menu path | **Detailed Setup → Output Config** |

The configure outputs functionality is used to configure advanced features that control the analog, pulse, auxiliary, and totalizer outputs of the transmitter.

### 8.2.1 Analog output

| | |
|---|---|
| LOI menu path | **Detailed Setup → Output Config → Analog** |

The analog output function is used to configure all of the features of the 4-20 mA output.

#### Upper range value

| | |
|---|---|
| LOI menu path | **Detailed Setup → Output Config → Analog → PV URV** |

The *upper range value* (URV) sets the 20 mA point for the analog output. This value is typically set to full-scale flow. The units that appear will be the same as those selected under the units parameter. The URV may be set between –39.3 ft/s to 39.3 ft/s (–12 m/s to 12 m/s) or the equivalent range based on the selected flow units. There must be at least 1 ft/s (0.3 m/s) span or equivalent between the URV and LRV.

**Note**
If entering a negative number, the minus sign must be entered in the furthest left position on the LOI.

### Lower range value

| | |
|---|---|
| LOI menu path | **Detailed Setup → Output Config, → Analog → PV LRV** |

The *lower range value* (LRV) sets the 4 mA point for the analog output. This value is typically set to zero flow. The units that appear will be the same as those selected under the units parameter. The LRV may be set between –39.3 ft/s to 39.3 ft/s (–12 m/s to 12 m/s) or the equivalent range based on the selected flow units. There must be at least 1 ft/s (0.3 m/s) span or equivalent between the URV and LRV.

**Note**
If entering a negative number, the minus sign must be entered in the furthest left position on the LOI.

### Alarm type

| | |
|---|---|
| LOI menu path | **Detailed Setup → Output Config → Analog → Alarm Type** |

The analog output alarm type displays the position of the alarm switch on the electronics board. There are two available positions for this switch:

- High
- Low

### Alarm level

| | |
|---|---|
| LOI menu path | **Detailed Setup → Output Config → Analog → Alarm Level** |

The alarm level configuration will drive the transmitter to preset values if an alarm occurs. There are two options:

- Rosemount Alarm and Saturation Values (see table Table 8-1 for specific values)
- NAMUR-Compliant Alarm and Saturation Values (see Table 8-2 for specific values)

**Table 8-1: Rosemount Values**

| Level | 4-20 mA saturation | 4-20 mA alarm |
|---|---|---|
| Low | 3.9 mA | 3.75 mA |
| High | 20.8 mA | 22.5 mA |

**Table 8-2: NAMUR Values**

| Level | 4-20 mA saturation | 4-20 mA alarm |
|---|---|---|
| Low | 3.8 mA | 3.5 mA |
| High | 20.5 mA | 22.6 mA |

### AO diagnostic alarm

| | |
|---|---|
| LOI menu path | **Detailed Setup → Output Config → Analog → AO Diag Alarm** |

There are diagnostics that, when under active conditions, do not drive the analog output to alarm level. The AO diagnostic alarm menu enables selection of these diagnostics to be associated with an analog alarm. If any of the selected diagnostics are active, it will cause the analog output to go to the configured alarm level. For a list of diagnostic alarms that can be configured to drive an analog alarm, see Table 8-3.

**Table 8-3: Analog Alarm Diagnostic Options**

| Diagnostic(1) | Description |
|---|---|
| Empty Pipe | Drive to an alarm state when empty pipe is detected. |
| Reverse Flow | Drive to an alarm state when reverse flow is detected. |
| Grounding / Wiring Fault | Drive to an alarm state when grounding or wiring fault is detected. |
| High Process Noise | Drive to an alarm state when the transmitter detects high levels of process noise. |
| Electronics Temperature Out of Range | Drive to an alarm state when the temperature of the electronics exceeds allowable limits |
| Electrode Coating Limit 2 | Drive to an alarm state when electrode coating reaches a point where it impacts the flow measurement |
| Totalizer Limit 1 | Drive to an alarm state when the totalizer value exceeds the parameters set in the totalizer limit configuration (see page 5-x for more details on this functionality) |
| Flow Limit 1 | Drive to an alarm state when the flow rate exceeds the parameters set in the flow limit 1 configuration (see page 5-x for more details on this functionality) |
| Flow Limit 2 | Drive to an alarm state when the flow rate exceeds the parameters set in the flow limit 2 configuration (see page 5-x for more details on this functionality) |
| Continuous Meter Verification | Drive to an alarm state when the continuous meter verification diagnostic detects a failure of one of the tests |

*(1) See Troubleshooting for more details on each of the diagnostics*

## 8.2.2 Pulse output

| | |
|---|---|
| LOI menu path | **Detailed Setup → Output Config → Pulse** |

Under this function the pulse output of the transmitter can be configured.

### Pulse scaling

| | |
|---|---|
| LOI menu path | **Detailed Setup → Output Config → Pulse → Pulse Scaling** |

Transmitter may be commanded to supply a specified frequency between 1 pulse/ day at 39.37 ft/sec (12 m/s) to 10,000 Hz at 1 ft/sec (0.3 m/s).

**Note**
The maximum pulse scaling frequency for transmitters with an intrinsically safe output is 5000 Hz.

**Note**
Line size, special units, and density must be selected prior to configuration of the pulse scaling factor.

The pulse output scaling equates one transistor switch closure pulse to a selectable number of volume units. The volume unit used for scaling pulse output is taken from the numerator of the configured flow units. For example, if gal/min had been chosen when selecting the flow unit, the volume unit displayed would be gallons.

**Note**
The pulse output scaling is designed to operate between 0 and 10,000 Hz. The minimum conversion factor value is found by dividing the minimum span (in units of volume per second) by 10,000 Hz.

When selecting pulse output scaling, the maximum pulse rate is 10,000 Hz. With the 10 percent over range capability, the absolute limit is 11,000 Hz. For example, if you want the transmitter to pulse every time 0.01 gallons pass through the sensor, and the flow rate is 10,000 gal/min, you will exceed the 10,000 Hz full-scale limit:

$$\frac{10{,}000\ gal}{1\ min} \times \frac{1\ min}{(60\ sec)} \times \frac{1\ pulse}{0.01\ gal} = 16{,}666.7\ Hz$$

The best choice for this parameter depends upon the required resolution, the number of digits in the totalizer, the extent of range required, and the maximum frequency limit of the external counter.

### Pulse factor units

| | |
|---|---|
| LOI menu path | **Detailed Setup → Output Config → Pulse → Units** |

The pulse factor unit assigns the unit of measure to the pulse scaling factor. The default read-only value is the unit of measure from the configured flow units. For example, if gal/min is selected when configuring the flow units, the pulse factor unit will be gallons.

### Pulse width

| | |
|---|---|
| LOI menu path | **Detailed Setup → Output Config → Pulse → Pulse Width** |

The factory default pulse width is 0.5 ms.

The width, or duration, of the pulse can be adjusted to match the requirements of different counters or controllers (see Figure 8-1). These are typically lower frequency applications (< 1000Hz). The transmitter will accept values from 0.1 ms to 650 ms.

For frequencies higher than 1000Hz, it is recommended to set the pulse mode to 50% duty cycle by setting the pulse mode to frequency output.

The pulse width will limit the maximum frequency output, If the pulse width is set too wide (more than 1/2 the period of the pulse) the transmitter will limit the pulse output. See example below.

**Figure 8-1: Pulse Output**

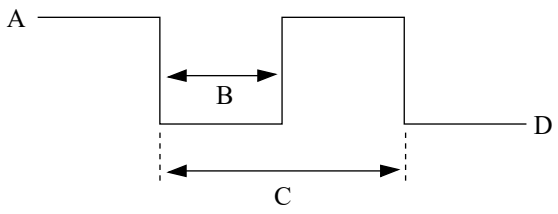


*A. Open*
*B. Pulse width*
*C. Period*
*D. Closed*

Example

If pulse width is set to 100 ms, the maximum output is 5Hz; for a pulse width of 0.5 ms, the maximum output would be 1000Hz (at the maximum frequency output there is a 50% duty cycle).

| Pulse width | Minimum period (50% duty cycle) | Maximum frequency |
|---|---|---|
| 100 ms | 200 ms | $\frac{1\ cycle}{200\ ms} = 5\ Hz$ |
| 0.5 ms | 1.0 ms | $\frac{1\ cycle}{1.0\ ms} = 1000\ Hz$ |

To achieve the greatest maximum frequency output, set the pulse width to the lowest value that is consistent with the requirements of the pulse output power source, pulse driven external totalizer, or other peripheral equipment.

The maximum flow rate is 10,000 gpm. Set the pulse output scaling such that the transmitter outputs 10,000 Hz at 10,000 gpm.

$$Pulse\ Scaling = \frac{Flow\ Rate\ (gpm)}{(60\ \frac{sec}{min}) \times (frequency)}$$

$$Pulse\ Scaling = \frac{10{,}000\ gpm}{(60\ \frac{sec}{min}) \times (10{,}000\ Hz)}$$

$$Pulse\ Scaling = 0.0167\ \frac{gal}{pulse}$$

$$1\ pulse = 0.0167\ gal$$

**Note**
Changes to pulse width are only required when there is a minimum pulse width required for external counters, relays, etc.

The external counter is ranged for 350 gpm and pulse is set for one gallon. Assuming the pulse width is 0.5 ms, the maximum frequency output is 5.833Hz.

$$Frequency = \frac{Flow\ Rate\ (gpm)}{(60\ \frac{sec}{min}) \times (pulse\ scaling\ \frac{gal}{pulse})}$$

$$Pulse\ Scaling = \frac{350\ gpm}{(60\ \frac{sec}{min}) \times 1\ \frac{gal}{pulse}}$$

$$Frequency = 5.833\ Hz$$

The upper range value (20mA) is 3000 gpm. To obtain the highest resolution of the pulse output, 10,000 Hz is scaled to the full scale analog reading.

$$Frequency = \frac{Flow\ Rate\ (gpm)}{(60\ \frac{sec}{min}) \times (pulse\ scaling\ \frac{gal}{pulse})}$$

$$Pulse\ Scaling = \frac{3{,}000\ gpm}{(60\ \frac{sec}{min}) \times 10{,}000\ Hz}$$

$$\text{Pulse Scaling} = 0.005 \ \frac{gal}{pulse}$$

*1 pulse = 0.005 gal*

### Pulse mode

| | |
|---|---|
| LOI menu path | **Detailed Setup → Output Config → Pulse → Pulse Mode** |

The pulse mode configures the frequency output of the pulse. It can be set to either 50% duty cycle, or fixed. There are two options that pulse mode can be configured to:

- Pulse Output (user defines a fixed pulse width)
- Frequency Output (pulse width automatically set to 50% duty cycle)

To use pulse width settings, pulse mode must be set to pulse output. Frequency output is not available with Intrinsically Safe output, option code B.

## 8.2.3 Totalizer

The totalizer provides the total amount of fluid that has passed through the meter. There are three available totalizers: Total A, Total B, and Total C. They can be independently configured for one of the following options:

- Net - increments with forward flow and decrements with reverse flow (reverse flow must be enabled).
- Reverse total - will only increment with reverse flow if reverse flow is enabled
- Forward total - will only increment with forward flow

All totalizer values will be reset if **line size** is changed. This will happen even if the totalizer reset control is set to **non-resettable**.

The totalizers have the capability to increment the total to a maximum value of 50 feet per second of flow (or the volumetric equivalent) for a period of 20 years before roll-over occurs.

### View Totals

| | |
|---|---|
| LOI menu path | Totalizer A: **Totalizers → View Total A**<br>Totalizer B: **Totalizers → View Total B**<br>Totalizer C: **Totalizers → View Total C** |

Displays the current value for each totalizer and shows the totalizer incrementing/decrementing based on totalizer configuration and flow direction.

### Configure totalizers

| | |
|---|---|
| LOI menu path | **Totalizers → Config/Control** |

### Totalizer direction

| | |
|---|---|
| LOI menu path | Totalizer A: **Totalizers** → **Config/Control** → **Total A** → **Total A Config** → **Direction**<br>Totalizer B: **Totalizers** → **Config/Control** → **Total B** → **Total B Config** → **Direction**<br>Totalizer C: **Totalizers** → **Config/Control** → **Total C** → **Total C Config** → **Direction** |

Configure the direction for the totalizers as either Net, Forward, or Reverse.

### Totalizer units

| | |
|---|---|
| LOI menu path | Totalizer A: **Totalizers** → **Config/Control** → **Total A** → **Total A Config** → **TotA Units**<br>Totalizer B: **Totalizers** → **Config/Control** → **Total B** → **Total B Config** → **TotB Units**<br>Totalizer C: **Totalizers** → **Config/Control** → **Total C** → **Total C Config** → **TotC Units** |

Configure the units for totalizers.

**Table 8-4: Totalizer units**

| **Volume units** | | **Mass units** | | **Other units** | |
|---|---|---|---|---|---|
| **LOI** | **Units** | **LOI** | **Units** | **LOI** | **Units** |
| gal | Gallons | KG | Kilograms | ft | Feet |
| l | Liters | Mton | Metric tons | m | Meters |
| Igal | Imperial gallons | lb | Pounds | Special | Special Units(1) |
| m3 | Cubic meters | Ston | Short tons | | |
| B42 | Barrels (42 gallonsJ) | | | | |
| ft3 | Cubic feet | | | | |
| cm3 | Cubic centimeters | | | | |
| B31 | Barrels (31 gallons) | | | | |
| Mgal | Million gallons | | | | |

*(1) See Configure special units.*

### Reset configuration

| | |
|---|---|
| LOI menu path | Totalizer A: **Totalizers** → **Config/Control** → **Total A** → **Total A Config** → **TotA Reset Config**<br>Totalizer B: **Totalizers** → **Config/Control** → **Total B** → **Total B Config** → **TotB Reset Config**<br>Totalizer C: **Totalizers** → **Config/Control** → **Total C** → **Total C Config** → **TotC Reset Config** |

Configure if the totalizer is non-resettable, or if it can be reset through the reset commands.

### Reset individual totalizer

| | |
|---|---|
| LOI menu path | Totalizer A: **Totalizers** → **Config/Control** → **Total A** → **Reset Total A**<br>Totalizer B: **Totalizers** → **Config/Control** → **Total B** → **Reset Total B**<br>Totalizer C: **Totalizers** → **Config/Control** → **Total C** → **Reset Total C** |

Independently reset the totalizers. This requires the reset option to be configured as resettable.

### Reset all totalizers

| | |
|---|---|
| LOI menu path | **Totalizers** → **Config/Control** → **Reset All** |

This global command will reset totalizer values to zero for all totalizers that have been configured as resettable.

### Totalizer security

| | |
|---|---|
| LOI menu path | **Totalizers** → **Config/Control** → **Security** |

Configure totalizer security capabilities for the Local Operator Interface and write protection.

### LOI control

| | |
|---|---|
| LOI menu path | **Totalizers** → **Config/Control** → **Security** → **LOI Control** |

Configure the ability to start, stop, and reset the totalizers through the LOI.

### LOI totalizer start/stop

| | |
|---|---|
| LOI menu path | **Totalizers** → **Config/Control** → **Security** → **LOI Control** → **LOI Start/Stop** |

Enable/disable the ability to start or stop totalizers through the LOI.

### LOI totalizer reset

| | |
|---|---|
| LOI menu path | **Totalizers** → **Config/Control** → **Security** → **LOI Control** → **LOI Reset** |

Enable/disable the ability to reset the totalizers through the LOI.

### Totalizer write protection

| | |
|---|---|
| LOI menu path | **Totalizers** → **Config/Control** → **Security** → **Write Protect** |

In addition to controlling the LOI capability to start/stop and reset the totalizers, specific write protect functionality can also be configured adding an additional level of security to the totalizers.

### Start/stop write protect

| | |
|---|---|
| LOI menu path | **Totalizers** → **Config/Control** → **Security** → **Write Protect** → **WP Start/Stop** |

Configure write protection on the ability to start or stop the totalizers. This is a global command and applies to all totalizers.

### Reset write protect

| | |
|---|---|
| LOI menu path | **Totalizers** → **Config/Control** → **Security** → **Write Protect** → **WP Reset** |

Configure write protection on the ability to reset the totalizers. This is a global command and applies to all totalizers.

## 8.2.4 Discrete input/output

This configuration option is only available if the auxiliary output suite (option code AX) was ordered. The auxiliary output suite provides two channels for control.

- For HART version 5.5 or 7.1 firmware, the discrete input can provide positive zero return (PZR) or reset totalizer (A, B, C, or all totals).

  **Note**
  If a particular totalizer is configured to be not resettable, the totalizer will not be reset with this function.

- The discrete output control function can be configured to drive an external signal to indicate zero flow, reverse flow, empty pipe, diagnostic status, flow limit, or transmitter status.

A complete list and description of the available auxiliary functions is provided below.

### Discrete input options (Channel 1 only)

| | |
|---|---|
| **PZR (Positive Zero Return)** | When conditions are met to activate the input, the transmitter will force the output to zero flow. |
| **Net Total Reset** | When conditions are met to activate the input, the transmitter will reset the net total value to zero. |

### Discrete output options

| | |
|---|---|
| **Reverse Flow** | The output will activate when the transmitter detects a reverse flow condition. |
| **Zero Flow** | The output will activate when a no flow condition is detected. |
| **Transmitter Fault** | The output will activate when a transmitter fault condition is detected. |
| **Empty Pipe** | The output will activate when the transmitter detects an empty pipe condition. |
| **Flow Limit 1** | The output will activate when the transmitter measures a flow rate that meets the conditions established for the flow limit 1 alert. |
| **Flow Limit 2** | The output will activate when the transmitter measures a flow rate that meets the conditions established for the flow limit 2 alert. |
| **Diagnostic Status Alert** | The output will activate when the transmitter detects a condition that meets the configured criteria of the diagnostic status alert. |
| **Total Limit** | The output will activate when the transmitter Totalizer A value meets the conditions established for the total limit alert. |

### Channel 1

Channel 1 can be configured as either a discrete input (DI) or as a discrete output (DO).

### DI/O 1 control

| | |
|---|---|
| LOI menu path | **Detailed Setup → Output Config → DI/DO Config → DI/O 1 → DI/O 1 Control** |

This parameter configures the auxiliary output channel 1. It controls whether channel 1 will be a discrete input or discrete output on terminals 11(-) and 12(+).

**Note**
The transmitter must have been ordered with the auxiliary output suite (option code AX) to have access to this functionality.

### Discrete input 1

| | |
|---|---|
| LOI menu path | **Detailed Setup → Output Config → DI/DO Config → DI/O 1 → DI 1** |

This parameter displays the configuration for channel 1 when used as a discrete input.

### Discrete output 1

| | |
|---|---|
| LOI menu path | **Detailed Setup → Output Config → DI/DO Config → DI/O 1 → DO 1** |

This parameter displays the configuration for channel 1 when used as a discrete output.

### Channel 2

Channel 2 is available as discrete output only.

### Discrete output 2

| | |
|---|---|
| LOI menu path | **Detailed Setup → Output Config → DI/DO Config → DO 2** |

This parameter displays the configuration for channel 2.

### Flow limit (1 and 2)

There are two configurable flow limits. Configure the parameters that will determine the criteria for activation of a HART alert if the measured flow rate falls within a set of configured criteria. This functionality can be used for operating simple batching operations or generating alerts when certain flow conditions are met. This parameter can be configured as a discrete output if the transmitter was ordered with the auxiliary output suite (option code AX) and the outputs are enabled. If a discrete output is configured for flow limit, the discrete output will activate when the conditions defined under mode configuration are met. See Mode below.

### Control

| | |
|---|---|
| LOI menu path | Flow 1: **Detailed Setup → Output Config → DI/DO Config → Flow Limit 1 → Control 1**<br>Flow 2: **Detailed Setup → Output Config → DI/DO Config → Flow Limit 2 → Control 2** |

This parameter turns the flow limit HART alert ON or OFF.

**ON** The transmitter will generate a HART alert when the defined conditions are met. If a discrete output is configured for flow limit, the discrete output will activate when the conditions for mode are met.

**OFF** The transmitter will not generate an alert for the flow limit.

### Mode

| | |
|---|---|
| LOI menu path | Flow 1: **Detailed Setup** → **Output Config** → **DI/DO Config** → **Flow Limit 1** → **Mode 1**<br>Flow 2: **Detailed Setup** → **Output Config** → **DI/DO Config** → **Flow Limit 2** → **Mode 2** |

The mode parameter sets the conditions under which the flow limit HART alert will activate. High and low limits exist for each channel and can be configured independently.

| | |
|---|---|
| **> High limit** | The HART alert will activate when the measured flow rate exceeds the high limit set point. |
| **< Low limit** | The HART alert will activate when the measured flow rate falls below the low limit set point. |
| **In range** | The HART alert will activate when the measured flow rate is between the high limit and low limit set points. |
| **Out of range** | The HART alert will activate when the measured flow rate exceeds the high limit set point or falls below the low limit set point. |

### High limit

| | |
|---|---|
| LOI menu path | Flow 1: **Detailed Setup** → **Output Config** → **DI/DO Config** → **Flow Limit 1** → **High Limit 1**<br>Flow 2: **Detailed Setup** → **Output Config** → **DI/DO Config** → **Flow Limit 2** → **High Limit 2** |

Set the flow rate value that corresponds to the high limit set point for the flow limit alert.

### Low limit

| | |
|---|---|
| LOI menu path | Flow 1: **Detailed Setup** → **Output Config** → **DI/DO Config** → **Flow Limit 1** → **Low Limit 1**<br>Flow 2: **Detailed Setup** → **Output Config** → **DI/DO Config** → **Flow Limit 2** → **Low Limit 2** |

Set the flow rate value that corresponds to the low limit set point for the flow limit alert.

### Flow limit hysteresis

| | |
|---|---|
| LOI menu path | Flow 1: **Detailed Setup** → **Output Config** → **DI/DO Config** → **Flow Limit 1** → **Hysteresis**<br>Flow 2: **Detailed Setup** → **Output Config** → **DI/DO Config** → **Flow Limit 2** → **Hysteresis** |

Set the hysteresis band for the flow limit to determine how quickly the transmitter comes out of alert status. The hysteresis value is used for both flow limit 1 and flow limit 2. Changing this parameter under the configuration parameters for one channel will cause it to also change in the other channel.

### Total limit

Configure the parameters that will determine the criteria for activating a HART alert if Totalizer A falls within a set of configured criteria. This functionality can be used for operating simple batching operations or generating alerts when certain localized values are met. This parameter can be configured as a discrete output if the transmitter was ordered with auxiliary outputs enabled (option code AX). If a digital output is configured for total limit, the digital output will activate when the conditions for total mode are met.

### Total control

| | |
|---|---|
| LOI menu path | **Detailed Setup → Output Config → DI/DO Config → Total Limit → Total Control** |

This parameter turns the total limit HART alert ON or OFF.

**ON** The transmitter will generate a HART alert when the defined conditions are met.

**OFF** The transmitter will not generate a HART alert for the total limit.

### Total mode

| | |
|---|---|
| LOI menu path | **Detailed Setup → Output Config → DI/DO Config → Total Limit → Total Mode** |

The total mode parameter sets the conditions under which the total limit HART alert will activate. High and low limits exist for each channel and can be configured independently.

**> High limit** The HART alert will activate when the totalizer value exceeds the high limit set point.

**< Low limit** The HART alert will activate when the totalizer value falls below the low limit set point.

**In range** The HART alert will activate when the totalizer value is between the high limit and low limit set points.

**Out of range** The HART alert will activate when the totalizer value exceeds the high limit set point or falls below the low limit set point.

### Total high limit

| | |
|---|---|
| LOI menu path | **Detailed Setup → Output Config → DI/DO Config → Total Limit → Tot Hi Limit** |

Set Totalizer A to a value that corresponds to the high limit set point for the total high limit alert.

### Total low limit

| | |
|---|---|
| LOI menu path | **Detailed Setup → Output Config → DI/DO Config → Total Limit → Tot Low Limit** |

Set the net total value that corresponds to the low limit set point for the total low limit alert.

### Total limit hysteresis

| | |
|---|---|
| LOI menu path | **Detailed Setup → Output Config → DI/DO Config → Total Limit → Hysteresis** |

Set the hysteresis band for the total limit to determine how quickly the transmitter comes out of alert status.

#### Diagnostic status alert

| | |
|---|---|
| LOI menu path | **Detailed Setup → Output Config → DI/DO Config → Diag Alert** |

The diagnostic status alert is used to turn on or off the diagnostics that will cause this alert to activate.

**ON** The diagnostic status alert will activate when a transmitter detects a diagnostic designated as ON.

**OFF** The diagnostic status alert will not activate when diagnostics designated as OFF are detected.

Alerts for the following diagnostics can be turned ON or OFF:

- Electronics Failure
- Coil Open Circuit
- Empty Pipe
- Reverse Flow
- Ground/Wiring Fault
- High Process Noise
- Electronics Temperature Out of Range
- Electrode Coat Limit 1
- Electrode Coat Limit 2
- Continuous Meter Verification

## 8.3 Configure HART

The transmitter has four HART variables available as outputs. The variables can be configured for dynamic readings including flow, total, and diagnostic values. The HART output can also be configured for burst mode or multi-drop communication if required.

### 8.3.1 Variable mapping

| | |
|---|---|
| LOI menu path | **Detailed Setup → Output Config → HART → Variable Map** |

Variable mapping allows configuration of the variables that are mapped to the secondary, tertiary and quaternary variables. The primary variable is fixed to output flow and cannot be configured.

#### Primary variable (PV)

| | |
|---|---|
| LOI menu path | **Detailed Setup → Output Config → HART → Variable Map → PV** |

The primary variable is configured for flow. This variable is fixed and cannot be configured. The primary variable is tied to the analog output.

### Secondary variable (SV)

| | |
|---|---|
| LOI menu path | **Detailed Setup → Output Config → HART → Variable Map → SV** |

The secondary variable maps the second variable of the transmitter. This variable is a HART only variable and can be read from the HART signal with a HART enabled input card, or can be burst for use with a HART Tri-Loop to convert the HART signal to an analog output. Options available for mapping to this variable can be found in Available Variables.

### Tertiary variable (TV)

| | |
|---|---|
| LOI menu path | **Detailed Setup → Output Config → HART → Variable Map → TV** |

The tertiary variable maps the third variable of the transmitter. This variable is a HART only variable and can be read from the HART signal with a HART enabled input card, or can be burst for use with a HART Tri-Loop to convert the HART signal to an analog output. Options available for mapping to this variable can be found in Available Variables.

### Quaternary variable (QV)

| | |
|---|---|
| LOI menu path | **Detailed Setup → Output Config → HART → Variable Map → QV** |

The quaternary variable maps the fourth variable of the transmitter. This variable is a HART only variable and can be read from the HART signal with a HART enabled input card, or can be burst for use with a HART Tri-Loop™ to convert the HART signal to an analog output. Options available for mapping to this variable can be found in Available Variables.

### Available Variables

- Flow Rate
- Pulse Output
- Totalizer A
- Totalizer B
- Totalizer C
- Electronics Temperature
- Line Noise
- 5 Hz SNR
- 37 Hz SNR
- Signal Power
- Empty Pipe Value
- Transmitter Velocity Deviation
- Electrode Coating Value
- Electrode Resistance
- Coil Resistance Value
- Coil Inductance Value
- Coil Baseline Deviation
- Analog Output Feedback Deviation
- Coil Current

## 8.3.2 Poll address

| | |
|---|---|
| LOI menu path | **Detailed Setup → Output Config → HART → Poll Address** |

Poll address enables the transmitter to be used in point-to-point mode or multi-drop mode. When in multi-drop mode, the poll address is used to identify each meter on the multi-drop line.

The transmitter poll address is set to zero at the factory, allowing standard operation in a point-to-point manner with a 4–20 mA output signal. To activate multi-drop communication:

- HART 5: The transmitter poll address must be changed to a non-zero integer (1-15). This change fixes the analog output current to 4 mA and disables the failure mode alarm signal.
- HART 7: The transmitter poll address must be changed to a non-zero integer (1-63).
- HART 7: The Loop Current Mode may need to be set to ON to fix the output current to 4 mA, or it can be set to OFF if a 4–20 mA output is desired. See Loop current mode.

## 8.3.3 Loop current mode

| | |
|---|---|
| LOI menu path | **Detailed Setup → Output Config → HART → Loop Curr Mode** |

Available on HART 7 through the LOI only.

When loop current mode is set to **ON**, the analog output current tracks with changes in PV. When loop current mode is **OFF**, the analog output current is fixed at 4 mA.

## 8.3.4 HART revision

Transmitter electronics supporting software revision v5.4 have a fixed HART 5 menu configuration. Transmitter electronics supporting software revision v5.5 or v7.1 can be configured for either HART 5 or HART 7 menu configurations.

### Universal revision

Read-only informational variable that reflects the setting of the HART revision in the transmitter.

### Change HART revision

On enabled devices, this function allows the user to change between HART 5 or HART 7.

## 8.3.5 Burst mode

| | |
|---|---|
| LOI menu path | **Detailed Setup → Output Config → HART → Burst Mode** |

The transmitter includes a burst mode function that can be enabled to broadcast the primary variable or all dynamic variables approximately three to four times per second. Burst mode is a specialized function used in very specific applications. The burst mode function enables you to select the variables that are broadcast while in the burst mode.

Burst mode enables you to set the burst mode as **OFF** or **ON**:

- **OFF** - Turns burst mode off; no data are broadcast over the loop
- **ON** - Turns burst mode on; data selected under burst option are broadcast over the loop

Additional burst mode capabilities, not visible from the LOI, are available through a HART host.

### Burst option (burst command)—HART 5 only

| | |
|---|---|
| LOI menu path | **Detailed Setup → Output Config → HART → Burst Command** |

Burst option enables you to select the variable(s) that is broadcast during the transmitter burst. Choose one of the following options:

- 1; PV; Primary Variable - Selects the primary variable

- 2; % range/current; Percent of Range and Loop Current - Selects the variable as percent of range and analog output
- 3; Process vars/crnt; All Variables and Loop Current - Selects all variables and analog output
- 110; Dynamic vars; Dynamic Variables - Burst all dynamic variables in the transmitter

#### Request preambles

| | |
|---|---|
| LOI menu path | **Detailed Setup → Output Config → HART → Req Preams** |

Request preambles is the number of preambles required by the transmitter for HART communications.

#### Response preambles

| | |
|---|---|
| LOI menu path | **Detailed Setup → Output Config → HART → Resp Preams** |

Response preambles is the number of preambles sent by the transmitter in response to any host request.

## 8.4 Configure LOI/Display

### 8.4.1 Flow and totalizer display

| | |
|---|---|
| LOI menu path | **Detailed Setup → LOI Config → Flow Display** |

Use flow display to configure the parameters that will appear on the LOI flowrate screen. The flowrate screen displays two lines of information. Choose one of the following options:

- Flowrate, % of Span
- Flow, Total A
- % Span, Total A
- Flow, Total B
- % Span, Total B
- Flow, Total C
- % Span, Total C

### 8.4.2 Language

| | |
|---|---|
| LOI menu path | **Detailed Setup → LOI Config → Language** |

Use language to configure the display language shown on the LOI. Choose one of the following options:

- English
- Spanish
- Portuguese
- German

- French

### 8.4.3 Display lock

| | |
|---|---|
| LOI menu path | **Detailed Setup → LOI Config → Disp Auto Lock** |

The transmitter has display lock functionality to prevent unintentional configuration changes. The display can be locked manually or configured to automatically lock after a set period of time.

- OFF (default)
- 1 Minute
- 10 Minutes

The display is always locked on the flow screen.

### 8.4.4 Error mask

| | |
|---|---|
| LOI menu path | **Detailed Setup → LOI Config → LOI Err Mask** |

Use LOI error mask to turn off the analog output power error message (AO No Power). This may be desired if the analog output is not being used.

### 8.4.5 Backlight control

| | |
|---|---|
| LOI menu path | **Detailed Setup → LOI Config → Backlight** |

To conserve power, the LOI backlight can be configured to automatically turn off after a set amount of time without keypad activity.

- Always OFF (default for low power)
- 10 Seconds
- 20 Seconds
- 30 Seconds
- Always ON (default)

## 8.5 Additional parameters

The following parameters may be required for detailed configuration settings based on your application.

### 8.5.1 Coil drive frequency

| | |
|---|---|
| LOI menu path | **Detailed Setup → More Params → Coil Frequency** |

Use coil drive frequency to change the pulse rate of the coils.

- 5 Hz - The standard coil drive frequency is 5 Hz, which is sufficient for nearly all applications.

- 37 Hz - If the process fluid causes a noisy or unstable output, increase the coil drive frequency to 37.5 Hz. If the 37 Hz mode is selected, perform the auto zero function for optimum performance.

**Note**
37 Hz coil drive frequency should not be used for sensor sizes larger than 20-inch.

See Auto zero.

## 8.5.2 Process density

| | |
|---|---|
| LOI menu path | **Detailed Setup → More Params → Proc Density** |

Use the process density value to convert from a volumetric flow rate to a mass flow rate using the following equation:

Qm = Qv x p

Where:

Qm is the mass flow rate

Qv is the volumetric flow rate, and

p is the fluid density

## 8.5.3 Reverse flow

| | |
|---|---|
| LOI menu path | **Detailed Setup → Output Config → Reverse Flow** |

Use reverse flow to enable or disable the transmitter's ability to read flow in the opposite direction of the flow direction arrow (see Flow direction). This may occur when the process has bi-directional flow, or when either the electrode wires or the coil wires are reversed (see Troubleshooting Remote wiring). This also enables the totalizer to count in the reverse direction.

## 8.5.4 Low flow cutoff

| | |
|---|---|
| LOI menu path | **Detailed Setup → Sig Processing → Lo-Flow Cutoff** |

Low flow cutoff allows the user to set a low flow limit to be specified. The analog output signal is driven to 4mA for flow rates below the set point. The low flow cutoff units are the same as the PV units and cannot be changed. The low flow cutoff value applies to both forward and reverse flows.

## 8.5.5 PV (flow) damping

| | |
|---|---|
| LOI menu path | **Detailed Setup → Sig Processing → Damping** |

Primary variable damping allows selection of a response time, in seconds, to a step change in flow rate. It is most often used to smooth fluctuations in output.

### 8.5.6 Signal processing

The transmitter contains several advanced functions that can be used to stabilize erratic outputs caused by process noise. The signal processing menu contains this functionality.

If the 37 Hz coil drive mode has been set, and the output is still unstable, the damping and signal processing function should be used. It is important to set the coil drive mode to 37 Hz first, so the loop response time is not increased.

The transmitter provides for a very easy and straightforward start-up, and also incorporates the capability to deal with difficult applications that have previously manifested themselves in a noisy output signal. In addition to selecting a higher coil drive frequency (37 Hz vs. 5 Hz) to isolate the flow signal from the process noise, the microprocessor can actually scrutinize each input based on three user-defined parameters to reject the noise specific to the application.

See Digital Signal Processing for the detailed description of how the signal processing works.

## 8.6 Configure special units

Special units are used when the application requires units that are not included in the flow units available from the device. Refer to Measurement units for a complete list of the available units.

### 8.6.1 Base volume unit

| | |
|---|---|
| LOI menu path | **Basic Setup → Flow Units → Special Units → Base Vol Units** |

Base volume unit is the unit from which the conversion is being made. Set this variable to the appropriate option.

### 8.6.2 Conversion factor

| | |
|---|---|
| LOI menu path | **Basic Setup → Flow Units → Special Units → Conv Factor** |

The special units conversion factor is used to convert base units to special units. For a straight conversion of units from one unit of measure to a different unit of measure, the conversion factor is the number of base units in the new unit.

Example: If you are converting from gallons to barrels and there are 31 gallons in a barrel, the conversion factor is 31.

### 8.6.3 Base time unit

| | |
|---|---|
| LOI menu path | **Basic Setup → Flow Units → Special Units → Base Time Unit** |

Base time unit provides the time unit from which to calculate the special units.For example, if your special units is a volume per minute, select minutes.

### 8.6.4 Special volume unit

| | |
|---|---|
| LOI menu path | **Basic Setup → Flow Units → Special Units → Volume Unit** |

Special volume unit enables you to display the volume unit format to which you have converted the base volume units.

Example: If the special units are abc/min, the special volume variable is abc. The volume units variable is also used in totalizing the special units flow.

### 8.6.5 Special flow rate unit

| | |
|---|---|
| LOI menu path | **Basic Setup → Flow Units → Special Units → Rate Unit** |

Flow rate unit is a format variable that provides a record of the units to which you are converting. The Handheld Communicator will display a special units designator as the units format for your primary variable. The actual special units setting you define will not appear. Four characters are available to store the new units designation. The LOI will display the four character designation as configured.

Example: To display flow in acre-feet per day, and acre-foot is equal to 43560 cubic feet, the procedure would be:

1. Set the volume unit to ACFT.
2. Set the base volume unit to ft3.
3. Set the conversion factor to 43560.
4. Set the time base unit to Day.
5. Set the flow rate unit to AF/D.

# 9 Advanced Diagnostics Configuration

## 9.1 Introduction

Rosemount magnetic flowmeters provide device diagnostics that detect and warn of abnormal situations throughout the life of the meter—from installation to maintenance and meter verification. With Rosemount magnetic flowmeter diagnostics enabled, plant availability and throughput can be improved, and costs through simplified installation, maintenance and troubleshooting can be reduced.

**Table 9-1: Basic diagnostics availability**

| Diagnostic name | Diagnostic category | Product capability |
|---|---|---|
| Tunable Empty Pipe | Process | Standard |
| Electronics Temperature | Maintenance | Standard |
| Coil Fault | Maintenance | Standard |
| Transmitter Fault | Maintenance | Standard |
| Reverse Flow | Process | Standard |
| Electrode Saturation | Process | Standard |
| Coil Current | Maintenance | Standard |
| Coil Power | Maintenance | Standard |
| Grounding and Wiring Fault | Installation | Standard |

**Table 9-2: Advanced diagnostics availability**

| Diagnostic name | Diagnostic category | Product capability |
|---|---|---|
| High Process Noise | Process | Suite 1 (DA1) |
| Coated Electrode Detection | Process | Suite 1 (DA1) |
| Commanded Meter Verification | Meter Health | Suite 2 (DA2) |
| Continuous Meter Verification | Meter Health | Suite 2 (DA2) |
| 4-20 mA Loop Verification | Installation | Suite 2 (DA2) |

## 9.2 Licensing and enabling

All advanced diagnostics are licensed by ordering option code DA1, DA2, or both. In the event that a diagnostic option is not ordered, advanced diagnostics can be licensed in the field through the use of a license key. Each transmitter has a unique license key specific to the diagnostic option code. A trial license is also available to enable the advanced diagnostics. This temporary functionality will be automatically disabled after 30-days or when power to the transmitter is cycled, whichever occurs first. This trial code can be used a maximum of three times per transmitter. See the detailed procedures below for entering the license key and enabling the advanced diagnostics. To obtain a permanent or trial license key, contact an Emerson representative.

### 9.2.1 Licensing the diagnostics

#### Procedure

1. Power up the transmitter.
2. Verify the software version is 4.4 software or later.

| | |
|---|---|
| LOI menu path | **Detailed Setup → Device Info → Revision Num → Software Num** |

3. Determine the Device ID.

| | |
|---|---|
| LOI menu path | **Detailed Setup → Device Info → Device ID** |

4. Obtain a license key from an Emerson representative.
5. Enter license key.

| | |
|---|---|
| LOI menu path | **Diagnostics → Advanced Diag → Licensing → License Key → License Key** |

## 9.3 Tunable empty pipe detection

The tunable empty pipe detection provides a means of minimizing issues and false readings when the pipe is empty. This is most important in batching applications where the pipe may run empty with some regularity. If the pipe is empty, this diagnostic will activate, set the flow rate to 0, and deliver an alert.

#### Turning empty pipe on/off

| | |
|---|---|
| LOI menu path | **Diagnostics → Diag Controls → Empty Pipe** |

The tunable empty pipe detection diagnostic can be turned on or off as required by the application. The empty pipe diagnostic is shipped turned “On” by default.

### 9.3.1 Tunable empty pipe parameters

The tunable empty pipe diagnostic has one read-only parameter, and two parameters that can be custom configured to optimize the diagnostic performance.

#### Empty pipe (EP) value

| | |
|---|---|
| LOI menu path | **Diagnostics → Variables → Empty Pipe** |

This parameter shows the current empty pipe value. This is a read-only value. This number is a unit-less number and is calculated based on multiple installation and process variables such as sensor type, line size, process fluid properties, and wiring. If the empty pipe value exceeds the empty pipe trigger level for a specified number of updates, then the empty pipe diagnostic alert will activate.

#### Empty pipe (EP) trigger level

| | |
|---|---|
| LOI menu path | **Diagnostics → Basic Diag → Empty Pipe → EP Trig Level** |

Limits: 3 to 2000

Empty pipe trigger level is the threshold limit that the empty pipe value must exceed before the empty pipe diagnostic alert activates. The default setting from the factory is 100.

**Empty pipe (EP) counts**

| | |
|---|---|
| LOI menu path | **Diagnostics → Basic Diag → Empty Pipe → EP Counts** |

Limits: 2 to 50

Empty pipe counts is the number of consecutive updates that the transmitter must receive where the empty pipe value exceeds the empty pipe trigger level before the empty pipe diagnostic alert activates. The default setting from the factory is 5.

### 9.3.2 Optimizing tunable empty pipe

The tunable empty pipe diagnostic is set at the factory to properly diagnose most applications. If this diagnostic activates, the following procedure can be followed to optimize the empty pipe diagnostic for the application.

**Procedure**

1. Record the empty pipe value with a full pipe condition.

   **Example**

   Full reading = 0.2

2. Record the empty pipe value with an empty pipe condition.

   **Example**

   Empty reading = 80.0

3. Set the empty pipe trigger level to a value between the full and empty readings.

   For increased sensitivity to empty pipe conditions, set the trigger level to a value closer to the full pipe value.

   **Example**

   Set the trigger level to 25.0

4. Set the empty pipe counts to a value corresponding to the desired sensitivity level for the diagnostic.

   For applications with entrained air or potential air slugs, less sensitivity may be desired.

   **Example**

   Set the counts to 10

## 9.4 Electronics temperature

The transmitter continuously monitors the temperature of the internal electronics. If the measured electronics temperature exceeds the operating limits of –40 to 140 °F (–40 to 60 °C) the transmitter will go into alarm and generate an alert.

### 9.4.1 Turning electronics temperature on/off

| | |
|---|---|
| LOI menu path | **Diagnostics → Diag Controls → Elect Temp** |

The electronics temperature diagnostic can be turned on or off as required by the application.The electronics temperature diagnostic will be turned on by default.

### 9.4.2 Electronics temperature parameters

The electronics temperature diagnostic has one read-only parameter. It does not have any configurable parameters.

| | |
|---|---|
| LOI menu path | **Diagnostics → Variables → Elect Temp** |

This parameter shows the current temperature of the electronics. This is a read-only value.

## 9.5 Ground/wiring fault detection

The transmitter continuously monitors signal amplitudes over a wide range of frequencies. For the ground/wiring fault detection diagnostic, the transmitter specifically looks at the signal amplitude at frequencies of 50 Hz and 60 Hz which are the common AC cycle frequencies found throughout the world. If the amplitude of the signal at either of these frequencies exceeds 5 mV, that is an indication that there is a ground or wiring issue and that stray electrical signals are getting into the transmitter. The diagnostic alert will activate indicating that the ground and wiring of the installation should be carefully reviewed.

The ground/wiring fault detection diagnostic provides a means of verifying installations are done correctly. If the installation is not wired or grounded properly, this diagnostic will activate and deliver an alert. This diagnostic can also detect if the grounding is lost over-time due to corrosion or another root cause.

### 9.5.1 Turning ground/wiring fault on/off

| | |
|---|---|
| LOI menu path | **Diagnostics → Diag Controls → Ground/Wiring** |

The ground/wiring fault detection diagnostic can be turned on or off as required by the application. If the advanced diagnostics suite 1 (DA1 Option) was ordered, then the ground/wiring fault detection diagnostic will be turned on. If DA1 was not ordered or licensed, this diagnostic is not available.

### 9.5.2 Ground/wiring fault parameters

The ground/wiring fault detection diagnostic has one read-only parameter. It does not have any configurable parameters.

#### Line noise

| | |
|---|---|
| LOI menu path | **Diagnostics → Variables → Line Noise** |

The line noise parameter shows the amplitude of the line noise. This is a read-only value. This number is a measure of the signal strength at 50/60 Hz. If the line noise value exceeds 5 mV, then the ground/wiring fault diagnostic alert will activate.

# 9.6 High process noise detection

The high process noise diagnostic detects if there is a process condition causing an unstable or noisy reading that is not an actual flow variation. A common cause of high process noise is slurry flow, like pulp stock or mining slurries. Other conditions that cause this diagnostic to activate are high levels of chemical reaction or entrained gas in the liquid. If unusual noise or flow variation is seen, this diagnostic will activate and deliver an alert. If this situation exists and is left without remedy, it will add additional uncertainty and noise to the flow reading.

## 9.6.1 Turning high process noise on/off

| | |
|---|---|
| LOI menu path | **Diagnostics → Diag Controls → Process Noise** |

The high process noise diagnostic can be turned on or off as required by the application. If the advanced diagnostics suite 1 (DA1 Option) was ordered, then the high process noise diagnostic will be turned on. If DA1 was not ordered or licensed, this diagnostic is not available.

## 9.6.2 High process noise parameters

The high process noise diagnostic has two read-only parameters. It does not have any configurable parameters. This diagnostic requires that flow be present in the pipe and the velocity be greater than1 ft/s (0.3 m/s).

### 5 Hz signal to noise ratio (SNR)

| | |
|---|---|
| LOI menu path | **Diagnostics → Variables → 5Hz SNR** |

This parameter shows the value of the signal to noise ratio at the coil drive frequency of 5 Hz. This is a read-only value. This number is a measure of the signal strength at 5 Hz relative to the amount of process noise. If the transmitter is operating in 5 Hz mode, and the signal to noise ratio remains below 25 for one minute, then the high process noise diagnostic alert will activate.

### 37 Hz signal to noise ratio (SNR)

| | |
|---|---|
| LOI menu path | **Diagnostics → Variables → 37Hz SNR** |

This parameter shows the current value of the signal to noise ratio at the coil drive frequency of 37 Hz. This is a read-only value. This number is a measure of the signal strength at 37 Hz relative to the amount of process noise. If the transmitter is operating in 37 Hz mode, and the signal to noise ratio remains below 25 for one minute, then the high process noise diagnostic alert will activate.

# 9.7 Coated electrode detection

The coated electrode detection diagnostic provides a means of monitoring insulating coating buildup on the measurement electrodes. If coating is not detected, buildup over time can lead to a compromised flow measurement. This diagnostic can detect if the electrode is coated and if the amount of coating is affecting the flow measurement. There are two levels of electrode coating.

- Limit 1 indicates when coating is starting to occur, but has not compromised the flow measurement.
- Limit 2 indicates when coating is affecting the flow measurement and the meter should be serviced immediately.

## 9.7.1 Turning coated electrode detection on/off

| | |
|---|---|
| LOI menu path | **Diagnostics → Diag Controls → Elec Coating** |

The coated electrode detection diagnostic can be turned on or off as required by the application. If the advanced diagnostics suite 1 (DA1 option) was ordered, then the coated electrode detection diagnostic will be turned on. If DA1 was not ordered or licensed, this diagnostic is not available.

## 9.7.2 Coated electrode parameters

The coated electrode detection diagnostic has four parameters. Two are read-only and two are configurable parameters. The electrode coating parameters need to be initially monitored to accurately set the electrode coating limit levels for each application.

### Electrode coating (EC) value

| | |
|---|---|
| LOI menu path | **Diagnostics → Advanced Diag → Elec Coating → EC Current Val** |

The electrode coating value reads the value of the coated electrode detection diagnostic.

### Electrode coating (EC) level 1 limit

| | |
|---|---|
| LOI menu path | **Diagnostics → Advanced Diag → Elec Coat → EC Limit 1** |

Set the criteria for the electrode coating limit 1 which indicates when coating is starting to occur, but has not compromised the flow measurement. The default value for this parameter is 1000 k Ohm.

### Electrode coating (EC) level 2 limit

| | |
|---|---|
| LOI menu path | **Diagnostics → Advanced Diag → Elec Coat → EC Limit 2** |

Set the criteria for the electrode coating limit 2 which indicates when coating is affecting the flow measurement and the meter should be serviced immediately. The default value for this parameter is 2000 k Ohm.

### Maximum electrode coating (EC)

| | |
|---|---|
| LOI menu path | **Diagnostics → Advanced Diag → Elec Coat → EC Max Value** |

The maximum electrode coating value reads the maximum value of the coated electrode detection diagnostic since the last maximum value reset.

### Clear maximum electrode value

| | |
|---|---|
| LOI menu path | **Diagnostics → Advanced Diag → Elec Coat → Reset Max Val** |

Use this method to reset the maximum electrode coating value.

## 9.8 4-20 mA loop verification

The 4-20 mA loop verification diagnostic provides a means of verifying the analog output loop is functioning properly. This is a manually initiated diagnostic test. This diagnostic checks the integrity of the analog loop and provides a health status of the circuit. If the verification does not pass, this will be highlighted in the results given at the end of the check.

The 4-20 mA loop verification diagnostic is useful for testing the analog output when errors are suspected. The diagnostic tests the analog loop at five different mA output levels:

- 4 mA
- 12 mA
- 20 mA
- Low alarm level
- High alarm level

### 9.8.1 Initiating 4-20 mA loop verification

| | |
|---|---|
| LOI menu path | **Diagnostics → Advanced Diag → 4-20mA Verify → 4-20mA Verify** |

The 4–20 mA loop verification diagnostic can be initiated as required by the application. If Smart Meter Verification Professional (DS1 Option) was ordered, then the 4–20 mA loop verification diagnostic will be available. If DA2 was not ordered or licensed, this diagnostic is not available.

### 9.8.2 4-20 mA loop verification parameters

The 4-20 mA loop verification diagnostic has five read-only parameters plus an overall test result. It does not have any configurable parameters.

#### 4-20 mA loop verification test result

| | |
|---|---|
| LOI menu path | **Diagnostics → Advanced Diag → 4-20mA Verify → View Results** |

Shows the results of the 4-20 mA loop verification test as either passed or failed.

### 4 mA measurement

| | |
|---|---|
| LOI menu path | N/A |

Shows the measured value of the 4 mA loop verification test.

### 12 mA measurement

| | |
|---|---|
| LOI menu path | N/A |

Shows the measured value of the 12 mA loop verification test.

### 20 mA measurement

| | |
|---|---|
| LOI menu path | N/A |

Shows the measured value of the 20 mA loop verification test.

### Low alarm measurement

| | |
|---|---|
| LOI menu path | N/A |

Shows the measured value of the low alarm verification test.

### High alarm measurement

| | |
|---|---|
| LOI menu path | N/A |

Shows the measured value of the high alarm verification test.

## 9.9 Smart Meter Verification

The Smart Meter Verification diagnostic provides a means of verifying the flowmeter is within calibration without removing the sensor from the process. This diagnostic test provides a review of the transmitter and sensor's critical parameters as a means to document verification of calibration. The results of this diagnostic provide the deviation amount from expected values and a pass/fail summary against user-defined criteria for the application and conditions. The Smart Meter Verification diagnostic can be configured to run continuously in the background during normal operation, or it can be manually initiated as required by the application.

## 9.9.1 Sensor baseline parameters

The Smart Meter Verification diagnostic functions by taking a baseline sensor signature and then comparing measurements taken during the verification test to these baseline results.

The sensor signature describes the magnetic behavior of the sensor. Based on Faraday's law, the induced voltage measured on the electrodes is proportional to the magnetic field strength. Thus, any changes in the magnetic field will result in a calibration shift of the sensor. Having the transmitter take an initial sensor signature when first installed will provide the baseline for the verification tests that are done in the future. There are three specific measurements that are stored in the transmitter's non-volatile memory that are used when performing the calibration verification.

### Coil circuit resistance

| | |
|---|---|
| LOI menu path | **Diagnostics → Advanced Diag → Meter Verif → Sensr Baseline → Values → Coil Resist** |

The coil resistance is a measurement of the coil circuit health. This value is used as a baseline to determine if the coil circuit is still operating correctly.

### Coil inductance (signature)

| | |
|---|---|
| LOI menu path | **Diagnostics → Advanced Diag → Meter Verif → Sensr Baseline → Values → Coil Inductnce** |

The coil inductance is a measurement of the magnetic field strength. This value is used as a baseline to determine if a sensor calibration shift has occurred.

### Electrode circuit resistance

| | |
|---|---|
| LOI menu path | **Diagnostics → Advanced Diag → Meter Verif → Sensr Baseline → Values → Electrode Res** |

The electrode circuit resistance is a measurement of the electrode circuit health. This value is used as a baseline to determine if the electrode circuit is still operating correctly.

## 9.9.2 Establishing the sensor baseline

The first step in running the Smart Meter Verification test is establishing the reference baseline that the test will use as the baseline for comparison. This is accomplished by having the transmitter take a baseline of the sensor.

#### Reset baseline (re-signature meter)

| | |
|---|---|
| LOI menu path | **Diagnostics → Advanced Diag → Meter Verif → Sensr Baseline → Reset Baseline** |

Having the transmitter take an initial sensor baseline when first installed will provide the comparison point for the verification tests that are done in the future. The sensor baseline should be taken during the start-up process when the transmitter is first connected to the sensor, with a full line, and ideally with no flow in the line. Running the sensor baseline procedure when there is flow in the line is permissible, but this may introduce some noise into the electrode circuit resistance measurement. If an empty pipe condition exists, then the sensor baseline should only be run for the coils.

**Note**
For high temperature applications, it is a best practice to take the sensor baseline when the process fluid and sensor have reached their normal operating temperature if that will be operating condition during test measurements.

Once the sensor baseline process is complete, the measurements taken during this procedure are stored in non-volatile memory to prevent loss in the event of a power interruption to the meter. This initial sensor signature is required for both manual and continuous Smart Meter Verification.

#### Recall values (recall last saved)

| | |
|---|---|
| LOI menu path | **Diagnostics → Advanced Diag → Meter Verif → Sensr Baseline → Recall Values** |

In the event that the sensor baseline was reset accidentally or incorrectly, this function will restore the previously saved sensor baseline values.

### 9.9.3 Smart Meter Verification test criteria

The Smart Meter Verification diagnostic provides the ability to customize the test criteria to which the verification must be tested. The test criteria can be set for each of the flow conditions discussed above.

#### No flow limit

| | |
|---|---|
| LOI menu path | **Diagnostics → Advanced Diag → Meter Verif → Test Criteria → No Flow** |

Set the test criteria for the no flow condition. The factory default for this value is set to five percent with limits configurable between one and ten percent. This parameter applies to manually initiated test only.

#### Flowing full limit

| | |
|---|---|
| LOI menu path | **Diagnostics → Advanced Diag → Meter Verif → Test Criteria → Flowing, Full** |

Set the test criteria for the flowing, full condition. The factory default for this value is set to five percent with limits configurable between one and ten percent. This parameter applies to manually initiated tests only.

### Empty pipe limit

| | |
|---|---|
| LOI menu path | **Diagnostics** → **Advanced Diag** → **Meter Verif** → **Test Criteria** → **Empty Pipe** |

Set the test criteria for the empty pipe condition. The factory default for this value is set to five percent with limits configurable between one and ten percent. This parameter applies to manually initiated test only.

### Continuous limit

| | |
|---|---|
| LOI menu path | **Diagnostics** → **Advanced Diag** → **Meter Verif** → **Test Criteria** → **Continual** |

Set the test criteria for the continuous Smart Meter Verification diagnostic. The factory default for this value is set to five percent with limits configurable between two and ten percent. If the tolerance band is set too tightly, under empty pipe conditions or noisy flowing conditions, a false failure of the transmitter test may occur.

## 9.10 Run commanded Smart Meter Verification

| | |
|---|---|
| LOI menu path | **Diagnostics** → **Advanced Diag** → **Meter Verif** → **Run Meter Ver** |

The Smart Meter Verification diagnostic will be available if the Smart Meter Verification Professional (DA2) was ordered. If DA2 was not ordered or licensed, this diagnostic will not be available. This method will initiate the commanded meter verification test.

### 9.10.1 Test conditions

| | |
|---|---|
| LOI menu path | **Diagnostics** → **Advanced Diag** → **Meter Verif** → **Run Meter Ver** → **Test Condition** |

Smart Meter Verification can be initiated under three possible test conditions. This parameter is set at the time that the sensor baseline or Smart Meter Verification test is manually initiated.

**No flow** Run the Smart Meter Verification test with a full pipe and no flow in the line. Running the Smart Meter Verification test under this condition provides the most accurate results and the best indication of magnetic flowmeter health.

**Flowing full** Run the Smart Meter Verification test with a full pipe and flow in the line. Running the Smart Meter Verification test under this condition provides the ability to verify the magnetic flowmeter health without shutting down the process flow in applications when a shutdown is not possible. Running the diagnostic under flowing conditions can cause a false test failure if there is significant process noise present.

**Empty pipe** Run the Smart Meter Verification test with an empty pipe. Running the Smart Meter Verification test under this condition provides the ability to verify the magnetic flowmeter health with an empty pipe. Running the verification diagnostic under empty pipe conditions will not check the electrode circuit health.

### 9.10.2 Test scope

| | |
|---|---|
| LOI menu path | **Diagnostics → Advanced Diag → Meter Verif → Run Meter Ver → Test Scope** |

The commanded Smart Meter Verification test can be used to verify the entire flowmeter installation or individual parts such as the transmitter or sensor. This parameter is set at the time that the Smart Meter Verification test is manually initiated. There are three test scopes from which to choose.

**All** Run the Smart Meter Verification test and verify the entire flowmeter installation. This parameter results in the diagnostic performing the transmitter calibration verification, sensor calibration verification, coil health check, and electrode health check. Transmitter calibration and sensor calibration are verified to the percentage associated with the test condition selected when the test was initiated. This setting applies to manually initiated tests only.

**Transmitter** Run the Smart Meter Verification test on the transmitter only. This results in the verification test only checking the transmitter calibration to the limits of the test criteria selected when the verification test was initiated. This setting applies to manually initiated tests only.

**Sensor (coils and electrodes)** Run the Smart Meter Verification test on the sensor only. This results in the verification test checking the sensor calibration to the limits of the test criteria selected when the Smart Meter Verification test was initiated, verifying the coil circuit health, and the electrode circuit health. This setting applies to manually initiated tests only.

## 9.11 Continuous Smart Meter Verification

Continuous Smart Meter Verification can be used to monitor and verify the health of the flowmeter system. The continuous Smart Meter Verification will not report results until 30 minutes after powering up to ensure the system is stable and to avoid false failures.

### 9.11.1 Test scope

Continuous Smart Meter Verification can be configured to monitor the sensor coils, electrodes, analog output, and transmitter calibration, All of these parameters can be individually enabled or disabled. These parameters apply to continuous Smart Meter Verification only.

#### Coils

| | |
|---|---|
| LOI menu path | **Diagnostics → Diag Controls → Cont Meter Ver → Coils** |

Continuously monitor the sensor coil circuit by enabling this continuous Smart Meter Verification parameter.

#### Electrodes

| | |
|---|---|
| LOI menu path | **Diagnostics → Diag Controls → Cont Meter Ver → Electrodes** |

Continuously monitor the electrode resistance by enabling this continuous Smart Meter Verification parameter.

### Transmitter

| | |
|---|---|
| LOI menu path | **Diagnostics → Diag Controls → Cont Meter Ver → Transmitter** |

Continuously monitor the transmitter calibration by enabling this continuous Smart Meter Verification parameter.

### Analog output

| | |
|---|---|
| LOI menu path | **Diagnostics → Diag Controls → Cont Meter Ver → Analog Output** |

Continuously monitor the analog output signal by enabling this continuous Smart Meter Verification parameter.

## 9.12 Smart Meter Verification test results

If the Smart Meter Verification test is initiated by command, the transmitter will make several measurements to verify the transmitter calibration, sensor calibration, coil circuit health, and electrode circuits health. The results of these tests can be reviewed and recorded on the Table 9-3 form. Print the "Commanded Calibration Verification Results" form and enter the test results as you view them. The completed form can be used to validate that the meter is within the required calibration limits to comply with governmental regulatory agencies.

Depending on the method used to view the results, they will be displayed in either a menu structure, as a method, or in the report format. When using the LOI, the parameters are viewed as a method using the left arrow key to cycle through the results.

**Table 9-3: Manual Smart Meter Verification Test Parameters**

| | Parameter | LOI menu path (Diagnostics → Variables → MV Results → Manual Results) |
|---|---|---|
| 1 | Test Condition | Test Condition |
| 2 | Test Criteria | Test Criteria |
| 3 | 8714 Test Result | MV Results |
| 4 | Simulated Velocity | Sim Velocity |
| 5 | Actual Velocity | ActualVelocity |
| 6 | Velocity Deviation | Flow Sim Dev |
| 7 | Xmtr Cal Test Result | Xmtr Cal Verify |
| 8 | Sensor Cal Deviation | Sensor Cal Dev |
| 9 | Sensor Cal Test Result | Sensor Cal |
| 10 | Coil Circuit Test Result | Coil Circuit |
| 11 | Electrode Circuit Test Result | Electrode Ckt |

**Table 9-4: Continuous Smart Meter Verification Test Parameters**

| | Parameter | LOI menu path (Diagnostics → Variables → MV Results → Continual Res) |
|---|---|---|
| 1 | Continuous Limit | Test Criteria |
| 2 | Simulated Velocity | Sim Velocity |
| 3 | Actual Velocity | ActualVelocity |
| 4 | Velocity Deviation | Flow Sim Dev |
| 5 | Coil Signature | Coil Inductnce |
| 6 | Sensor Cal Deviation | Sensor Cal Dev |
| 7 | Coil Resistance | Coil Resist |
| 8 | Electrode Resistance | Electrode Res |
| 9 | mA Expected | 4–20 mA Expect |
| 10 | mA Actual | 4–20 mA Actual |
| 11 | mA Deviation | AO FB Dev |

# 9.13 Smart Meter Verification measurements

The Smart Meter Verification test will make measurements of the coil resistance, coil inductance, and electrode resistance and compare these values to the values taken during the sensor baseline process to determine the sensor calibration deviation, the coil circuit health, and the electrode circuit health. In addition, the measurements taken by this test can provide additional information when troubleshooting the meter.

### Coil circuit resistance

| | |
|---|---|
| LOI menu path | Manual: **Diagnostics → Advanced Diag → Meter Verif → Measurements → Manual Measure → Coil Resist**<br>Continuous: **Diagnostics → Advanced Diag → Meter Verif → Measurements → Continual Meas → Coil Resist** |

The coil circuit resistance is a measurement of the coil circuit health. This value is compared to the coil circuit resistance signature measurement taken during the sensor baseline process to determine coil circuit health. This value can be continuously monitored using continuous Smart Meter Verification.

### Coil inductance (signature)

| | |
|---|---|
| LOI menu path | Manual: **Diagnostics → Advanced Diag → Meter Verif → Measurements → Manual Measure → Coil Inductance**<br>Continuous: **Diagnostics → Advanced Diag → Meter Verif → Measurements → Continual Meas → Coil Inductance** |

The coil inductance is a measurement of the magnetic field strength. This value is compared to the coil inductance signature measurement taken during the sensor baseline process to determine sensor calibration deviation. This value can be continuously monitored using continuous Smart Meter Verification.

### Electrode circuit resistance

| | |
|---|---|
| LOI menu path | Manual: **Diagnostics** → **Advanced Diag** → **Meter Verif** → **Measurements** → **Manual Measure** → **Electrode Res**<br>Continuous: **Diagnostics** → **Advanced Diag** → **Meter Verif** → **Measurements** → **Continual Meas** → **Electrode Res** |

The electrode circuit resistance is a measurement of the electrode circuit health. This value is compared to the electrode circuit resistance signature measurement taken during the sensor baseline process to determine electrode circuit health. This value can be continuously monitored using continuous Smart Meter Verification.

### Actual velocity

| | |
|---|---|
| LOI menu path | Manual: **Diagnostics** → **Advanced Diag** → **Meter Verif** → **Measurements** → **Manual Measure** → **ActualVelocity**<br>Continuous: **Diagnostics** → **Advanced Diag** → **Meter Verif** → **Measurements** → **Continual Meas** → **ActualVelocity** |

The actual velocity is a measurement of the simulated velocity signal. This value is compared to the simulated velocity to determine transmitter calibration deviation. This value can be continuously monitored using continuous Smart Meter Verification.

### Flow simulation deviation

| | |
|---|---|
| LOI menu path | Manual: → **Diagnostics** → **Variables** → **MV Results** → **Manual Results** → **Flow Sim Dev**<br>Continuous: → **Diagnostics** → **Variables** → **MV Results** → **Continual Res** → **Flow Sim Dev** |

The flow simulation deviation is a measurement of the percent difference between the simulated velocity and the actual measured velocity from the transmitter calibration verification test. This value can be continuously monitored using continuous Smart Meter Verification.

### 4-20 mA expected value

| | |
|---|---|
| LOI menu path | Manual: **Diagnostics** → **Advanced Diag** → **4-20 mA Verify** → **View Results** |
| | Continuous: **Diagnostics** → **Advanced Diag** → **Meter Verif** → **Measurements** → **Continual Meas** → **4-20 mA Expect** |

The 4-20 mA expected value is the simulated analog signal used for the 4-20 mA meter verification test. This value is compared to the actual analog signal to determine analog output deviation. This value can be continuously monitored using continuous Smart Meter Verification.

### 4-20 mA actual value

| | |
|---|---|
| LOI menu path | Manual: **Diagnostics** → **Advanced Diag** → **4-20 mA Verify** → **View Results**<br>Continuous: **Diagnostics** → **Advanced Diag** → **Meter Verif** → **Measurements** → **Continual Meas** → **4-20 mA Actual** |

The 4-20 mA actual value is the measured analog signal used for the 4-20 mA meter verification test. This value is compared to the simulated analog signal to determine analog output deviation. This value can be continuously monitored using continuous Smart Meter Verification.

#### 4-20 mA deviation

| | |
|---|---|
| LOI menu path | Manual: **Diagnostics → Advanced Diag, → 4-20 mA Verify → View Results**<br>Continuous: **Diagnostics → Advanced Diag → Meter Verif → Measurements → Continual Meas → AO FB Dev** |

The 4-20 mA deviation is a measurement of the percent difference between the simulated analog signal and the actual measured analog signal from the analog output verification test. This value can be continuously monitored using continuous Smart Meter Verification.

## 9.14 Optimizing the Smart Meter Verification

The Smart Meter Verification diagnostic can be optimized by setting the test criteria to the desired levels necessary to meet the compliance requirements of the application. The following examples below will provide some guidance on how to set these levels.

**Example 1** An effluent meter must be certified annually to comply with environmental regulations. This example regulation requires that the meter be certified to five percent. Since this is an effluent meter, shutting down the process may not be viable. In this instance the Smart Meter Verification test will be performed under flowing conditions. Set the test criteria for flowing, full to five percent to meet the requirements of the governmental agencies.

**Example 2** A pharmaceutical company requires bi-annual verification of meter calibration on a critical feed line for one of their products. This is an internal standard, and the plant requires a calibration record be kept on-hand. Meter calibration on this process must meet two percent. The process is a batch process so it is possible to perform the calibration verification with the line full and with no flow. Since the Smart Meter Verification test can be run under no flow conditions, set the test criteria for no flow to two percent to comply with the necessary plant standards.

**Example 3** A food and beverage company requires an annual calibration of a meter on a product line. The plant standard calls for the accuracy to be three percent or better. They manufacture this product in batches, and the measurement cannot be interrupted when a batch is in process. When the batch is complete, the line goes empty. Since there is no means of performing the Smart Meter Verification test while there is product in the line, the test must be performed under empty pipe conditions. The test criteria for empty pipe should be set to three percent, and it should be noted that the electrode circuit health cannot be verified.

### 9.14.1 Optimizing continuous Smart Meter Verification

For continuous Smart Meter Verification, there is only one test criteria value to configure, and it will be used for all flow conditions. The factory default is set to five percent to minimize the potential for false failures under empty pipe conditions. For best results, set the criteria to match the maximum value of the three test criteria set during commanded meter verification (no flow, flowing full, and empty pipe).

For example, a plant might set the following commanded meter verification test criteria: two percent for no flow, three percent for flowing full, and four percent for empty pipe. In this case, the maximum test criterion is four percent, so the test criteria for continuous Smart Meter Verification should be set to four percent. If the tolerance band is set too tightly, under empty pipe conditions or noisy flowing conditions, a false failure of the transmitter test may occur.

### Manual Calibration Verification Results

| | |
|---|---|
| Report parameters | |
| User Name:<br>_____ | Calibration Conditions: ❑ Internal ❑ External |
| Tag<br>#:_____ | Test Conditions: ❑ Flowing ❑ No Flow, Full Pipe<br>❑ Empty Pipe |
| Flowmeter information and configuration | |
| Software Tag: | PV URV (20 mA<br>scale):_____ |
| Calibration Number: | PV LRV (4 mA<br>scale):_____ |
| Line Size: | PV<br>Damping:_____ |
| Transmitter calibration verification results | Sensor calibration verification results |
| Simulated Velocity: | Sensor Deviation<br>%:_____ |
| Actual Velocity: | Sensor Test:<br>❑ PASS / ❑ FAIL / ❑ NOT TESTED |
| Deviation %: | Coil Circuit Test:<br>❑ PASS / ❑ FAIL / ❑ NOT TESTED |
| Transmitter:<br>❑ PASS / ❑ FAIL / ❑ NOT TESTED | Electrode Circuit Test:<br>❑ PASS / ❑ FAIL / ❑ NOT TESTED |
| Summary of Calibration Verification results | |
| Verification Results: The result of the flowmeter verification test is: ❑ PASSED / ❑ FAILED | |
| Verification Criteria: This meter was verified to be functioning within _____ % of deviation from the original test parameters. | |
| Signature:_____ | Date:_____ |

# 10 Digital Signal Processing

## 10.1 Introduction

Magmeters are used in applications that can create noisy flow readings. The transmitter has the capability to deal with difficult applications that have previously manifested themselves in a noisy output signal. In addition to selecting a higher coil drive frequency (37 Hz vs. 5 Hz) to isolate the flow signal from the process noise, the microprocessor has digital signal processing that is capable of rejecting the noise specific to the application. This section explains the different types of process noise, provides instructions for optimizing the flow reading in noisy applications, and provides a detailed description of the digital signal processing functionality.

## 10.2 Process noise profiles

### 1/f noise

This type of noise has higher amplitudes at lower frequencies, but generally degrades over increasing frequencies. Potential sources of 1/f noise include chemical mixing and slurry flow particles rubbing against the electrodes.

### Spike noise

This type of noise generally results in a high amplitude signal at specific frequencies, which can vary depending on the source of the noise. Common sources of spike noise include chemical injections directly upstream of the flowmeter, hydraulic pumps, and slurry flows with low concentrations of particles in the stream. The particles bounce on the electrode generating a “spike” in the electrode signal. An example of this type of flow stream would be a recycle flow in a paper mill.

### White noise

This type of noise results in a high amplitude signal that is relatively constant over the frequency range. Common sources of white noise include chemical reactions or mixing that occurs as the fluid passes through the flow meter and high concentration slurry flows where the particulates are constantly passing over the electrode head. An example of this type of flow stream would be a basis weight stream in a paper mill.

## 10.3 High process noise diagnostic

The transmitter continuously monitors signal amplitudes over a wide range of frequencies. For the high process noise diagnostic, the transmitter specifically looks at the noise amplitude adjacent to the Low and High coil drive frequencies. The noise values are used to calculate a signal-to-noise ratio for both drive frequencies. If the signal-to-noise ratio is less than 25 at the currently selected coil drive frequency, the high process noise diagnostic will trip, indicating that the flow signal may be compromised.

### Related information

High process noise detection

# 10.4 Optimizing flow reading in noisy applications

If the flow reading is unstable, first check the wiring, grounding, and process reference associated with the magnetic flowmeter system. Ensure that the following conditions are met:

- Ground straps are attached to the adjacent flange or ground ring
- Grounding rings, lining protectors, or a process reference electrode are being used in lined or non-conductive piping

The causes of unstable transmitter output can usually be traced to extraneous voltages on the measuring electrodes. This “process noise” can arise from several causes including electrochemical reactions between the fluid and the electrode, chemical reactions in the process itself, free ion activity in the fluid, or some other disturbance of the fluid/electrode capacitive layer. In such noisy applications, an analysis of the frequency spectrum reveals process noise that typically becomes significant below 15 Hz.

In some cases, the effects of process noise may be sharply reduced by elevating the coil drive frequency above the 15 Hz region. Coil drive mode is selectable between the standard 5 Hz and the noise-reducing 37 Hz.

## 10.4.1 Coil drive frequency

| | |
|---|---|
| LOI menu path | **Detailed Setup → Additional Params → Coil Drive Freq** |

This parameter changes the pulse rate of the magnetic coils.

#### 5 Hz

The standard coil drive frequency is 5 Hz, which is sufficient for nearly all applications.

#### 37 Hz

If the process fluid causes a noisy or unstable flow reading, increase the coil drive frequency to 37 Hz. If the 37 Hz mode is selected, perform the auto zero function for optimum performance.

**Note**
37 Hz coil drive frequency mode should not be used for sensors larger than 20-inch.

## 10.4.2 Auto zero

| | |
|---|---|
| LOI menu path | **Diagnostics → Trims → Auto Zero** |

To ensure optimum accuracy when using 37 Hz coil drive mode, there is an auto zero function that should be initiated. When using 37 Hz coil drive mode it is important to zero the system for the specific application and installation.

The auto zero procedure should be performed only under the following conditions:

- With the transmitter and sensor installed in their final positions. This procedure is not applicable on the bench.
- With the transmitter in 37 Hz coil drive mode. Never attempt this procedure with the transmitter in 5 Hz coil drive mode.
- With the sensor full of process fluid at zero flow.

These conditions should cause an output equivalent to zero flow.

Set the loop to manual if necessary and begin the auto zero procedure. The transmitter completes the procedure automatically in about 90 seconds. A clock symbol will appear in the lower right-hand corner of the display to indicate that the procedure is running.

**Note**
Failure to complete an auto zero may result in a flow velocity error of 5 to10% at1 ft/s (0.3 m/s). While the output level will be offset by the error, the repeatability will not be affected.

## 10.4.3 Other signal processing tools

The transmitter contains several advanced functions that can be used to stabilize erratic outputs caused by process noise. The signal processing menu contains this functionality. If the 37 Hz coil drive frequency has been set, and the output is still unstable, the damping and signal processing function should be used. It is important to set the coil drive frequency to 37 Hz to increase the flow sampling rate. The transmitter provides an easy and straightforward start-up, and also incorporates the capability to deal with difficult applications that have previously manifested themselves in a noisy output signal. In addition to selecting a higher coil drive frequency (37 Hz vs. 5 Hz) to isolate the flow signal from the process noise, the microprocessor can scrutinize each input based on three user-defined parameters to reject the noise specific to the application.

### Operating mode

| | |
|---|---|
| LOI menu path | **Detailed Setup → Signal Processing → Operating Mode** |

The operating mode should be used only when the signal is noisy and gives an unstable output. Filter mode automatically uses 37 Hz coil drive mode and activates signal processing at the factory set default values. When using filter mode, perform an auto zero with no flow and a full sensor. Either of the parameters, coil drive mode or signal processing, may still be changed individually. Turning signal processing off or changing the coil drive frequency to 5 Hz will automatically change the operating mode from filter mode to normal mode. This software technique, known as signal processing, “qualifies” individual flow signals based on historic flow information and three user-definable parameters, plus an on/off control. These parameters are described below.

### Status

| | |
|---|---|
| LOI menu path | **Detailed Setup → Signal Processing → Main Config DSP → Status** |

Enable or disable the DSP capabilities. When ON is selected, the output is derived using a running average of the individual flow inputs. Signal processing is a software algorithm that examines the quality of the electrode signal against user-specified tolerances. The three parameters that make up signal processing (number of samples, maximum percent limit, and time limit) are described below.

### Number of samples

| | |
|---|---|
| LOI menu path | **Detailed Setup → Signal Processing → Main Config DSP → Samples** |

The number of samples sets the amount of time that inputs are collected and used to calculate the average value. Each second is divided into tenths with the number of samples equaling the number of increments used to calculate the average. This parameter can be configured for an integer value between 1 and 125. The default value is 90 samples.

For example:

- A value of 1 averages the inputs over the past $^{1}/_{10}$ second

- A value of 10 averages the inputs over the past 1 second
- A value of 100 averages the inputs over the past 10 seconds
- A value of 125 averages the inputs over the past 12.5 seconds

### Percent limit

| | |
|---|---|
| LOI menu path | **Detailed Setup → Signal Processing → Main Config DSP → % Limit** |

This parameter will set the tolerance band on either side of the running average, referring to percent deviation from the average. Values within the limit are accepted while value outside the limit are scrutinized to determine if they are a noise spike or an actual flow change. This parameter can be configured for an integer value between 0 and 100 percent. The default value is 2 percent.

### Time limit

| | |
|---|---|
| LOI menu path | **Detailed Setup → Signal Processing → Main Config DSP → Time Limit** |

The time limit parameter forces the output and running average values to the new value of an actual flow rate change that is outside the percent limit boundaries. It thereby limits response time to flow changes to the time limit value rather than the length of the running average. If the number of samples selected is 100, then the response time of the system is 10 seconds. In some cases this may be unacceptable. Setting the time limit forces the transmitter to clear the value of the running average and re-establish the output and average at the new flow rate once the time limit has elapsed. This parameter limits the response time added to the loop. A suggested time limit value of two seconds is a good starting point for most applicable process fluids. This parameter can be configured for a value between 0.6 and 256 seconds. The default value is 2 seconds.

## 10.5 Explanation of signal processing algorithm

An example plotting flow rate versus time is given below to help visualize the signal processing algorithm.

**Figure 10-1: Signal Processing Functionality**

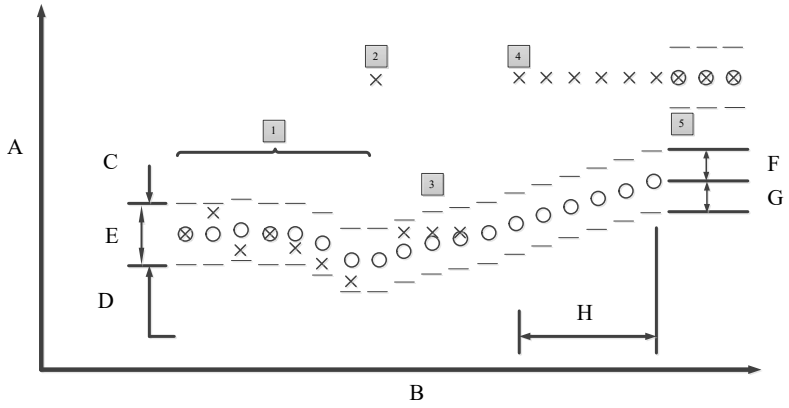


*A. Flow rate*
*B. Time (10 samples = 1 second)*
*C. Upper value*
*D. Lower value*
*E. Tolerance band*
*F. Maximum percent limit*
*G. Minimum percent limit*
*H. Time limit*

- X = Input flow signal from sensor
- O = Average flow signals and transmitter output, determined by the number of samples parameter
- Tolerance band, determined by the percent limit parameter
- Upper value = average flow + [(percent limit/100) average flow]
- Lower value = average flow - [(percent limit/100) average flow]

1. This scenario is that of a typical non-noisy flow. The input flow signal is within the percent limit tolerance band, therefore qualifying itself as a good input. In this case the new input is added directly into the running average and is passed on as a part of the average value to the output.
2. This signal is outside the tolerance band and therefore is held in memory until the next input can be evaluated. The running average is provided as the output.
3. The previous signal currently held in memory is simply rejected as a noise spike since the next flow input signal is back within the tolerance band. This results in complete rejection of noise spikes rather than allowing them to be “averaged” with the good signals as occurs in the typical damping circuits.
4. As in number 2 above, the input is outside the tolerance band. This first signal is held in memory and compared to the next signal. The next signal is also outside the tolerance band (in the same direction), so the stored value is added to the running average as the next input and the running average begins to slowly approach the new input level.
5. To avoid waiting for the slowly incrementing average value to catch up to the new level input, an algorithm is provided. This is the “time limit” parameter. The user

can set this parameter to eliminate the slow ramping of the output toward the new input level.

# 11 Maintenance

## 11.1 Introduction

This section covers basic transmitter maintenance. Instructions and procedures in this section may require special precautions to ensure the safety of the personnel performing the operations. Read the following safety messages before performing any operation described in this section. Refer to these warnings when appropriate throughout this section.

## 11.2 Safety information

**⚠ WARNING**

Failure to follow these maintenance guidelines could result in death or serious injury.

- Installation and servicing instructions should be performed by qualified personnel only.
- Do not perform any servicing other than that contained in the operating instructions.
- Verify the operating environment of the sensor and transmitter is consistent with the appropriate hazardous area approval.
- Do not connect the transmitter to a non-Rosemount sensor that is located in an explosive atmosphere.
- Mishandling products exposed to a hazardous substance may result in death or serious injury.
- If the product being returned was exposed to a hazardous substance as defined by OSHA, a copy of the required Material Safety Data Sheet (MSDS) for each hazardous substance identified must be included with the returned goods.

# 11.3 Installing a LOI/Display

**Figure 11-1: Cover assembly with LOI/Display**

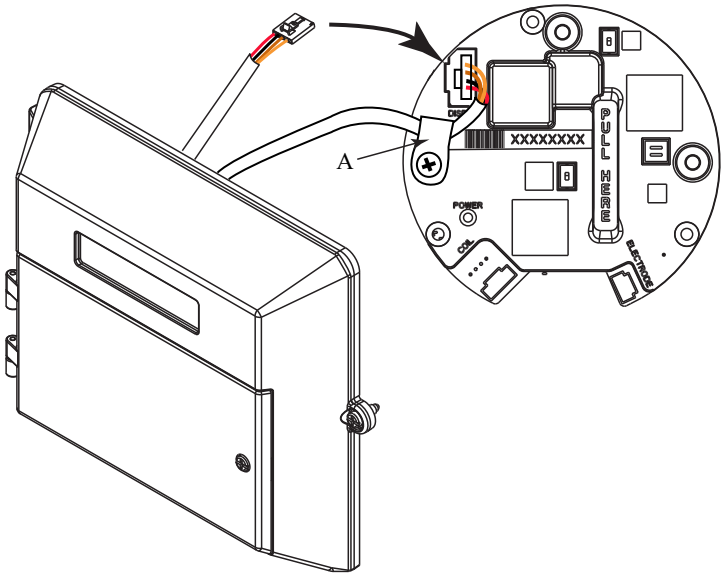


*A. Wire clamp*

## Procedure

1. If the transmitter is installed in a control loop, secure the loop.
2. Remove power from the transmitter.
3. Loosen the upper door screw and open the top electronics compartment of the transmitter housing.

   **Note**
   See Powering the transmitter for details on the covers.

4. Remove the existing blind door by lifting it up and away from the transmitter housing.
5. Align the new LOI/Display door pins with the transmitter hinges and install the new door by pushing it down towards the transmitter housing.
6. Plug the serial connector from the back of the LOI/Display into the receptacle on the electronics stack.
7. Once the serial connector is installed into the electronics stack, install the wire clamp around the cable, and securely tighten the screw, washers, and wire clamp into the left post (9 o'clock position) of the plastic board stack shroud. The wire should be routed on the connector side of this post.
8. Close the upper compartment door and tighten the upper door screw to ensure the housing is properly sealed to meet ingress protection requirements. Return power to the transmitter and verify that it is functioning correctly and reporting the expected flow rate.
9. If installed in a control loop, return the loop to automatic control.

# 11.4 Replacing electronics stack

### Prerequisites

Make sure that the replacement board stack matches the existing stack. There are two ways to make sure:

- Look at the complete transmitter model number. Current (Revision 4) electronics are only compatible with Models 8712E**M**. If your transmitter model number as shown on the model number tag is not 8712EM, you cannot use a Revision 4 board stack.
- Visually inspect the existing and new electronics stacks to ensure that they are physically alike. The older version of the electronics stack was rectangular; the current (Revision 4) electronics stack is circular, as shown in Figure 11-2.

**Note**
You must open the transmitter housing to inspect the electronics stack (steps Step 1 through Step 3 below). Follow all applicable safety procedures and see Powering the transmitter for details on the covers.

**Figure 11-2: Revision 4 electronics stack**




### Procedure

1. If the transmitter is installed in a control loop, secure the loop.
2. Remove power from the transmitter.
3. Loosen the upper door screw and open the top electronics compartment of the transmitter housing.

**Note**
See Powering the transmitter for details on the covers.

4. Carefully unplug each of the connectors from the top of the electronics stack: LOI/Display (if equipped), coil, and electrode.
5. Remove the three screws that secure the electronics stack into the housing.
6. Carefully pull out the electronics stack by the handle marked **PULL HERE**.
7. Remove the screws from the old electronics stack and insert them into the new electronics stack.
8. Hold the new electronics stack by the handle and carefully insert it into the housing, making certain that the screw holes and electrical connectors are in proper alignment to seat the stack.
9. Securely tighten the three electronics stack screws into the housing.
10. Plug in each of the connectors from the top of the electronics stack: LOI/Display (if equipped), coil, and electrode.
11. Close the upper compartment door and tighten the upper door screw to ensure the housing is properly sealed to meet ingress protection requirements.
12. Return power to the transmitter and verify that it is functioning correctly and reporting the expected flow rate.
13. If installed in a control loop, return the loop to automatic control.

## 11.5 Replacing a terminal block socket module

### Prerequisites

**Note**
This section only applies to sensors with Kx approval codes.

The terminal block socket module is shown in Figure 11-3. To gain access to the socket module, remove the junction box from the sensor adapter.

**Figure 11-3: Socket Module—Terminal Block**

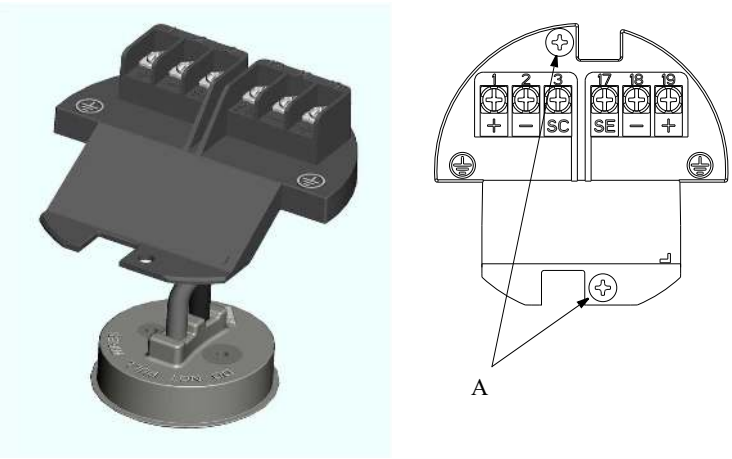


A. *Mounting screws:*
   - *2X—standard*
   - *4X—with I.S. divider*

### 11.5.1 Removing a terminal block socket module

**Procedure**

1. Disconnect power to the transmitter and the remote cabling connected to the terminal block.
2. Remove the junction box cover to gain access to the remote cabling.
3. To disconnect the terminal block from the junction box housing, remove the two mounting screws and the two divider mounting screws (if applicable).
4. Pull up on the terminal block to expose the socket module base.
5. To remove the socket module, loosen the two mounting screws and pull up on the socket module from the base.
6. When removing the socket module, do not pull on the wires.

### 11.5.2 Installing a terminal block socket module

**Procedure**

1. Insert the new terminal block socket module, press the base into its keyed position, and tighten the two mounting screws.
2. Connect the terminal block to the junction box housing by tightening the two mounting screws.

   Install the divider with the two mounting screws if applicable.
3. Reconnect remote cabling and power and replace junction box cover.

## 11.6 Replacing a terminal block with amp clips

**Note**
This section applies only to sensors with Nx approval codes or no hazardous area approval code for use in ordinary locations.

**Figure 11-4: Terminal block with amp clips**

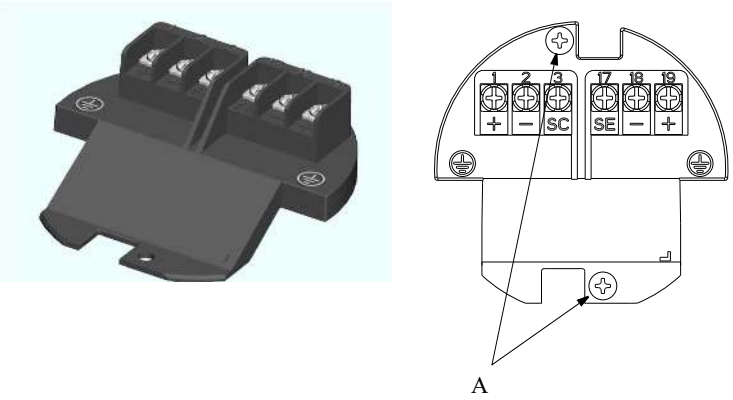


*A. Mounting screws:*
- *2X—standard*
- *4X—with I.S. divider*

## 11.6.1 Removing a terminal block

**Procedure**

1. Disconnect power to the transmitter.
2. Remove the junction box cover on the sensor to gain access to the remote cabling and disconnect the remote cabling connected to the terminal block.
3. To disconnect the terminal block from the junction box housing, remove the two mounting screws and the two divider mounting screws (if applicable).
4. Pull up on the terminal block to expose the connecting wires.
5. To remove the terminal block, unclip both wire connectors.

## 11.6.2 Installing a terminal block

**Procedure**

1. Clip the connecting wires to the back of the terminal block, the clips are different sizes and must be connected to their matching receptacle.
2. Connect the terminal block to the junction box housing by tightening the two mounting screws. Install the divider with the two mounting screws if applicable.
3. Reconnect remote cabling, replace the junction box cover on the sensor, and connect power.

# 11.7 Trims

| LOI menu path | **Diagnostics → Trims** |
|---|---|

Trims are used to calibrate the analog loop, calibrate the transmitter, re-zero the transmitter, and calibrate the transmitter with another manufacturer's sensor. Proceed with caution whenever performing a trim function.

## 11.7.1 D/A trim

| LOI menu path | **Diagnostics → Trims → D/A Trim** |
|---|---|

The D/A trim is used to calibrate the 4-20mA analog loop output from the transmitter. For maximum accuracy, the analog output should be trimmed for your system loop. Use the following steps to complete the output trim function.

### Procedure

1. Set the loop to manual, if necessary.
2. Connect a precision ammeter in the 4-20mA loop.
3. Initiate the D/A trim function with the LOI.
4. Enter the 4mA meter value when prompted.
5. Enter the 20mA meter value when prompted.
6. Return the loop to automatic control, if necessary.

The 4-20mA trim is now complete. The D/A trim can be repeated to check the results. Alternatively, the analog output test can also be used to verify loop performance.

## 11.7.2 Scaled D/A trim

| LOI menu path | **Diagnostics → Trims → Scaled D/A Trim** |
|---|---|

A scaled D/A trim enables calibration of the flowmeter analog output using a different scale than the standard 4-20mA output scale. Non-scaled D/A trimming (described above), is typically performed using an ammeter where calibration values are entered in units of milliamperes. Scaled D/A trimming enables trimming of the flowmeter using a scale that may be more convenient based upon the method of measurement.

For example, it may be more convenient to make current measurements by direct voltage readings across the loop resistor. If the loop resistor is 500 ohms, and calibration of the meter will be done using voltage measurements across this resistor, the trim points can be rescaled from 4-20mA to 4-20mA x 500 ohm or 2-10VDC. Once the scaled trim points have been entered as 2 and 10, calibration of the flowmeter can be done by entering voltage measurements directly from the voltmeter.

## 11.7.3 Digital trim

| LOI menu path | **Diagnostics → Trims → Digital Trim** |
|---|---|

Digital trim is the function by which the factory calibrates the transmitter. This procedure is rarely needed by users. It is only necessary if the transmitter is suspected to be no longer accurate. A Rosemount 8714D Calibration Standard is required to complete a digital trim. Attempting a digital trim without a Rosemount 8714D Calibration Standard may result in

an inaccurate transmitter or an error message. The digital trim must be performed with the coil drive mode set to 5Hz and with a nominal sensor calibration number stored in the memory.

**Note**
Attempting a digital trim without a Rosemount 8714D Calibration Standard may result in an inaccurate transmitter, or a "DIGITAL TRIM FAILURE" message may appear. If this message occurs, no values were changed in the transmitter. Simply cycle power on the transmitter to clear the message.

To simulate a nominal sensor with the Rosemount 8714D Calibration Standard, change/verify the following parameters in the transmitter:

- Calibration Number-1000015010000000
- Units-ft/s
- PV URV-20mA = 30.00 ft/s
- PV LRV-4mA = 0 ft/s
- Coil Drive Frequency-5Hz

Before changing any of the configuration parameters, be sure to record the original values so that the transmitter can be returned to the original configuration prior to being placed back into operation. Failure to return the settings to the original configuration will result in incorrect flow and totalizer readings.

The instructions for changing the calibration number, units, PV URV, and PV LRV are located in Basic Setup. Instructions for changing the coil drive frequency can be found on Coil drive frequency.

Set the loop to manual (if necessary) and then complete the following steps:

**Procedure**

1. Power down the transmitter.
2. Connect the transmitter to a Rosemount 8714D Calibration Standard.
3. Power up the transmitter with the Rosemount 8714D connected and read the flow rate.

   The electronics need about a 5-minute warm-up time to stabilize.
4. Set the 8714D Calibration Standard to the 30 ft/s (9.1 m/s) setting.
5. The flow rate reading after warm-up should be between 29.97 (9.1 m/s) and 30.03 ft/s (9.2 m/s).
6. If the reading is within the range, return the transmitter to the original configuration parameters.
7. If the reading is not within this range, initiate a digital trim.

   The digital trim takes about 90 seconds to complete. No transmitter adjustments are required.

## 11.7.4 37 Hz auto zero trim

To ensure optimum accuracy when using 37 Hz coil drive mode, there is an auto zero function that should be initiated. When using 37 Hz coil drive mode it is important to zero the system for the specific application and installation.

The auto zero procedure should be performed only under the following conditions:

- With the transmitter and sensor installed in their final positions. This procedure is not applicable on the bench.
- With the transmitter in 37 Hz coil drive mode. Never attempt this procedure with the transmitter in 5 Hz coil drive mode.
- With the sensor full of process fluid at zero flow.

These conditions should cause an output equivalent to zero flow.

Set the loop to manual if necessary and begin the auto zero procedure. The transmitter completes the procedure automatically in about 90 seconds. A clock symbol will appear in the lower right-hand corner of the display to indicate that the procedure is running.

**Note**
Failure to complete an auto zero may result in a flow velocity error of 5 to10% at1 ft/s (0.3 m/s). While the output level will be offset by the error, the repeatability will not be affected.

## 11.7.5 Universal trim

| | |
|---|---|
| LOI menu path | **Diagnostics** → **Trims** → **Universal Trim** |

The universal auto trim function enables the transmitter to calibrate sensors that were not calibrated at the factory. The function is activated as one step in a procedure known as in-process calibration. If a sensor has a 16-digit calibration number, in-process calibration is not required. If it does not, or if the sensor is made by another manufacturer, complete the following steps for in-process calibration. Refer to Implementing a Universal Transmitter.

**Procedure**

1. Determine the flow rate of the process fluid in the sensor.

   **Note**
   The flow rate in the line can be determined by using another sensor in the line, by counting the revolutions of a centrifugal pump, or by performing a bucket test to determine how fast a given volume is filled by the process fluid.

2. Complete the universal auto trim function.

When the routine is completed, the sensor is ready for use.

# 12 Troubleshooting

## 12.1 Introduction

This section covers basic transmitter and sensor troubleshooting. Problems in the magnetic flow meter system are usually indicated by incorrect output readings from the system, error messages, or failed tests. Consider all sources when identifying a problem in the system. If the problem persists, consult an Emerson Flow Representative to determine if the material should be returned to the factory. Emerson offers several diagnostics that aid in the troubleshooting process. Instructions and procedures in this section may require special precautions to ensure the safety of the personnel performing the operations. Read the following safety messages before performing any operation described in this section. Refer to these warnings when appropriate throughout this section.

The transmitter performs self-diagnostics on the entire magnetic flow meter system: the transmitter, the sensor, and the interconnecting wiring. By sequentially troubleshooting each individual piece of the system, it becomes easier to identify the problem and make the appropriate adjustments.

If there are problems with a new installation, see Installation check and guide below for a quick guide to solve the most common problems. For existing installations, Table 12-7 lists the most common problems and corrective actions.

## 12.2 Safety information

**⚠ WARNING**

Failure to follow these troubleshotting guidelines could result in death or serious injury.

- Installation and servicing instructions should be performed by qualified personnel only.
- Do not perform any servicing other than that contained in the operating instructions.
- Verify that the operating environment of the sensor and transmitter is consistent with the appropriate hazardous area approval.
- Do not connect the transmitter to a non-Rosemount sensor that is located in an explosive atmosphere.
- Mishandling products exposed to a hazardous substance may result in death or serious injury.
- If the product being returned was exposed to a hazardous substance as defined by OSHA, a copy of the required Material Safety Data Sheet (MSDS) for each hazardous substance identified must be included with the returned goods.

## 12.3 Installation check and guide

Use this guide to check new installations of Rosemount magnetic flowmeter systems that appear to malfunction.

## 12.3.1 Transmitter

### Checking the transmitter before applying power

#### Prerequisites

Before applying power to the magnetic flowmeter system, make the following transmitter checks:

#### Procedure

1. Record the transmitter model number and serial number.
2. Visually inspect the transmitter for any damage including the terminal block.
3. Verify the proper wiring connections have been made for the power and outputs.

### Checking the transmitter after applying power

#### Prerequisites

Apply power to the magnetic flowmeter system before making the following transmitter checks:

#### Procedure

1. Check for an active error message or status alert. Refer to Diagnostic messages.
2. Verify the correct sensor calibration number is entered in the transmitter.

   The calibration number is listed on the sensor nameplate.
3. Verify the correct sensor line size is entered in the transmitter.

   The line size value is listed on the sensor nameplate.
4. Verify the analog range of the transmitter matches the analog range in the control system.
5. Verify the forced analog output and forced pulse output of the transmitter produces the correct output at the control system.
6. If desired, use a Rosemount 8714D Calibration Standard to verify the transmitter calibration.

## 12.3.2 Sensor

#### Prerequisites

Be sure that power to magnetic flowmeter system is removed before beginning the following sensor checks:

#### Procedure

1. Record the sensor model number and serial number.
2. Visually inspect the sensor for any damage including inside the remote junction box, if applicable.
3. For horizontal flow installations, ensure that the electrodes remain covered by process fluid.

   For vertical or inclined installations, ensure that the process fluid is flowing up into the sensor to keep the electrodes covered by process fluid.
4. Verify the flow arrow is pointing in the same direction as forward flow.

5. Ensure the grounding straps on the sensor are connected to grounding rings, lining protectors, or the adjacent pipe flanges. Improper grounding will cause erratic operation of the system.

   Sensors with a ground electrode will not require the grounding straps to be connected.

## 12.3.3 Remote wiring

**Procedure**

1. The electrode signal and coil drive wires must be separate cables unless Rosemount specified combo cable is used.

   See Sensor to transmitter wiring.

2. The electrode signal wire and coil drive wire must be twisted shielded cable. Rosemount recommends 20 AWG twisted shielded cable for the electrode signal and 14 AWG twisted shielded cable for the coil drive.

   See Sensor to transmitter wiring.

3. See Product certifications regarding wiring installation requirements.
4. See Wiring Diagrams for component wiring.
5. Verify there is minimal exposed wiring and shielding.

   Less than 1 inch (25 mm) is recommended.

6. Verify that the single conduit that houses both the electrode signal and coil drive cables do not contain any other wires, including wires from other magmeters.

**Note**
For installations requiring intrinsically safe electrodes, the signal and coil drive cables must be run in Individual conduits.

## 12.3.4 Process fluid

**Procedure**

1. The process fluid should have a minimum conductivity of 5 microSiemens/cm (5 micro mhos/cm).
2. The process fluid must be free of air and gas.
3. The sensor must be full of process fluid.
4. The process fluid must be compatible with the wetted materials - liner, electrodes, ground rings, and lining protectors.

   Refer to the *Rosemount™ Magnetic Flowmeter Material Selection Guide (00816-0100-3033)* Technical Note for details.

5. If the process is electrolytic or has cathodic protection, refer to the *Installation and Grounding of Magmeters in Typical and Special Applications (00840-2400-4727)* Technical Note for special installation requirements.

# 12.4 Diagnostic messages

Problems in the magnetic flowmeter system are usually indicated by incorrect output readings from the system, error messages, or failed tests. Consider all sources in identifying a problem in the system.

**Table 12-1: Basic Diagnostic Messages**

| Error message | Potential cause | Corrective action |
|---|---|---|
| Empty Pipe | Empty pipe | None - message will clear when pipe is full |
| | Wiring error | Check that wiring matches appropriate wiring diagrams |
| | Electrode error | Perform sensor tests - see Installed sensor tests |
| | Conductivity less than 5 microSiemens per cm | Increase conductivity to greater than or equal to 5 microSiemens per cm |
| | Intermittent diagnostic | Adjust tuning of empty pipe parameters - see Troubleshooting empty pipe |
| Coil Open Circuit | Improper wiring | Check coil drive wiring and sensor coils.<br>Perform sensor tests - see Installed sensor tests |
| | Other manufacturer's sensor | Change coil current to 75 mA - set calibration numbers to 10000550100000030 |
| | | Perform a universal auto-trim to select the proper coil current |
| | Electronics board failure | Replace electronics stack |
| | Coil circuit open fuse | Replace the sensor |
| Auto Zero Failure | Flow is not set to zero | Force flow to zero, perform auto zero trim |
| | Unshielded cable in use | Change wire to shielded cable |
| | Moisture problems | See Installed sensor tests |
| Auto-Trim Failure | No flow in pipe while performing Universal Auto Trim | Establish a known flow rate, and perform universal auto-trim calibration |
| | Wiring error | Check that wiring matches appropriate wiring diagrams - see Implementing a Universal Transmitter |
| | Flow rate is changing in pipe while performing Universal Auto-Trim routine | Establish a constant flow rate, and perform universal auto-trim calibration |
| | Flow rate through sensor is significantly different than value entered during Universal Auto-Trim routine | Verify flow in sensor and perform universal auto-trim calibration |
| | Incorrect calibration number entered into transmitter for Universal Auto-Trim routine | Replace sensor calibration number with 1000005010000000 |
| | Wrong sensor size selected | Correct sensor size setting - see Basic Setup |
| | Sensor failure | Perform sensor tests - see Installed sensor tests |
| Electronics Failure | Electronics self check failure | Cycle power to see if diagnostic message clears |
| | | Replace Electronics stack |

**Table 12-1: Basic Diagnostic Messages *(continued)***

| Error message | Potential cause | Corrective action |
|---|---|---|
| Electronics Temp Fail | Ambient temperature exceeded the electronics temperature limits | Move transmitter to a location with an ambient temperature range of -40 to 140 °F (-40 to 60 °C) |
| Reverse Flow | Electrode or coil wires reverse | Verify wiring between sensor and transmitter |
| | Flow is reverse | Turn ON Reverse Flow Enable to read flow |
| | Sensor installed backwards | Install sensor correctly, or switch either the electrode wires (18 and 19) or the coil wires (1 and 2) |
| PZR Activated (Positive Zero Return) | External voltage applied to terminals 11 and 12 | Remove voltage to turn PZR off |
| Pulse Out of Range | The transmitter is trying to generate a frequency greater than allowed | Standard pulse - increase pulse scaling to prevent pulse output from exceeding 11,000 Hz |
| | | Intrinsically safe pulse - Increase pulse scaling to prevent pulse output from exceeding 5,500 Hz |
| | | Pulse output is in fixed pulse mode and is trying to generate a frequency greater than the pulse width can support - see Pulse output |
| | | Verify the sensor calibration number and line size are correctly entered in the electronics |
| Analog Out of Range | Flow rate is greater than analog output range | Reduce flow, adjust URV and LRV values |
| | | Verify the sensor calibration number and line sizes are correctly entered in the electronics |
| Flow rate > 43 ft/sec | Flow rate is greater than 43 ft/sec | Lower flow velocity, increase pipe diameter |
| | Improper wiring | Check coil drive wiring and sensor coils |
| | | Perform sensor tests - see Installed sensor tests |
| Digital Trim Failure (Cycle power to clear messages, no changes were made) | The calibrator (8714B/C/D) is not connected properly | Review calibrator connections |
| | Incorrect calibration number entered into transmitter | Replace sensor calibration number with 1000015010000000 |
| | Calibrator is not set to 30 FPS | Change calibrator setting to 30 FPS |
| | Bad calibrator or calibrator cable | Replace calibrator and/or calibrator cable |
| Coil Over Current | Improper wiring | Check coil drive wiring and sensor coilsPerform sensor tests - see Installed sensor tests |
| | Transmitter failure | Replace the electronics stack |
| Coil Power Limit | Improper wiring | Check coil drive wiring and sensor coils. |
| | | Perform sensor tests - see Installed sensor tests |
| | Incorrect calibration number | Verify configured calibration number matches sensor tag |
| | Transmitter connected to other manufacturer's sensor | Change coil current to 75 mA - set calibration number to 10000550100000030 |
| | | Perform a universal auto-trim to select the proper coil current |
| | Coil drive frequency set to 37 Hz | Sensor may not be compatible with 37 Hz. Switch coil drive frequency to 5 Hz. |
| | Sensor failure | Perform sensor tests - see Installed sensor tests |

**Table 12-1: Basic Diagnostic Messages *(continued)***

| Error message | Potential cause | Corrective action |
|---|---|---|
| | Improper wiring | Check the analog loop wiring - see Analog output |
| No AO Power | No external loop power | Verify the analog power switch position (internal/ external) |
| | | For externally powered loop, verify power supply requirements - see Powering the transmitter |
| | No loop resistance (open loop) | Install resistance across the analog output terminals |
| | | Disable message using LOI Error Mask parameter |
| | Transmitter failure | Replace the electronics stack |
| Electrode Saturation | Improper wiring | See Wiring |
| | Improper process reference | See Process reference connection |
| | Improper earth grounding | Verify earth ground connections - see Wiring |
| | Application requires special transmitter | Replace transmitter with transmitter that includes special option F0100 |
| LOI Comm Error/LOI Lost Sync | Electrical noise | Verify earth ground connections - see Wiring |
| | Extreme vibration | Relocate transmitter |
| | Transmitter failure | Cycle power. If error returns, replace board stack. |
| LOI Key Stuck | Debris on the LOI glass | Clean LOI glass of any debris |
| | Holding LOI key for more than 60 seconds | Lock LOI to prevent unintentional configuration changes - see Display lock |
| | High levels of electrical noise | Move transmitter away from other electrical equipment or cables |
| | Faulty LOI | Replace LOI |

**Table 12-2: Advanced Process Diagnostic Messages**

| Error message | Potential cause | Corrective action |
|---|---|---|
| Grounding/Wiring Fault | Improper installation of wiring | See Wiring |
| | Coil/electrode shield not connected | See Wiring |
| | Improper process grounding | See Process reference connection |
| | Faulty ground connection | Check wiring for corrosion, moisture in the terminal block -see Process reference connection |
| | Sensor not full | Verify sensor is full |
| | | Enable empty pipe detection |
| High Process Noise | Slurry flows - mining/pulp stock | Decrease the flow rate below 10 ft/s (3 m/s) |
| | | Complete the possible solutions listed under Troubleshooting high process noise |
| | Chemical additives upstream of the sensor | Move injection point downstream of the sensor or move the sensor to a new location |
| | | Complete the possible solutions listed under Troubleshooting high process noise |

**Table 12-2: Advanced Process Diagnostic Messages *(continued)***

| Error message | Potential cause | Corrective action |
|---|---|---|
| | Electrode not compatible with the process fluid | Refer to the *Rosemount™ Magnetic Flowmeter Material Selection Guide (00816-0100-3033)* |
| | Gas/air in line | Move the sensor to another location in the process line to ensure that it is full under all conditions |
| | Electrode coating | Enable coated electrode etection diagnostic |
| | | Use bullet-nose electrodes |
| | | Downsize sensor to increase flowrate above 3 ft/s (1 m/s) |
| | | Periodically clean sensor |
| | Styrofoam or other insulating particles | Complete the possible solutions listed under Troubleshooting high process noise |
| | | Consult factory |
| | Low conductivity fluids (below 10 microsiemens/cm) | Trim electrode and coil wires - see Sensor Installation |
| | | Use integral mount transmitter |
| | | Set coil drive frequency to 37Hz |
| Electrode Coating Level 1 | Coating is starting to buildup on electrode and interfering with measurement signal | Schedule maintenance to clean electrode |
| | | Use bullet nose electrodes |
| | | Downsize sensor to increase flow rate above 3ft/s (1ms) |
| | Process fluid conductivity has changed | Verify process fluid conductivity |
| Electrode Coating Level 2 | Coating has built-up on electrode and is interfering with measurement signal | Schedule maintenance to clean electrode |
| | | Use bullet nose electrodes |
| | | Downsize sensor to increase flow rate above 3ft/s (1ms) |
| | Process fluid conductivity has changed | Verify process fluid conductivity |

**Table 12-3: Advanced Meter Verification Messages**

| Error message | Potential cause | Corrective action |
|---|---|---|
| Meter Ver Failed | Transmitter calibration verification test failed | Verify pass/fail criteria |
| | | Rerun Smart™ Meter Verification under no flow conditions |
| | | Verify calibration using 8714D Calibration Standard |
| | | Perform digital trim |
| | | Replace electronics board |
| | Sensor calibration test failed | Verify pass/fail criteria |
| | | Rerun Smart Meter Verification |
| | | Perform sensor tests - see Installed sensor tests |
| | Sensor coil circuit test failed | Verify pass/fail criteria |
| | | Rerun Smart Meter Verification |

**Table 12-3: Advanced Meter Verification Messages *(continued)***

| Error message | Potential cause | Corrective action |
|---|---|---|
| | | Perform sensor tests - see Installed sensor tests |
| | Sensor electrode circuit test failed | Verify electrode resistance has a baseline (signature) value from a full pipe baseline |
| | | Verify test condition was selected properly |
| | | Verify pass/fail criteria |
| | | Rerun Smart Meter Verification |
| | | Perform sensor tests - see Installed sensor tests |
| 4-20 mA loop verification failed | Analog loop not powered | Check 4-20 mA internal/external loop power switch - see Internal/external analog power (Output option code A) |
| | | Check external supply voltage to the transmitter |
| | | Check for parallel paths in the current loop |
| | Transmitter failure | Perform transmitter self test |
| | | Perform manual analog loop test and D/A trim if necessary |
| | | Replace the electronics board |
| Continuous Meter Verification Error | Transmitter calibration verification test failed | Verify pass/fail criteria |
| | | Run manual Smart Meter Verification under no flow conditions |
| | | Verify calibration using 8714D Calibration Standard |
| | | Perform digital trim |
| | | Replace electronics stack |
| | Sensor calibration test failed | Run manual Smart Meter Verification |
| | | Perform sensor tests - see Installed sensor tests |
| | Sensor coil circuit test failed | Run manual Smart Meter Verification |
| | | Perform sensor tests - see Installed sensor tests |
| | Sensor electrode circuit test failed | Run manual Smart Meter Verification |
| | | Perform sensor tests - see Installed sensor tests |
| | | Verify electrode resistance has a signature value from a full pipe baseline |
| Simulated Velocity Out of Spec | Unstable flow rate during the verification test or noisy process | Run manual transmitter verification test with no flow and a full pipe |
| | Transmitter drift or faulty electronics | Verify transmitter electronics with 8714D Calibration Standard. The dial on the 8714D should be set to 30 ft/s (9.14 m/s). The transmitter should be set up with the nominal calibration number (1000015010000000) and 5 Hz coil drive frequency. |
| | | Perform an electronics trim using the 8714D |
| | | If the electronics trim doesn't correct the issue, replace the electronics |

**Table 12-3: Advanced Meter Verification Messages *(continued)***

| Error message | Potential cause | Corrective action |
|---|---|---|
| Coil Resistance Out of Spec | Moisture in the terminal block of the sensor or shorted coil | Perform sensor tests - see Installed sensor tests |
| | | If the problem persists, replace the sensor |
| Coil Signature Out of Spec | Moisture in the terminal block of the sensor or shorted coil | Perform sensor tests - see Installed sensor tests |
| | | If the problem persists, replace the sensor |
| | Calibration shift caused by heat cycling or vibration | Perform sensor tests - see Installed sensor tests |
| | | If the problem persists, replace the sensor |
| Electrode Resistance Out of Spec | Moisture in the terminal block of the sensor | Perform sensor tests - see Installed sensor tests |
| | | If the problem persists, replace the sensor |
| | Electrode coating | Enable coated electrode detection diagnostic |
| | | Use bullet-nose electrodes |
| | | Downsize sensor to increases flowrate above 3 ft/s (1 m/s) |
| | | Periodically clean sensor |
| | Shorted electrodes | Perform sensor tests - see Installed sensor tests |
| | | If the problem persists, replace the sensor |
| Analog Output Out of Spec | Unstable flow rate during the verification test or noisy process | Run manual transmitter verification test with no flow and a full pipe |
| | Analog output is no longer within accuracy specifications | Check the analog loop wiring. Excessive loop resistance can cause an invalid test |

## 12.4.1 Troubleshooting empty pipe

The following actions can be taken if empty pipe detection is unexpected:

**Procedure**

1. Verify the sensor is full.
2. Verify the sensor has not been installed with a measurement electrode at the top of the pipe.
3. Decrease the sensitivity by setting the empty pipe trigger level to a value of at least 20 counts above the empty pipe value read with a full pipe.
4. Decrease the sensitivity by increasing the empty pipe counts to compensate for process noise. The empty pipe counts is the number of consecutive empty pipe value readings above the empty pipe trigger level required to set the empty pipe diagnostic. The count range is 2-50, factory default set at 5.
5. Increase process fluid conductivity above 5 microsiemens/cm.
6. Properly connect the wiring between the sensor and the transmitter.
7. Perform the sensor electrical resistance tests. For more detailed information, consult Installed sensor tests.

## 12.4.2 Troubleshooting ground/wiring fault

If transmitter detects high levels (greater than 5mV) 50/60 Hz noise caused by improper wiring or poor process grounding:

**Procedure**

1. Verify the transmitter is earth grounded.
2. Connect ground rings, grounding electrode, lining protector, or grounding straps. Grounding diagrams can be found in Process reference connection.
3. Verify the sensor is full.
4. Verify wiring between sensor and transmitter is prepared properly. Shielding should be stripped back less than 1 inch (25 mm).
5. Use separate shielded twisted pairs for wiring between sensor and transmitter.
6. Properly connect the wiring between the sensor and the transmitter. Corresponding terminal block numbers in the sensor and transmitter must be connected.

## 12.4.3 Troubleshooting high process noise

**Note**
In applications where very high levels of noise are a concern, it is recommended that a dual-calibrated Rosemount High-Signal 8707 sensor be used. These sensors can be calibrated to run at lower coil drive current supplied by the standard Rosemount transmitters, but can also be upgraded by changing to the 8712H High-Signal transmitter.

**Note**
For more information about process noise, see Process noise profiles.

**1/f noise**

This type of noise can be mitigated by switching to the 37 Hz coil drive setting.

**Spike noise**

The type of noise can be mitigated by switching to the 37 Hz coil drive setting.

**White noise**

This type of noise can be mitigated by switching to the 37 Hz coil drive setting.

### Noise ratio less than 25 in 5 Hz coil drive frequency mode

The transmitter detected high levels of process noise. If the signal to noise ratio is less than 25 in 5 Hz coil drive frequency mode, proceed with the following steps:

**Procedure**

1. Increase transmitter coil drive frequency mode to 37 Hz (refer to Coil drive frequency and, if possible, perform auto zero function. See Auto zero).
2. Verify sensor is electrically connected to the process with process reference electrode, grounding rings with grounding straps, or lining protector with grounding straps.
3. If possible, redirect chemical additions downstream of the magmeter.
4. Verify process fluid conductivity is above 5 microSiemens/cm.

### Noise ratio less than less than 25 in 37 Hz coil drive frequency mode

If the signal to noise ratio is less than 25 in 37 Hz coil drive frequency mode, see Digital Signal Processing.

## 12.4.4 Troubleshooting coated electrode detection

In the event that electrode coating is detected, use the following table to determine the appropriate course of action.

**Table 12-4: Troubleshooting the Electrode Coating Diagnostic**

| Error message | Potential causes of error | Steps to correct |
|---|---|---|
| Electrode Coating Level 1 | • Insulating coating is starting to build up on the electrode and may interfere with the flow measurement signal<br>• Process fluid conductivity has decreased to a level close to operational limits of the meter | • Verify process fluid conductivity<br>• Schedule maintenance to clean the electrodes<br>• Use bullet nose electrodes<br>• Replace the meter with a smaller diameter meter to increase the flow velocity to above 3 ft/s (1 m/s) |
| Electrode Coating Level 2 | • Insulating coating has built up on the electrodes and is interfering with the flow measurement signal<br>• Process fluid conductivity has decreased to a level below the operational limits of the meter | • Verify process fluid conductivity<br>• Schedule maintenance to clean the electrodes<br>• Use bullet nose electrodes<br>• Replace the meter with a smaller diameter meter to increase the flow velocity to above 3 ft/s (1 m/s) |

## 12.4.5 Troubleshooting 4-20 mA loop verification

In the event that the 4-20 mA Loop Verification fails, use the following table to determine the appropriate course of action.

**Table 12-5: Troubleshooting the Analog Loop Verification Diagnostic**

| Test | Potential cause | Corrective action |
|---|---|---|
| 4-20 mA Loop Verification Failure | Analog loop not powered | Check analog loop wiring |
| | | Check loop resistance |
| | | Check analog loop power switch – see Internal/external analog power (Output option code A) |
| | | Check external supply voltage to the transmitter |
| | | Check for parallel paths in the current loop |
| | Analog drift | Perform D/A trim |
| | Transmitter failure | Perform transmitter self-test |
| | | Perform manual analog loop test |
| | | Contact an Emerson Flow representative |

## 12.4.6 Troubleshooting the Smart Meter Verification test

If the Smart Meter Verification test fails, use the following table to determine the appropriate course of action. Begin by reviewing the Smart Meter Verification results to determine the specific test that failed.

**Table 12-6: Troubleshooting the Smart Meter Verification diagnostic**

| Test | Potential cause | Corrective action |
|---|---|---|
| Transmitter Verification Test | • Unstable flow reading during the test<br>• Noise in the process<br>• Transmitter drift<br>• Faulty electronics | • Rerun Smart Meter Verification under No Flow conditions<br>• Check the transmitter calibration with the 8714D Calibration Standard<br>• Perform a digital trim<br>• Contact an Emerson Flow representative |
| Sensor Calibration Verification | • Moisture in the sensor terminal block<br>• Calibration shift caused by heat cycling or vibration | • Rerun Smart Meter Verification<br>• Perform the sensor checks detailed in Sensor troubleshooting<br>• Remove the sensor and send back for evaluation and / or recalibration<br>• Retake sensor baseline at operating temperature |
| Coil Circuit Health | • Moisture in the sensor terminal block<br>• Shorted Coil<br>• High temperature application<br>• Long remote cable length | |
| Electrode Circuit Health | • Electrode resistance baseline was not taken after installation<br>• Test condition was not selected properly<br>• Moisture in the sensor terminal block<br>• Coated electrodes<br>• Shorted electrodes | |

## 12.5 Basic troubleshooting

When troubleshooting a magnetic flow meter, it is important to identify the issue. Table 12-7 provides common symptoms displayed by a magnetic flow meter that is not functioning properly. This table provides potential causes and suggested corrective actions for each symptom.

### Table 12-7: Common magnetic flow meter Issues

| Symptom | Potential cause | Corrective action |
|---|---|---|
| Output at 0 mA | No power to transmitter | Check power source and connections to the transmitter |
| | Analog output improperly configured | Check the analog power switch position |
| | | Verify wiring and analog power |
| | Electronics failure | Verify transmitter operation with an 8714D Calibration Standard; If it fails, replace the electronics stack |
| | Blown fuse | Check the fuse and replace with an appropriately rated fuse, if necessary |
| Output at 4 mA | Transmitter in multidrop mode | Configure Poll Address to 0 to take transmitter out of multidrop mode |
| | Low Flow Cutoff set too high | Configure Low Flow Cutoff to a lower setting or increase flow to a value above the low flow cutoff |
| | PZR Activated | Open PZR switch at terminals 11 and 12 to deactivate the PZR |
| | Flow is in reverse direction | Enable Reverse Flow function |
| | Shorted coil | Coil check – perform sensor test |
| | Empty pipe | Fill pipe |
| | Electronics failure | Verify transmitter operation with an 8714D Calibration Standard; If it fails, replace the electronics stack |
| | Fixed Current Mode is turned ON | Turn Fixed Current Mode OFF |
| Output will not reach 20 mA | Loop resistance is greater than 600 ohms | Reduce loop resistance to less than 600 ohms |
| | | Perform analog loop test |
| | Insufficient supply voltage to analog output | Verify analog output supply voltage |
| | | Perform analog loop test |
| Output at 20.8 mA | Transmitter not ranged properly | Reset the transmitter range values – see Basic Setup |
| | | Check tube size setting in transmitter and make sure it matches the actual tube size – see Basic Setup |
| Output at alarm level | Electronics failure | Cycle power; If alarm is still present, verify transmitter operation with an 8714D Calibration Standard; If it fails, replace the electronics stack |
| | Open coil circuit | Check coil drive circuit connections at the sensor and at the transmitter |
| | Analog output diagnostic alarm is active | See AO diagnostic alarm |
| | Coil power or coil current is over limit | Check coil drive circuit connections at the sensor and at the transmitter |
| | | Cycle power; If alarm is still present, verify transmitter operation with an 8714D Calibration Standard; If it fails, replace the electronics stack |
| Output at alarm level while connected to non-Rosemount sensor | Connected to incompatible sensor | See Implementing a Universal Transmitter |

**Table 12-7: Common magnetic flow meter Issues *(continued)***

| Symptom | Potential cause | Corrective action |
|---|---|---|
| Pulse output at zero, regardless of flow | Wiring error | Check pulse output wiring at terminals 5 and 6; Refer to wiring diagram for pulse counter and pulse output; See Connect pulse output |
| | PZR activated | Remove signal at terminals 11 and 12 to deactivate the PZR |
| | No power to transmitter | Check pulse output wiring at terminals 5 and 6; Refer to wiring diagram for pulse counter and pulse output |
| | | Power the transmitter |
| | Reverse flow | Enable Reverse Flow function |
| | Electronics failure | Verify transmitter operation with an 8714D Calibration Standard; If it fails, replace the electronics stack |
| | Pulse output incorrectly configured | Review configuration and correct as necessary |
| Communication problems with the Handheld Communicator | 4–20 mA output configuration | Check analog power switch (internal/external); The Handheld Communicator requires a 4–20 mA output to function |
| | Communication interface wiring problems | Incorrect load resistance (250 Ohm minimum, 600 Ohm maximum)Check appropriate wiring diagram |
| | Low batteries in the Handheld Communicator | Replace the batteries in the Handheld Communicator – see the communicator manual for instructions |
| | Old revision of software in the Handheld Communicator | Consult your local sales office about updating to the latest revision of software |
| Error Messages on LOI or Handheld Communicator | Many possible causes depending upon the message | See Diagnostic messages |
| Discrete input does not register | Input signal does not provide enough counts | Verify that the discrete input provided meets the requirements in Connect discrete input |
| | | Perform a loop test to validate the analog control loop |
| | | Perform a D/A trim; This allows the calibration of the analog output with an external reference at operating endpoints of the analog output |

**Table 12-7: Common magnetic flow meter Issues *(continued)***

| Symptom | Potential cause | Corrective action |
|---|---|---|
| Reading does not appear to be within rated accuracy | Transmitter, control system, or other receiving device not configured properly | Check all configuration variables for the transmitter, sensor, communicator, and/or control system |
| | | Check these other transmitter settings:<br>• Sensor calibration number<br>• Units<br>• Line size |
| | | Perform a loop test to check the integrity of the circuit |
| | Electrode Coating | Enable Coated Electrode Detection diagnostic |
| | | Use bullet-nose electrodes |
| | | Downsize sensor to increase flow rate above 3 ft/s |
| | | Periodically clean sensor |
| | Gas/air in line | Move the sensor to another location in the process line to ensure it is full under all conditions |
| | Moisture problem | Perform the sensor tests - see Installed sensor tests |
| | Insufficient upstream/downstream pipe diameter | Move sensor to a new location with 5 pipe diameters upstream and 2 pipe diameters downstream if possible |
| | Cables for multiple magmeters run through same conduit | Use dedicated conduit run for each sensor and transmitter |
| | Improper wiring | If electrode shield and electrode signal wires are switched, flow indication will be about half of what is expected; Check wiring diagrams |
| | Flow rate is below 1 ft/s (specification issue) | See accuracy specification for specific transmitter and sensor |
| | Auto zero was not performed when the coil drive frequency was changed from 5 Hz to 37 Hz | Verify the sensor is full, verify there is no flow, and perform the auto zero function |
| | Sensor failure–shorted electrode | Perform the sensor tests - see Installed sensor tests |
| | Sensor failure–shorted or open coil | Perform the sensor tests - see Installed sensor tests |
| | Transmitter failure | Verify transmitter operation with an 8714D Calibration Standard; If it fails, replace the electronics stack |

**Table 12-7: Common magnetic flow meter Issues *(continued)***

| Symptom | Potential cause | Corrective action |
|---|---|---|
| Noisy Process | Chemical additives upstream of magnetic flowmeter | See Troubleshooting high process noise |
| | | Move injection point downstream of magnetic flowmeter, or move magnetic flowmeter |
| | | Set Coil Drive Frequency to High |
| | Sludge flows–mining/coal/sand/slurries (other slurries with hard particles) | Decrease flow rate below 10 ft/s |
| | | Set Coil Drive Frequency to High |
| | Styrofoam or other insulating particles in process | See Troubleshooting high process noise |
| | | Consult factory |
| | | Set Coil Drive Frequency to High |
| | Electrode coating | Enable Coated Electrode Detection diagnostic |
| | | Use a smaller sensor to increase flow rate above 3 ft/s |
| | | Periodically clean sensor |
| | Gas/air in line | Move the sensor to another location in the process line to ensure it is full under all conditions |
| | Low conductivity fluids (below 5 microsiemens/cm) | Trim electrode and coil wires – see Sensor to transmitter wiring |
| | | Keep flow rate below 3 FPS |
| | | Use component cable - see Sensor to transmitter wiring |
| Noisy Process (cont.) | Low conductivity fluids (below 5 microsiemens/cm), (cont.) | Integral mount transmitter |
| Meter output is unstable | Low conductivity fluids (below 5 microsiemens/cm) combined with cable vibration or 60 Hz interference | Eliminate cable vibration |
| | | Move cable to lower vibration run |
| | | Tie down cable mechanically |
| | | Trim electrode and coil wires - see Sensor to transmitter wiring |
| | | Route cable line away from other equipment powered by 60 Hz |
| | | Use component cable - see Sensor to transmitter wiring |
| | Electrode incompatibility | Check the Technical Data Sheet, Magnetic Flowmeter Material Selection Guide (document number 00816-0100-3033), for chemical compatibility with electrode material |
| | Improper grounding | Check ground wiring – see Process reference connection for wiring and grounding procedures |
| | High local magnetic or electric fields | Move magnetic flowmeter (20–25 ft away is usually acceptable) |
| | Control loop improperly tuned | Check control loop tuning |
| | Sticky valve (look for periodic oscillation of meter output) | Service valve |

**Table 12-7: Common magnetic flow meter Issues *(continued)***

| Symptom | Potential cause | Corrective action |
|---|---|---|
| | Sensor failure | Perform the sensor tests (See Installed sensor tests) |
| | Analog output loop problem | Check that the 4–20 mA loop matches the digital value Perform analog output test |
| Meter output is unstable (cont.) | Low conductivity fluids (below 5 microsiemens/cm) combined with cable vibration or 60 Hz interference (cont.) | Use an integral mount |

# 12.6 Sensor troubleshooting

This section describes manual tests that can be performed on the sensor to verify the health of individual components. The tests will require the use of a digital multimeter capable of measuring conductance in nanoSiemens and an LCR meter. A sensor circuit diagram is shown in Figure 12-1. The tests described below will check for continuity or isolation of the internal components of the sensor.

**Figure 12-1: Sensor Circuit Diagram (Simplified)**

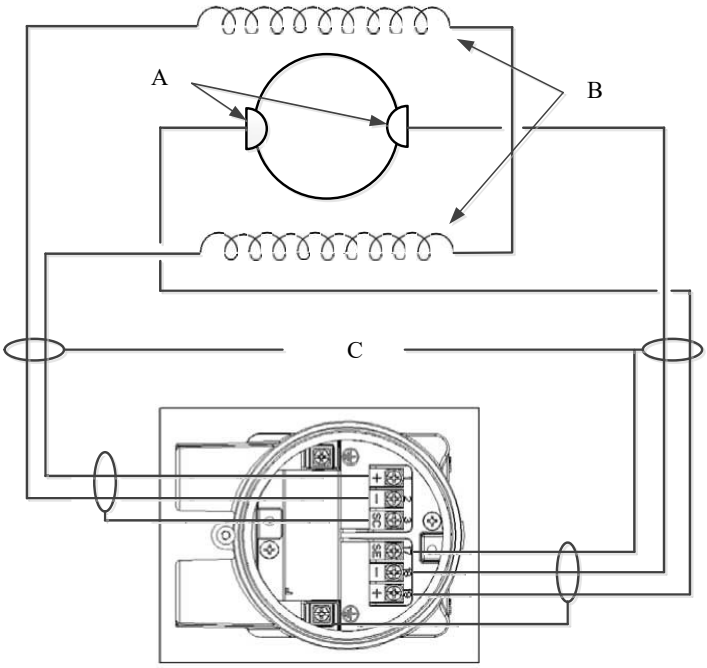


*A. Electrodes*
*B. Coils*
*C. Sensor housing*

## 12.6.1 Sensor adapter feed through pins

The sensor adapter is the part of the sensor that provides the internal connection feed-through wiring from the internal sensor components to the socket module connections. The top of the adapter has 10 pins - four pins for the coils, four pins for the electrodes,

and two pins for the process reference. Each connection point has two pins associated for redundant continuity. See Figure 12-2.

The best location for testing the sensor components is taking measurements directly on the feed-through pins. Direct measurement on the pins eliminates the possibility of an erroneous measurement caused by a bad socket module or remote wiring. The figure below shows the feed-through pin connections as they relate to the terminal connections described in the tests.

**Figure 12-2: Sensor Adapter Feed-through Pins**

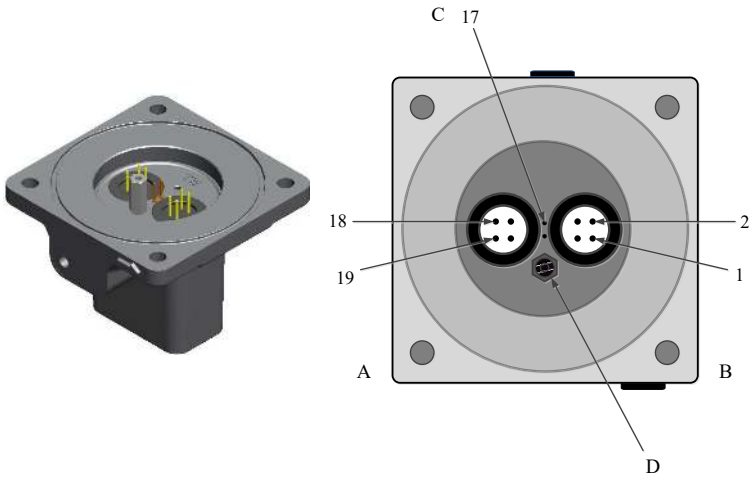


*A. Electrode side*
*B. Coil side*
*C. Process reference*
*D. Orientation key*

## 12.6.2 Sensor adapter direct lead pins

The sensor adapter direct leads are the part of the sensor that provides the direct connection from the internal sensor components to the terminal block connections. The top of the adapter has 6 pins - three pins for the coils, and three pins for the electrodes. See Figure 12-3. The best location for testing the sensor components is taking measurements directly on the slot pins. Direct measurement on the pins eliminates the possibility of an erroneous measurement caused by a bad terminal block or remote wiring. Figure 12-3 shows the slot pin connections as they relate to the terminal connections described in the tests.

**Figure 12-3: Sensor adapter direct lead pins**

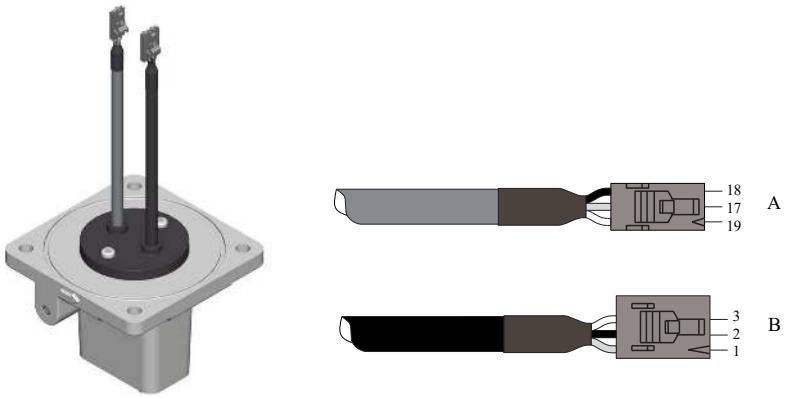


*A. Electrode side*
*B. Coil side*

### 12.6.3 Socket module

The socket module connects the sensor adapter to the transmitter. See Figure 12-4. The socket module is a replaceable component. If test measurements taken through the socket module show a failure, remove the socket module and confirm measurements directly on the feed-through pins of the sensor adapter. To remove the socket module, refer to Maintenance.

**Figure 12-4: Remote Mount Socket Module**



## 12.7 Installed sensor tests

If a problem with an installed sensor is identified, refer to Table 12-8 through Table 12-12 to assist in troubleshooting the sensor. Disconnect or turn off power to the transmitter

before performing any of the sensor tests. Always check the operation of test equipment before each test.

If possible, take all readings from the preferred locations identified in Sensor adapter feed through pins, Sensor adapter direct lead pins, and Socket module. If the recommended locations in the sensor adapter are inaccessible, take measurements at the sensor terminal block or through remote cabling as close to the sensor as possible. Readings taken through remote cabling that is more than 100 feet (30 meters) in length may provide incorrect or inconclusive information and should be avoided.

The expected values in the test below assume the measurements have been taken directly at the pins.

**Table 12-8: Test A. Sensor coil**

| Test conditions | Expected value | Potential cause | Corrective action |
|---|---|---|---|
| • Location: installed or uninstalled<br>• Required equipment: multimeter<br>• Measuring at connections: 1 and 2 = R | 2Ω≤R≤18Ω | • Open or shorted coil | • Remove and replace sensor |

**Table 12-9: Test B: Shields to case**

| Test conditions | Expected value | Potential cause | Corrective action |
|---|---|---|---|
| • Location: installed or uninstalled<br>• Required equipment: multimeter<br>• Measuring at connections:<br>— 17 and 3<br>— 3 and case ground<br>— 17 and case ground | < 0.3Ω | • Moisture in terminal block<br>• Leaky electrode<br>• Process behind liner | • Clean terminal block<br>• Remove sensor |

**Table 12-10: Test C. Coil to coil shield**

| Test conditions | Expected value | Potential cause | Corrective action |
|---|---|---|---|
| • Location: installed or uninstalled<br>• Required equipment: multimeter<br>• Measuring at connections:<br>— 1 and 3<br>— 2 and 3 | ∞Ω (< 1nS) | • Process behind liner<br>• Leaky electrode<br>• Moisture in terminal block | • Remove sensor and dry<br>• Clean terminal block<br>• Confirm with sensor coil test |

**Table 12-11: Test D. Electrode to electrode shield**

| Test conditions | Expected value | Potential cause | Corrective action |
|---|---|---|---|
| • Location: installed<br>• Required equipment: LCR (Set to Resistance and 120 Hz)<br>• Measuring at connections:<br>— 18 and 17 = $R_1$<br>— 19 and 17 = $R_2$ | • $R_1$ and $R_2$ should be stable<br>• $\lvert R_1 - R_2 \rvert \leq 300\Omega$ | • Unstable $R_1$ or $R_2$ values confirm coated electrode<br>• Shorted electrode<br>• Electrode not in contact with process<br>• Empty pipe<br>• Low conductivity<br>• Leaky electrode<br>• Process reference ground not connected properly | • Remove coating from sensor wall<br>• Use bullet-nose electrodes<br>• Repeat measurement<br>• Remove sensor and complete tests in Uninstalled sensor tests<br>• Connect process reference ground per Process reference connection |

**Table 12-12: Test E. Electrode to Electrode**

| Test conditions | Expected value | Potential cause | Corrective action |
|---|---|---|---|
| • Location: installed<br>• Required equipment: LCR (Set to Resistance and 120 Hz)<br>• Measuring at connections: 18 and 19<br>— 18 and 17 = $R_1$<br>— 19 and 17 = $R_2$ | Should be stable and same relative magnitude of $R_1$ and $R_2$ from Test D | • Unstable $R_1$ or $R_2$ values confirm coated electrode<br>• Shorted electrode<br>• Electrode not in contact with process<br>• Empty pipe<br>• Low conductivity<br>• Leaky electrode<br>• Process reference ground not connected properly | • Remove coating from sensor wall<br>• Use bullet-nose electrodes<br>• Repeat measurement<br>• Remove sensor and complete tests in Uninstalled sensor tests<br>• Connect process reference ground per Process reference connection |

To test the sensor, a multimeter capable of measuring conductance in nanoSiemens is preferred. Conductance is the reciprocal of resistance.

Or:

$$1\ nanosiemens = \frac{1}{1\ gigaohm}$$

$$1\ nanosiemens = \frac{1}{1\ x\ 10^9\ ohm}$$

# 12.8 Uninstalled sensor tests

Sensor troubleshooting can also be performed on an uninstalled sensor. If test results from installed sensor tests are inconclusive, the next step is remove the sensor and perform the tests outlined in this section. Take measurements from the recommended terminal location, and directly on the electrode head inside the sensor. The measurement electrodes, 18 and 19, are on opposite sides in the inside diameter of the sensor.
If applicable, the third process reference electrode is between the two measurement electrodes.

The expected values in the test below assume the measurements have been taken directly at the pins.

### Table 12-13: Test A. Terminal to front electrode

| Test conditions | Expected value | Potential cause | Corrective action |
|---|---|---|---|
| • Location: uninstalled<br>• Required equipment: Multimeter<br>• 18 and electrode 18(1) | ≤ 1 Ω | • Shorted electrode<br>• Open electrode<br>• Coated electrode | • Replace sensor<br>• Remove coating from sensor wall |

*(1) When the connection head is in the vertical upright position and the flow arrow (see Flow direction) on the connection head flange points to the right, the front of the meter will be facing towards you. Electrode 18 is on the front of the meter. If you cannot determine the front of the meter, measure both electrodes. One electrode should result in an open reading, while the other electrode should be less than 0.3 ohm.*

### Table 12-14: Test B. Terminal to back electrode

| Test conditions | Expected value | Potential cause | Corrective action |
|---|---|---|---|
| • Location: uninstalled<br>• Required equipment: Multimeter<br>• 19 and electrode 19(1) | ≤ 1 Ω | • Shorted electrode<br>• Open electrode<br>• Coated electrode | • Replace sensor<br>• Remove coating from sensor wall |

*(1) When the connection head is in the vertical upright position and the flow arrow (see Flow direction) on the connection head flange points to the right, the front of the meter will be facing towards you. Electrode 18 is on the front of the meter. If you cannot determine the front of the meter, measure both electrodes. One electrode should result in an open reading, while the other electrode should be less than 0.3 ohm.*

### Table 12-15: Test C. Terminal to reference electrode

| Test conditions | Expected value | Potential cause | Corrective action |
|---|---|---|---|
| • Location: uninstalled<br>• Required equipment: Multimeter<br>• 17 and process reference electrode(1) | ≤ 0.3 Ω | • Shorted electrode<br>• Open electrode<br>• Coated electrode | • Replace sensor<br>• Remove coating from sensor wall |

*(1) Only valid if the sensor has a process reference electrode.*

### Table 12-16: Test D. Terminal to case ground

| Test conditions | Expected value | Potential cause | Corrective action |
|---|---|---|---|
| • Location: uninstalled<br>• Required equipment: Multimeter<br>• 17 and safety ground | ≤ 0.3 Ω | • Moisture in terminal block<br>• Leaky electrode<br>• Process behind liner | • Clean terminal block<br>• Replace terminal block<br>• Replace sensor |

**Table 12-17: Test E. Electrode to electrode shield**

| Test conditions | Expected value | Potential cause | Corrective action |
|---|---|---|---|
| • Location: uninstalled<br>• Required equipment: Multimeter<br>• 18 and 17<br>• 19 and 17 | ∞Ω (< 1 nS) | • Shorted electrode<br>• Leaky electrode<br>• Moisture in terminal block | • Replace sensor<br>• Clean terminal block<br>• Replace terminal block |

**Table 12-18: Test F. Electrode shield to coil**

| Test conditions | Expected value | Potential cause | Corrective action |
|---|---|---|---|
| • Location: uninstalled<br>• Required equipment: Multimeter<br>• 17 and 1 | ∞Ω (< 1 nS) | • Process in coil housing<br>• Moisture in terminal block | • Replace sensor<br>• Clean terminal block<br>• Replace terminal block |

## 12.9 Technical support and service

Email addresses:

Worldwide: flow.support@emerson.com

Asia-Pacific: APflow.support@emerson.com

Middle East and Africa: FlowTechnicalSupport@emerson.com

## 12.10 Service

To expedite the return process outside the United States, contact an Emerson representative.

# A Product specifications

## A.1 Rosemount 8700M Flowmeter Platform specifications

The tables below outline some of the basic performance, physical, and functional specifications of the Rosemount 8700M Magnetic Flowmeter Platform.

**Table A-1: Rosemount 8712EM Transmitter Specifications**

| | | |
|---|---|---|
|  | Model | 8712EM |
| | Base accuracy(1) | 0.25% Standard 0.15% High Accuracy Option |
| | Mounting | Remote |
| | Power supply | Global AC or DC |
| | User interface | LCD display with 15 button tactile keypad<br>No display |
| | Communication protocol | HART |
| | Diagnostics | Basic, DA1, DA2 |
| | Sensor compatibility | All Rosemount plus other manufacturers |
| | Detailed specifications | Transmitter specifications |
| | Ordering information | Product Data Sheet |

*(1) For complete accuracy specifications, please refer to Transmitter functional specifications.*

**Table A-2: Rosemount Sensor Specifications**

| **8705 Sensor** | | |
|---|---|---|
|  | Style | Flanged |
| | Base accuracy(1) | 0.25% Standard 0.15% High Accuracy Option |
| | Line sizes | ½-in. to 36-in. (15 mm to 900 mm) |
| | Design features | Standard Process Design |
| | Detailed specifications | 8705-M Flanged Sensor Specifications |
| | Ordering information | Product Data Sheet |

### Table A-2: Rosemount Sensor Specifications *(continued)*

| | | |
|---|---|---|
| **8711 Sensor** | | |
|  | Style | Wafer |
| | Base accuracy(1) | 0.25% Standard 0.15% High Accuracy Option |
| | Line sizes | 1½ -in. to 8-in. (40 mm to 200 mm) |
| | Design features | Compact, Light Weight |
| | Detailed specifications | 8711-M/L Wafer Sensor Specifications |
| | Ordering information | Product Data Sheet |
| **8721 Sensor** | | |
|  | Style | Hygienic (sanitary) |
| | Base accuracy(1) | 0.5% Standard 0.25% High Accuracy Option |
| | Line sizes | ½-in. to 4-in. (15 mm to 100 mm) |
| | Design features | 3-A CIP/SIP |
| | Detailed specifications | 8721 Hygienic (Sanitary) Sensor Specifications |
| | Ordering information | Product Data Sheet |

*(1) For complete accuracy specifications, refer to the sensor's detailed specifications.*

### Table A-3: Lining Material Selection

| Liner material | General characteristics |
|---|---|
| PFA, PFA+  | Best chemical resistance |
| | Better abrasion resistance than PTFE |
| | Best high temperature capabilities |
| | Process temperature: -58 to 350 °F (-50 to 177 °C) |
| PTFE  | Highly chemical resistant |
| | Excellent high temperature capabilities |
| | Process temperature: -58 to 350 °F (-50 to 177 °C) |
| ETFE  | Excellent chemical resistance |
| | Better abrasion resistance than PTFE |
| | Process temperature: -58 to 300 °F (-50 to 149 °C) |

### Table A-3: Lining Material Selection *(continued)*

| Liner material | General characteristics |
|---|---|
| Polyurethane 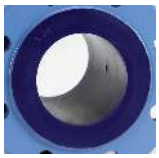 | Limited chemical resistance |
| | Excellent abrasion resistance for slurries with small and medium particles |
| | Process temperature: 0 to 140 °F (-18 to 60 °C) |
| | Typically applied in clean water |
| Neoprene  | Very good abrasion resistance for small and medium particles |
| | Better chemical resistance than polyurethane |
| | Typically applied in water with chemicals, and sea water |
| | Preferred liner for high pressure > ASME B16.5 Class 900 |
| | Process temperature: 0 to 176 °F (-18 to 80 °C) |
| Linatex Rubber  | Limited chemical resistance especially in acids |
| | Very good abrasion resistance for large particles |
| | Softer material than polyurethane and neoprene |
| | Typically applied in mining slurries |
| | Process temperature: 0 to 158 °F (-18 to 70 °C) |
| Adiprene 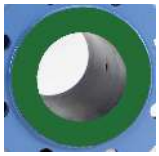 | Ideal for applications with high salinity and/or hydrocarbon carryover |
| | Excellent abrasion resistance |
| | Typically used for Water Injection, Recovered Water, and Coal Gasification Slurries |
| | Preferred liner for high pressure > ASME B16.5 Class 900 |
| | Process temperature: 0 to 200 °F (-18 to 93 °C) |

### Table A-4: Electrode Material

| Electrode material | General characteristics |
|---|---|
| 316L Stainless Steel | Good corrosion resistance |
| | Good abrasion resistance |
| | Not recommended for sulfuric or hydrochloric acids |
| Nickel Alloy 276 (UNS N10276) | Better corrosion resistance |
| | High strength |
| | Good in slurry applications |
| | Effective in oxidizing fluids |
| Tantalum | Excellent corrosion resistance |
| | Not recommended for hydrofluoric acid, fluorosilic acid, or sodium hydroxide |
| 80% Platinum 20% Iridium | Best chemical resistance |
| | Expensive material |
| | Not recommended for aquaregia |

### Table A-4: Electrode Material *(continued)*

| Electrode material | General characteristics |
|---|---|
| Titanium | Better chemical resistance |
| | Better abrasion resistance |
| | Good for sea water applications |
| | Not recommended for hydrofluoric or sulfuric acid |
| Tungsten Carbide coated | Limited chemical resistance |
| | Best abrasion resistance |
| | High concentration slurries |
| | Preferred electrode for oil and gas fracturing applications |

### Table A-5: Electrode Type

| Electrode type | General characteristics |
|---|---|
| Standard Measurement | Lowest cost |
| | Good for most applications |
| Measurement + Reference Electrode (Also see Table A-6 and Table A-7 for grounding options and installation | Low cost grounding option especially for large line sizes |
| | If using a reference electrode, process fluid must have a minimum conductivity of 100 microSiemens/cm |
| | Not recommended for electrolytic or galvanic corrosion applications |
| Bulletnose | Extended head protrudes into the flow stream for self-cleaning |
| | Best option for coating processes |
| Flat Head | Low profile head |
| | Best option for abrasive slurries |

### Table A-6: Process Reference Options

| Grounding options | General characteristics |
|---|---|
| No Grounding Options (grounding straps) | Acceptable for conductive unlined pipe |
| | Grounding straps provided at no cost |
| Reference Electrode | Same material as measurement electrodes |
| | Sufficient grounding option when process fluid conductivity is greater than 100 microSiemens/cm |
| | Not recommended in electrolysis applications, galvanic corrosion applications, applications where the electrodes may coat, or non-conductive pipe. |

**Table A-6: Process Reference Options *(continued)***

| Grounding options | General characteristics |
|---|---|
| Grounding Rings | Low conductivity process fluids |
| | Cathodic or electrolysis applications that may have stray currents in or around the process |
| | Variety of materials for process fluid compatibility |
| Lining Protectors | Protect upstream edge of sensor from abrasive fluids |
| | Permanently installed on sensor |
| | Protect liner material from over torquing of flange bolts |
| | Provide ground path and eliminate need for grounding rings or reference electrode |
| | Required for applications where Flexitallic gaskets are used |

**Table A-7: Process Reference Installation**

| Type of pipe | Grounding straps | Grounding rings | Reference electrode | Lining protectors |
|---|---|---|---|---|
| Conductive unlined pipe | Acceptable | Not required | Not required | Not required |
| Conductive lined pipe | Not acceptable | Acceptable | Acceptable | Acceptable |
| Non-conductive pipe | Not acceptable | Acceptable | Not recommended | Acceptable |

# A.2 Transmitter specifications

## A.2.1 Transmitter functional specifications

### Sensor compatibility

Compatible with Rosemount 8705, 8711, and 8721 sensors. Compatible with AC and DC powered sensors of other manufacturers.

### Transmitter coil drive current

500 mA

### Flow rate range

Capable of processing signals from fluids with velocities between 0.04 and 39 ft/s (0.01 to 12 m/s) for both forward and reverse flow in all sensor sizes. Full scale continuously adjustable between –39 and 39 ft/s (–12 to 12 m/s).

### Conductivity limits

Process liquid must have a conductivity of 5 microSiemens/cm (5 micromhos/cm) or greater.

### Power supply

- 90 - 250 VAC @ 50/60 Hz

- 12 - 42 VDC
- 12 - 30 VDC

### Line power fuses

- 90 - 250 VAC systems:
  - 2 amp quick acting
  - Bussman AGC2 or equivalent
- 12 - 42 VDC systems
  - 3 amp quick acting
  - Bussman AGC3 or equivalent
- 12 - 30 VDC systems
  - 3 amp quick acting
  - Bussman AGC3 or equivalent

### Power consumption

- 90 - 250 VAC: 40 VA maximum
- 12 - 42 VDC: 15 W maximum
- 12 - 30 VDC: 3 W maximum

### Switch-on current

- At 250 VAC: Maximum 35.7 A (< 5 ms)
- At 42 VDC: Maximum 42 A (< 5 ms)
- At 30 VDC: Maximum 42 A (< 5 ms)

### AC power supply requirements

Units powered by 90 - 250 VAC have the following power requirements. Peak inrush is 35.7 A at 250 VAC supply, lasting approximately 1 ms. Inrush for other supply voltages can be estimated with: Inrush (Amps) = Supply (Volts) / 7.0

**Figure A-1: AC current requirements**

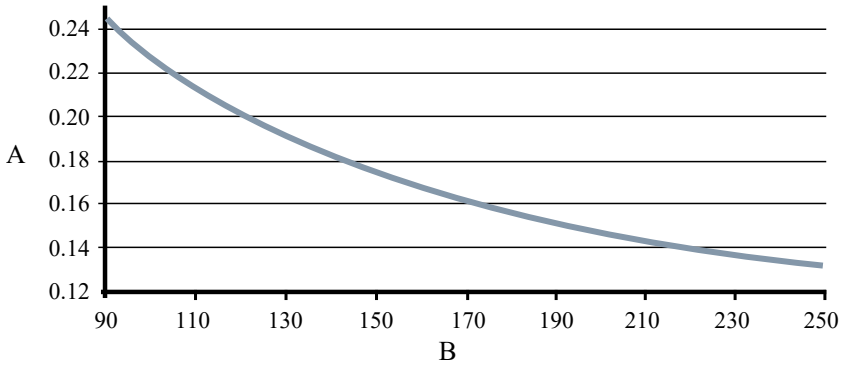


*A. Supply current (amps)*
*B. Power supply (VAC)*

**Figure A-2: Apparent power**

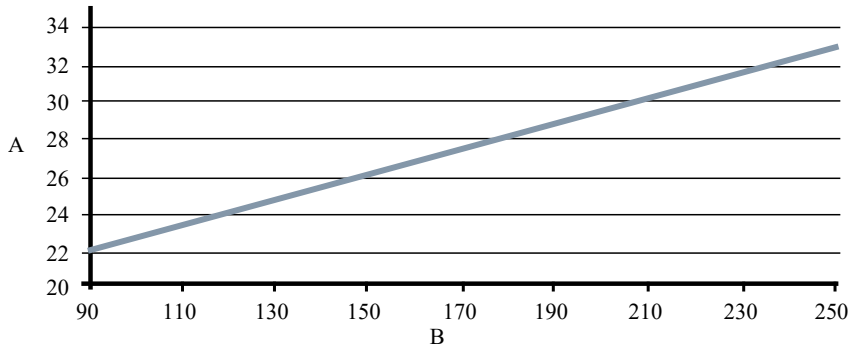


*A. Apparent power (VA)*
*B. Power supply (VAC)*

## DC power supply requirements

Standard DC Units powered by 12 VDC power supply may draw up to 1.2 A of current steady state. Low power DC units may draw up to 0.25 A of current steady state. Peak inrush is 42 A at 42 VDC supply, lasting approximately 1 ms. Inrush for other supply voltages can be estimated with: Inrush (Amps) = Supply (Volts) / 1.0

**Figure A-3: DC current requirements**

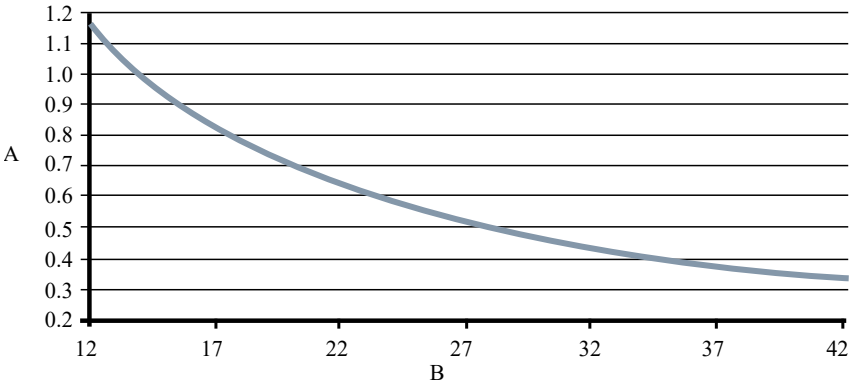


*A. Supply current (amps)*
*B. Power supply (VDC)*

### DC low power supply requirements

**Figure A-4: Low power DC current requirements**

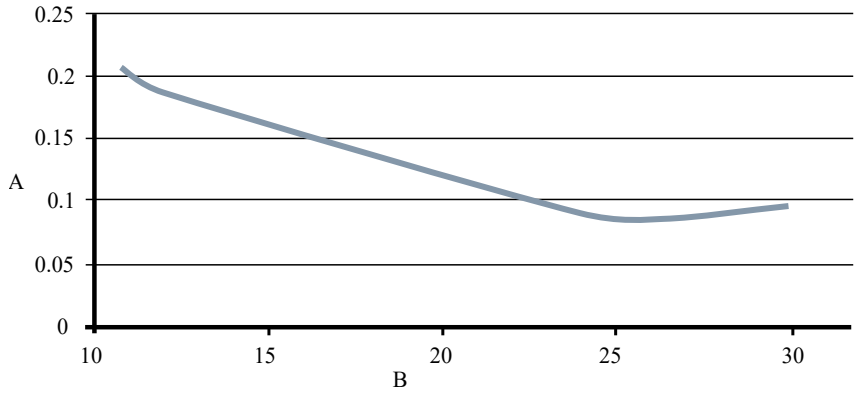


*A. Supply current (amps)*
*B. Power supply (VDC)*

### Low power software option

This software option lowers the coil current from 500 mA to 75 mA in order to conserve power for applications in remote locations where power is scarce. The coils are still driven in a continuous manner optimizing measurement performance and providing access to all diagnostic capabilities. Because of the reduced coil current, flow measurement accuracy is reduced to 1% of rate for low power systems. Table A-8 shows the power consumption that can be expected for various configurations. Due to the reduced coil current, sensor size is limited to a maximum line size of 10-in. (250 mm).

The low power option is available for integral mount with DC power only (option code 3) and output code . To ensure the sensor will support the low power functionality, option code D3 for a low power calibration must appear in the sensor model number.

Sample model numbers for a low power system are:

`8712EMR3M1N6M4DA1DA2`

`8705DHA020D7M0N6B3D3`

**Table A-8: Low power consumption**

| Output code | Power consumption | Flow accuracy | Measurement range |
|---|---|---|---|
| Output Code B<br>Utilize Pulse Output Only | 2 Watts Maximum | 1% of Rate | 0.04 fps to 39 fps<br>0.01 m/s to 12 m/s |
| Output Code B<br>Utilize Pulse and Analog Output | 3 Watts Maximum | 1% of Rate | 0.04 fps to 39 fps<br>0.01 m/s to 12 m/s |
| Output code M<br>Utilizing Modbus RS-485 and Pulse Output | 4 Watts Maximum | 1% of Rate | 0.04 fps to 39 fps<br>0.01 m/s to 12 m/s |

### Ambient temperature limits

- Operating:
  - –58 to 140 °F (–50 to 60 °C) without LOI/Display
  - –4 to 140 °F (–20 to 60 °C) with LOI/Display
  - The LOI/Display will not be visible at temperatures below –4 °F (–20 °C).
- Storage:
  - –58 to 185 °F (–50 to 85 °C) without LOI/Display
  - –22 to 176 °F (–30 to 80 °C) with LOI/Display

### Humidity limits

0–95% RH to 140 °F (60 °C)

### Altitude limits

AC Input Voltage: Maximum 250 VAC – Up to 2000 meters ( 6,500 feet)

AC Input Voltage: Maximum 150 VAC – Up to 4000 meters (13,000 feet)

DC Input Voltage: No altitude limit

### Transient protection rating

Built in transient protection that conforms to:

- IEC 61000-4-4 for burst currents
- IEC 61000-4-5 for surge currents
- IEC 611185-2.2000, Class 3 up to 2 kV and up to 2 kA protection

### Turn-on time

- 5 minutes to rated accuracy from power up
- 5 seconds from power interruption

### Start-up time

50ms from zero flow

### Low flow cut-off

Adjustable between 0.01 and 38.37 ft/s (0.003 and 11.7 m/s). Below selected value, output is driven to the zero flow rate signal level.

### Overrange capability

Signal output will remain linear until 110% of upper range value or 44 ft/s (13 m/s). The signal output will remain constant above these values. Out of range message displayed on LOI/Display and the Field Communicator.

### Damping

Adjustable between 0 and 256 seconds

## A.2.2 Advanced diagnostics capabilities

### Basic

- Self test
- Transmitter faults

- Analog output test
- Pulse output test
- Tunable empty pipe
- Reverse flow
- Ground/wiring fault
- Coil circuit fault
- Electronics temperature

#### Process diagnostics (DA1)

- High process noise
- Electrode coating diagnostic

#### Smart Meter Verification (DA2)

- Smart Meter Verification (continuous or commanded)

## A.2.3 Output signals

#### Analog alarm mode

High or low alarm signal is user-selectable via the Alarm switch on the front of the electronics. NAMUR-compliant alarm limits are software configurable and can be preset via CDS (C1). Individual diagnostic alarms are also software configurable. Alarms will drive the analog signal to the following mA values.

| | | |
|---|---|---|
| Low | 3.75 mA | Requires CDS (C1) |
| High | 22.60 mA | Factory default |
| NAMUR Low | 3.5 mA | Requires CDS (C1) |
| NAMUR High | 22.6 mA | Requires CDS (C1) |

#### Scalable pulse frequency adjustment

- 0-10,000 Hz, switch-selectable as internally or externally powered (1)
- Pulse value can be set to equal desired volume in selected engineering units
- Pulse width adjustable from 0.1 to 650 ms
- Internally powered: Outputs up to 12 VDC(2)
- Externally powered: Input 5 - 28 VDC

#### Output testing

**Pulse output test** Transmitter may be commanded to supply a specified frequency between 1 and 10,000 Hz.(1)

*(1) For transmitters with intrinsically safe outputs (option code B), frequency range is limited to 0-5000 Hz and must be powered externally.*
*(2) For transmitters with intrinsically safe outputs (option code B), power must be supplied externally.*

### Optional discrete output function (AX option)

Externally powered at 5 - 28 VDC, 240 mA max, solid state switch closure to indicate either:

| | |
|---|---|
| **Reverse flow** | Activates switch closure output when reverse flow is detected. |
| **Zero flow** | Activates switch closure output when flow goes to 0 ft/s or below low flow cutoff. |
| **Empty pipe** | Activates switch closure output when an empty pipe condition is detected. |
| **Transmitter faults** | Activates switch closure output when a transmitter fault is detected. |
| **Flow limit 1, flow limit 2** | Activates switch closure output when the transmitter measures a flow rate that meets the conditions established for this alert. There are two independent flow limit alerts that can be configured as discrete outputs. |
| **Totalizer limit** | Activates switch closure output when the transmitter measures a total flow that meets the conditions established for this alert. |
| **Diagnostic status** | Activates switch closure output when the transmitter detects a condition that meets the configured criteria of this output. |

### Optional discrete input function (AX option)

Externally powered at 5 - 28 VDC, 1.4 - 20 mA to activate switch closure to indicate either:

| | |
|---|---|
| **Reset Totalizer A (or B or C)** | Resets Totalizer A (or B or C) value to zero. |
| **Reset All Totals** | Resets all totalizer values to zero. |
| **Positive Zero Return (PZR)** | Forces outputs of the transmitter to zero flow. |

### Sensor compensation

Rosemount sensors are calibrated in a flow lab at the factory and are assigned a calibration number. The calibration number must be entered into the transmitter, enabling interchangeability of sensors without calculations or a compromise in standard accuracy.

Transmitters and other manufacturers' sensors can be calibrated at known process conditions or at the Rosemount NIST-Traceable Flow Facility. Transmitters calibrated on site require a two-step procedure to match a known flow rate. This procedure can be found in the operations manual.

## A.2.4 Performance specifications

**System specifications are given using the frequency output and with the unit at reference conditions.**

### Accuracy

Includes the combined effects of linearity, hysteresis, and repeatability.

### Rosemount 8705-M Sensor

- Standard system accuracy:
  - ±0.25% of rate ±1.0 mm/sec from 0.04 to 6 ft/s (0.01 to 2 m/s)
  - ±0.25% of rate ±1.5 mm/sec above 6 ft/s (2 m/s)
- Optional high accuracy:[3]
  - ±0.15% of rate ±1.0 mm/sec from 0.04 to 13 ft/s (0.01 to 4 m/s)
  - ±0.18% of rate above 13 ft/s (4 m/s)

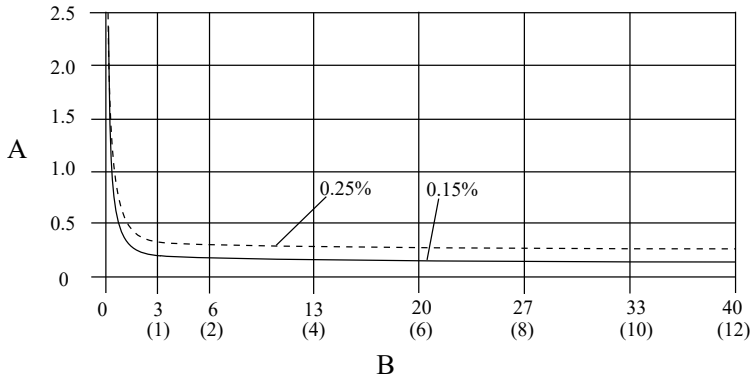


*A. Percentage of rate*
*B. Velocity in ft/s (m/s)*

### Rosemount 8711-M/L Sensor

- Standard system accuracy:
  - ±0.25% of rate ±2.0 mm/sec from 0.04 to 39 ft/s (0.01 to 12 m/s)
- Optional high accuracy:
  - ±0.15% of rate ±1.0 mm/sec from 0.04 to 13 ft/s (0.01 to 4 m/s)
  - ±0.18% of rate above 13 ft/s (4 m/s)

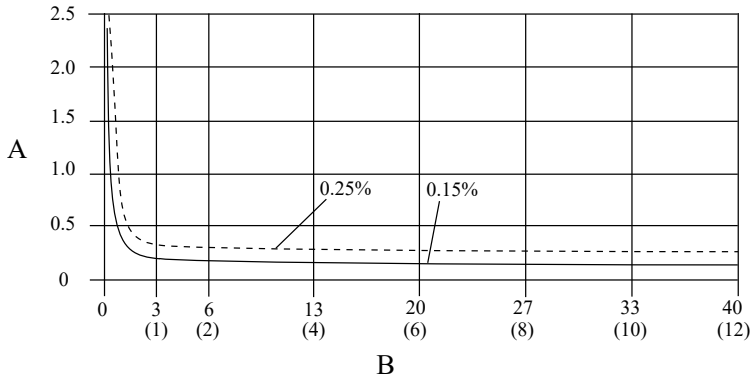


*A. Percentage of rate*
*B. Velocity in ft/s (m/s)*

*(3) For sensor sizes greater than 12 in. (300 mm), the high accuracy is ±0.25% of rate from 3 to 39 ft/sec (1 to 12 m/sec).*

### Rosemount 8721 Sensor

- Standard system accuracy:
  - ±0.5% of rate ±1.5 mm/s from 0.04 to 1.0 ft/s (0.01 and 0.3 m/s)
  - ±0.5% of rate from 1 to 39 ft/s (0.3 to 12 m/s)
- Optional high accuracy:
  - ±0.25% of rate from 3 to 39 ft/s (1 to 12 m/s):

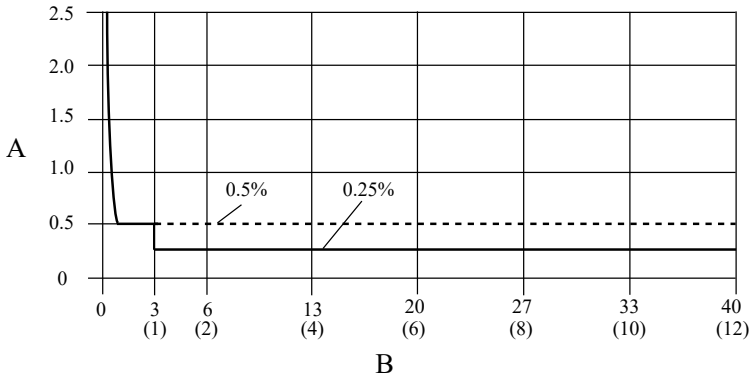


*A. Percentage of rate*
*B. Velocity in ft/s (m/s)*

### Other manufacturers' sensors

- When calibrated in the Rosemount Flow Facility, system accuracies as good as 0.5% of rate can be attained.
- There is no accuracy specification for other manufacturers' sensors calibrated in the process line.

### Analog output effects

Analog output has the same accuracy as frequency output plus an additional ±4 µ A at room temperature.

| | |
|---|---|
| Repeatability | ±0.1% of reading |
| Response time (analog output) | 20 ms max response time to step change in input |
| Stability | ±0.1% of rate over six months |
| Ambient temperature effect | ±0.25% change over operating temperature range |

## A.2.5 8712 Wall mount transmitter physical specifications

### Materials of construction

| | |
|---|---|
| Housing | Low copper aluminum<br>Type 4X and IEC 60529 IP66, IP69 |
| Paint | Polyurethane coat (1.8 to 2.2 mils thick) |
| Cover gaskets | Silicone |

### Electrical connections

| | |
|---|---|
| Conduit entries | ½–14 NPT or M20–1.5[1] |
| Terminal block screws | 6-32 (No. 6) suitable for up to 14 AWG wire |
| Safety grounding screws | External stainless assembly, M5; internal 8-32 (No. 8) |

*(1) M20–1.5 connections provided with an adapter.*

### Vibration rating

2G per IEC 61298

### Dimensions

See Product Data Sheet.

### Weight

| | |
|---|---|
| Wall mount transmitter | Approximately 11 lbs. (5 kg) |

Add 1 pound (0.5 kg) for LOI/Display.

## A.3 8705-M Flanged Sensor Specifications



### A.3.1 Functional specifications

#### Service

Conductive liquids and slurries

#### Line sizes

½ inch to 36 inch (15 mm to 900 mm)

#### Sensor coil resistance

2 - 20 Ω

#### Interchangeability

Rosemount 8705-M sensors are interchangeable with 8712EM and 8732EM transmitters. System accuracy is maintained regardless of line size or optional features. Each sensor nameplate has a sixteen-digit calibration number that can be entered into a transmitter during configuration.

#### Upper range limit

39.37 ft/s (12 m/s)

### Ambient temperature limits

- –20 to 140 °F (–29 to 60 °C) standard carbon steel housing design
- –58 to 140 °F (–50 to 60 °C) with "SH" all stainless housing design[4]

### Pressure limits

See Process temperature limits.

### Vacuum limits

| | |
|---|---|
| PTFE lining | Full vacuum to +350 °F (+177 °C) through 4-in. (100 mm) line sizes.<br>Consult an Emerson Flow representative for vacuum applications with line sizes of 6 inches (150 mm) or larger. |
| All other standard sensor lining materials | Full vacuum to maximum material temperature limits for all available line sizes. |

### Submergence protection IP68

The remote mount sensor is rated IP68 for continuous submergence. Tested to a depth of 33 ft (10 m) for a period of 48 hours. IP68 rating requires that the transmitter must be remote mount. Installer must use IP68 approved cable glands, conduit connections, and/or conduit plugs.

### Conductivity limits

Process liquid must have a conductivity of 5 microSiemens/cm or greater. Consult an Emerson Flow representative for conductivity less than 5 microSiemens/cm.

### Process temperature limits

| | |
|---|---|
| PTFE lining | –58 to +350 °F (–50 to +177 °C) |
| ETFE lining | –58 to +300 °F (–50 to +149 °C) |
| PFA and PFA+ lining | –58 to +350 °F (–50 to +177 °C) |
| Polyurethane lining | 0 to +140 °F (–18 to +60 °C) |
| Neoprene lining | 0 to +176 °F (–18 to +80 °C) |
| Linatex lining | 0 to +158 °F (–18 to +70 °C) |
| Adiprene lining | 0 to +200 °F (–18 to +93 °C) |

### Notes

- Carbon steel flanges for PED have a minimum process temperature limit of 32 °F (0 °C).
- Sensors ordered with hazardous location ratings may have different maximum process temperature limits. The sensors must be installed and used as directed by the installation drawing number noted on the serial nameplate.

*(4) Not available for Class/Div approval codes N5, N6, K5, KU.*

### Table A-9: Temperature vs. Pressure Limits for ASME B16.5 class flanges [1]

| Sensor temperature vs. pressure limits for ASME B16.5 class flanges (up to 36 inch line sizes)[2] | | | | | |
|---|---|---|---|---|---|
| **Flange material** | **Flange rating** | **Pressure** | | | |
| | | **@ -20 to 100 °F (-29 to 38 °C)** | **@ 200 °F (93 °C)** | **@ 300 °F (149 °C)** | **@ 350 °F (177 °C)** |
| Carbon Steel | Class 150 | 285 psi | 260 psi | 230 psi | 215 psi |
| | Class 300 | 740 psi | 680 psi | 655 psi | 645 psi |
| | Class 600[3] | 1000 psi | 800 psi | 700 psi | 650 psi |
| | Class 600[4] | 1480 psi | 1350 psi | 1315 psi | 1292 psi |
| | Class 900 | 2220 psi | 2025 psi | 1970 psi | 1935 psi |
| | Class 1500 | 3705 psi | 3375 psi | 3280 psi | 3225 psi |
| | Class 2500 | 6170 psi | 5625 psi | 5470 psi | 5375 psi |
| 304/304L Stainless Steel<br>316/316L Stainless Steel | Class 150 | 275 psi | 235 psi | 205 psi | 190 psi |
| | Class 300 | 720 psi | 620 psi | 530 psi | 500 psi |
| | Class 600[3] | 1000 psi | 800 psi | 700 psi | 650 psi |
| | Class 600[4] | 1440 psi | 1200 psi | 1055 psi | 997 psi |
| | Class 900 | 2160 psi | 1800 psi | 1585 psi | 1497 psi |
| | Class 1500 | 3600 psi | 3000 psi | 2640 psi | 2495 psi |
| | Class 2500 | 6000 psi | 5000 psi | 4400 psi | 4160 psi |

*(1) Liner temperature limits must also be considered.*
*(2) 30-in. and 36-in. AWWA C207 Class D rated to 150 psi at atmospheric temperature.*
*(3) Flange rating Code 6.*
*(4) Flange rating Code 7.*

### Table A-10: Temperature vs. Pressure Limits for AS2129 Table D and E flanges [1]

| Sensor temperature vs. pressure limits for AS2129 Table D and E flanges (4 inch to 24 inch line sizes) | | | | | |
|---|---|---|---|---|---|
| **Flange Material** | **Flange Rating** | **Pressure** | | | |
| | | **@ -29 to 50 °C (-20 to 122 °F)** | **@ 100 °C (212 °F)** | **@ 150 °C (302 °F)** | **@ 200 °C (392 °F)** |
| Carbon Steel | D | 101.6 psi | 101.6 psi | 101.6 psi | 94.3 psi |
| | E | 203.1 psi | 203.1 psi | 203.1 psi | 188.6 psi |

*(1) Liner temperature limits must also be considered.*

**Table A-11: Temperature vs. Pressure Limits for EN 1092-1 flanges [1]**

| Sensor temperature vs. pressure limits for EN 1092-1 flanges (15 mm to 600 mm Line Sizes) | | | | | |
|---|---|---|---|---|---|
| **Flange material** | **Flange rating** | **Pressure** | | | |
| | | **@ -29 to 50 °C (-20 to 122 °F)** | **@ 100 °C (212 °F)** | **@ 150 °C (302 °F)** | **@ 175 °C (347 °F)** |
| Carbon Steel | PN 10 | 10 bar | 10 bar | 9.7 bar | 9.5 bar |
| | PN 16 | 16 bar | 16 bar | 15.6 bar | 15.3 bar |
| | PN 25 | 25 bar | 25 bar | 24.4 bar | 24.0 bar |
| | PN 40 | 40 bar | 40 bar | 39.1 bar | 38.5 bar |
| 304/304L Stainless Steel<br>316/316L Stainless Steel | PN 10 | 9.1 bar | 7.5 bar | 6.8 bar | 6.5 bar |
| | PN 16 | 14.7 bar | 12.1 bar | 11.0 bar | 10.6 bar |
| | PN 25 | 23 bar | 18.9 bar | 17.2 bar | 16.6 bar |
| | PN 40 | 36.8 bar | 30.3 bar | 27.5 bar | 26.5 bar |

*(1) Liner temperature limits must also be considered.*

## A.3.2 Physical specifications

Emerson Rosemount magnetic flow meters are designed to the standards defined in ASME B31.3. This standard is used as the basis for all of our other pressure vessel certifications such as CRN and PED.

### Non-wetted materials

| | |
|---|---|
| Sensor Pipe | Type 304/304L SST or Type 316/316L SST |
| Flanges[1] | Flat-Face (FF) and Raised-Face (RF) |
| Coil housing | Rolled carbon steel or 300 series stainless steel |
| Remote junction box | Painted aluminum |
| Paint | Polyurethane coat (2.6 mils or greater) |
| Optional coil housing | 316/316L unpainted, option code SH |
| Optional remote junction box | 316/316L, unpainted, option code SJ; included with option code SH |

*(1) Ambient temperature low limit for A105 carbon steel is –20 °F (–29 °C) per ANSI B16.5. For colder ambient environments, stainless steel flanges must be used.*

### Process-wetted materials

| | |
|---|---|
| Flanges[1] | Ring Type Joint (RTJ) |
| Lining | PTFE, ETFE, PFA, Polyurethane, Neoprene, Linatex, Adiprene, PFA+ |
| Electrodes | 316L SST, Nickel Alloy 276 (UNS N10276), Tantalum, 80% Platinum-20% Iridium, Titanium |

*(1) Ambient temperature low limit for A105 carbon steel is –20 °F (–29 °C) per ANSI B16.5. For colder ambient environments, stainless steel flanges must be used.*

### Flat-faced flanges

Sensors ordered with flat-faced flanges and Neoprene or Linatex liners are manufactured with the liner extending to the outer dimension of the flange. All other liner selections extend to the diameter of raised face dimension and create a raised surface on the flange face.

### Process connections

| | |
|---|---|
| ASME B16.5 | • Class 150 and Class 300: ½ inch to 24 inch (15 mm to 600 mm)<br>• Class 600: ½ inch to 24 inch (15 mm to 600 mm)(1)<br>• Class 900: 1 inch to 12 inch (25 mm to 300 mm)(2)<br>• Class 1500: 1½ inch to 12 inch (40 mm to 300 mm)(2)<br>• 1½ inch to 6 inch (40 mm to 150 mm)(2) |
| ASME B16.47 | • Class 150: 30 inch to 36 inch (750 mm to 900 mm)<br>• Class 300: 30 inch to 36 inch (750 mm to 900 mm) |
| AWWA C207 | • Class D: 30 inch and 36 inch (750 mm and 900 mm) |
| MSS SP44 | • Class 150: 30 inch to 36 inch (750 mm to 900 mm) |
| EN 1092-1 | • PN10: 200 mm to 900 mm (8 inch to 36 inch)<br>• PN16: 100 mm to 900 mm (4 inch to 36 inch)<br>• PN25: 200 mm to 900 mm (8 inch to 36 inch)<br>• PN40: 15 mm to 900 mm (½ inch to 36 inch) |
| AS2129 | • Table D and Table E: 15 mm to 900 mm (½ inch to 36 inch) |
| AS4087 | • PN16, PN21, PN35: 50 mm to 600 mm (2 inch to 24 inch) |
| JIS B2220 | • 10K, 20K, 40K: 15 mm to 200 mm (½ inch to 8 inch) |

*(1) For PTFE, PFA, PFA+, and ETFE, maximum working pressure is derated to 1000 psig.*
*(2) For Class 900 and higher flange ratings, liner selection is limited to resilient liners.*

### Electrical connections

| | |
|---|---|
| Conduit entries | Available with ½ inch NPT and M20 |
| Terminal block screws | 6-32 (No. 6) suitable for up to 14 AWG wire |
| Safety grounding screws | External stainless assembly, M5; internal 8-32 (No. 8) |

### Process reference electrode (optional)

A process reference electrode can be installed similarly to the measurement electrodes through the sensor lining. It will be made of the same material as the measurement electrodes.

### Grounding rings (optional)

Grounding rings can be installed between the flange and the sensor face on both ends of the sensor. Single ground rings can be installed on either end of the sensor. They have an I.D. slightly larger than the sensor I.D. and an external tab to attach ground straps. Grounding rings are available in 316L SST, Nickel Alloy 276 (UNS N10276), titanium, and tantalum. See Product Data Sheet.

### Lining protectors (optional)

Lining protectors can be installed between the flange and the sensor face on both ends of the sensor. The leading edge of lining material is protected by the lining protector; lining protectors cannot be removed once they are installed. Lining protectors are available in 316L SST, Nickel Alloy 276 (UNS N10276), and titanium. See Product Data Sheet.

### Dimensions

See Product Data Sheet.

### Weight

See Product Data Sheet.

## A.4 8711-M/L Wafer Sensor Specifications



### A.4.1 Functional specifications

#### Service

Conductive liquids and slurries

#### Line sizes

1.5-in. to 8-in. (40 mm to 200 mm)

#### Sensor coil resistance

10 - 18 Ω

#### Interchangeability

Rosemount 8711-M/L Sensors are interchangeable with 8712EM and 8732EM Transmitters. System accuracy is maintained regardless of line size or optional features. Each sensor nameplate has a sixteen-digit calibration number that can be entered into a transmitter during configuration.

#### Upper range limit

39.37 ft/s (12 m/s)

#### Process temperature limits

| | |
|---|---|
| ETFE lining | -20 to 300 °F (–29 to 149 °C) |
| PTFE lining | -20 to 350 °F (-29 to 177 °C) |

#### Ambient temperature limits

–20 to 140 °F (–29 to 60 °C)

### Maximum safe working pressure at 100 °F (38 °C)

| | |
|---|---|
| ETFE lining | Full vacuum to 740 psi (5.1 MPa) |
| PTFE lining | • Line sizes 1.5-in. (40 mm) through 4-in. (100 mm); Full vacuum to 740 psi (5.1 MPa)<br>• Consult Technical Support for vacuum applications with line sizes of 6-in. (150 mm) or larger |

### Submergence protection IP68

The remote mount sensor is rated IP68 for continuous submergence. Tested to a depth of 33 ft (10 m) for a period of 48 hours. IP68 rating requires that the transmitter must be remote mount. Installer must use IP68 approved cable glands, conduit connections, and/or conduit plugs.

### Conductivity limits

Process liquid must have a minimum conductivity of 5 microSiemens/cm (5 micromhos/cm) or greater for 8711.

## A.4.2 Physical specifications

### Non-wetted materials

| | |
|---|---|
| Sensor body | • 303 SST<br>• CF3M or CF8M<br>• Type 304/304L |
| Coil housing | Rolled carbon steel |
| Remote junction box | Painted aluminum |
| Paint | Polyurethane coat (2.6 mils or greater) |

### Process-wetted materials

| | |
|---|---|
| Lining | PTFE, ETFE |
| Electrodes | 316L SST, Nickel Alloy 276 (UNS N10276), Tantalum, 80% Platinum—20% Iridium, Titanium |

### Electrical connections

| | |
|---|---|
| Conduit entries | Available with 1/2 inch NPT and M20. See ordering table footnotes for details |
| Terminal block screws | 6-32 (No. 6) suitable for up to 14 AWG wire |
| Safety grounding screws | External stainless assembly, M5; internal 8-32 (No. 8) |

### Process reference electrode (optional)

A process reference electrode can be installed similarly to the measurement electrodes through the sensor lining. It will be made of the same material as the measurement electrodes.

### Grounding rings (optional)

Grounding rings can be installed between the flange and the sensor face on both ends of the sensor. They have an I.D. slightly smaller than the sensor I.D. and an external tab to attach ground wiring. Grounding rings are available in 316L SST, Nickel Alloy 276 (UNS N10276), titanium, and tantalum.

### Dimensions

See Product Data Sheet.

### Weight

See Product Data Sheet.

### Process connections—Mounts between these flange configurations

| | |
|---|---|
| ASME B16.5 | Class 150, 300 |
| EN 1092-1 | PN10, PN16, PN25, PN40 |
| JIS B2220 | 10K, 20K |
| AS4087 | PN16, PN21, PN35 |

### Studs, nuts, and washers—MK2-carbon steel

| Component | ASME B16.5 | EN1092-1 |
|---|---|---|
| Studs, full thread | CS, ASTM A193, Grade B7 | CS, ASTM A193, Grade B7 |
| Hex nuts | ASTM A194 Grade 2H | ASTM A194 Grade 2H; DIN 934 H = D |
| Flat washers | CS, Type A, Series N, SAE per ANSI B18.2.1 | CS, DIN 125 |
| All items | Clear, chromate zinc-plated | Yellow zinc-plated |

### Studs, nuts, and washers—MK3-316 SST

| Component | ASME B16.5 | EN1092-1 |
|---|---|---|
| Studs, full thread | ASTM A193, Grade B8M Class 1 | ASTM A193, Grade B8M Class 1 |
| Hex nuts | ASTM A194 Grade 8M | ASTM A194 Grade 8M; DIN 934 H = D |
| Flat washers | 316 SST, Type A, Series N, SAE per ANSI B18.2.1 | 316 SST, DIN 125 |

## A.5 8721 Hygienic (Sanitary) Sensor Specifications



## A.5.1 Functional specifications

### Service

Conductive liquids and slurries

### Line sizes

1/2 -in. to 4-in. (15 mm to 100 mm)

### Sensor coil resistance

5 -10 Ω

### Interchangeability

Rosemount 8721 sensors are interchangeable with Rosemount 8712EM and 8732EM transmitters. System accuracy is maintained regardless of line size or optional features. Each sensor label has a 16 digit calibration number that can be entered into the transmitter during configuration.

### Conductivity limits

Process liquid must have a minimum conductivity of 5 microSiemens/cm (5 micromhos/cm) or greater. Excludes the effect of interconnecting cable length in remote mount transmitter installations.

### Flow rate range

Capable of processing signals from fluids that are traveling between 0.04 and 39 ft/s (0.01 to 12 m/s) for both forward and reverse flow in all sensor sizes. Full scale continuously adjustable between –39 and 39 ft/s (–12 to 12 m/s).

### Sensor ambient temperature limits

14 to 140 °F (–15 to 60 °C)

### Process temperature limits

**PFA lining** -20 to 350 °F (-29 to 177 °C)

### Table A-12: Pressure limits

| Line size | Max working pressure | CE mark max. working pressure |
|---|---|---|
| 1/2 -in. (15 mm) | 300 psi (20.7 bar) | 300 psi (20.7 bar) |
| 1-in. (25 mm) | 300 psi (20.7 bar) | 300 psi (20.7 bar) |
| 1 1/2 -in. (40 mm) | 300 psi (20.7 bar) | 300 psi (20.7 bar) |
| 2-in. (50 mm) | 300 psi (20.7 bar) | 300 psi (20.7 bar) |
| 2 1/2 -in. (65 mm) | 300 psi (20.7 bar) | 240 psi (16.5 bar) |
| 3 -in. (80 mm) | 300 psi (20.7 bar) | 198 psi (13.7 bar) |
| 4-in. (100 mm) | 210 psi (14.5 bar) | 148 psi (10.2 bar) |

### Vacuum limits

Full vacuum at maximum lining material temperature; consult Technical Support.

### Submergence protection IP68

The remote mount 8721 sensor is rated IP68 for submergence to a depth of 33 ft (10 m) for a period of 48 hours. IP68 rating requires that the transmitter must be remote mount. Installer must use IP68 approved cable glands, conduit connections, and/or conduit plugs.

## A.5.2 Physical specifications

### Mounting

Integrally mounted transmitters are factory-wired and do not require interconnecting cables. The transmitter can rotate in 90° increments. Remote-mounted transmitters require only a single conduit connection to the sensor.

### Non-wetted materials

| | |
|---|---|
| Sensor | 304 Stainless Steel (wrapper), 304 Stainless Steel (pipe) |
| Terminal junction box | Low copper aluminumOptional: 304 Stainless Steel |

### Process wetted materials (sensor)

| | |
|---|---|
| Liner | PFA with Ra < 32µ in. (0.81 µm) |
| Electrodes | • 316L SST with Ra < 15µ in. (0.38 µm)<br>• Nickel Alloy 276 (UNS N10276) with Ra < 15µ in. (0.38 µm)<br>• 80% Platinum-20% Iridium with Ra < 15µ in. (0.38 µm) |

### Process connections

The Rosemount 8721 Sanitary Sensor is designed using a standard IDF fitting as the basis for providing a flexible, hygienic interface for a variety of process connections. The Rosemount 8721 Sensor has the threaded or “male” end of the IDF fitting on the ends of the base sensor. The sensor can be directly connected with user supplied IDF fittings and gaskets. If other process connections are needed, the IDF fittings and gaskets can be provided and welded directly into the sanitary process tubing, or can be supplied with adapters to standard Tri Clamp process connections. All connections are PED compliant for group 2 fluids.

| | |
|---|---|
| Tri Clamp sanitary coupling | • IDF Sanitary Coupling (screw type)<br>• IDF specification per BS4825 part 4<br>• ANSI Weld Nipple<br>• DIN 11850 Weld Nipple<br>• DIN 11851 (Imperial and Metric)<br>• DIN 11864-1 form A<br>• DIN 11864-2 form A<br>• SMS 1145<br>• Cherry-Burrell I-Line |

### Process connection material

- 316L Stainless Steel with Ra < 32µ in. (0.81µm)
- Optional Electropolished Surface Finish with Ra < 15µ in. (0.38µ m)

### Process connection gasket material

- Silicone
- EPDM
- Viton

### Electrical connections

| | |
|---|---|
| Conduit entries | ½ -in. NPT standard, M20 adapters |
| Terminal block screws | M3 |
| Safety grounding screws | External stainless assembly, M5; internal 6-32 (No. 6) |

### Dimensions

See Product Data Sheet.

### Weight

#### Table A-13: 8721 Sensor Weight

| Line size | Sensor only | 008721-0350 Tri Clamp fitting (Each) |
|---|---|---|
| 1/2 -in. (15 mm) | 4.84 lbs (2.20 kg) | 0.58 lbs (0.263 kg) |
| 1-in. (25 mm) | 4.52 lbs (2.05 kg) | 0.68 lbs (0.309 kg) |
| 1 1/2 -in. (40 mm) | 5.52 lbs (2.51 kg) | 0.88 lbs (0.400 kg) |
| 2-in. (50 mm) | 6.78 lbs (3.08 kg) | 1.30 lbs (0.591 kg) |
| 2 1/2 -in. (65 mm) | 8.79 lbs (4.00 kg) | 1.66 lbs (0.727 kg) |
| 3 -in. (80 mm) | 13.26 lbs (6.03 kg) | 2.22 lbs (1.01 kg) |
| 4-in. (100 mm) | 21.04 lbs (9.56 kg) | 3.28 lbs (1.49 kg) |

| | |
|---|---|
| Aluminum remote junction box | • Approximately 1 lb. (0.45 kg)<br>• Paint - Polyurethane (1.3 to 5 mils) |
| SST remote junction box | • Approximately 2.5 lbs. (1.13 kg)<br>• Unpainted |

# B Product certifications

For detailed approval certification information and installation drawings, please see the appropriate document listed below:

- Document number 00825-MA00-0001: *Rosemount 8700M Approval Document - IECEx and ATEX*
- Document number 00825-MA00-0002: *Rosemount 8700M Approval Document – Class Division*
- Document number 00825-MA00-0003: *Rosemount 8700M Approval Document - North America Zone*
- Document number 00825-MA00-0007: *Rosemount 8700M Approval Document - NEPSI EN Zone 1 China*

# C Wiring Diagrams

## C.1 Wiring sensor to transmitter

**Figure C-1: Wiring using component cable**

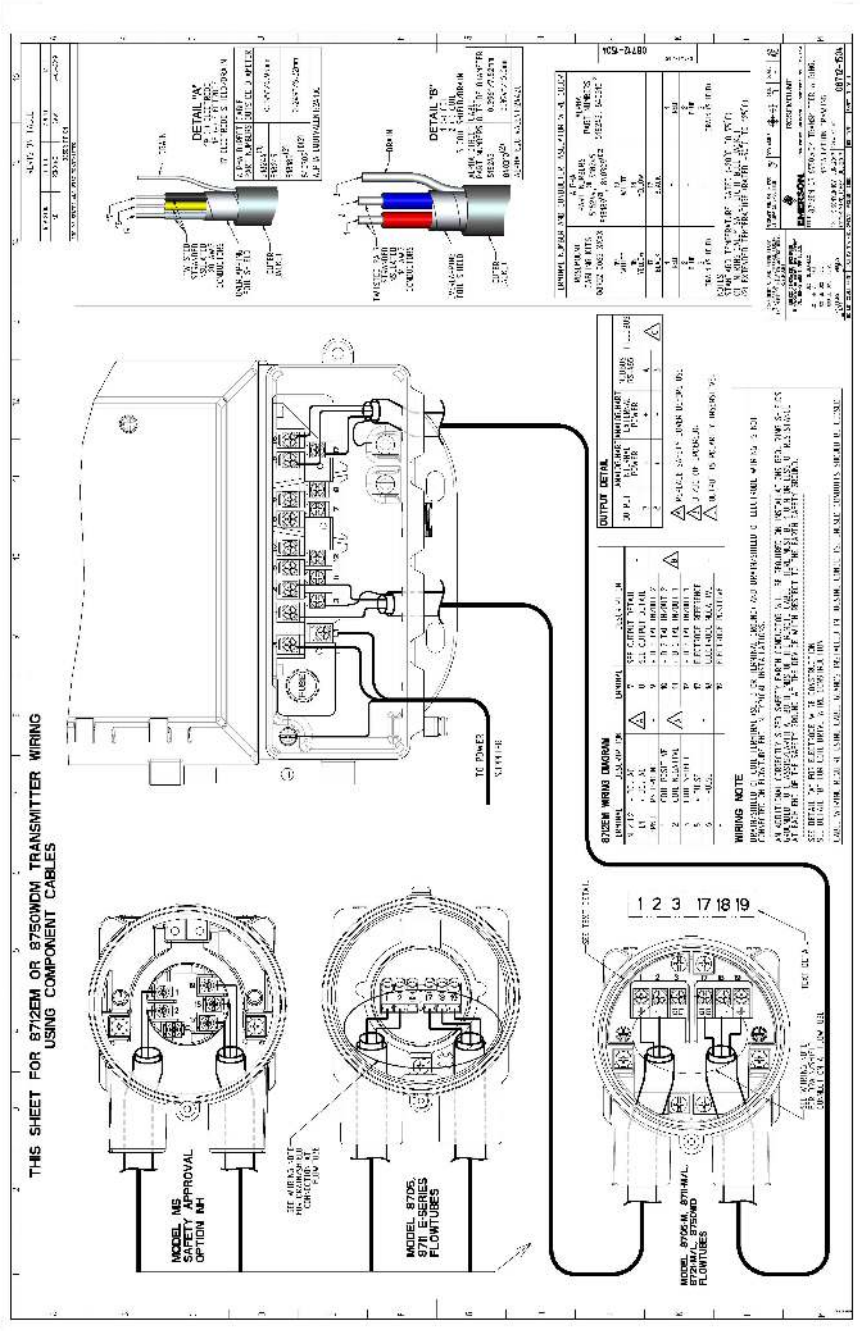

**Figure C-2: Wiring using combination cable**

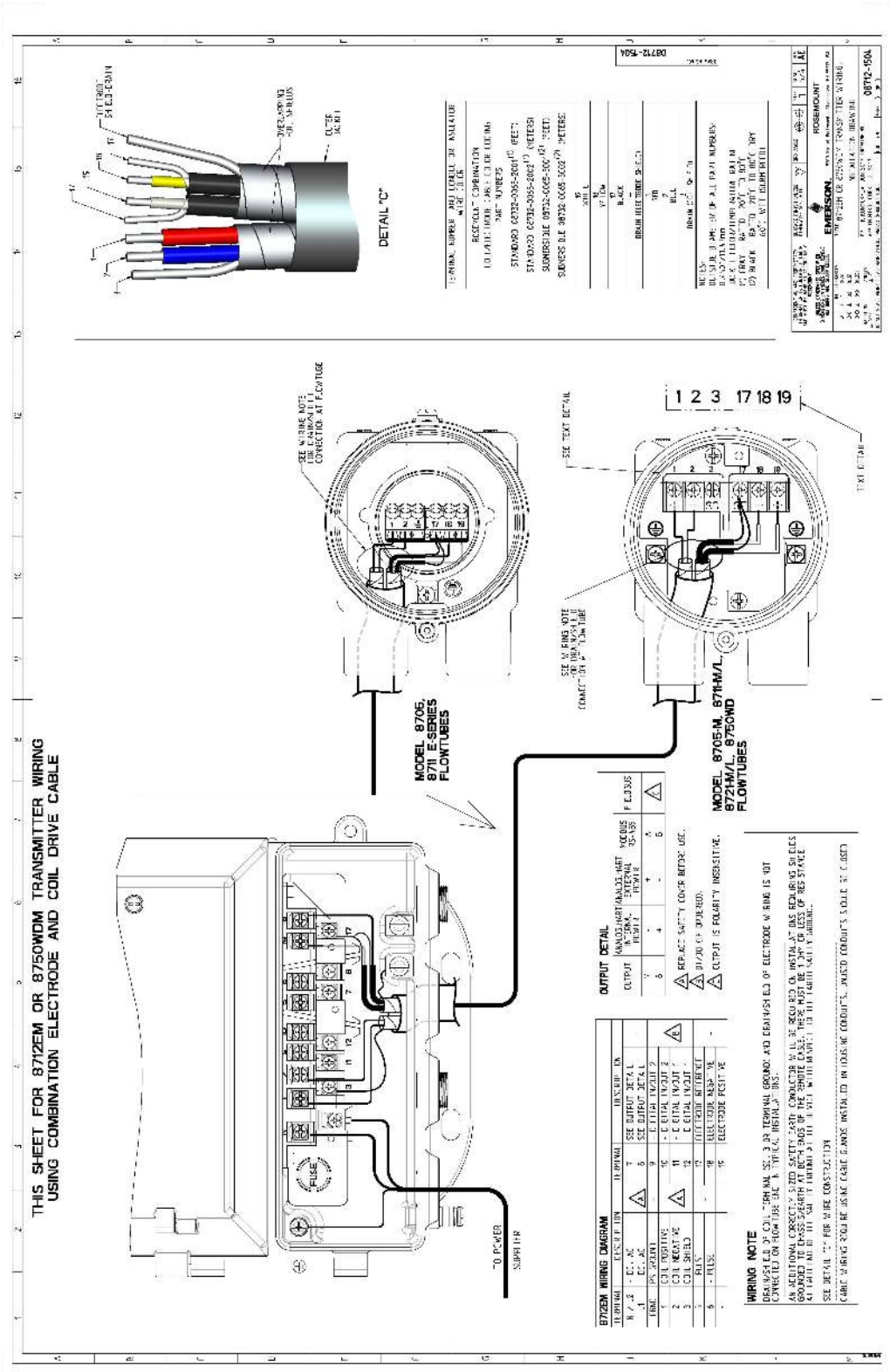

# C.2 775 Smart Wireless THUM™ Adapter wiring diagrams

**Figure C-3: Wiring diagram—775 Smart Wireless THUM Adapter with transmitter internal analog power**

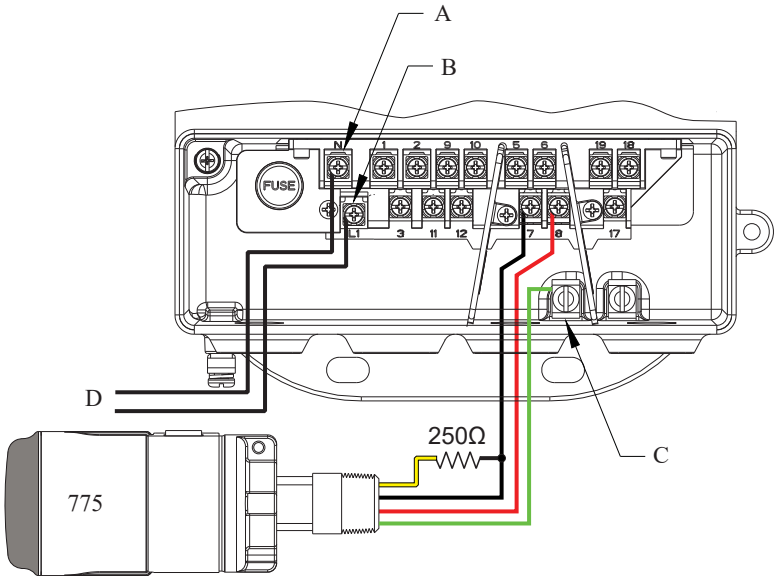


*A. AC neutral or DC -*
*B. AC Line or DC +*
*C. AC or DC Ground*
*D. Transmitter Power*

**Table C-1: 775 wiring guide**

| Wire color | Connect to... |
|---|---|
| Red | Transmitter (+) pin 8 |
| Black | Transmitter (–) pin 7 and 250Ω |
| Yellow | 250Ω |
| Green | Transmitter housing |
| White | No connection |

**Figure C-4: Wiring diagram—775 Smart Wireless THUM Adapter with transmitter external analog power**

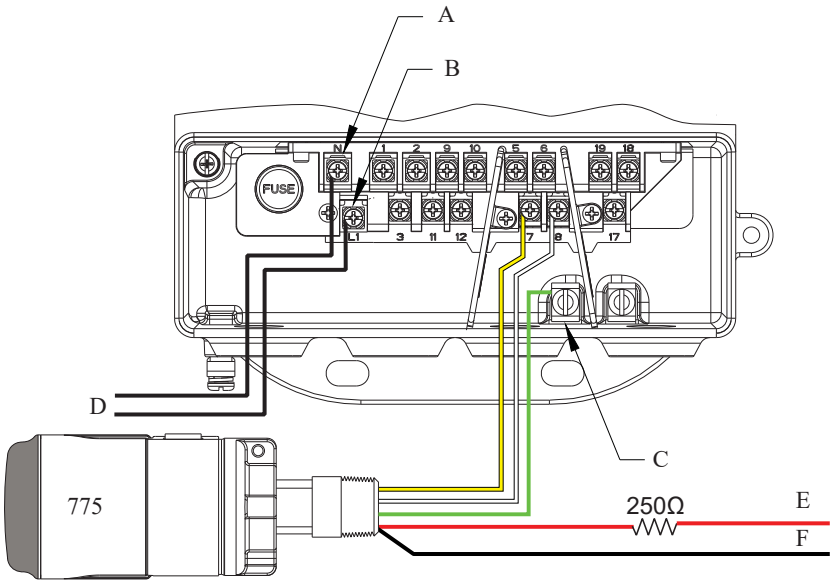


*A. AC neutral or DC -*
*B. AC Line or DC +*
*C. AC or DC Ground*
*D. Transmitter Power*
*E. 4–20mA +*
*F. 4–20mA –*

**Table C-2: 775 wiring guide**

| Wire color | Connect to... |
|---|---|
| Red | Transmitter (+) pin 8 |
| Black | Transmitter (–) pin 7 and 250Ω |
| Yellow | 250Ω |
| Green | Transmitter housing |
| White | No connection |

# C.3 Field Communicator wiring diagrams

**Figure C-5: Wiring diagram—Field Communicator with transmitter internal analog power**

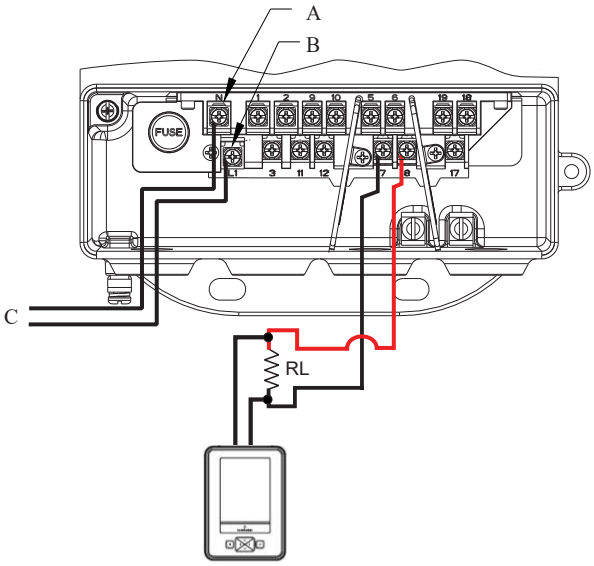


*A. AC neutral or DC–*
*B. AC line or DC +*
*C. Transmitter power*

**Figure C-6: Wiring diagram—Field Communicator with transmitter external analog power**

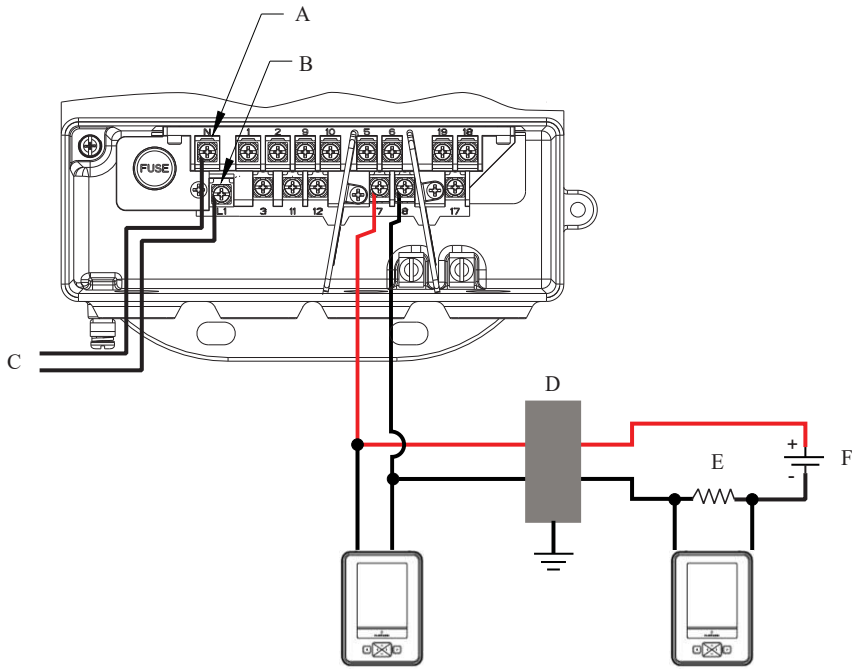


*A. AC neutral or DC–*
*B. AC line or DC +*
*C. Transmitter power*
*D. Intrinsic safety barrier, if required.*
*E. RL*
*F. 24 VDC*

# D Implementing a Universal Transmitter

## D.1 Safety messages

Instructions and procedures in this section may require special precautions to ensure the safety of the personnel performing the operations. Please read the following safety messages before performing any operation described in this section.

**⚠ WARNING**

The transmitter has not been evaluated for use with other manufacturers' magnetic flowmeter sensors in hazardous (Ex or Classified) areas. Special care should be taken by the end-user and installer that the transmitter meets the safety and performance requirements of the other manufacturer’s equipment.

## D.2 Universal capability

The transmitter has the ability to drive other manufacturers' sensors. In addition to providing a flow measurement, all diagnostic functionality is available. This capability can provide additional information about the installation, the process, and the health of the sensor. Universal capabilities enable a common maintenance practice for all magnetic flowmeter installations and help reduce spares inventory of magnetic flowmeter transmitters.

This section provides wiring diagrams for connecting the transmitter to other manufacturers' sensors, and describes how to configure the universal capabilities.

## D.3 Three step process

There are three steps to implementing a universal transmitter:

**Procedure**

1. Review the existing application. Verify that the existing sensor is in good working order, and that it is compatible with a universal transmitter.

   Locate the wiring diagram (in this Appendix) that applies to your sensor. While the Universal transmitter may be able to drive the existing sensor, if the sensor is not in good working order, the universal transmitter may not function correctly.

2. Connect the universal transmitter to the existing sensor using the appropriate wiring diagram from this appendix.

   If the sensor you are using is not listed in this appendix, contact Rosemount technical support for more details on the application of the universal capabilities.

3. Configure the transmitter following the guidelines in Operation and Advanced Configuration Functionality, setting up parameters as needed.

   One of the key configuration parameters is the sensor calibration number. There are several methods to determine the calibration number, but the most common method will be to use the universal trim capability. This functionality is detailed in

this appendix. Accuracy of the meter when the universal trim is used to determine the calibration number will be dependent on the accuracy of the known flow rate used in the trim process.

In addition to the universal trim, there are two other methodologies for determining a calibration number for the sensor:

Method 1: Have the sensor sent to a Rosemount service center for determination of a calibration number compatible with the universal transmitter. This is the most accurate method for determining the calibration number and will provide a ±0.5% of rate measurement accuracy from 3 to 40 fps (1-10 m/s).

Method 2: Involves the conversion of the existing sensor calibration number / meter factors to an equivalent Rosemount 16-digit calibration number. Accuracy of the meter using this methodology is estimated to be in the range of 2-3%. Contact the Rosemount technical support for more information on this method or to determine a calibration number for the existing sensor.

Once these steps are completed, the meter will begin measuring flow. Verify the measured flow rate is within the expected range and that the output correctly corresponds to the measured flow rate. Also verify the reading in the control system matches the reading at the transmitter. Once these items have been verified, the loop can be placed into automatic control as needed.

### D.3.1 Universal trim

The universal auto trim function enables the transmitter to determine a calibration number for sensors that were not calibrated at the factory. See Universal trim.

## D.4 Wiring the universal transmitter

The wiring diagrams in this section illustrate the proper connections between the transmitter and most sensors currently on the market. Specific diagrams are included for most models, and where information for a particular model of a manufacturer is not available, a generic drawing pertaining to that manufacturer's sensors is provided. If the manufacturer for the existing sensor is not included, see the drawing for generic connections.

Any trademarks used herein regarding sensors not manufactured by Rosemount are owned by the particular manufacturer of the sensor.

## D.5 Rosemount sensors

### D.5.1 8705/8707/8711/8721 Sensors to 8712 Transmitter

To connect a Rosemount 8705/8707/8711/8721 Sensor to a Rosemount 8712 Transmitter, connect coil drive and electrode cables as shown in Figure D-1.

**⚠ CAUTION**

Do not connect mains or line power to the magnetic flowtube sensor or to the transmitter coil excitation circuit.

**Figure D-1: Wiring Diagram for a Rosemount 8712 Transmitter**

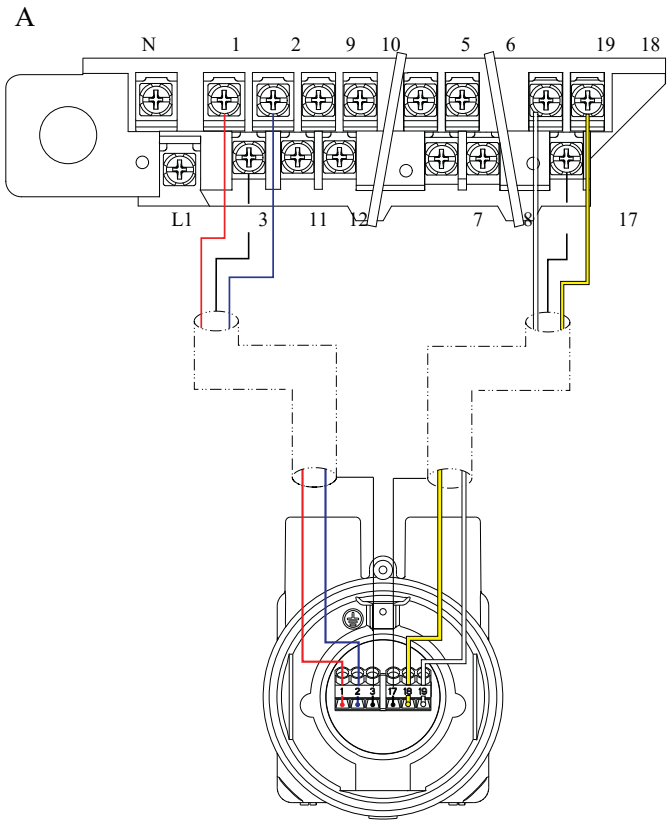


*A. Rosemount 8712 transmitter*

**Table D-1: Rosemount 8705/8707/8711/8721 Sensor Wiring Connections**

| Rosemount 8712 Transmitters | Rosemount 8705/8707/8711/8721 Sensors |
|---|---|
| 1 | 1 |
| 2 | 2 |
| 3 | 3 |
| 17 | 17 |
| 18 | 18 |
| 19 | 19 |

## D.5.2 8705 M and 8711 M/L Sensors to 8712EM Transmitter

To connect a Rosemount 8705 M or 8711 M/L Sensor to a Rosemount 8712EM Transmitter, connect coil drive and electrode cables as shown in Figure D-2.

**⚠ CAUTION**

Do not connect mains or line power to the magnetic flowtube sensor or to the transmitter coil excitation circuit.

**Figure D-2: Wiring Diagram for a Rosemount 8712EM Transmitter**

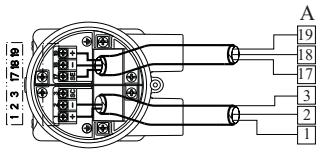


*A. Rosemount 8712 transmitter*

**Table D-2: Rosemount 8705/8711 Sensor Wiring Connections**

| Rosemount 8712 Transmitters | Rosemount 8705/8711 Sensors |
|---|---|
| 1 | 1 / + |
| 2 | 2 / – |
| 3 | 3 / SC |
| 17 | 17 / SE |
| 18 | 18 / – |
| 19 | 19 / + |

## D.5.3 8701 sensor to 8712 transmitter

To connect a Rosemount 8701 sensor to a Rosemount 8712 Transmitter, connect coil drive and electrode cables as shown in Figure D-3 .

**⚠ CAUTION**

Do not connect mains or line power to the magnetic flowtube sensor or to the transmitter coil excitation circuit.

**Figure D-3: Wiring Diagram for Rosemount 8701 Sensor and Rosemount 8712 Transmitter**

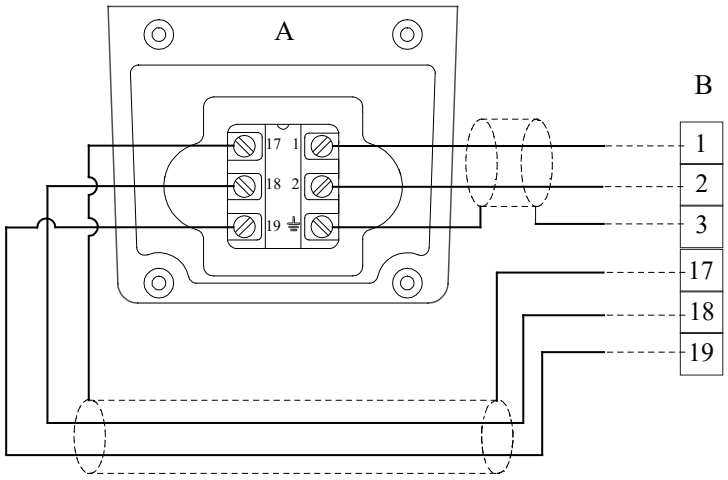


*A. Rosemount 8701 sensor*
*B. Rosemount 8712 transmitter*

**Note**
Refer to Figure D-1 for actual terminal block configuration drawing.

**Table D-3: Rosemount 8701 Sensor Wiring Connections**

| Rosemount 8712 | Rosemount 8701 sensors |
|---|---|
| 1 | 1 |
| 2 | 2 |
| 3 | 3 |
| 17 | 17 |
| 18 | 18 |
| 19 | 19 |

## D.5.4 Connecting sensors of other manufacturers

### Prerequisites

Before connecting another manufacturer's sensor to the transmitter, it is necessary to perform the following functions.

**⚠ CAUTION**

Do not connect mains or line power to the magnetic flowtube sensor or to the transmitter coil excitation circuit.

### Procedure

1. Turn off the AC power to the sensor and transmitter.

**⚠ CAUTION**

Failure to do so could result in electrical shock or damage to the transmitter.

2. Verify the coil drive cables between the sensor and the transmitter are not connected to any other equipment.
3. Label the coil drive cables and electrode cables for connection to the transmitter.
4. Disconnect the wires from the existing transmitter.
5. Remove the existing transmitter and then mount the new transmitter.

   See Remote Transmitter Installation.

6. Verify the sensor coil is configured for series connection.

   Other manufacturers sensors may be wired in either a series or parallel circuit. All Rosemount magnetic sensors are wired in a series circuit. (Other manufacturers AC sensors (AC coils) wired for 220 V operation are typically wired in parallel and must be rewired in series.)

7. Use the manufacturer's recommended test procedure for verification of sensor condition to verify the sensor is in good working condition. Perform the basic checks:
   a) Check the coils for shorts or open circuits.
   b) Check the sensor liner for wear or damage.
   c) Check the electrodes for shorts, leaks, or damage.
8. Connect the sensor to the transmitter in accordance with reference wiring diagrams.

   See Wiring Diagrams for specific drawings.

9. Connect and verify all connections between the sensor and the transmitter, then apply power to the transmitter.
10. Perform the Universal Auto Trim function.

# D.6 Brooks sensors

## D.6.1 Model 5000 sensor to 8712 Transmitter

To connect a Model 5000 sensor to a Rosemount 8712 Transmitter, connect coil drive and electrode cables as shown in Figure D-4.

**⚠ CAUTION**

Do not connect mains or line power to the magnetic flowtube sensor or to the transmitter coil excitation circuit.

**Figure D-4: Wiring Diagram for Brooks Sensor Model 5000 and Rosemount 8712**

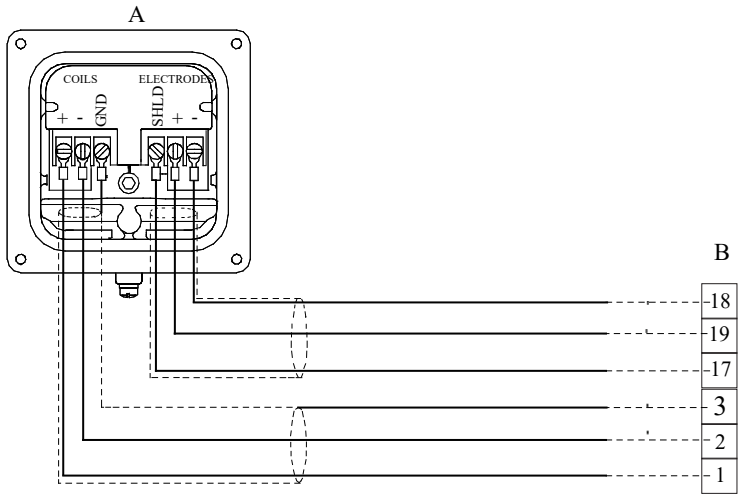


*A. Brooks Model 5000*
*B. Rosemount 8712 transmitter*

**Note**
Refer to Figure D-1 for actual terminal block configuration drawing.

**Table D-4: Brooks Model 5000 Sensor Wiring Connections**

| Rosemount 8712 | Brooks sensors Model 5000 |
|---|---|
| 1 | COILS (+) |
| 2 | COILS (-) |
| 3 | COILS (GND) |
| 17 | ELECTRODES (SHLD) |
| 18 | ELECTRODES (-) |
| 19 | ELECTRODES (+) |

## D.6.2 Model 7400 sensor to 8712 Transmitter

To connect a Model 7400 sensor to a Rosemount 8712 Transmitter, connect coil drive and electrode cables as shown in Figure D-5.

**⚠ CAUTION**

Do not connect mains or line power to the magnetic flowtube sensor or to the transmitter coil excitation circuit.

**Figure D-5: Wiring Diagram for Brooks Sensor Model 7400 and Rosemount 8712**

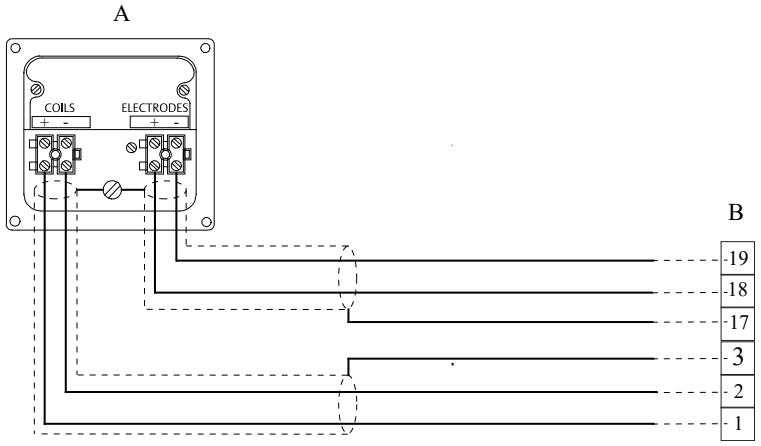


*A. Brooks Model 7400*
*B. Rosemount 8712 transmitter*

**Note**
Refer to Figure D-1 for actual terminal block configuration drawing.

**Table D-5: Brooks Model 7400 sensor Wiring Connections**

| Rosemount 8712 | Brooks Sensors Model 7400 |
|---|---|
| 1 | Coils + |
| 2 | Coils – |
| 3 | 3 |
| 17 | Shield |
| 18 | Electrode + |
| 19 | Electrode – |

# D.7 Endress and Hauser sensors

## D.7.1 Endress and Hauser sensor to 8712 Transmitter

To connect an Endress and Hauser sensor to a Rosemount 8712 Transmitter, connect coil drive and electrode cables as shown in Figure D-6.

**⚠ CAUTION**

Do not connect mains or line power to the magnetic flowtube sensor or to the transmitter coil excitation circuit.

**Figure D-6: Wiring Diagram for Endress and Hauser Sensors and Rosemount 8712**

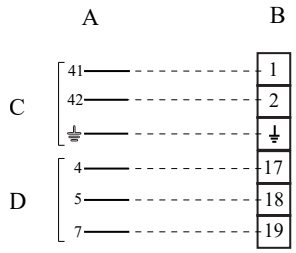


*A. Endress and Hauser sensors*
*B. Rosemount 8712 transmitter*
*C. Coils*
*D. Electrodes*

**Note**
Refer to Figure D-1 for actual terminal block configuration drawing.

**Table D-6: Endress and Hauser Sensor Wiring Connections**

| Rosemount 8712 | Endress and Hauser sensors |
|---|---|
| 1 | 41 |
| 2 | 42 |
| 3 | 14 |
| 17 | 4 |
| 18 | 5 |
| 19 | 7 |

# D.8 Fischer and Porter sensors

## D.8.1 Model 10D1418 sensor to 8712 Transmitter

To connect a Model 10D1418 sensor to a Rosemount 8712 Transmitter, connect coil drive and electrode cables as shown in Figure D-7.

**⚠ CAUTION**

Do not connect mains or line power to the magnetic flowtube sensor or to the transmitter coil excitation circuit.

**Figure D-7: Wiring Diagram for Fischer and Porter Sensor Model 10D1418 and Rosemount 8712**

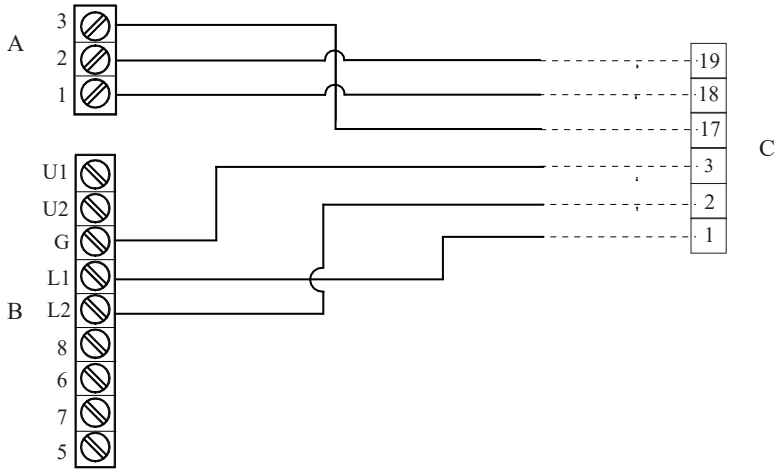


*A. Electrode connections*
*B. Coil connections*
*C. Rosemount 8712 transmitter*

**Note**
Refer to Figure D-1 for actual terminal block configuration drawing.

**Table D-7: Fischer and Porter Model 10D1418 Sensor Wiring Connections**

| Rosemount 8712 | Fischer and Porter Model 10D1418 sensors |
|---|---|
| 1 | L1 |
| 2 | L2 |
| 3 | Chassis ground |
| 17 | 3 |
| 18 | 1 |
| 19 | 2 |

## D.8.2 Model 10D1419 sensor to 8712 Transmitter

To connect a Model 10D1419 sensor to a Rosemount 8712 Transmitter, connect coil drive and electrode cables as shown in Figure D-8.

**⚠ CAUTION**

Do not connect mains or line power to the magnetic flowtube sensor or to the transmitter coil excitation circuit.

**Figure D-8: Wiring Diagram for Fischer and Porter Sensor Model 10D1419 and Rosemount 8712**

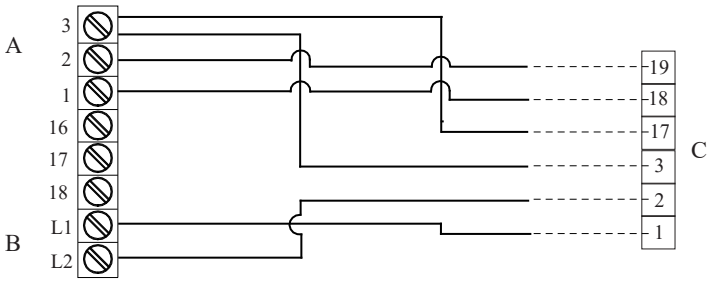


*A. Electrode connections*
*B. Coil connections*
*C. Rosemount 8712 transmitter*

**Note**
Refer to Figure D-1 for actual terminal block configuration drawing.

**Table D-8: Fischer and Porter Model 10D1419 Sensor Wiring Connections**

| Rosemount 8712 | Fischer and Porter Model 10D1419 sensors |
|---|---|
| 1 | L1 |
| 2 | L2 |
| 3 | 3 |
| 17 | 3 |
| 18 | 1 |
| 19 | 2 |

## D.8.3 Model 10D1430 sensor (remote) to 8712 Transmitter

To connect a Model 10D1430 sensor (remote) to a Rosemount 8712 Transmitter, connect coil drive and electrode cables as shown in Figure D-9.

**⚠ CAUTION**

Do not connect mains or line power to the magnetic flowtube sensor or to the transmitter coil excitation circuit.

**Figure D-9: Wiring Diagram for Fischer and Porter Sensor Model 10D1430 (Remote) and Rosemount 8712**

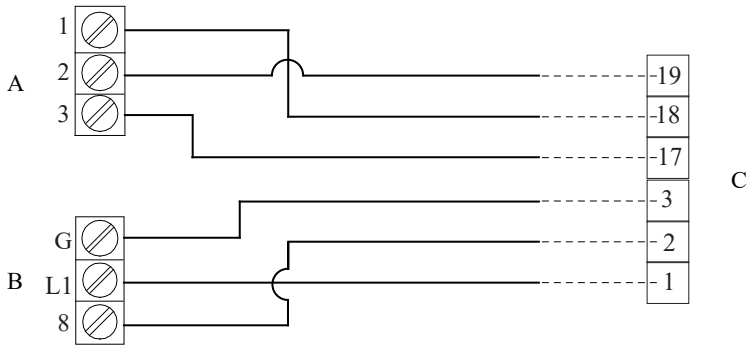


*A. Electrode connections*
*B. Coil connections*
*C. Rosemount 8712 transmitter*

**Note**
Refer to Figure D-1 for actual terminal block configuration drawing.

**Table D-9: Fischer and Porter Model 10D1430 (Remote) Sensor Wiring Connections**

| Rosemount 8712 | Fischer and Porter Model 10D1430 (Remote) sensors |
|---|---|
| 1 | L1 |
| 2 | 8 |
| 3 | G |
| 17 | 3 |
| 18 | 1 |
| 19 | 2 |

## D.8.4 Model 10D1430 sensor (integral) to 8712 Transmitter

To connect a Model 10D1430 sensor (integral) to a Rosemount 8712 Transmitter, connect coil drive and electrode cables as shown in Figure D-10.

**⚠ CAUTION**

Do not connect mains or line power to the magnetic flowtube sensor or to the transmitter coil excitation circuit.

**Figure D-10: Wiring Diagram for Fischer and Porter Sensor Model 10D1430 (Integral) and Rosemount 8712**

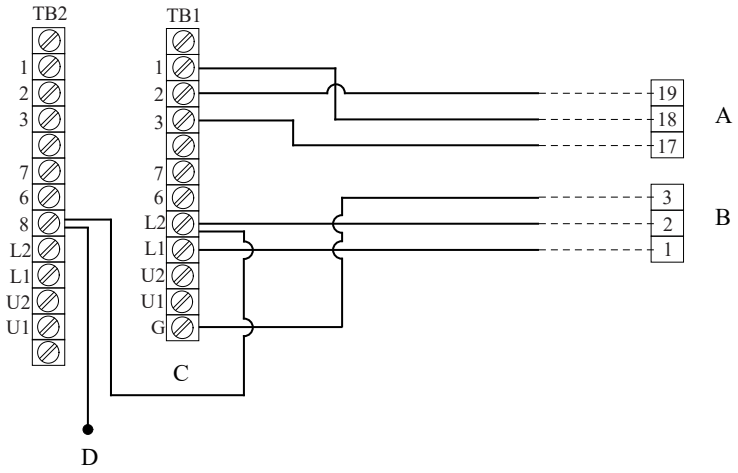


*A. Electrode connections*
*B. Coil connections*
*C. Blue*
*D. To calibration device*

**Note**
Refer to Figure D-1 for actual terminal block configuration drawing.

**Table D-10: Fischer and Porter Model 10D1430 (integral) Sensor Wiring Connections**

| Rosemount 8712 | Fischer and Porter Model 10D1430 (Integral) sensors |
|---|---|
| 1 | L1 |
| 2 | L2 |
| 3 | G |
| 17 | 3 |
| 18 | 1 |
| 19 | 2 |

## D.8.5 Model 10D1465/10D1475 sensors to 8712 Transmitter

To connect a Model 10D1465 or 10D1475 sensor (integral) to a Rosemount 8712 Transmitter, connect coil drive and electrode cables as shown in Figure D-11.

**⚠ CAUTION**

Do not connect mains or line power to the magnetic flowtube sensor or to the transmitter coil excitation circuit.

**Figure D-11: Wiring Diagram for Fischer and Porter Sensor Model 10D1465 and Model 10D1475 (integral) and Rosemount 8712**

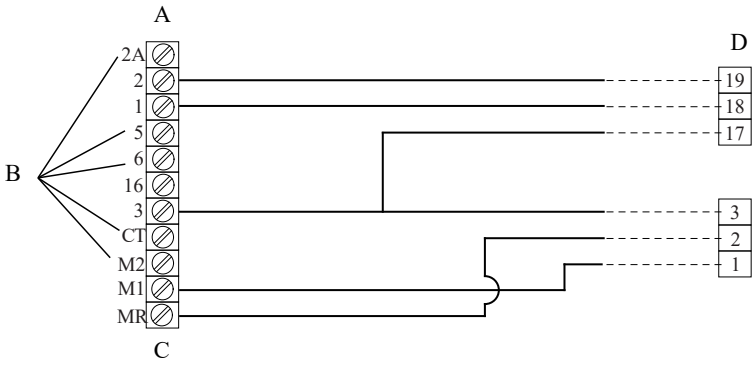


*A. Electrode connections*
*B. Disconnect*
*C. Coil connections*
*D. Rosemount 8712 transmitter*

**Note**
Refer to Figure D-1 for actual terminal block configuration drawing.

**Table D-11: Fischer and Porter Model 10D1465 and 10D1475 Sensor Wiring Connections**

| Rosemount 8712 | Fischer and Porter Model 10D1465 and 10D1475 sensors |
|---|---|
| 1 | M1 |
| 2 | MR |
| 3 | 3 |
| 17 | 3 |
| 18 | 1 |
| 19 | 2 |

## D.8.6 Fischer and Porter sensor to 8712 Transmitter

To connect a Fischer and Porter sensor to a Rosemount 8712 Transmitter, connect coil drive and electrode cables as shown in Figure D-12.

**⚠ CAUTION**

Do not connect mains or line power to the magnetic flowtube sensor or to the transmitter coil excitation circuit.

**Figure D-12: Generic Wiring Diagram for Fischer and Porter Sensors and Rosemount 8712**

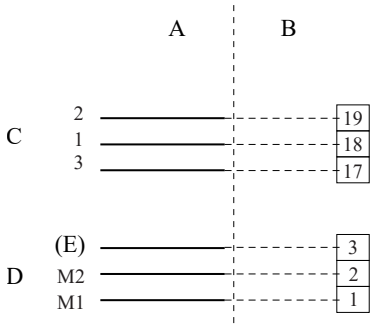


*A. Fischer and Porter sensors*
*B. Rosemount 8712 transmitter*
*C. Electrode connections*
*D. Coil connections*
*E. Chassis*

**Note**
Refer to Figure D-1 for actual terminal block configuration drawing.

**Table D-12: Fischer and Porter Generic Sensor Wiring Connections**

| Rosemount 8712 | Fischer and Porter sensors |
|---|---|
| 1 | M1 |
| 2 | M2 |
| 3 | Chassis ground |
| 17 | 3 |
| 18 | 1 |
| 19 | 2 |

# D.9 Foxboro sensors

## D.9.1 Series 1800 sensor to 8712 Transmitter

To connect a Series 1800 sensor to a Rosemount 8712 Transmitter, connect coil drive and electrode cables as shown in Figure D-13.

**⚠ CAUTION**

Do not connect mains or line power to the magnetic flowtube sensor or to the transmitter coil excitation circuit.

**Figure D-13: Wiring Diagram for Foxboro Series 1800 and Rosemount 8712**

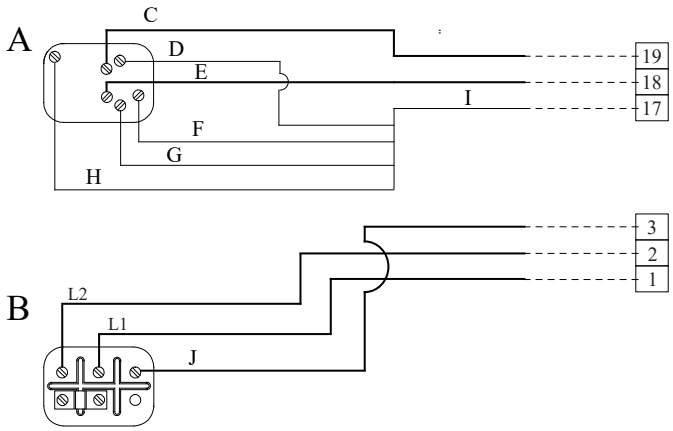


*A. Electrode connections*
*B. Coil connections*
*C. White lead*
*D. White shield*
*E. Black lead*
*F. Inner shield*
*G. Black shield*
*H. Outer shield*
*I. Any shield*
*J. Chassis ground*

**Note**
Refer to Figure D-1 for actual terminal block configuration drawing.

**Table D-13: Foxboro Series1800 Sensor Wiring Connections**

| Rosemount 8712 | Foxboro Series 1800 sensors |
|---|---|
| 1 | L1 |
| 2 | L2 |
| 3 | Chassis ground |
| 17 | Any shield |
| 18 | Black |
| 19 | White |

## D.9.2 Series 1800 (version 2) sensor to 8712 Transmitter

To connect a Series 1800 (version 2) sensor to a Rosemount 8712 Transmitter, connect coil drive and electrode cables as shown in Figure D-14.

**⚠ CAUTION**

Do not connect mains or line power to the magnetic flowtube sensor or to the transmitter coil excitation circuit.

**Figure D-14: Wiring Diagram for Foxboro Series 1800 (Version 2) and Rosemount 8712**

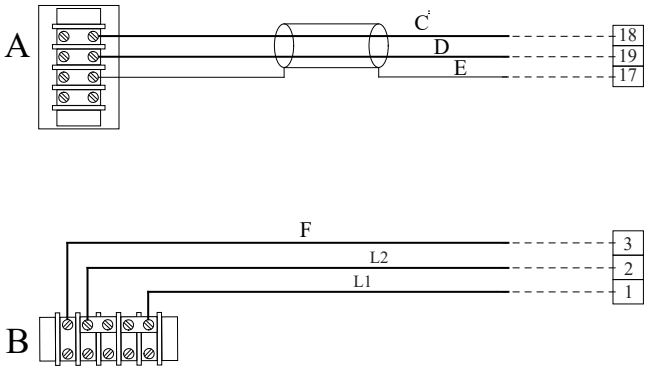


*A. Electrode connections*
*B. Coil connections*
*C. Blcak lead*
*D. White lead*
*E. Shield*
*F. Chassis ground*

**Note**
Refer to Figure D-1 for actual terminal block configuration drawing.

**Table D-14: Foxboro Series 1800 (Version 2) Sensor Wiring Connections**

| Rosemount 8712 | Foxboro Series 1800 sensors |
|---|---|
| 1 | L1 |
| 2 | L2 |
| 3 | Chassis Ground |
| 17 | Any Shield |
| 18 | Black |
| 19 | White |

## D.9.3 Series 2800 Sensor to 8712 Transmitter

To connect a Series 2800 Sensor to a Rosemount 8712 Transmitter, connect coil drive and electrode cables as shown in Figure D-15.

**⚠ CAUTION**

Do not connect mains or line power to the magnetic flowtube sensor or to the transmitter coil excitation circuit.

**Figure D-15: Wiring Diagram for Foxboro Series 2800 and Rosemount 8712**

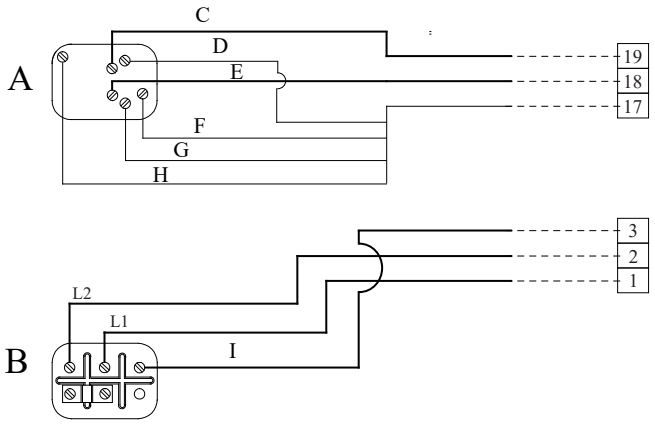


*A. Electrode connections*
*B. Coil connections*
*C. White lead*
*D. Black lead*
*E. Inner shield*
*F. Black shield*
*G. Outer shield*
*H. Chassis ground*

**Note**
Refer to Figure D-1 for actual terminal block configuration drawing.

**Table D-15: Foxboro Series 2800 Sensor Wiring Connections**

| Rosemount 8712 | Foxboro Series 2800 Sensors |
|---|---|
| 1 | L1 |
| 2 | L2 |
| 3 | Chassis Ground |
| 17 | Any Shield |
| 18 | Black |
| 19 | White |

## D.9.4 Foxboro Sensor to 8712 Transmitter

To connect a Foxboro Sensor to a Rosemount 8712 Transmitter, connect coil drive and electrode cables as shown in Figure D-16.

**⚠ CAUTION**

Do not connect mains or line power to the magnetic flowtube sensor or to the transmitter coil excitation circuit.

**Figure D-16: Generic Wiring Diagram for Foxboro Sensors and Rosemount 8712**

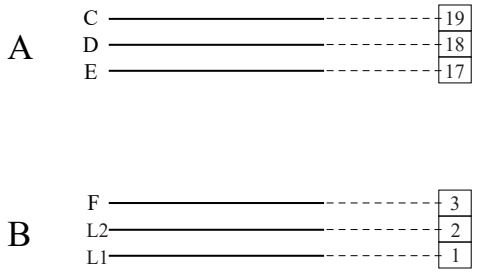


*A. Electrode connections*
*B. Coil connections*
*C. White*
*D. Black*
*E. Any shield*
*F. Chassis ground*

**Note**
Refer to Figure D-1 for actual terminal block configuration drawing.

**Table D-16: Foxboro Generic Sensor Wiring Connections**

| Rosemount 8712 | Foxboro sensors |
|---|---|
| 1 | L1 |
| 2 | L2 |
| 3 | Chassis Ground |
| 17 | Any Shield |
| 18 | Black |
| 19 | White |

# D.10 Kent Veriflux VTC sensor

## D.10.1 Veriflux VTC sensor to 8712 Transmitter

To connect a Veriflux VTC sensor to a Rosemount 8712 Transmitter, connect coil drive and electrode cables as shown in Figure D-17.

**⚠ CAUTION**

Do not connect mains or line power to the magnetic flowtube sensor or to the transmitter coil excitation circuit.

**Figure D-17: Wiring Diagram for Kent Veriflux VTC Sensor and Rosemount 8712**

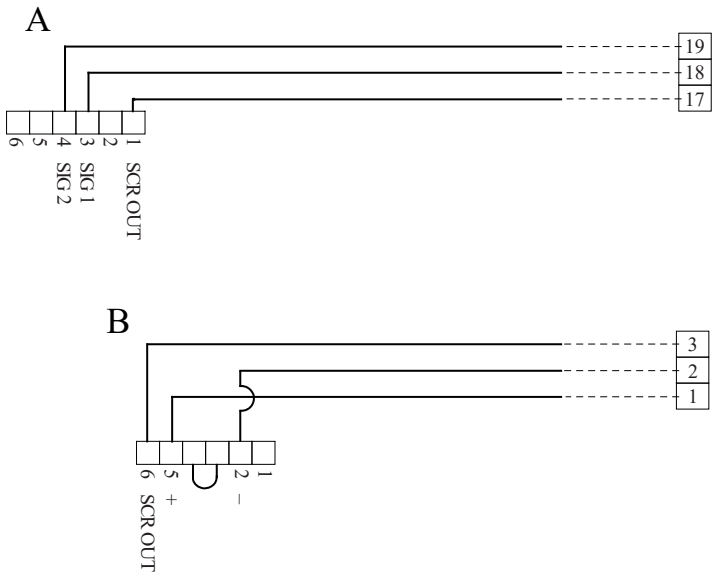


*A. Electrode connections*
*B. Coil connections*

**Note**
Refer to Figure D-1 for actual terminal block configuration drawing.

**Table D-17: Kent Veriflux VTC Sensor Wiring Connections**

| Rosemount 8712 | Kent Veriflux VTC sensors |
|---|---|
| 1 | 2 |
| 2 | 1 |
| 3 | SCR OUT |
| 17 | SCR OUT |
| 18 | SIG1 |
| 19 | SIG2 |

# D.11 Kent sensors

## D.11.1 Kent sensor to 8712 Transmitter

To connect a Kent sensor to a Rosemount 8712 Transmitter, connect coil drive and electrode cables as shown in Figure D-18.

**⚠ CAUTION**

Do not connect mains or line power to the magnetic flowtube sensor or to the transmitter coil excitation circuit.

**Figure D-18: Generic Wiring Diagram for Kent Sensors and Rosemount 8712**

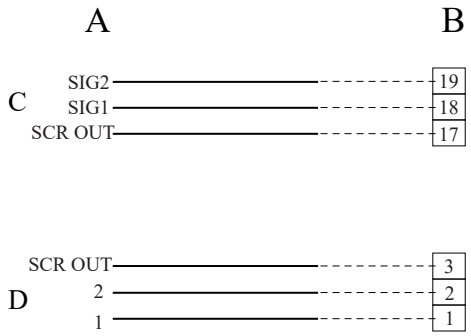


*A. Kent sensors*
*B. Rosemount 8712 transmitter*
*C. Electrode connections*
*D. Coil connections*

**Note**
Refer to Figure D-1 for actual terminal block configuration drawing.

**Table D-18: Kent Sensor Wiring Connections**

| Rosemount 8712 | Kent sensors |
|---|---|
| 1 | 1 |
| 2 | 2 |
| 3 | SCR OUT |
| 17 | SCR OUT |
| 18 | SIG1 |
| 19 | SIG2 |

# D.12 Krohne sensors

## D.12.1 Krohne sensor to 8712 Transmitter

To connect a Krohne sensor to a Rosemount 8712 Transmitter, connect coil drive and electrode cables as shown in Figure D-19.

**⚠ CAUTION**

Do not connect mains or line power to the magnetic flowtube sensor or to the transmitter coil excitation circuit.

**Figure D-19: Generic Wiring Diagram for Krohne Sensors and Rosemount 8712**

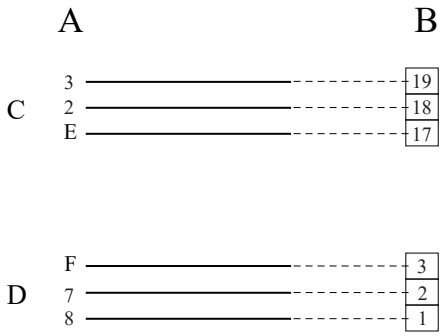


*A. Kent sensors*
*B. Rosemount 8712 transmitter*
*C. Electrode connections*
*D. Coil connections*
*E. Electrode shield*
*F. Coil shield*

**Note**
Refer to Figure D-1 for actual terminal block configuration drawing.

**Table D-19: Krohne Sensor Wiring Connections**

| Rosemount 8712 | Krohne sensors |
|---|---|
| 1 | 8 |
| 2 | 7 |
| 3 | Coil Shield |
| 17 | Electrode Shield |
| 18 | 2 |
| 19 | 3 |

# D.13 Taylor sensors

## D.13.1 Series 1100 sensor to 8712 Transmitter

To connect a Series 1100 sensor to a Rosemount 8712 Transmitter, connect coil drive and electrode cables as shown in Figure D-20.

**⚠ CAUTION**

Do not connect mains or line power to the magnetic flowtube sensor or to the transmitter coil excitation circuit.

**Figure D-20: Wiring Diagram for Taylor Series 1100 Sensors and Rosemount 8712**

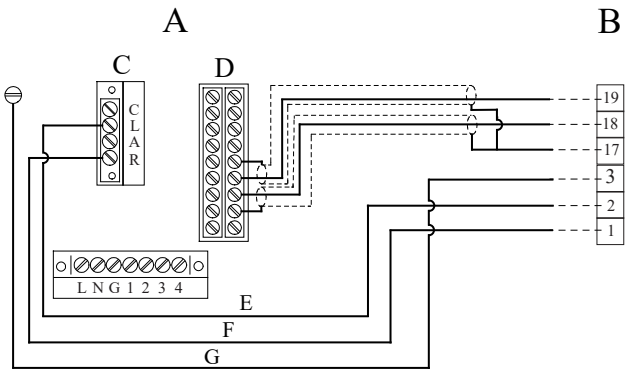


*A. Taylor Series 1100 sensor*
*B. Rosemount 8712 transmitter*
*C. Coil connections*
*D. Electrode connections*
*E. White*
*F. Black*
*G. Green*

**Note**
Refer to Figure D-1 for actual terminal block configuration drawing.

**Table D-20: Taylor Series 1100 Sensor Wiring Connections**

| Rosemount 8712 | Taylor Series 1100 sensors |
|---|---|
| 1 | Black |
| 2 | White |
| 3 | Green |
| 17 | S1 and S2 |
| 18 | E1 |
| 19 | E2 |

## D.13.2 Taylor sensor to 8712 Transmitter

To connect a Taylor sensor to a Rosemount 8712 Transmitter, connect coil drive and electrode cables as shown in Figure D-21.

**⚠ CAUTION**

Do not connect mains or line power to the magnetic flowtube sensor or to the transmitter coil excitation circuit.

**Figure D-21: Generic Wiring Diagram for Taylor Sensors and Rosemount 8712**

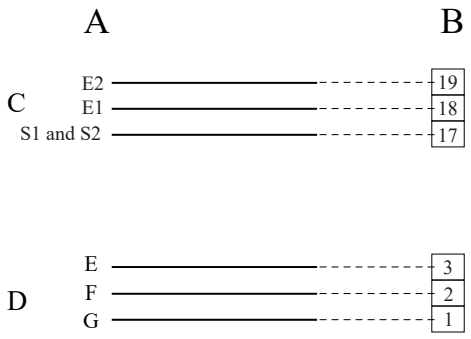


*A. Taylor sensor*
*B. Rosemount 8712 transmitter*
*C. Electrode connections*
*D. Coil connections*
*E. Green*
*F. White*
*G. Black*

**Note**
Refer to Figure D-1 for actual terminal block configuration drawing.

**Table D-21: Taylor Sensor Wiring Connections**

| Rosemount 8712 | Taylor sensors |
|---|---|
| 1 | Black |
| 2 | White |
| 3 | Green |
| 17 | S1 and S2 |
| 18 | E1 |
| 19 | E2 |

# D.14 Yamatake Honeywell sensors

## D.14.1 Yamatake Honeywell sensor to 8712 Transmitter

To connect a Yamatake Honeywell sensor to a Rosemount 8712 Transmitter, connect coil drive and electrode cables as shown in Figure D-22.

**⚠ CAUTION**

Do not connect mains or line power to the magnetic flowtube sensor or to the transmitter coil excitation circuit.

**Figure D-22: Generic Wiring Diagram for Yamatake Honeywell Sensors and Rosemount 8712**

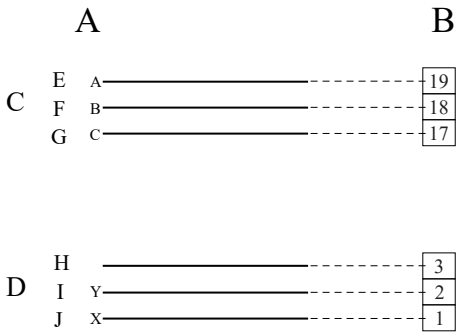


*A. Yamatake Honeywell sensors*
*B. Rosemount 8712 transmitter*
*C. Electrode connections*
*D. Coil connections*
*E. Terminal A*
*F. Terminal B*
*G. Terminal C*
*H. Chassis ground*
*I. Terminal Y*
*J. Terminal X*

**Note**
Refer to Figure D-1 for actual terminal block configuration drawing.

**Table D-22: Yamatake Honeywell Sensor Wiring Connections**

| Rosemount 8712 | Yamatake Honeywell sensors |
|---|---|
| 1 | X |
| 2 | Y |
| 3 | Chassis Ground |
| 17 | C |
| 18 | B |
| 19 | A |

# D.15 Yokogawa sensors

## D.15.1 Yokogawa sensor to 8712 Transmitter

To connect a Yokogawa sensor to a Rosemount 8712 Transmitter, connect coil drive and electrode cables as shown in Figure D-23.

**⚠ CAUTION**

Do not connect mains or line power to the magnetic flowtube sensor or to the transmitter coil excitation circuit.

**Figure D-23: Generic Wiring Diagram for Yokogawa Sensors and Rosemount 8712**

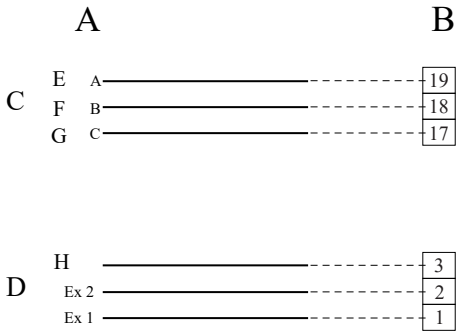


*A. Yokogawa sensors*
*B. Rosemount 8712 transmitter*
*C. Electrode connections*
*D. Terminal A*
*E. Terminal B*
*F. Terminal C*
*G. Chassis ground*

**Note**
Refer to Figure D-1 for actual terminal block configuration drawing.

**Table D-23: Yokogawa Sensor Wiring Connections**

| Rosemount 8712 | Yokogawa sensors |
|---|---|
| 1 | EX1 |
| 2 | EX2 |
| 3 | Chassis Ground |
| 17 | C |
| 18 | B |
| 19 | A |

# D.16 Generic manufacturer sensor to 8712 Transmitter

## D.16.1 Identify the terminals

### Prerequisites

First check the sensor manufacturer's manual to identify the appropriate terminals. Otherwise, perform the following procedure.

### Identify coil and electrode terminals

**Procedure**

1. Select a terminal and touch an ohmmeter probe to it.
2. Touch the second probe to each of the other terminals and record the results for each terminal.
3. Repeat the process and record the results for every terminal.

Coil terminals will have a resistance of approximately 3-300 ohms.

Electrode terminals will have an open circuit.

### Identify a chassis ground

**Procedure**

1. Touch one probe of an ohmmeter to the sensor chassis.
2. Touch the other probe to the each sensor terminal and the record the results for each terminal.

The chassis ground will have a resistance value of one ohm or less.

## D.16.2 Wiring connections

**Procedure**

**⚠ CAUTION**

Do not connect mains or line power to the magnetic flowtube sensor or to the transmitter coil excitation circuit.

1. Connect the electrode terminals to Rosemount 8712 terminals 18 and 19. The electrode shield should be connected to terminal 17.
2. Connect the coil terminals to Rosemount 8712 terminals 1, 2, and 3.
3. If the Rosemount 8712 Transmitter indicates a reverse flow condition, switch the coil wires connected to terminals 1 and 2.

00809-0100-4445
Rev. AB
2024

For more information: **Emerson.com/global**

©2024 Emerson. All rights reserved.

Emerson Terms and Conditions of Sale are available upon request. The Emerson logo is a trademark and service mark of Emerson Electric Co. Rosemount is a mark of one of the Emerson family of companies. All other marks are the property of their respective owners.

ROSEMOUNT™

EMERSON™