Reference Manual
00809-0200-4728, Rev SF
January 2023

Rosemount™ 644 Temperature Transmitter

with HART® Protocol



ROSEMOUNT™

EMERSON™

Safety messages

NOTICE

Read this document before working with the product. For personal and system safety, and for optimum product performance, ensure you thoroughly understand the contents before installing, using, or maintaining this product. For technical assistance, contacts are listed below:

Customer Central

Technical support, quoting, and order-related questions.
United States - 1-800-999-9307 (7:00 am to 7:00 pm Central Time)
Asia Pacific- 65 777 8211
Europe/Middle East/Africa - 49 (8153) 9390

North American Response Center

Equipment service needs.
1-800-654-7768 (24 hours—includes Canada)
Outside of these areas, contact your local Emerson representative.

⚠ WARNING

Follow instruction

Failure to follow these installation guidelines could result in death or serious injury.

Ensure only qualified personnel perform the installation.

Explosion

Explosions could result in death or serious injury.

Do not remove the connection head cover in explosive atmospheres when the circuit is live.
Before connecting a handheld communicator in an explosive atmosphere, ensure that the instruments in the loop are installed in accordance with intrinsically safe or non-incendive field wiring practices.
Verify that the operating atmosphere of the transmitter is consistent with the appropriate hazardous locations certifications.
All connection head covers must be fully engaged to meet explosion-proof requirements.

Process leaks

Process leaks could result in death or serious injury.

Do not remove the thermowell while in operation.
Install and tighten thermowells and sensors before applying pressure.

Electric shock

Electrical shock could cause death or serious injury.

Use extreme caution when making contact with the leads and terminals.

The products described in this document are NOT designed for nuclear-qualified applications.

Using non-nuclear qualified products in applications that require nuclear-qualified hardware or products may cause inaccurate readings.

For information on Rosemount nuclear-qualified products, contact your local Emerson Sales Representative.

⚠ WARNING

Physical access

Unauthorized personnel may potentially cause significant damage to and/or misconfiguration of end users' equipment. This could be intentional or unintentional and needs to be protected against.

Physical security is an important part of any security program and fundamental to protecting your system. Restrict physical access by unauthorized personnel to protect end users' assets. This is true for all systems used within the facility.

Contents

Chapter 1 Introduction 7
1.1 Using this manual 7

Chapter 2 Configuration 11
2.1 Overview 11
2.2 Safety messages 11
2.3 System readiness 12
2.4 Configuration methods 13
2.5 Verify configuration 18
2.6 Basic configuration of the transmitter 21
2.7 Configure dual sensor options 27
2.8 Configure device outputs 34
2.9 Inputting device information 40
2.10 Configure measurement filtering 42
2.11 Diagnostics and service 45
2.12 Establishing multi-drop communication 49
2.13 Using the transmitter with the HART Tri-Loop 51
2.14 Transmitter security 54

Chapter 3 Hardware Installation 57
3.1 Overview 57
3.2 Safety messages 57
3.3 Considerations 58
3.4 Installation procedures 61

Chapter 4 Electrical Installation 73
4.1 Overview 73
4.2 Safety messages 73
4.3 Wiring and powering the transmitter 74

Chapter 5 Operation and Maintenance 85
5.1 Overview 85
5.2 Safety messages 85
5.3 Calibration overview 87
5.4 Sensor input trim 88
5.5 Trim the analog output 91
5.6 Transmitter-sensor matching 93
5.7 Switching HART Revision 96

Chapter 6 Troubleshooting 99
6.1 Overview 99

6.2 Safety messages 99
6.3 4–20 mA/HART output 101
6.4 Diagnostic messages 103
6.5 Return of materials 108

Chapter 7 Safety Instrumented Systems (SIS) Certification 109
7.1 SIS certification 109
7.2 Safety certified identification 109
7.3 Installation 109
7.4 Configuration 110
7.5 Operation and maintenance 111
7.6 Specifications 113

Appendix A Reference Data 115
A.1 Product certifications 115
A.2 Ordering information, specifications, and drawings 115
A.3 AMS terms 116

Appendix B Field Communicator Menu Trees and Fast Keys 117
B.1 Field Communicator menu trees 117
B.2 Field Communicator Fast Keys 123

Appendix C Local Operator Interface (LOI) 127
C.1 Number entry 128
C.2 Text entry 129
C.3 Timeout 131
C.4 Saving and canceling 131
C.5 LOI menu tree 133
C.6 LOI menu tree – extended menu 134

1 Introduction

1.1 Using this manual

This manual is designed to assist in the installation, operation, and maintenance of Rosemount 644 Head Mount, Field Mount, and Rail Mount Transmitters with the HART® protocol.

Configuration provides instruction the commissioning and operating the Rosemount 644 HART Transmitter. The information explains how to configure software functions and many configuration parameters on an Asset Management System, a Field Communicator, and the Local Operator Interface display option.

Hardware Installation contains mechanical installation instructions for the transmitter.

Electrical Installation contains electrical installation instructions and considerations for the transmitter.

Operation and Maintenance contains common operation and maintenance techniques for the transmitter.

Troubleshooting provides troubleshooting techniques for the most common transmitter operating problems.

Safety Instrumented Systems (SIS) Certification provides identification, installation, configuration, operation and maintenance, and inspection information for Safety Instrumented Systems as it pertains to the Rosemount 644 Head Mount and Field Mount Temperature Transmitter.

Reference Data supplies procedure on how to get the specifications, ordering information, and product certification.

Field Communicator Menu Trees and Fast Keys contains Field Communicator menu trees and Field Communicator Fast Keys.

Local Operator Interface (LOI) contains instructions for number entry, text entry, as well as the LOI menu tree and LOI extended menu tree.

1.1.1 Transmitter overview

The Rosemount 644 Head Mount and Field Mount Temperature Transmitters support the following features:

- HART® configuration with Selectable HART revision capability (Revisions 5 or 7)
- Accepts either one or two inputs from a wide variety of sensor types (2-, 3-, and 4-wire RTD, thermocouple, mV and ohm)
- A compact transmitter size with electronics completely encapsulated in protective silicone and enclosed in a plastic housing ensuring long-term transmitter reliability
- Optional Safety Certification Option (IEC 61508 SIL 2)

- Optional enhanced accuracy and stability performance
- Optional LCD display with extended temperature ratings of -40 to 185 °F (-40 to 85 °C)
- Optional advanced LCD display with local operator interface (LOI)
- The Rosemount 644 Head Mount Transmitter is available in two housing materials (Aluminum and SST) and various housing options that allow for mounting flexibility in a variety of environmental conditions. The Rosemount 644 Field Mount is available in an aluminum housing.
- Special dual-sensor features include Hot Backup™, Sensor Drift Alert, first good, differential and average temperature measurements, and four simultaneous measurement variable outputs in addition to the analog output signal.
- Additional advanced features include: Thermocouple degradation diagnostic, which monitors thermocouple health, and process and transmitter minimum/maximum temperature tracking.

The Rosemount 644 Rail Mount Temperature Transmitter supports the following features:

- 4–20 mA/HART protocol (Revision 5)
- Accepts one sensor input from a wide variety of sensor types (2-, 3-, and 4-wire RTD, Thermocouple, mV and ohm)
- Completely encapsulated electronics to ensure long term transmitter reliability

Refer to the following literature for a full range of compatible connection heads, sensors, and thermowells provided by Emerson.

- Rosemount Volume 1 Temperature Sensors and Accessories (English) Product Data Sheet
- Rosemount DIN-Style Temperature Sensors and Thermowells (Metric) Product Data Sheet

Table 1-1 and Table 1-2 below summarize changes in the Rosemount 644 Head Mount and Rail Mount HART device revisions, respectively.

Table 1-1: Head Mount HART Revisions

Software release date	Identify device			Field device driver		Review instructions
	NAMUR software revision	NAMUR hardware revision(1)	HART software revision	HART universal revision(2)	Device revision	Manual document number
Jan-2023	1.1.3	1.0.2	5	7	9	00809-0200-4728
				5	8	
Feb-2020	1.1.2	1.0.1	4	7	9	00809-0200-4728
				5	8	

Table 1-1: Head Mount HART Revisions *(continued)*

Software release date	Identify device			Field device driver		Review instructions
	NAMUR software revision	NAMUR hardware revision(1)	HART software revision	HART universal revision(2)	Device revision	Manual document number
Aug-2012	1.1.1	1.0.0	3	7	9	00809-0200-4728

(1) NAMUR Software Revision is located in the hardware tag of the device. HART Software Revision can be read using a HART-capable configuration tool.

(2) Device Driver file names use Device and DD Revision (e.g. 10_07). HART Protocol is designed to enable legacy driver revisions to continue to communicate with new HART devices. To access this functionality, the new device driver must be downloaded. It is recommended to download the new device driver to ensure new functionality.

Table 1-2: Rail Mount HART Revisions

	Railmount
Rosemount 644 Hardware revision	31
Device revision	7
HART revision	5

2 Configuration

2.1 Overview

This section contains information on commissioning and tasks that should be performed on the bench prior to installation. Field Communicator, AMS Device Manager, and Local Operator Interface (LOI) instructions are given to perform configuration functions. For convenience, Field Communicator Fast Key sequences are labeled “Fast Keys,” and abbreviated LOI menus are provided for each function below. The LOI is only available on the Rosemount 644 Head Mount and Field Mount designs, and the configuration instructions referencing the interface will not apply to the rail mount form factor.

Full Field Communicator menu trees and Fast Key sequences are available in Field Communicator Menu Trees and Fast Keys. Local operator interface menu trees are available in Local Operator Interface (LOI).

2.2 Safety messages

Instructions and procedures in this section may require special precautions to ensure the safety of the personnel performing the operations. Refer to the following safety messages before performing an operation preceded by this symbol.

⚠ WARNING

Follow instruction

Failure to follow these installation guidelines could result in death or serious injury.

Ensure only qualified personnel perform the installation.

Explosion

Explosions could result in death or serious injury.

Do not remove the connection head cover in explosive atmospheres when the circuit is live.

Before connecting a handheld communicator in an explosive atmosphere, ensure that the instruments in the loop are installed in accordance with intrinsically safe or non-incendive field wiring practices.

Verify that the operating atmosphere of the transmitter is consistent with the appropriate hazardous locations certifications.

All connection head covers must be fully engaged to meet explosion-proof requirements.

⚠ WARNING

Process leaks

Process leaks could result in death or serious injury.

Do not remove the thermowell while in operation.
Install and tighten thermowells and sensors before applying pressure.

Electric shock

Electrical shock could cause death or serious injury.

Use extreme caution when making contact with the leads and terminals.

Physical access

Unauthorized personnel may potentially cause significant damage to and/or misconfiguration of end users' equipment. This could be intentional or unintentional and needs to be protected against.

Physical security is an important part of any security program and fundamental to protecting your system. Restrict physical access by unauthorized personnel to protect end users' assets. This is true for all systems used within the facility.

2.3 System readiness

2.3.1 Confirm HART revision capability

If using HART®-based control or asset management systems, confirm the HART capability of those systems prior to transmitter installation. Not all systems are capable of communicating with HART Revision 7 protocol. This transmitter can be configured for either HART Revision 5 or 7.

For instructions on how to change the HART revision of your transmitter, see Switching HART Revision.

2.3.2 Confirm correct device driver

- Verify the latest Device Driver files are loaded on your systems to ensure proper communications.
- Download the latest Device Driver at Emerson.com/Rosemount or Fieldcomm.org.

Table 2-1: Rosemount 644 Device Revisions and Files

Software date	Identify device		Find device driver files		Review instructions	Review functionality
Date	NAMUR software revision	HART® software revision	HART Universal revision(1)	Device revision(2)	Document	Changes to software(3)
June 2012	1.1.1	01	5	8	Rosemount 644 Temperature Transmitter Reference Manual	See (3) for list of changes
			7	9		

(1) NAMUR Software Revision is located on the hardware tag of the device. HART Software Revision can be read using a HART Communication tool.

(2) Device Driver file names use Device and DD Revision (e.g. 10_01). HART Protocol is designed to enable legacy device driver revisions to continue to communicate with new HART devices. To access new functionality, the new Device Driver must be downloaded. It is recommended to download the new Device Driver files to ensure full functionality.

(3) HART Revision 5 and 7 Selectable. Dual Sensor support, Safety Certified, Advanced Diagnostics (if ordered), Enhanced Accuracy, and Stability (if ordered).

2.3.3 Surges/transients

The transmitter will withstand electrical transients of the energy level encountered in static discharges or induced switching transients. However, high-energy transients, such as those induced in wiring from nearby lightning strikes, welding, heavy electrical equipment, or switching gears, can damage both the transmitter and the sensor. To protect against high-energy transients, install the transmitter into a suitable connection head with the integral transient protector, option T1. Refer to the Rosemount 644 Product Data Sheet for more information.

2.4 Configuration methods

⚠ CAUTION

Commisioning

Set all transmitter hardware adjustments during commissioning to avoid exposing the transmitter electronics to the plant environment after installation.

The transmitter can be configured either before or after installation. Configuring the transmitter on the bench using either a Field Communicator, AMS Device

Manager, or LOI ensures all transmitter components are in working order prior to installation.

The transmitter can be configured either on-line or off-line using a Field Communicator, AMS Device Manager, or the optional LOI (head-mount and field-mount). During on-line configuration, the transmitter is connected to a Field communicator. Data is entered in the working register of the communicator and sent directly to the transmitter.

Off-line configuration consists of storing configuration data in a Field Communicator while it is not connected to a transmitter. Data is stored in nonvolatile memory and can be downloaded to the transmitter at a later time.

2.4.1 Configuring on the bench

To configure on the bench, required equipment includes a power supply, a digital multimeter (DMM), and Field Communicator, AMS Device Manager, or a LOI – option M4.

Connect the equipment as shown in Figure 2-1. Connect HART® Communication leads at any termination point in the signal loop. To ensure successful HART Communication, a resistance of at least 250 ohms must be present between the transmitter and the power supply. Connect the Field Communicator leads to the clips behind the power (+,–) terminals on the top of the device. Avoid exposing the transmitter electronics to the plant environment after installation by setting all transmitter jumpers during the commissioning stage on the bench.

Figure 2-1: Powering the Transmitter for Bench Configuration

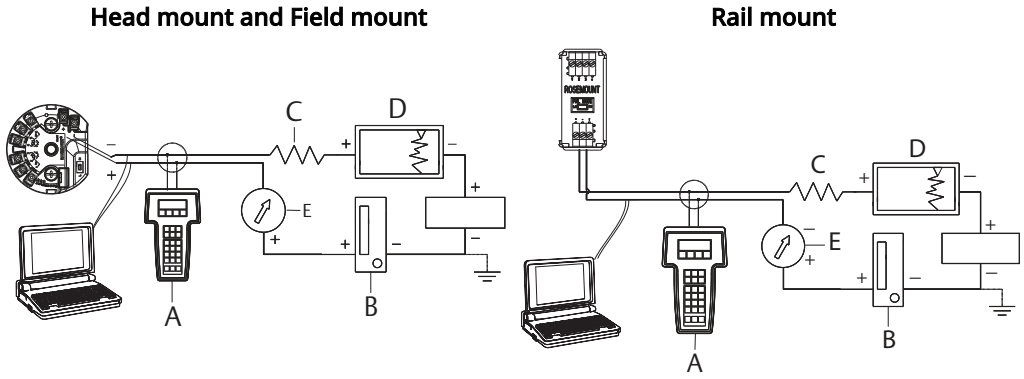

A. Field communicator
B. Power supply
C. 248 Ω ≤ RL ≤ 1100 Ω
D. Recorder (optional)
E. Ammeter (optional)

Note

- Signal loop may be grounded at any point or left ungrounded.

- A Field Communicator may be connected at any termination point in the signal loop. The signal loop must have between 250 and 1100 ohms load for communications.
- Max torque is 6 in-lb (0.7 N-m).

2.4.2 Selecting a configuration tool

Field Communicator

The Field Communicator is a handheld device that exchanges information with the transmitter from the control room, the instrument site, or any wiring termination point in the loop. To facilitate communication, connect the Field Communicator, shown in this manual, in parallel with the transmitter (see Figure 2-1). Use the loop connection ports on the rear panel of the Field Communicator. The connections are non-polarized. Do not make connections to the serial port or the nickel cadmium (NiCd) recharger jack in explosive atmospheres. Before connecting the Field Communicator in an explosive atmosphere make sure the instruments in the loop are installed in accordance with intrinsically safe or non-incendive field wiring practices.

There are two interfaces available with the Field Communicator: Traditional and Dashboard interfaces. All steps using a Field Communicator will be using Dashboard interfaces. Figure 2-2 shows the Device Dashboard interface. As stated in System readiness, it is critical that the latest DD's are loaded into the Field Communicator for optimal transmitter performance.

Visit Emerson.com/Rosemount to download latest DD library.

Turn on the Field Communicator by pressing the ON/OFF key. The Field Communicator will search for a HART®-compatible device and indicate when the connection is made. If the Field Communicator fails to connect, it indicates that no device was found. If this occurs, refer to Troubleshooting.

Figure 2-2: Field Communicator Device Dashboard Interface

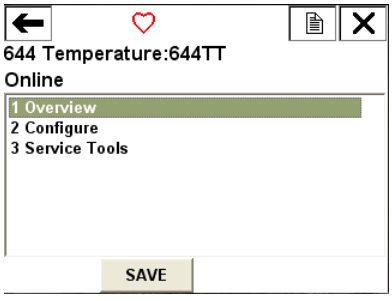

Field Communicator menu trees and Fast Keys are available in Field Communicator Menu Trees and Fast Keys.

AMS Device Manager

With an AMS Device Manager software package, you can commission and configure instruments, monitor status and alerts, troubleshoot from the control room, perform advanced diagnostics, manage calibration, and automatically document activities with a single application.

Full configuration capability with AMS Device Manager requires loading the most current Device Descriptor (DD) for this device. Download the latest DD at Emerson.com/Rosemount or Fieldcomm.org.

Note
All steps listed in this product manual using AMS Device Manager assume the use of Version 11.5.

Local Operator Interface (LOI)

- The LOI requires option code M4 to be ordered.
- To activate the LOI, push either configuration button. Configuration buttons are located on the LCD display (remove the housing cover to access the interface. See Table 2-2 for configuration button functionality and Figure 2-3 for configuration button location).

When using the LOI for configuration, several features require multiple screens for a successful configuration. Data entered will be saved on a screen-by-screen basis; the LOI will indicate this by flashing SAVED on the LCD display each time.

Note
Entering into the LOI menu effectively disables the ability to write to the device by any other host or configuration tool. Ensure this is communicated to necessary personnel before using the LOI for device configuration.

Figure 2-3: LOI Configuration Buttons

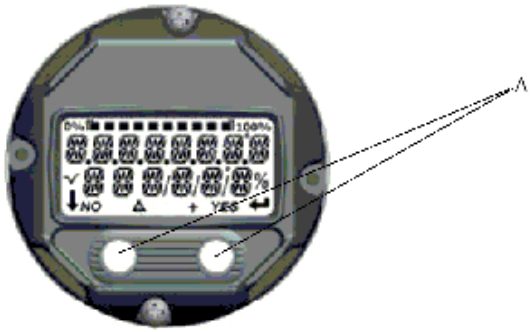

A. Configuration buttons

Table 2-2: LOI Button Operation

Button	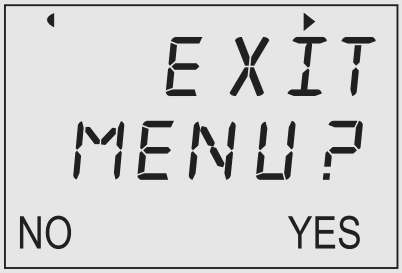	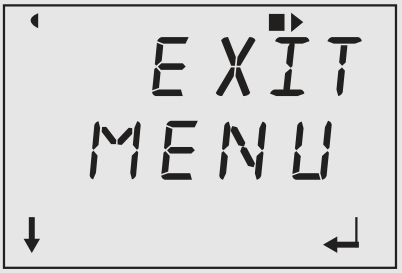
Left	No	SCROLL
Right	Yes	ENTER

LOI password

An LOI password can be entered and enabled to prevent review and modification of device configuration via the LOI. This does not prevent configuration from HART® or through the control system. The LOI password is a four-digit code that is to be set by the user. If the password is lost or forgotten the master password is “9307”. The LOI password can be configured and enabled/disabled by HART communication via a Field Communicator, AMS Device Manager, or the LOI.

2.4.3 Setting the loop to manual

When sending or requesting data that would disrupt the loop or change the output of the transmitter, set the process application loop to manual. The Field Communicator, AMS Device Manager, or LOI will prompt you to set the loop to manual when necessary. Acknowledging this prompt does not set the loop to manual. The prompt is only a reminder; set the loop to manual as a separate operation.

2.4.4 Failure mode

As part of normal operation, each transmitter continuously monitors its own performance. This automatic diagnostics routine is a timed series of checks repeated continuously. If diagnostics detect an input sensor failure or a failure in the transmitter electronics, the transmitter drives its output to low or high depending on the position of the failure mode switch. If the sensor temperature is outside the range limits, the transmitter saturates its output to 3.9 mA for standard configuration on the low end (3.8 mA if configured for NAMUR-compliant operation) and 20.5 mA on the high end (or NAMUR-compliant). These values are also custom configurable by the factory or using the Field Communicator. The values to which the transmitter drives its output in failure mode depend on whether it is configured to standard, NAMUR-compliant, or custom operation. See Rosemount 644 Temperature Transmitter Product Data Sheet for standard and NAMUR-compliant operation parameters.

2.4.5 HART software lock

The HART® software lock prevents changes to the transmitter configuration from all sources; all changes requested via HART by the Field Communicator, AMS Device manager or the LOI will be rejected. The HART Lock can only be set via HART Communication, and is only available in HART Revision 7 mode. The HART Lock can be enabled or disabled with a Field Communicator or AMS Device Manager.

Lock HART software using the Field Communicator

From the ***HOME*** screen, enter the Fast Key sequence.

Device Dashboard Fast Keys	3, 2, 1

Lock HART software using the AMS Device Manager

Procedure

1. Right click on the device and select **Configure**.
2. Under Manual Setup select the **Security** tab.
3. Select the **Lock/Unlock** button under HART Lock (Software) and follow the screen prompts.

2.5 Verify configuration

It is recommended that various configuration parameters are verified prior to installation into the process. The various parameters are detailed out for each configuration tool. Depending on what configuration tool(s) are available, follow the steps listed relevant to each tool.

2.5.1 Verify configuration using the Field Communicator

Configuration parameters listed in Table 2-3 below are the basic parameters that should be reviewed prior to transmitter installation. A full list of configuration parameters that can be reviewed and configured using a Field Communicator are located in Field Communicator Menu Trees and Fast Keys. A Rosemount 644 Device Descriptor (DD) must be installed on the Field Communicator to verify configuration.

Verify device configuration using Fast Key sequences in Table 2-3.

From the ***HOME*** screen, enter the Fast Key sequences listed in Table 2-3.

Table 2-3: Device Dashboard Fast Key Sequences

Function	HART 5	HART 7
Alarm Values	2, 2, 5, 6	2, 2, 5, 6
Damping Values	2, 2, 1, 5	2, 2, 1, 6
Lower Range Value (LRV)	2, 2, 5, 5, 3	2, 2, 5, 5, 3

Table 2-3: Device Dashboard Fast Key Sequences *(continued)*

Function	HART 5	HART 7
Upper Range Value (URV)	2, 2, 5, 5, 2	2, 2, 5, 5, 2
Primary Variable	2, 2, 5, 5, 1	2, 2, 5, 5, 1
Sensor 1 Configuration	2, 1, 1	2, 1, 1
Sensor 2 Configuration (1)	2, 1, 1	2, 1, 1
Tag	2, 2, 7, 1, 1	2, 2, 7, 1, 1
Units	2, 2, 1, 5	2, 2, 1, 4

(1) Available only if option code (S) or (D) is ordered.

2.5.2 Verify configuration using the AMS Device Manager

Procedure

1. Right click on the device and select **Configuration Properties** from the menu.
2. Navigate the tabs to review the transmitter configuration data.

2.5.3 Verify configuration using the LOI

Procedure

1. Press any configuration button to activate the LOI.
2. Select **VIEW CONFIG** to review the below parameters.
3. Use the configuration buttons to navigate through the menu.

   The parameters to be reviewed prior to installation include:

   - Tag
   - Sensor configuration
   - Units
   - Alarm and saturation levels
   - Primary variable
   - Range values
   - Damping

2.5.4 Checking transmitter output

Before performing other transmitter on-line operations, review the transmitter digital output parameters to ensure that the transmitter is operating properly and is configured to the appropriate process variables.

Checking or setting process variables

The “Process Variables” menu displays process variables, including sensor temperature, percent of range, analog output, and terminal temperature. These process variables are continuously updated. The default primary variable is Sensor 1. The secondary variable is the transmitter terminal temperature by default.

Check or set process variables using the Field Communicator

From the ***HOME*** screen, enter the Fast Key sequence.

Device Dashboard Fast Keys	3, 2, 1

Check or set process variables using the AMS Device Manager

Procedure

- Right click on the device and select **Service Tools** from the menu.
  The ***Variables*** tab displays the following process variables:
  - Primary, second, third, and fourth variables, as well as the analog output.

Check or set process variables using LOI

Procedure

1. To check the process variables from the LOI, the user must first configure the display to show the desired variables (see Configuring the LCD display).
2. Once the desired device variables are chosen, simply exit the LOI menu and view the alternating values on the display screen.

Figure 2-4: Check or set process variables using LOI

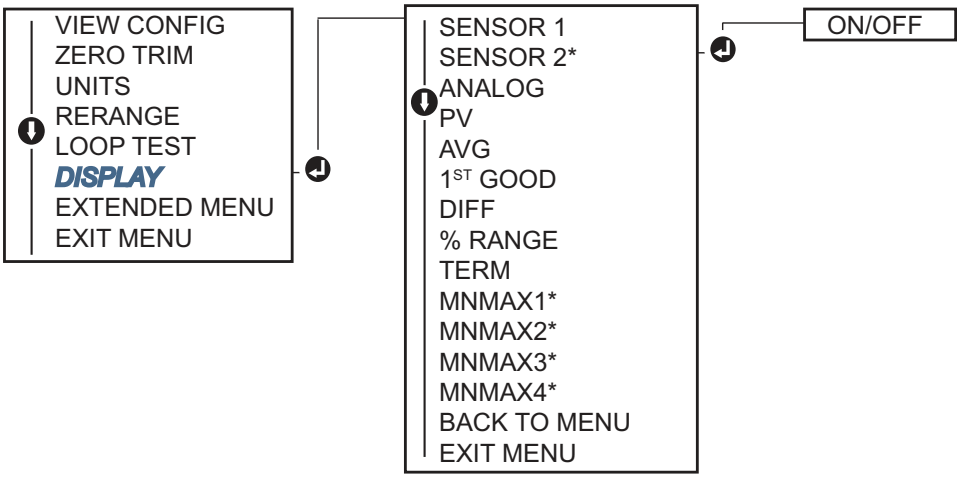

2.6 Basic configuration of the transmitter

The transmitter must be configured for certain basic variables in order to be operational. In many cases, all of these variables are pre-configured at the factory. Configuration may be required if the transmitter is not configured or if the configuration variables need revision.

2.6.1 Mapping the HART variables

Mapping HART variables using the Field Communicator

The “Variable Mapping” menu displays the sequence of the process variables. Select the sequence below to change this configuration. The transmitter single sensor input configuration screens allow selection of the primary variable (PV) and the secondary variable (SV). When the *Select PV screen* appears, **Snsr 1** must be selected.

The transmitter dual-sensor option configuration screens allow selection of the Primary Variable (PV), Secondary Variable (SV), Tertiary Variable (TV), and Quaternary Variable (QV). Variable choices are Sensor 1, Sensor 2, Differential Temperature, Average Temperature, Terminal Temperature, and Not Used. The 4–20 mA analog signal represents the Primary Variable.

From the ***HOME*** screen, enter the Fast Key sequence.

Device Dashboard Fast Keys	2, 2, 8, 6

Mapping HART variables using the AMS Device Manager

Procedure

1. Right click on the device and select the **Configure** menu.
2. In the left navigation pane, select **Manual Setup** then on the HART tab.
3. Map each variable individually or use the Re-map Variables method to guide you through the re-mapping process.
4. Select **Apply** when complete.

Mapping HART variables using LOI

Follow flow chart to select the desired mapped variables.

Procedure

1. Use the **SCROLL** and **ENTER** buttons to select each variable.
2. Save by selecting **SAVE** as indicated on the LCD screen when prompted.

   See Figure 2-5 for an example of a mapped variable with the LOI.

Figure 2-5: Mapping Variables with LOI

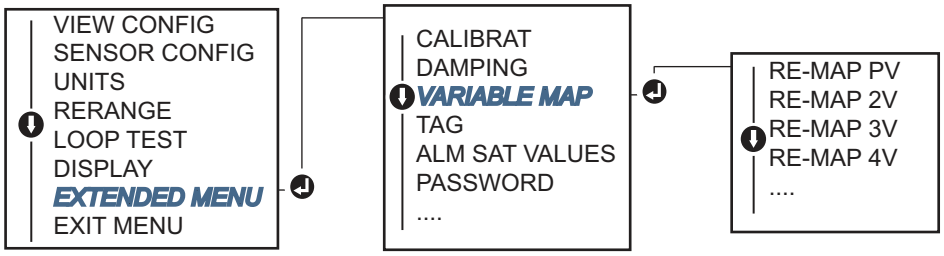

2.6.2 Configuring the sensor(s)

Sensor configuration includes setting the information for:

- Sensor type
- Connection type
- Units
- Damping values
- Sensor serial number
- RTD 2-wire offset

Configure the sensors using a Field Communicator

The configure sensors method will guide you through the configuration of all necessary settings associated with configuring a sensor including:

For a full list of Sensor Types available with the Rosemount 644 Transmitter and their associated levels of accuracy.

From the ***HOME*** screen, enter the Fast Key sequence.

Device Dashboard Fast Keys	2, 1, 1

Configure the sensors using AMS Device Manager

Procedure

1. Right click on the device and select **Configure**.
2. In the left navigation pane select **Manual Setup** and select the **Sensor 1** or **Sensor 2** tab depending on the need.
3. Individually select the sensor type, connection, units and other sensor related information as desired from the drop down menus on the screen.
4. Select **Apply** when complete.

Configure sensors using LOI

Reference Figure 2-6 for guidance on where to find Sensor Configuration in the LOI menu.

Figure 2-6: Configuring Sensors with LOI

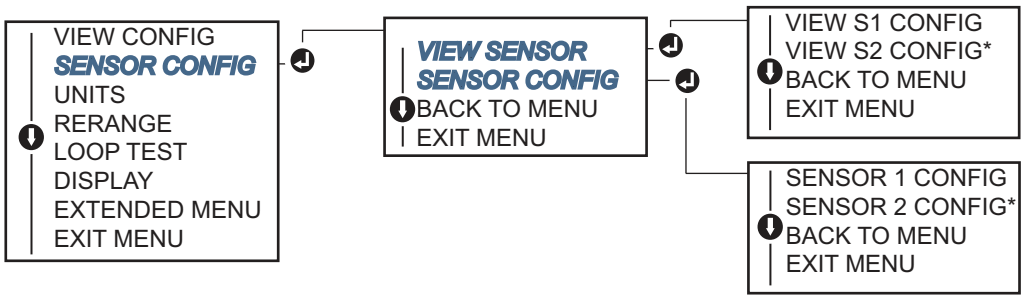

Note
Sensor 2 configuration is available only if option code (S) or (D) is ordered.

Contact an Emerson representative for information on the temperature sensors, thermowells, and accessory mounting hardware that is available through Emerson.

2.6.3 2-wire RTD offset

The 2-wire offset feature allows the measured lead wire resistance to be input and corrected for, which results in the transmitter adjusting its temperature measurement for the error caused by this added resistance. Because of a lack of lead wire compensation within the RTD, temperature measurements made with a 2-wire RTD are often inaccurate.

This feature can be configured as a subset of the sensor configuration process in the Field Communicator, AMS Device Manager, and the LOI.

To utilize this feature properly perform the following steps:

Procedure

1. Measure the lead wire resistance of both RTD leads after installing the 2-wire RTD and transmitter.
2. Navigate to the 2-wire RTD offset parameter.
3. Enter the total measured resistance of the two RTD leads at the 2-wire offset prompt to ensure proper adjustment. The transmitter will adjust its temperature measurement to correct the error caused by lead wire resistance.

Set 2-wire RTD offset using the Field Communicator

From the *HOME* screen, enter the Fast Key sequence.

Device Dashboard Fast Keys	2, 1, 1

Set 2-wire RTD offset using the AMS Device Manager

Procedure

1. Right click on the device and select **Configure**.
2. In the left navigation pane select **Manual Setup** and select the **Sensor 1** or **Sensor 2** tab depending on the need. Find the 2-wire offset text field and enter the value.
3. Select **Apply** when complete.

2.6.4 Setting output units

The Units can be configured for a number of different parameters in the Rosemount 644 Transmitter. Individual Units can be configured for:

- Sensor 1
- Sensor 2
- Terminal temperature
- Differential temperature
- Average temperature
- First good temperature

Each of the base parameters and calculated outputs from those values can have a unit of measure associated with it. Set the transmitter output to one of the following engineering units:

- Celsius
- Fahrenheit
- Rankine
- Kelvin
- Ohms
- Millivolts

Set output limits using Field Communicator

From the *HOME* screen, enter the Fast Key sequence.

	HART 5	HART 7
Device Dashboard Fast Keys	2, 2, 1, 4	2, 2, 1, 5

Set output limits using AMS Device Manager

Procedure

1. Right click on the device and select **Configure**.
2. In the left navigation pane select **Manual Setup**. The unit fields for various variables are spread over the Manual Setup tabs, click through the tabs and change the desired units.
3. Select **Apply** when complete.

Set output limits using LOI

Reference the below image for where to find the Units configuration in the LOI menu.

Figure 2-7: Configuring Units with LOI

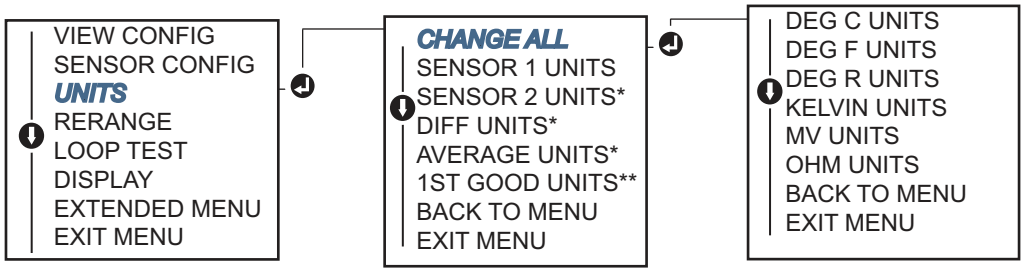

* Available only if option code (S) or (D) is ordered.

** Available only if option codes (S) and (DC) are both ordered, or if option codes (D) and (DC) are both ordered.

Note
The list of choices available for Units after the primary menu is dependent on your Sensor configuration settings.

2.7 Configure dual sensor options

Dual-sensor configuration deals with the functions that can be used with a transmitter ordered with Dual Sensor inputs. In the Rosemount 644 Transmitter these functions include:

- Differential temperature
- Average temperature
- Hot Backup™ and sensor drift alert diagnostics (requires option code DC)
  - First good temperature (requires options S and DC, or options D and DC)

2.7.1 Differential temperature configuration

The Rosemount 644 Transmitter ordered and configured for dual-sensors can accept any two inputs then display the differential temperature between them. Use the following procedures to configure the transmitter to measure differential temperature.

Note
This procedure assumes the differential temperature is a calculated output of the device but does not re-assign it as the primary variable. If it desired for Differential to be the transmitter's primary variable see Mapping the HART variables to set it to PV.

Configure differential temperature configuration using Field Communicator

From the *HOME* screen, enter the Fast Key sequence.

Device Dashboard Fast Keys	2, 2, 3, 1

Configure differential temperature configuration using AMS Device Manager

Procedure

1. Right click on the device and select **Configure**.
2. In the left navigation pane choose **Manual Setup**.
3. On the **Calculated Output** Tab find the **Differential Temperature** group box.
4. Select Units and Damping settings then select **Apply** when complete.

Configure differential temperature configuration using LOI

To configure the Differential Temperature on the LOI, the Units and Damping values must be set separately. Reference figures below for where to find these in the menu.

Figure 2-8: Configuring Differential Units with LOI

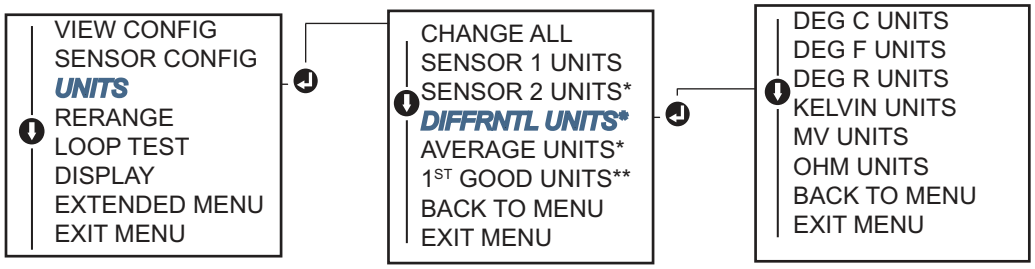

* Available only if option code (S) or (D) is ordered.

** Available only if option codes (S) and (DC) are both ordered, or if option codes (D) and (DC) are both ordered.

Figure 2-9: Configuring Differential Damping with LOI

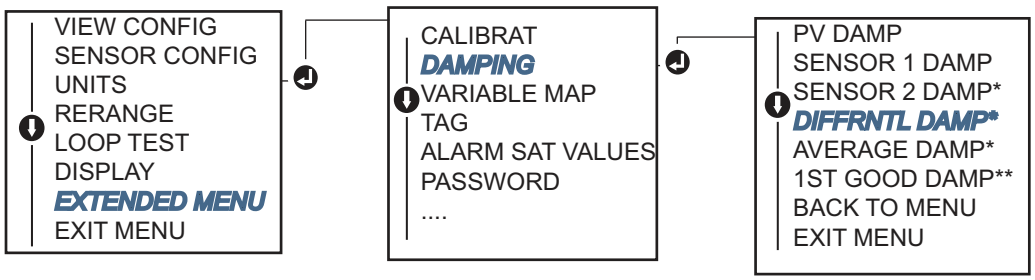

* Available only if option code (S) or (D) is ordered.

** Available only if option codes (S) and (DC) are both ordered, or if option codes (D) and (DC) are both ordered.

2.7.2 Average temperature configuration

The Rosemount 644 Transmitter ordered and configured for dual-sensors can output and display the average temperature of any two inputs. Use the following procedures to configure the transmitter to measure the average temperature:

Note
This procedure assumes the average temperature is a calculated output of the device but does not reassign it as the primary variable. If it is desired for average to be the transmitter's primary variable see Mapping the HART variables to set it to PV.

Configure average temperature using Field Communicator

From the *HOME* screen, enter the Fast Key sequence.

Device Dashboard Fast Keys	2, 2, 3, 3

Configure average temperature using AMS Device Manager

Procedure

1. Right click on the device and select **Configure**.
2. In the left navigation pane select **Manual Setup**.
3. On the **Calculated Output** Tab find the Average Temperature group box.
4. Select Units and Damping settings then select **Apply** when complete.

Configure average temperature using LOI

Procedure

- To configure average temperature on the LOI, the units and damping values must be set separately. Reference Figure 2-10 and Figure 2-11 below for where to find these in the menu.

Figure 2-10: Configuring Average Units with LOI

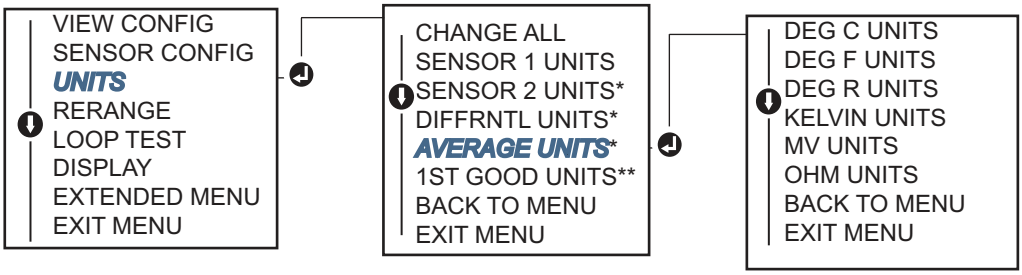

* Available only if option code (S) or (D) is ordered.

** Available only if option codes (S) and (DC) are both ordered, or if option codes (D) and (DC) are both ordered.

Figure 2-11: Configuring Average Damping with LOI

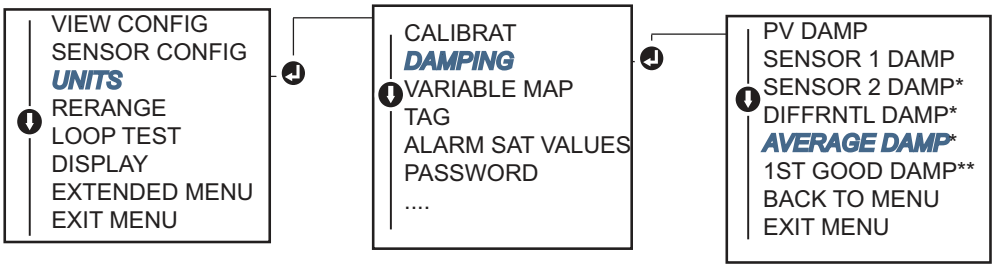

* Available only if option code (S) or (D) is ordered.

** Available only if option codes (S) and (DC) are both ordered, or if option codes (D) and (DC) are both ordered.

Note

If Sensor 1 and/or Sensor 2 should fail while PV is configured for average temperature and Hot Backup™ is not enabled, the transmitter will go into alarm. For this reason, it is recommended when PV is Sensor Average, that Hot Backup be enabled when dual-element sensors are used, or when two temperature measurements are taken from the same point in the process. If a sensor failure occurs when Hot Backup is enabled, while PV is Sensor Average, three scenarios could result:

— If Sensor 1 fails, the average will only be reading from Sensor 2, the working sensor

— If Sensor 2 fails, the average will only be reading from Sensor 1, the working sensor

— If both sensors fail simultaneously, the transmitter will go into alarm and the status available (via HART®) states that both Sensor 1 and Sensor 2 have failed

In the first two scenarios, the 4–20 mA signal is not disrupted and the status available to the control system (via HART) specifies which sensor has failed.

2.7.3 Hot Backup configuration

The Hot Backup™ feature configures the transmitter to automatically use Sensor 2 as the primary sensor if Sensor 1 fails. With Hot Backup enabled, the primary variable (PV) must either be first good or average. See the Note for details on using Hot Backup when the PV is set to Sensor Average.

Sensors 1 or 2 can be mapped as the secondary variable (SV), tertiary variable (TV), or quaternary variable (QV). In the event of a primary variable (Sensor 1) failure, the transmitter enters Hot Backup mode and Sensor 2 becomes the PV. The 4–20 mA signal is not disrupted, and a status is available to the control system through HART® that Sensor 1 has failed. An LCD display, if attached, displays the failed sensor status.

While configured to Hot Backup, if Sensor 2 fails but Sensor 1 is still operating properly, the transmitter continues to report the PV 4–20 mA analog output signal, while a status is available to the control system through HART that Sensor 2 has failed.

Resetting Hot Backup

In Hot Backup™ mode, if Sensor 1 does fail and Hot Backup is initiated, the transmitter will not revert back to Sensor 1 to control the 4–20 mA analog output until the Hot Backup mode is reset by re-enabling through HART®, re-setting it through the LOI or by briefly powering down the transmitter.

Configure Hot Backup using Field Communicator

The Field Communicator will walk you through a method to correctly configure the necessary elements of the Hot Backup feature.

From the *HOME* screen, enter the Fast Key sequence.

Device Dashboard Fast Keys	2, 1, 5

Configure Hot Backup using AMS Device Manager

Procedure

1. Right click on the device and select **Configure**.
2. In the left navigation pane select **Manual Setup**.
3. On the Diagnostics Tab find the **Hot Backup** group box.

4. Choose the button **Configure Hot Backup** or **Reset Hot Backup** depending on the desired function and walk through the guided steps.
5. Select **Apply** when complete.

Configure Hot Backup using LOI

To configure Hot Backup™ on the LOI, enable the mode and set the PV values. Reference Figure 2-12 for where to find these in the menu.

Figure 2-12: Configuring Hot Backup with LOI

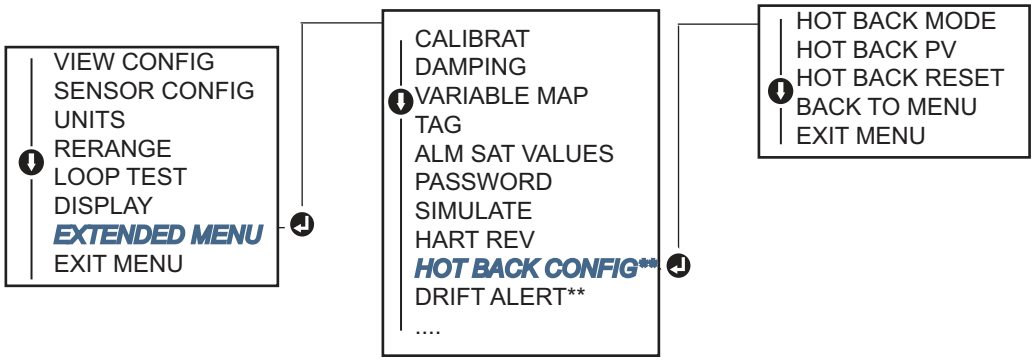

* Available only if option code (S) or (D) is ordered.

** Available only if option codes (S) and (DC) are both ordered, or if option codes (D) and (DC) are both ordered.

For information on using Hot Backup with HART Tri-Loop™ see Using the transmitter with the HART Tri-Loop.

2.7.4 Sensor drift alert configuration

The sensor drift alert command allows the transmitter to set a warning flag (through HART), or go into analog alarm when the temperature difference between Sensor 1 and Sensor 2 exceeds a user-defined limit.

This feature is useful when measuring the same process temperature with two sensors, ideally when using a dual-element sensor. When sensor drift alert mode is enabled, the user sets the maximum allowable difference, in engineering units, between sensor 1 and sensor 2. If this maximum difference is exceeded, a sensor drift alert warning flag will be set.

Though it defaults to WARNING, when configuring the transmitter for sensor drift alert, the user also has the option of specifying the analog output of the transmitter go into ALARM when sensor drifting is detected.

Note
Using dual sensor configuration in the Rosemount 644 Transmitter, the transmitter supports the configuration and simultaneous use of Hot Backup and sensor drift alert. If one sensor fails, the transmitter switches output to use the remaining good sensor. Should the difference between the two sensor readings exceed the configured threshold, the AO will go to alarm indicating the sensor

drift condition. The combination of sensor drift alert and Hot Backup improves sensor diagnostic coverage while maintaining a high level of availability. Refer to the Rosemount 644 FMEDA report for the impact on safety.

Configure sensor drift alert using Field Communicator

The Field Communicator will guide you through a method to correctly configure the necessary elements of a sensor drift alert feature.

From the *HOME* screen, enter the Fast Key sequence.

Device Dashboard Fast Keys	2, 1, 6

Configure sensor drift alert using AMS Device Manager

Procedure

1. Right click on the device and select **Configure**.
2. On the **Diagnostics** Tab find the **Sensor Drift Alert** group box.
3. Select to **Enable** the **Mode** and fill in the **Units**, **Threshold** and **Damping** values from the drop downs provided or select the **Configure Sensor Drift Alert** button and walk through the guided steps.
4. Select **Apply** when complete.

Configure sensor drift alert using LOI

To configure sensor drift alert on the LOI, enable the mode, then set the PV, drift limit, and value for drift alert damping all separately. Reference figure below for where to find these in the menu.

Figure 2-13: Configuring Sensor Drift Alert with LOI

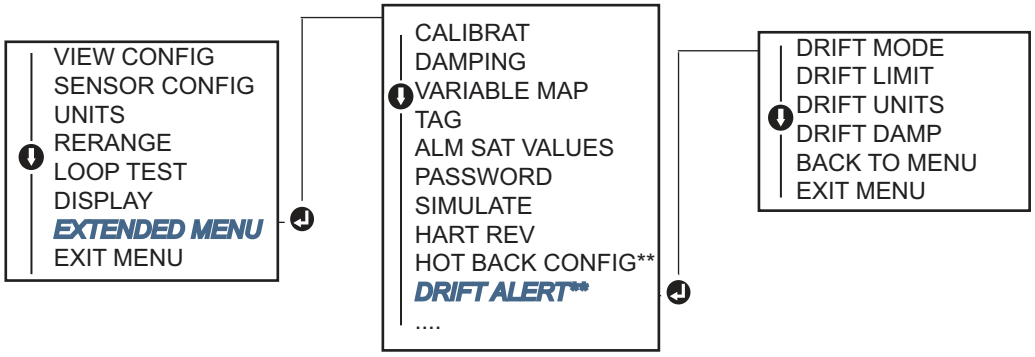

* Available only if option code (S) or (D) is ordered.

** Available only if option codes (S) and (DC) are both ordered, or if option codes (D) and (DC) are both ordered.

Note
Enabling the drift alert option to WARNING will set a flag (through the HART communications) whenever the maximum acceptable difference between Sensor 1 and Sensor 2 has been exceeded. For the transmitter's analog signal to go into ALARM when drift alert is detected, select alarm during the configuration process.

2.8 Configure device outputs

2.8.1 Re-range the transmitter

Re-ranging the transmitter sets the measurement range to the limits of the expected readings for a certain application. Setting the measurement range to the limits of expected readings maximizes transmitter performance; the transmitter is most accurate when operated within the expected temperature range for the application.

The range of expected readings is defined by the Lower Range Value (LRV) and Upper Range Value (URV). The transmitter range values can be reset as often as necessary to reflect changing process conditions. For a complete listing of Range and Sensor limits.

Note
The re-range functions should not be confused with the trim functions. Although the re-range function matches a sensor input to a 4–20 mA output, as in conventional calibration, it does not affect the transmitter's interpretation of the input.

Select from one of three methods to re-range the transmitter.

Re-range the transmitter using Field Communicator

From the *HOME* screen, enter the Fast Key sequence.

	Lower range value	Upper range value
Device Dashboard Fast Keys	2, 2, 5, 5, 3	2, 2, 5, 5, 2

Re-range the transmitter using AMS Device Manager

Procedure

1. Right click on the device and select **Configure**.
2. In the left navigation pane select **Manual Setup**.
3. On the **Analog Output** Tab find the Primary Variable Configuration group box.
4. Change the **Upper Range Value** and **Lower Range Value** to their desired settings.
5. Select **Apply** when complete.

Re-range the transmitter using LOI

Reference the image below to find the range value configuration path on the LOI.

Figure 2-14: Re-ranging the Transmitter with LOI



2.8.2 Damping

The damping function changes the response time of the transmitter to smooth variations in output readings caused by rapid changes in input. Determine the appropriate damping setting based on the necessary response time, signal stability, and other requirements of the loop dynamics of the system. The default damping value is 5.0 seconds and can be reset to any value between 1 and 32 seconds.

The value chosen for damping affects the response time of the transmitter. When set to zero (disabled), the damping function is off and the transmitter output reacts to changes in input as quickly as the intermittent sensor algorithm allows. Increasing the damping value increases transmitter response time.

With damping enabled, if the temperature change is within 0.2 percent of the sensor limits, the transmitter measures the change in input every 500 milliseconds (for a single sensor device) and outputs values according to the following relationship:

$$Damped\ value\ =\ (N-P)x\left(\frac{2T-U}{2T+U}\right)+P$$

P = previous damped value

N = new sensor value

T = damping time constant

U = update rate

At the value to which the damping time constant is set, the transmitter output is at 63 percent of the input change and it continues to approach the input according to the damping equation above.

For example, as illustrated in Figure 2-15, if the temperature undergoes a step change—within 0.2 percent of the sensor limits—from 100 to 110 degrees, and the damping is set to 5.0 seconds, the transmitter calculates and reports a new reading every 500 milliseconds using the damping equation. At 5.0 seconds, the transmitter outputs 106.3 degrees, or 63 percent of the input change, and the output continues to approach the input curve according to the equation above.

For information regarding the damping function when the input change is greater than 0.2 percent of the sensor limits, refer to Intermittent sensor detection.

Figure 2-15: Change in Input vs. Change in Output with Damping Set to Five Seconds

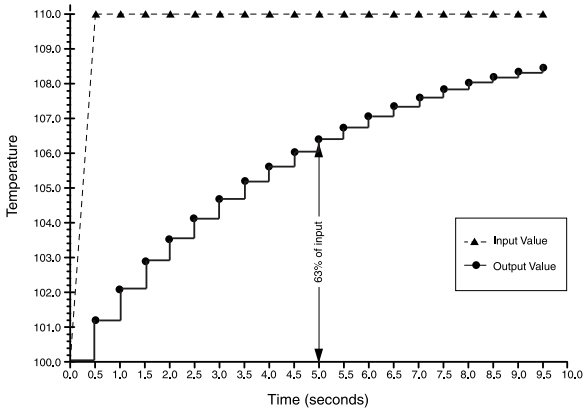

Damping can be applied to a number of parameters in the Rosemount 644 Transmitter. Variables that can be damped are:

- Primary Variable (PV)
- Sensor 1
- Sensor 2
- Differential temperature
- Average temperature
- First good temperature

Note
The instructions below only refer to the damping of the Primary Variable (PV).

Set damping value using Field Communicator

From the *HOME* screen, enter the Fast Key sequence.

	HART 5	HART 7
Device Dashboard Fast Keys	2, 2, 1, 5	2, 2, 1, 6

Set damping value using AMS Device Manager

Procedure

1. Right click on the device and select **Configure**.
2. In the left navigation pane select **Manual Setup**.
3. On the **Sensor 1** Tab find the Setup group box.
4. Change the **Damping Value** to the desired setting.
5. Select **Apply** when complete.

Set damping value using LOI

Reference the figure below to find the damping configuration path on the LOI.

Figure 2-16: Set damping value using LOI

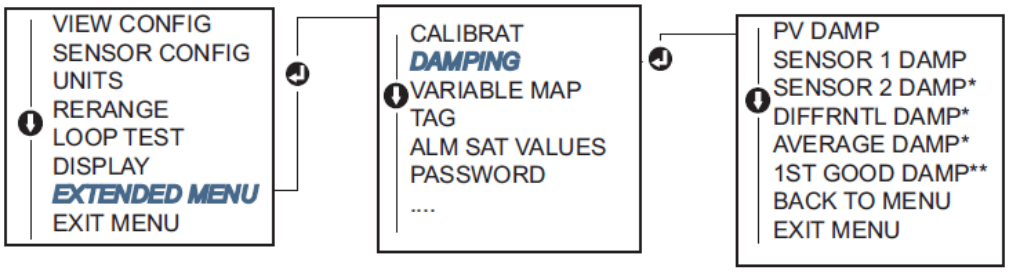

2.8.3 Configure alarm and saturation levels

In normal operation, the transmitter will drive the output in response to measurements between the lower to upper saturation points. If the temperature goes outside the sensor limits, or if the output would be beyond the saturation points, the output will be limited to the associated saturation point.

The transmitter automatically and continuously performs self-diagnostic routines. If the self-diagnostic routines detect a failure, the transmitter drives the output to configured alarm value based on the position of the alarm switch. The Alarm and Saturation settings allow the alarm settings (Hi or Low) and saturation values to be viewed and changed.

Failure mode alarm and saturation levels can be configured using a Field Communicator, AMS Device Manager, and the LOI. The following limitations exist for custom levels:

- The low alarm value must be less than the Low Saturation level.
- The high alarm value must be higher than the High Saturation level.
- Alarm and Saturation levels must be separated by at least 0.1 mA

The configuration tool will provide an error message if the configuration rule is violated.

See table below for the common alarm and saturation levels.

Table 2-4: Rosemount Alarm and Saturation Values

Units - mA	Min	Max	Rosemount	NAMUR
High alarm	21	23	21.75	21.0
Low alarm(1)	3.5	3.75	3.75	3.6
High saturation	20.5	20.9(2)	20.5	20.5
Low saturation(1)	3.7(3)	3.9	3.9	3.8

(1) Requires 0.1 mA gap between low alarm and low saturation values.

(2) Rail mount transmitters have a high saturation max of 0.1 mA less than the high alarm setting, with a max value of 0.1 mA less than the high alarm max.
(3) Rail mount transmitters have a low saturation min of 0.1 mA greater than the low alarm setting, with a minimum of 0.1 mA greater than the low alarm min.

Note
Transmitters set to HART multidrop mode send all saturation and alarm information digitally; saturation and alarm conditions will not affect the analog output.

Configure alarm and saturation levels using Field Communicator

From the *HOME* screen, enter the Fast Key sequence.

Device Dashboard Fast Keys	2, 2, 5, 6

Configure alarm and saturation levels using AMS Device Manager

Procedure

1. Right click on the device and select **Configure**.
2. In the left navigation pane select **Manual Setup**.
3. On the **Analog Output** Tab find the Alarm and Saturation Levels group box.
4. Enter the High Alarm, High Saturation, Low Saturation and Low Alarm levels to the desired vales.
5. Select **Apply** when complete.

Configure alarm and saturation levels using LOI

Reference the Figure 2-17 below to find the alarm and saturation value configuration path on the LOI.

Figure 2-17: Configuring Alarm and Saturation Values with LOI

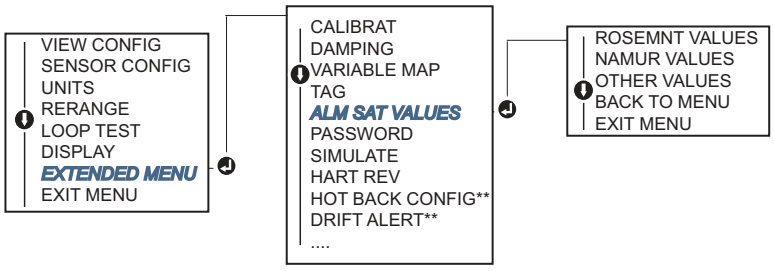

* Available only if option code (S) or (D) is ordered.

** Available only if option codes (S) and (DC) are both ordered, or if option codes (D) and (DC) are both ordered.

2.8.4 Configuring the LCD display

The LCD display configuration command allows customization of the LCD display to suit application requirements. The LCD display will alternate between the selected items with each item displaying for a three seconds interval.

- Sensor 1
- Sensor 2
- Analog output
- Primary variable
- Average temperature
- First good temperature
- Differential temperature
- Percent of range
- Terminal temperature
- Min and max 1
- Min and max 2
- Min and max 3
- Min and max 4

Reference Figure 2-18 to view the differences between the LCD display and LOI options available with the transmitter.

Figure 2-18: LOI and LCD Display

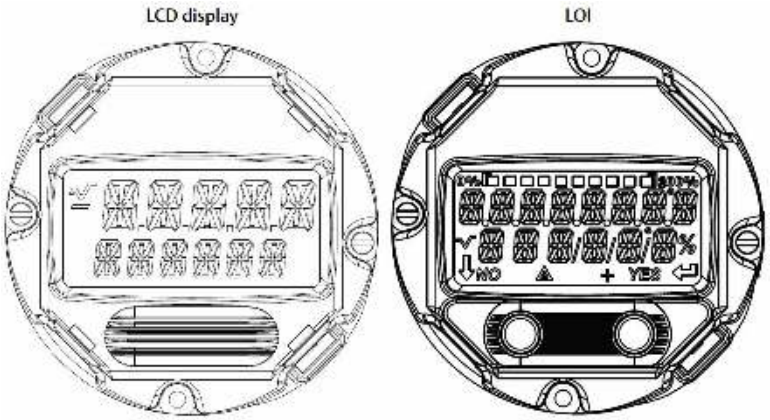

Configure the LCD display using Field Communicator

From the *HOME* screen, enter the Fast Key sequence.

Device Dashboard Fast Keys	2, 1, 4

Configure the LCD display using AMS Device Manager

Procedure

1. Right click on the device and select **Configure**.
2. In the left navigation pane select **Manual Setup**.

Note
On the **Display** tab there will be a group box with all available variables that can be displayed.

3. Check and uncheck the desired display variables, with a checked box indicating that the variable will be displayed.
4. Select **Apply** when complete.

Configure the LCD display using LOI

Reference Figure 2-19 to find the LCD display value configuration path on the LOI.

Figure 2-19: Configuring the LCD Display using LOI

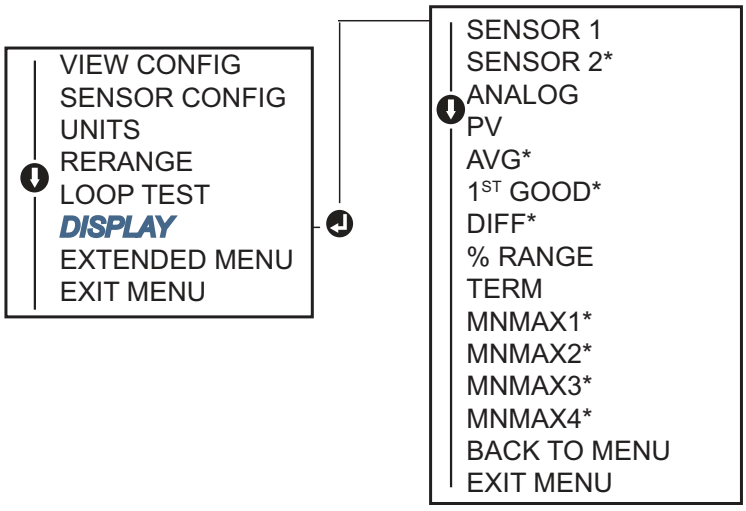

*Available only if option code (S) or (D) is ordered.

2.9 Inputting device information

Access the transmitter information variables online using the Field Communicator or other suitable communications device. The following is a list of transmitter information variables, including device identifiers, factory-set configuration variables, and other information.

2.9.1 Tag, Date, Descriptor, and Message

The Tag, Date, Descriptor, and Message are parameters that provide transmitter identification in large installations.

The **Tag** variable is the easiest way to identify and distinguish between different transmitters in multi-transmitter environments. It is used to label transmitters electronically according to the requirements of the application. The defined Tag is automatically displayed when a HART®-based communicator establishes contact with the transmitter at power-up. The Tag is up to eight characters and the Long Tag (a parameter introduced with the HART 6 and 7 protocol) was extended to 32 characters long. Neither parameter has any impact on the primary variable readings of the transmitter, it is only for information.

The **Date** is a user-defined variable that provides a place to save the date of the last revision of configuration information. It has no impact on the operation of the transmitter or the HART-based communicator.

The **Descriptor** variable provides a longer user-defined electronic label to assist with more specific transmitter identification than is available with tag. The Descriptor may be up to 16 characters long and has no impact on the operation of the transmitter or the HART-based communicator.

The **Message** variable provides the most specific user-defined means for identifying individual transmitters in multi-transmitter environments. It allows for 32 characters of information and is stored with the other configuration data. The Message variable has no impact on the operation of the transmitter or the HART-based communicator.

Input device information using Field Communicator

From the *HOME* screen, enter the Fast Key sequence.

Device Dashboard Fast Keys	1, 8

Input device information using AMS Device Manager

Procedure

1. Right click on the device and select **Configure**.
2. In the left navigation pane select **Manual Setup**.
3. On the **Device** Tab there will be a group box called identification. Enter the desired characters in the **Tag**, **Date**, **Descriptor**, and **Message** fields
4. Select **Apply** when complete.

Input device information using LOI

Reference Figure 2-20 to find the tag configuration path in the LOI.

Figure 2-20: Configuring the Tag with LOI

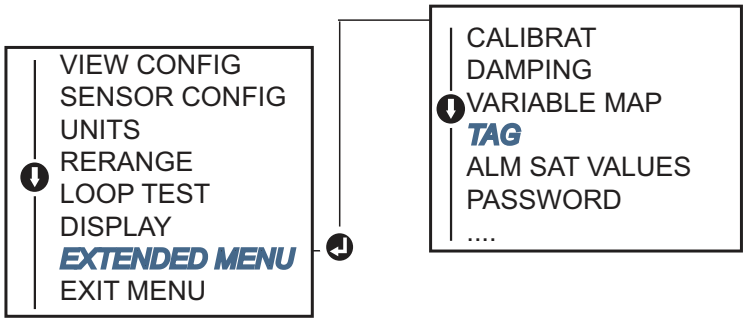

2.10 Configure measurement filtering

2.10.1 50/60 Hz filter

The 50/60 Hz Filter (also known as Line Voltage Filter or AC Power Filter) function sets the transmitter electronic filter to reject the frequency of the AC power supply in the plant. The 60 or 50 Hz mode can be chosen. The factory default for this setting is 50 Hz.

Configure measurement filtering using Field Communicator

From the ***HOME*** screen, enter the Fast Key sequence.

Device Dashboard Fast Keys	2, 2, 7, 4, 1

Configure measurement filtering using AMS Device Manager

Procedure

1. Right click on the device and select **Configure**.
2. In the left navigation pane select **Manual Setup**.
3. On the **Device** Tab there will be a group box called **Noise Rejection**. In the **AC Power Filter** box, select from the drop down menu.
4. Select **Apply** when complete.

2.10.2 Resetting the device

Processor Reset function resets the electronics without actually powering down the unit. It does not return the transmitter to the original factory configuration.

Reset the device using a Field Communicator

From the *HOME* screen, enter the Fast Key sequence.

Device Dashboard Fast Keys	3, 4, 6, 1

Reset the device using AMS Device Manager

Procedure

1. Right click on the device and select **Service Tools**.
2. In the left navigation pane select **Maintenance**.
3. On the ***Reset/Restore*** tab select the **Processor Reset** button.
4. Select **Apply** when complete.

2.10.3 Intermittent sensor detection

The intermittent sensor detection feature (also known as the transient filter) is designed to guard against erratic process temperature readings caused by intermittent open sensor conditions. An intermittent sensor condition is an open sensor condition that lasts less than one update. By default, the transmitter is shipped with the intermittent sensor detection feature switched ON and the threshold value set at 0.2 percent of sensor limits. The intermittent sensor detect feature can be switched ON or OFF and the threshold value can be changed to any value between 0 and 100 percent of the sensor limits with a Field Communicator.

When the intermittent sensor detection feature is switched ON, the transmitter can eliminate the output pulse caused by intermittent open sensor conditions. Process temperature changes (T) within the threshold value will be tracked normally by the transmitter's output. A (T) greater than the threshold value will activate the intermittent sensor algorithm. True open sensor conditions will cause the transmitter to go into alarm.

The threshold value of the transmitter should be set at a level that allows the normal range of process temperature fluctuations; too high and the algorithm will not be able to filter out intermittent conditions; too low and the algorithm will be activated unnecessarily. The default threshold value is 0.2 percent of the sensor limits.

When the intermittent sensor detection feature is switched OFF, the transmitter tracks all process temperature changes, even from an intermittent sensor. (The transmitter behaves as though the threshold value had been set at 100 percent.) The output delay due to the intermittent sensor algorithm will be eliminated.

Configure intermittent sensor detect using a Field Communicator

The following steps indicate how to turn the intermittent sensor detect (or transient filter) feature ON or OFF. When the transmitter is connected to a Field Communicator, use the Fast Key sequence and choose ON (normal setting) or OFF.

From the *HOME* screen, enter the Fast Key sequence.

Device Dashboard Fast Keys	2, 2, 7, 4, 2

The threshold value can be changed from the default value of 0.2 percent. Turning the Intermittent Sensor Detect feature OFF or leaving it ON and increasing the threshold value above the default does not affect the time needed for the transmitter to output the correct alarm signal after detecting a true open sensor condition. However, the transmitter may briefly output a false temperature reading for up to one update in either direction up to the threshold value (100 percent of sensor limits if Intermittent Sensor Detect is OFF). Unless a rapid response rate is necessary, the suggested setting is ON with 0.2 percent threshold.

Configure intermittent sensor detect using AMS Device Manager

Procedure

1. Right click on the device and select **Configure**.
2. In the left navigation pane select **Manual Setup**.

   Note
   On the **Device** Tab there will be a group box called Noise Rejection, in the box **Transient Filter Threshold**, enter the desired percent.

3. Select **Apply** when complete.

2.10.4 Open sensor hold off

The open sensor hold off option, at the normal setting, enables the Rosemount 644 Transmitter to be more robust under heavy EMI conditions. This is accomplished by the software having the transmitter perform additional verification of the open sensor status prior to activating the transmitter alarm. If the additional verification shows that the open sensor condition is not valid, the transmitter will not go into alarm.

For users of the Rosemount 644 Transmitter that desire a more vigorous open sensor detection, the open sensor hold off option can be changed to a fast setting where the transmitter will report an open sensor condition without additional verification of whether or not the open condition is valid.

Note
In high noise environments, normal mode is recommended.

Configure open sensor hold off using a Field Communicator

From the ***HOME*** screen, enter the Fast Key sequence.

Device Dashboard Fast Keys	2, 2, 7, 3

Configure open sensor hold off using AMS Device Manager

Procedure

1. Right click on the device and select **Configure**.
2. In the left navigation pane select **Manual Setup**.
3. On the **Device** Tab there will be a group box called Open Sensor Hold Off. Change the Mode to either **Normal** or **Fast**.
4. Select **Apply** when complete.

2.11 Diagnostics and service

2.11.1 Perform a loop test

The analog loop test verifies the output of the transmitter, the integrity of the loop, and the operations of any recorders or similar devices installed in the loop. To initiate a loop test, follow the steps below.

The host system may provide a current measurement for the 4–20 mA HART® output. If not, connect a reference meter to the transmitter by either connecting the meter to the test terminals on the terminal block, or shunting transmitter power through the meter at some point in the loop.

Perform a loop test using a Field Communicator

From the ***HOME*** screen, enter the Fast Key sequence.

Device Dashboard Fast Keys	3, 5, 1

Perform a loop test using AMS Device Manager

Procedure

1. Right click on the device and select **Service Tools**.
2. In the left navigation pane select **Simulate**.
3. On the **Simulate** Tab find the Perform Loop Test button in the **Analog Output Verification** group box.
4. Follow the guided instructions and select **Apply** when complete.

Perform a loop test using LOI

Reference the Figure 2-21 to find the path to the loop test in the LOI menu.

Figure 2-21: Performing a Loop Test with the LOI

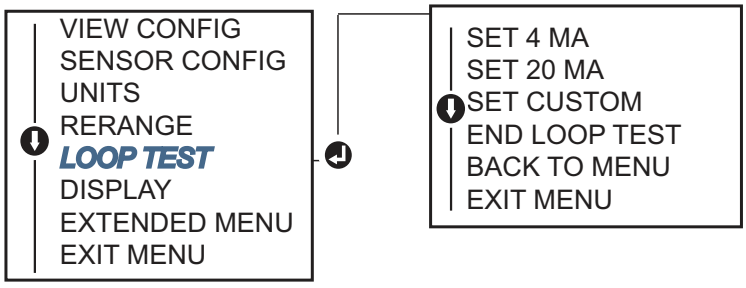

2.11.2 Simulate digital signal (digital loop test)

The simulate digital signal function adds to the analog loop test by confirming the HART output values are outputting correctly. Digital loop test is only available in HART Revision 7 mode.

Simulate a digital signal using a Field Communicator

From the *HOME* screen, enter the Fast Key sequence.

Device Dashboard Fast Keys	3, 5, 2

Simulate a digital signal using AMS Device Manager

Procedure

1. Right click on the device and select **Service Tools**.
2. In the left navigation window select **Simulate**.
3. In the group box labeled **Device Variables** select the variable to simulate.
   a) Sensor 1 Temperature
   b) Sensor 2 Temperature (only available with option S or D)
4. Follow the screen prompts to simulate selected digital value.

Simulate a digital signal using LOI

Reference the Figure 2-22 to find the path to the simulate digital signal in the LOI menu.

Figure 2-22: Simulating the Digital Signal with LOI

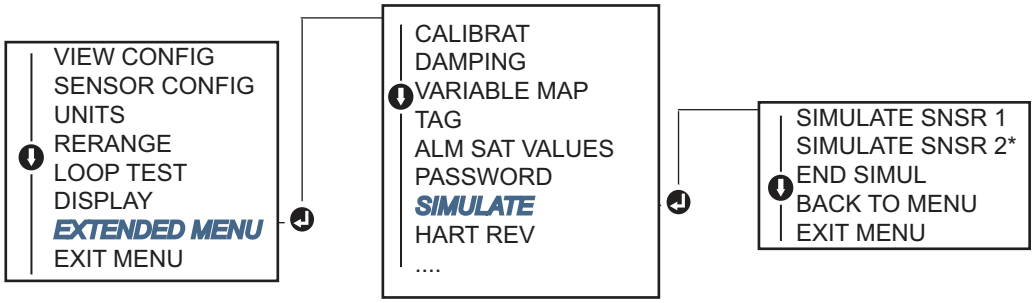

*Available only if option code (S) or (D) is ordered.

2.11.3 Thermocouple degradation diagnostic

Thermocouple degradation diagnostic acts as a gauge of the general health of the thermocouple and is indicative of any major changes in the status of the thermocouple or the thermocouple loop. The transmitter monitors the resistance of the thermocouple loop to detect drift conditions or wiring condition changes. The transmitter uses a baseline and threshold Trigger value and reports the suspected status of the thermocouple based off the difference between these values. This feature is not intended to be a precise measurement of thermocouple status, but is a general indicator of thermocouple and thermocouple loop health.

Thermocouple diagnostic must be Enabled as well as connected and configured to read a thermocouple type sensor. Once the diagnostic has been activated, a baseline resistance value is calculated. Then a Trigger threshold must be selected,

which can be two, three, or four times the baseline resistance, or the default of 5000 ohms. If the thermocouple loop resistance reaches the Trigger Level, a maintenance alert is generated.

⚠ CAUTION

The thermocouple degradation diagnostic monitors the health of the entire thermocouple loop, including wiring, terminations, junctions, and the sensor itself. Therefore, it is imperative that the diagnostic baseline resistance be measured with the sensor fully installed and wired in the process, and not on the bench.

Note
The thermocouple resistance algorithm does not calculate resistance values while the active calibrator mode is enabled.

Perform thermocouple degradation diagnostic using a Field Communicator

From the *HOME* screen, enter the Fast Key sequence.

Device Dashboard Fast Keys	2, 2, 4, 3, 4

Perform thermocouple degradation diagnostic using AMS Device Manager

Procedure

1. Right click on the device and select **Configure**.
2. In the left navigation window select **Manual Setup**.
3. On the Diagnostics tab, there is a group box labeled **Sensor and Process Diagnostics**; select the button for **Configure Thermocouple Diagnostic**.
4. Follow the screen prompts to Enable and set the values for the diagnostic. See AMS terms.

Perform thermocouple degradation diagnostic using LOI

Reference the Figure 2-23 to find the path to the thermocouple diagnostic in the LOI menu.

Figure 2-23: Configuring T/C Diagnostic with LOI

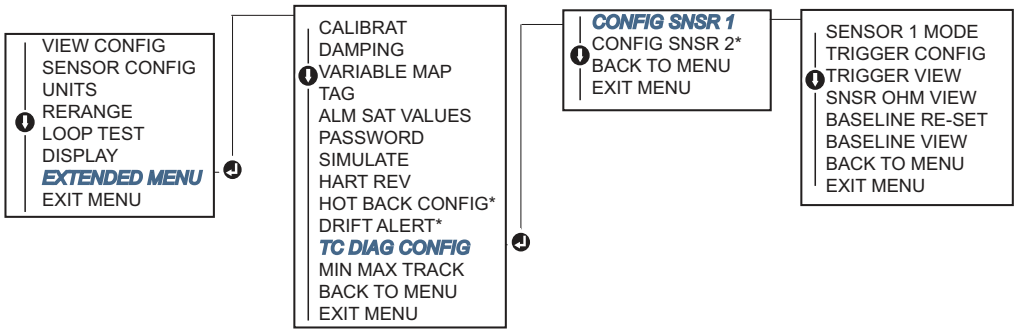

* Available only if option code (S) or (D) is ordered.

2.11.4 Minimum/maximum tracking diagnostic

Minimum and maximum temperature tracking (min/max tracking) when enabled records minimum and maximum temperatures with date and time stamps on Rosemount 644 HART Head Mount and Field Mount Temperature Transmitters. This feature records values for Sensor 1, Sensor 2, Differential, Average, First Good, and Terminal temperatures. Min/Max Tracking only records temperature maximum and minimum obtained since the last reset, and is not a logging function.

To track maximum and minimum temperatures, Min/Max Tracking must be enabled using a Field Communicator, AMS Device Manager, LOI, or other communicator. While enabled, this feature allows for a reset of information at any time, and all variables can be reset simultaneously. Additionally, each of the individual parameter's minimum and maximum values may be reset individually. Once a particular field has been reset, the previous values are overwritten.

Track minimum and maximum temperatures using a Field Communicator

From the ***HOME*** screen, enter the Fast Key sequence.

Device Dashboard Fast Keys	2, 2, 4, 3, 5

Track minimum and maximum temperatures using AMS Device Manager

Procedure

1. Right click on the device and select **Configure**.

2. In the left navigation window select **Manual Setup**.
3. On the Diagnostics tab, there is a group box labeled **Sensor and Process Diagnostics**; select the button for **Configure Min/Max Tracking**.
4. Follow the screen prompts to Enable and configure the settings for the diagnostic.

Track minimum and maximum temperatures using LOI

Reference the Figure 2-24 to find the path to configure min/max in the LOI menu

Figure 2-24: Configuring Min/Max Tracking with LOI

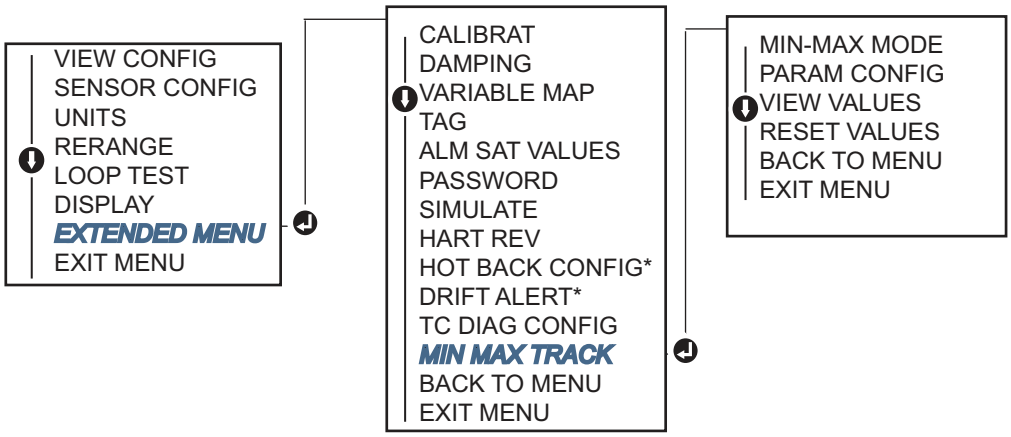

* Available only if option code (S) or (D) is ordered.

2.12 Establishing multi-drop communication

Multi-dropping refers to the connection of several transmitters to a single communications transmission line. Communication between the host and the transmitters takes place digitally with the analog output of the transmitters deactivated.

Many Rosemount transmitters can be multi-dropped. With the Field Communications protocol, up to 15 transmitters can be connected on a single twisted pair of wires or over leased phone lines.

A Field Communicator can test, configure, and format a multi-dropped Transmitter in the same way as in a standard point-to-point installation. The application of a multidrop installation requires consideration of the update rate necessary from each transmitter, the combination of transmitter models, and the length of the transmission line. Each transmitter is identified by a unique address (1–15) and responds to the commands defined in the HART protocol. A Field Communicator can test, configure, and format a multidropped transmitter the same as in a standard point-to-point installation.

Note
Multi-drop is not suitable for safety-certified applications and installations.

Figure 2-25: Typical Multi-dropped Network

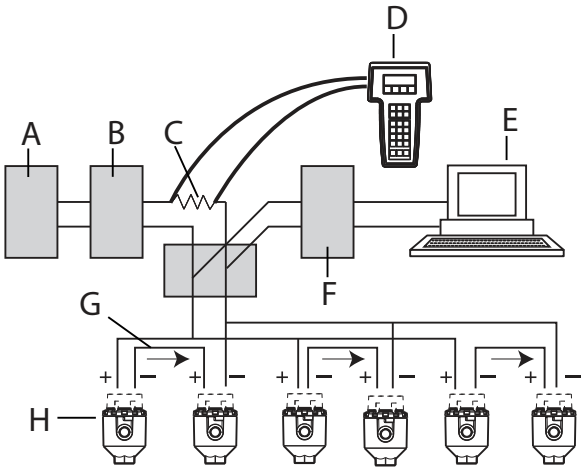

A. Power supply
B. Power supply impedance
C. 250 Ω
D. Field Communicator
E. Computer or DCS
F. HART interface
G. 4–20 mA
H. Transmitter

Note
Rosemount 644 Transmitters are set to address 0 at the factory, allowing them to operate in the standard point-to-point manner with a 4–20 mA output signal. To activate multidrop communication, the transmitter address must be changed to a number between 1 and 15. This change deactivates the 4–20 mA analog output, sending it to 4 mA. The failure mode current also is disabled.

2.12.1 Changing a transmitter address

To activate multi-drop communication, the transmitter poll address must be assigned a number from 1–15 for HART Revision 5, and 1–63 for HART Revision 7. Each transmitter in a multi dropped loop must have a unique poll address.

Change transmitter address using a Field Communicator

From the *HOME* screen, enter the Fast Key sequence.

Device Dashboard Fast Keys	1, 2, 1

Change transmitter address using AMS Device Manager

Procedure

1. Right click on the device and select **Configuration Properties** from the menu.
2. In HART Revision 5 mode:
   a) In the HART tab, enter poll address into the **Polling Address** box, select **Apply**.
3. In HART Revision 7 mode:
   a) In the HART tab, select the **Change Polling Address** button.

2.13 Using the transmitter with the HART Tri-Loop

To prepare the transmitter with dual-sensor option for use with a Rosemount 333 HART® Tri-Loop, the transmitter must be configured to Burst Mode and the process variable output order must be set. In Burst Mode, the transmitter provides digital information for the four process variables to the HART Tri-Loop. The HART Tri-Loop divides the signal into separate 4–20 mA loops for up to three of the following choices:

- Primary Variable (PV)
- Secondary Variable (SV)
- Tertiary Variable (TV)
- Quaternary Variable (QV)

When using the transmitter with dual-sensor option in conjunction with the HART Tri-Loop, consider the configuration of the differential, average, first good temperatures, Sensor Drift Alert, and Hot Backup features (if applicable).

Note
The procedures are to be used when the sensors and transmitters are connected, powered, and functioning properly. Also, Field Communicator must be connected and communicating to the transmitter control loop. For communicator usage instructions, see Verify configuration using the Field Communicator.

2.13.1 Set the transmitter to burst mode

To set the transmitter to burst mode, follow the steps below with the Fast Key sequence.

Set the transmitter to burst mode using a Field Communicator

From the *HOME* screen, enter the Fast Key sequence.

	HART 5	HART 7
Device Dashboard Fast Keys	2, 2, 8, 4	2, 2, 8, 5

Set the transmitter to burst mode using AMS Device Manager

Procedure

1. Right click on the device and select **Configure**.
2. In the left navigation window select **Manual Setup**.
3. On the **HART** tab find the Burst Mode Configuration group box and fill in the necessary content.
4. Select **Apply** when complete.

2.13.2 Set process variable output order

To set the process variable output order, follow the steps in one of the methods outlined in Mapping the HART variables.

Note
Take careful note of the process variable output order. The HART® Tri-Loop must be configured to read the variables in the same order.

Special considerations

To initiate operation between a transmitter with dual-sensor option and the HART® Tri-Loop, consider the configuration of both the differential, average and first good temperatures, sensor drift alert, and Hot Backup features (if applicable).

Differential temperature measurement

To enable the differential temperature measurement feature of a dual-sensor operating in conjunction with the HART® Tri-Loop, adjust the range end points of the corresponding channel on the HART Tri-Loop to include zero. For example, if the secondary variable is to report the differential temperature, configure the transmitter accordingly (see Mapping the HART variables) and adjust the corresponding channel of the HART Tri-Loop so one range end point is negative and the other is positive.

Hot Backup

To enable the Hot Backup feature of a transmitter with dual-sensor option operating in conjunction with the HART Tri-Loop, ensure that the output units of the sensors are the same as the units of the HART Tri-Loop. Use any combination of RTDs or thermocouples as long as the units of both match the units of the HART Tri-Loop.

Using the Tri-Loop to detect sensor drift alert

The dual-sensor transmitter sets a failure flag (through HART) whenever a sensor failure occurs. If an analog warning is required, the HART Tri-Loop can be configured to produce an analog signal that can be interpreted by the control system as a sensor failure.

Use these steps to set up the HART Tri-Loop to transmit sensor failure alerts.

Procedure

1. Configure the dual-sensor transmitter variable map as shown:

Variable	Mapping
PV	Sensor 1 or sensor average
SV	Sensor 2
TV	Differential temperature
QV	As desired

2. Configure Channel 1 of the HART Tri-Loop as TV (differential temperature). If either sensor should fail, the differential temperature output will be +9999 or –9999 (high or low saturation), depending on the position of the Failure Mode Switch (see Setting the alarm switch).
3. Select temperature units for Channel 1 that match the differential temperature units of the transmitter.
4. Specify a range for the TV such as -148 to 212 °F (-100 to 100 °C). If the range is large, then a sensor drift of a few degrees will represent only a small percent of range. If Sensor 1 or Sensor 2 fails, the TV will be +9999 (high saturation) or –9999 (low saturation). In this example, zero is the midpoint of the TV range. If a ΔT of zero is set as the lower range limit (4 mA), then the output could saturate low if the reading from Sensor 2 exceeds the reading from Sensor 1. By placing a zero in the middle of the range, the output will normally stay near 12 mA, and the problem will be avoided.
5. Configure the DCS so that TV << –148 °F (–100 °C) or TV >> 212 °F (100 °C) indicates a sensor failure and, for example, TV ≤ 26.6 °F (–3 °C) or TV ≥ 37.4 °F (3 °C) indicates a drift alert. See Figure 2-26.

Figure 2-26: Tracking Sensor Drift and Sensor Failure with Differential Temperature

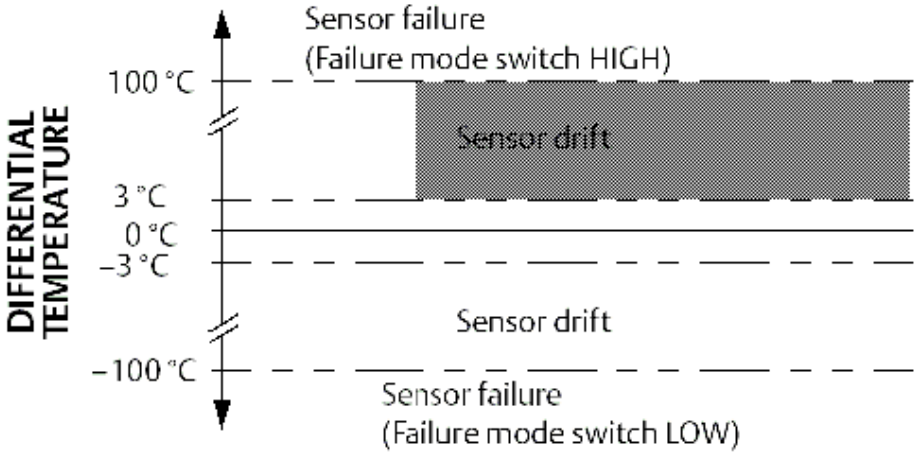

2.14 Transmitter security

2.14.1 Available security options

There are three security methods to utilize with the transmitter.

- Software security switch (write protect)
- HART lock
- LOI password

The write protect feature allows you to protect the transmitter data from accidental or unwarranted configuration changes. To enable the write protect feature, perform the following procedures.

Configure transmitter security using a Field Communicator

From the *HOME* screen, enter the Fast Key sequence.

Write Protect	2, 2, 9, 1
HART Lock	2, 2, 9, 2
LOI Password	2, 2, 9, 3

Configure transmitter security using AMS Device Manager

Procedure

1. Right click on the device and select the **Configure** menu.
2. In the left navigation pane select **Manual Setup** then select the **Security** tab.
   - All three parameters can be configured from this screen.
3. Select **Apply** when complete.

3 Hardware Installation

Note
Each transmitter is marked with a tag indicating the approvals. Install the transmitter according to all applicable installation codes, and approval and installation drawings (see Product Data Sheet). Verify the operating atmosphere of the transmitter is consistent with the hazardous location certifications. Once a device labeled with multiple approval types is installed, it should not be reinstalled using any of the other labeled approval types. To ensure this, the approval label should be permanently marked to distinguish the approval type(s) used.

3.1 Overview

The information in this section covers installation considerations for the Rosemount 644 Temperature Transmitter with HART® Protocol. A Quick Start Guide is shipped with every transmitter to describe recommended mounting and wiring procedures for initial installation. Dimensional drawings for transmitter mounting configurations are included in the Product Data Sheet.

3.2 Safety messages

Instructions and procedures in this section may require special precautions to ensure the safety of the personnel performing the operations. Refer to the following safety messages before performing an operation preceded by this symbol.

⚠ WARNING

Follow instruction

Failure to follow these installation guidelines could result in death or serious injury.

Ensure only qualified personnel perform the installation.

Explosion

Explosions could result in death or serious injury.

Do not remove the connection head cover in explosive atmospheres when the circuit is live.

Before connecting a handheld communicator in an explosive atmosphere, ensure that the instruments in the loop are installed in accordance with intrinsically safe or non-incendive field wiring practices.

Verify that the operating atmosphere of the transmitter is consistent with the appropriate hazardous locations certifications.

All connection head covers must be fully engaged to meet explosion-proof requirements.

⚠ WARNING

Process leaks

Process leaks could result in death or serious injury.

Do not remove the thermowell while in operation.
Install and tighten thermowells and sensors before applying pressure.

Electric shock

Electrical shock could cause death or serious injury.

Use extreme caution when making contact with the leads and terminals.

Physical access

Unauthorized personnel may potentially cause significant damage to and/or misconfiguration of end users' equipment. This could be intentional or unintentional and needs to be protected against.

Physical security is an important part of any security program and fundamental to protecting your system. Restrict physical access by unauthorized personnel to protect end users' assets. This is true for all systems used within the facility.

3.3 Considerations

3.3.1 General

Electrical temperature sensors such as RTDs and thermocouples produce low-level signals proportional to their sensed temperature. The transmitter converts the low-level sensor signal to a standard 4–20 mA dc or digital HART® signal that is relatively insensitive to lead length and electrical noise. This signal is then transmitted to the control room via two wires.

3.3.2 Commissioning

The transmitter can be commissioned before or after installation. It may be useful to commission it on the bench, before installation, to ensure proper operation and to become familiar with its functionality. Ensure the instruments in the loop are installed in accordance with intrinsically safe, or non-incendive field wiring practices.

3.3.3 Installation

Measurement accuracy depends upon proper installation of the transmitter. Mount the transmitter close to the process and use minimum wiring to achieve best accuracy. Keep in mind the need for easy access, personnel safety, practical field calibration, and a suitable transmitter environment. Install the transmitter to minimize vibration, shock, and temperature fluctuation.

3.3.4 Mechanical

Location

When choosing an installation location and position, take into account the need for access to the transmitter.

Special mounting

Special mounting hardware is available for mounting a Rosemount 644 Head Mount Transmitter to a DIN rail or assembling a new Rosemount 644 Head Mount to an existing threaded sensor connection head (former option code L1).

3.3.5 Electrical

Proper electrical installation is necessary to prevent errors due to sensor lead resistance and electrical noise. For best results, shielded cable should be used in electrically noisy environments.

Make wiring connections through the cable entry in the side of the housing. Provide adequate clearance for cover removal.

3.3.6 Environmental

The transmitter electronics module is permanently sealed within a plastic enclosure, resisting moisture and corrosive damage. Verify that the operating atmosphere of the transmitter is consistent with the appropriate hazardous locations certifications.

Temperature effects

The transmitter will operate within specifications for ambient temperatures between –40 and 185 °F (–40 °C and 85 °C). Heat from the process is transferred from the thermowell to the transmitter housing. If the expected process temperature is near or beyond specification limits, consider the use of additional thermowell lagging, an extension nipple, or a remote mounting configuration to isolate the transmitter from the process.

Figure 3-1 provides an example of the relationship between transmitter housing temperature rise and extension length.

Figure 3-1: Head Mount Transmitter Connection Head Temperature Rise vs. Extension Length

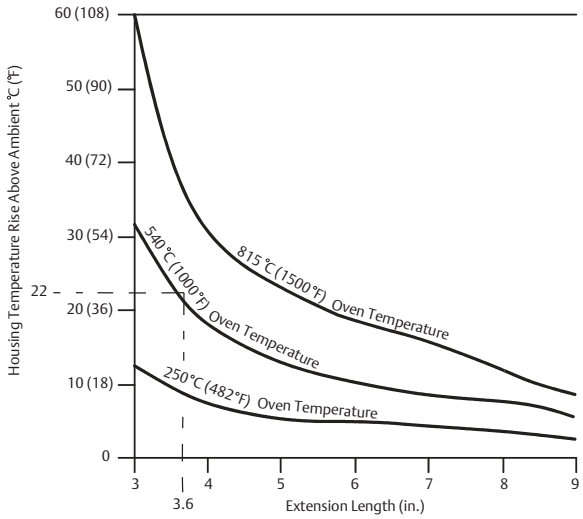

Example

The maximum permissible housing temperature rise (T) can be calculated by subtracting the maximum ambient temperature (A) from the transmitter's ambient temperature specification limit (S). For instance, if A = 40 °C.

T = S - A T = 85 °C – 40 °C T = 45 °C

For a process temperature of 540 °C (1004 °F), an extension length of 3.6-in. (91.4 mm) yields a housing temperature rise (R) of 22 °C (72 °F), providing a safety margin of 23 °C (73 °F). A 6.0-in. (152.4 mm) extension length (R = 10 °C [50 °F]) offers a higher safety margin (35 °C [95 °F]) and reduces temperature-effect errors but would probably require extra transmitter support. Gauge the requirements for individual applications along this scale. If a thermowell with lagging is used, the extension length may be reduced by the length of the lagging.

3.4 Installation procedures

Figure 3-2: Installation Flowchart

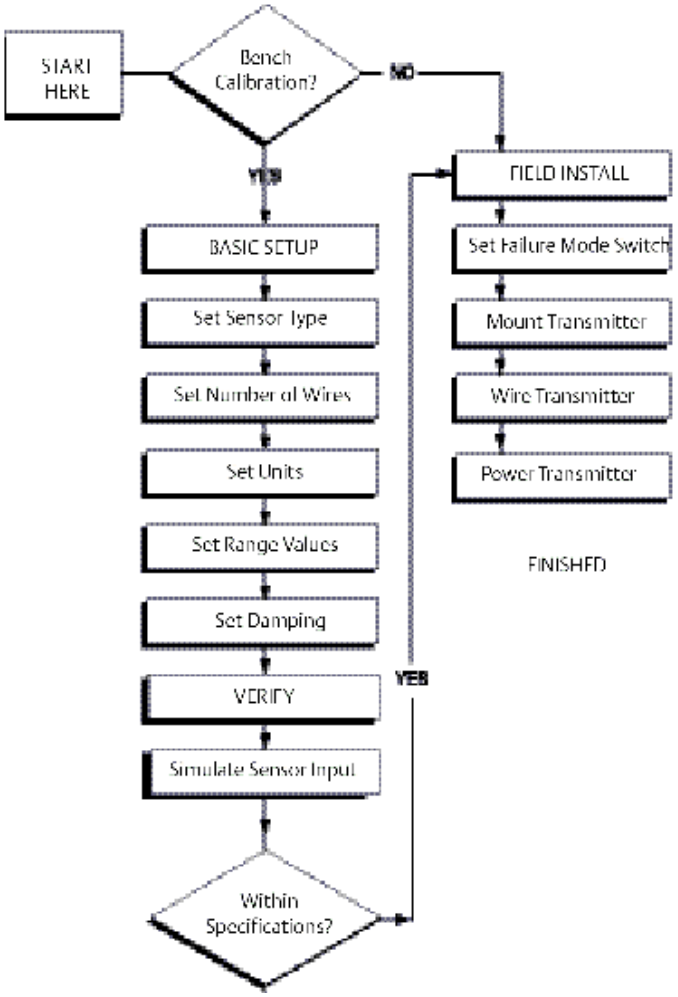

3.4.1 Setting the alarm switch

Verify the alarm switch is set to the desired position before putting the device into operation to ensure correct function in the instance of a failure.

Setting the alarm switch without an LCD display

Procedure

1. Set the loop to manual (if applicable) and disconnect the power.
2. Remove the housing cover.
3. Set the physical hardware alarm switch to the desired position. H indicates High, L indicates Low. Then reattach the housing cover. See Figure 3-3 for alarm switch location.

4. Apply power and set the loop to automatic control.

Figure 3-3: Failure Switch Location

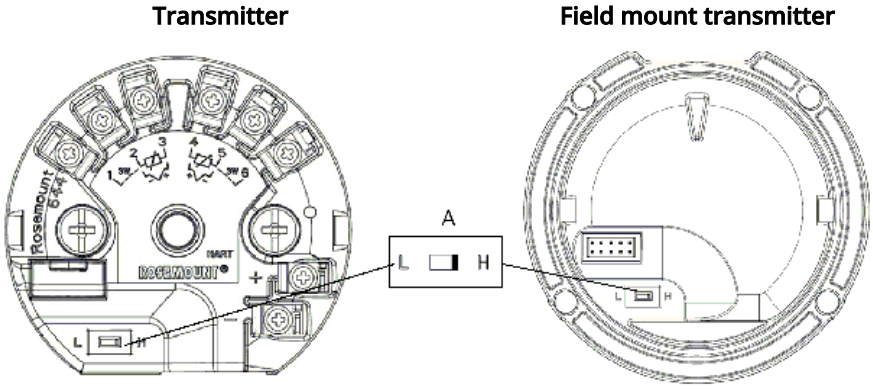

A. Alarm switch

Note
If using an LCD Display or LOI, first remove the display by detaching it from the top of the device, set the switch to the desired position and reattach the display. See Figure 3-4 for proper display orientation.

Figure 3-4: Display Connection

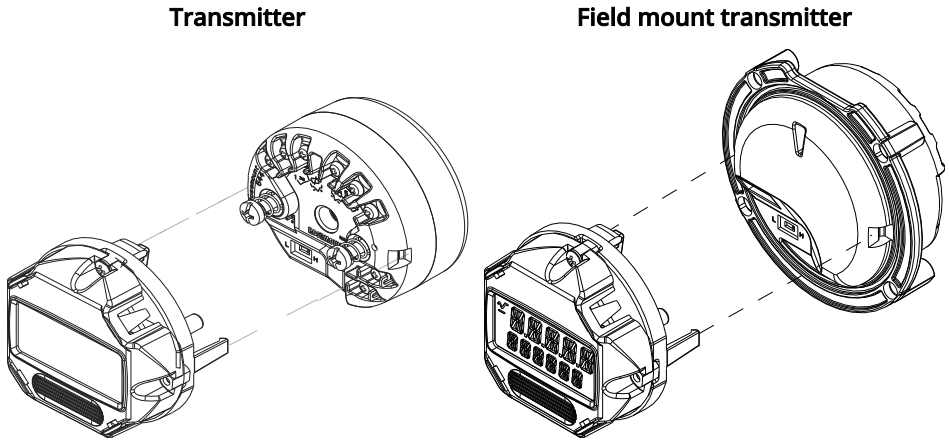

3.4.2 Mount the transmitter

Mount the transmitter at a high point in the conduit run to prevent moisture from draining into the transmitter housing.

The Rosemount 644 Head Mount installs:

- In a connection head or universal head mounted directly on a sensor assembly.
- Apart from a sensor assembly using a universal head.
- To a DIN rail using an optional mounting clip.

The Rosemount 644 Field Mount installs in a field mount housing, directly mounted on a sensor or apart from a sensor assembly using an optional bracket.

The Rosemount 644 Rail Mount attaches directly to a wall or to a DIN rail.

Mounting a Rosemount 644 Head Mount to a DIN rail

To attach a head mount transmitter to a DIN rail, assemble the appropriate rail mounting kit (part number 00644-5301-0010) to the transmitter as shown in Figure 3-5. Follow the procedure under Field mount transmitter with threaded sensor installation.

Figure 3-5: Assembling Rail Clip Hardware to a Rosemount 644 Transmitter

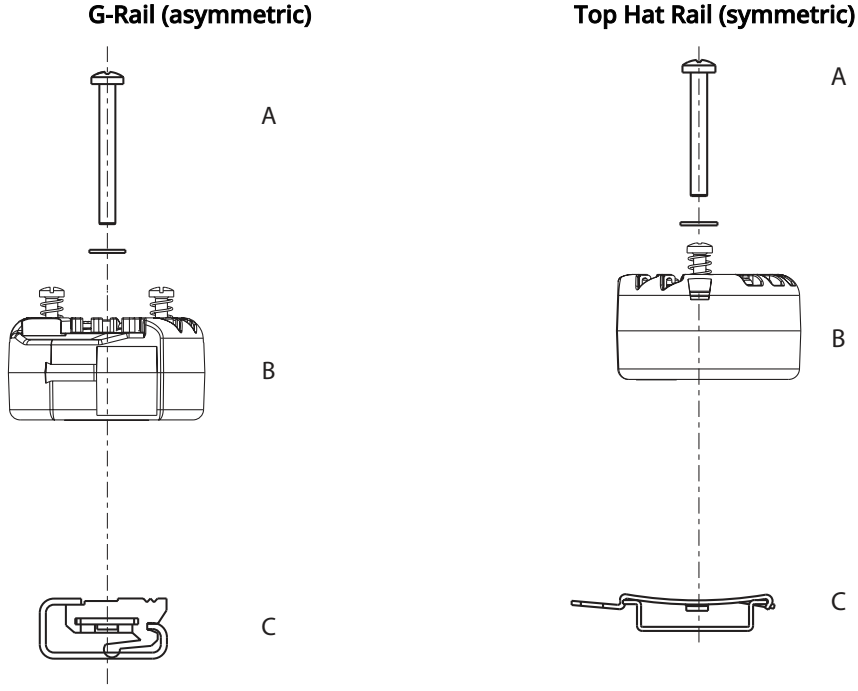

A. Mounting hardware
B. Transmitter
C. Rail clip

Note
Kit (part number 00644-5301-0010) includes mounting hardware and both types of rail kits.

3.4.3 Install the device

Head mount transmitter with DIN plate style sensor installation

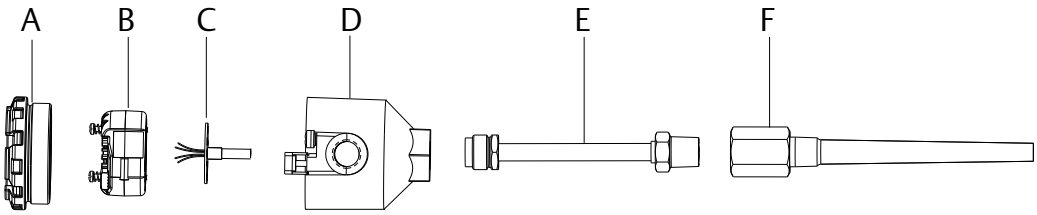

A. Connection head cover

B. Transmitter mounting screws

C. Integral mount sensor with flying leads

D. Connection head

E. Extension

F. Thermowell

Procedure

1. Attach the thermowell to the pipe or process container wall. Install and tighten the thermowell before applying process pressure.
2. Verify the transmitter failure mode switch position.
3. Assemble the transmitter to the sensor. Push the transmitter mounting screws through the sensor mounting plate.

   Note
   If using a threaded type sensor with a connection head, reference steps 1-6 below in Head mount transmitter with threaded sensor installation.

4. Wire the sensor to the transmitter (see Wiring and powering the transmitter).
5. Insert the transmitter-sensor assembly into the connection head. Thread the transmitter mounting screw into the connection head mounting holes. Assemble the extension to the connection head by tightening the threaded connections of the extension to the housing. Insert the assembly into the thermowell and tighten the threaded connections.
6. If using a cable gland for power wiring, properly attach the cable gland to a housing conduit entry.
7. Insert the shielded cable leads into the connection head through the conduit entry.

8. Connect the shielded power cable leads to the transmitter power terminals. Avoid contact with sensor leads and sensor connections. Connect and tighten the cable gland.
9. Install and tighten the connection head cover. Enclosure covers must be fully engaged to meet explosion-proof requirements.

Head mount transmitter with threaded sensor installation

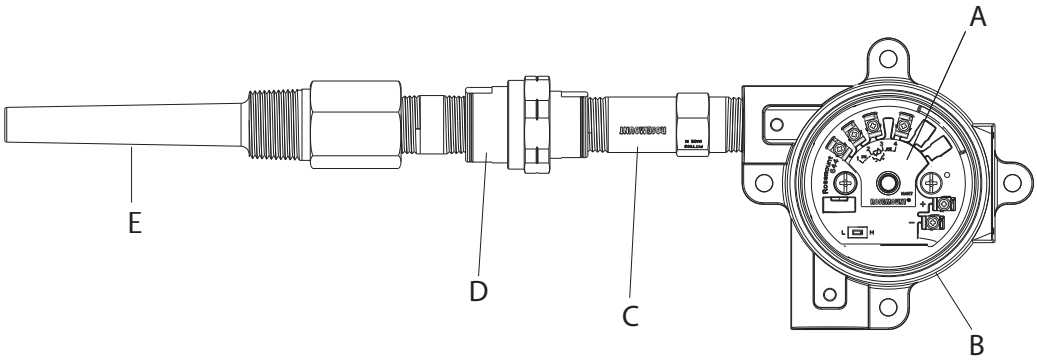

A. Rosemount 644 Transmitter

B. Universal junction box

C. Threaded style sensor

D. Extension

E. Threaded thermowell

Procedure

1. Attach the thermowell to the pipe or process container wall. Install and tighten thermowells before applying process pressure.
2. Attach necessary extension nipples and adapters to the thermowell. Seal the nipple and adapter threads with silicone tape.
3. Screw the sensor into the thermowell. Install drain seals if required for severe environments or to satisfy code requirements.
4. Verify the transmitter failure mode switch is in the desired position.
5. To verify the correct installation of Integral Transient Protection (option code T1) on the device, confirm the following steps have been completed:
   a) Ensure the transient protector unit is firmly connected to the transmitter puck assembly.
   b) Ensure the transient protector power leads are adequately secured under the transmitter power terminal screws.
   c) Verify the transient protector's ground wire is secured to the internal ground screw found within the universal head.

Note
The transient protector requires the use of an enclosure of at least 3.5-in. (89 mm) in diameter.

6. Pull the sensor wiring leads through the universal head and transmitter. Mount the transmitter in the universal head by threading the transmitter mounting screws into the universal head mounting holes.
7. Seal adapter threads with thread sealant.
8. Pull the field wiring leads through the conduit into the universal head. Wire the sensor and power leads to the transmitter (see Wiring and powering the transmitter). Avoid contact with other terminals.
9. Install and tighten the universal head cover. Enclosure covers must be fully engaged to meet explosion-proof requirements.

Field mount transmitter with threaded sensor installation

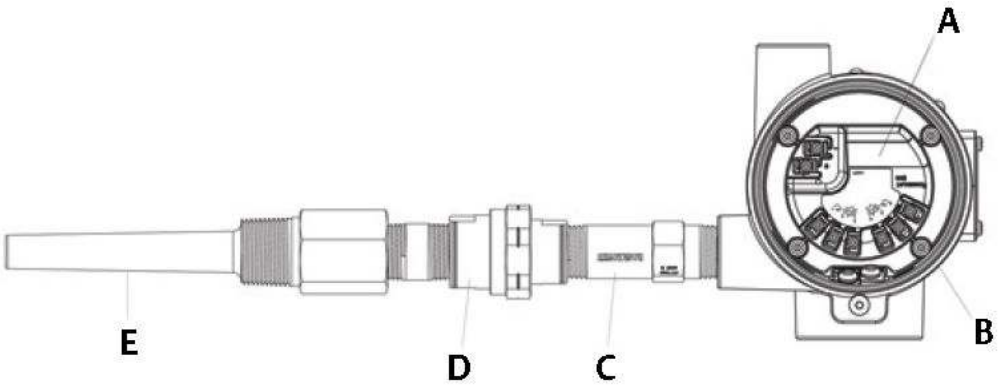

A. Rosemount 644 Field Mount

B. Field mount housing

C. Threaded style sensor

D. Extension

E. Threaded thermowell

Procedure

1. Attach the thermowell to the pipe or process container wall. Install and tighten thermowells before applying process pressure.
2. Attach necessary extension nipples and adapters to the thermowell.
3. Seal the nipple and adapter threads with silicone tape.
4. Screw the sensor into the thermowell. Install drain seals if required for severe environments or to satisfy code requirements.
5. Verify the transmitter failure mode switch is in the desired position.
6. Mount the transmitter-sensor assembly into the thermowell, or remote mount if desired.
7. Seal adapter threads with silicone tape.
8. Pull the field wiring leads through the conduit into the field mount housing. Wire the sensor and power leads to the transmitter. Avoid contact with other terminals.

9. Install and tighten the covers of two compartments. Enclosure covers must be fully engaged to meet explosion-proof requirements.

Rail mount transmitter and sensor

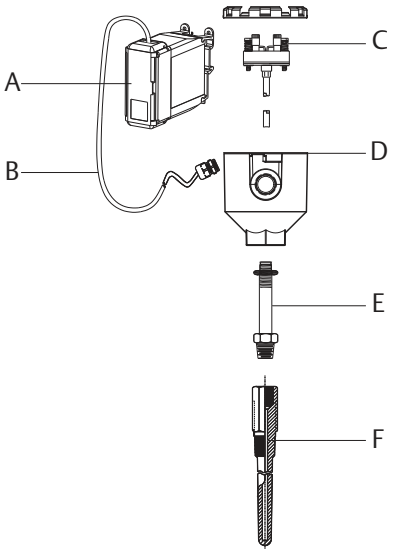

A. Rail mount transmitter

B. Sensor leads with cable glands

C. Integral mount sensor with terminal block

D. Connection head

E. Standard extension

F. Threaded thermowell

Procedure

1. Attach the transmitter to a suitable rail or panel.
2. Attach the thermowell to the pipe or process container wall. Install and tighten the thermowell, according to plant standards, before applying pressure.
3. Attach the sensor to the connection head and mount the entire assembly to the thermowell.
4. Attach and connect sufficient lengths of sensor lead wire from the connection head to the sensor terminal block.
5. Tighten the connection head cover. Enclosure covers must be fully engaged to meet explosion-proof requirements.
6. Run sensor lead wires from the sensor assembly to the transmitter.
7. Verify the transmitter failure mode switch.
8. Attach the sensor wires to the transmitter.

Rail mount transmitter with threaded sensor

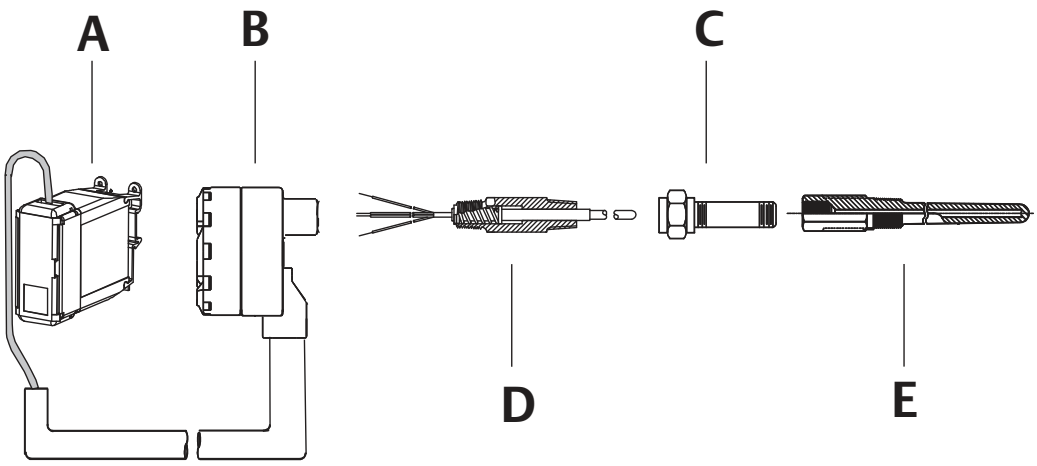

A. Rail mount transmitter

B. Threaded sensor connection head

C. Standard extension

D. Threaded style sensor

E. Threaded thermowell

Procedure

1. Attach the transmitter to a suitable rail or panel.
2. Attach the thermowell to the pipe or process container wall. Install and tighten the thermowell before applying pressure.
3. Attach necessary extension nipples and adapters. Seal the nipple and adapter threads with thread sealant.
4. Screw the sensor into the thermowell. Install drain seals if required for severe environments or to satisfy code requirements.
5. Screw the connection head to the sensor.
6. Attach the sensor lead wires to the connection head terminals.
7. Attach additional sensor lead wires from the connection head to the transmitter.
8. Attach and tighten the connection head cover. Enclosure covers must be fully engaged to meet explosion-proof requirements.
9. Set the transmitter failure mode switch.
10. Attach the sensor wires to the transmitter.

3.4.4 Multichannel installations

In a HART® installation, several transmitters can be connected to a single master power supply, as shown in Figure 3-6. In this case, the system may be grounded only at the negative power supply terminal. In multichannel installations where several transmitters depend on one power supply and the loss of all transmitters would cause operational problems, consider an uninterrupted power supply or a back-up battery. The diodes shown in Figure 3-6 prevent unwanted charging or discharging of the back-up battery.

Figure 3-6: Multichannel Installations

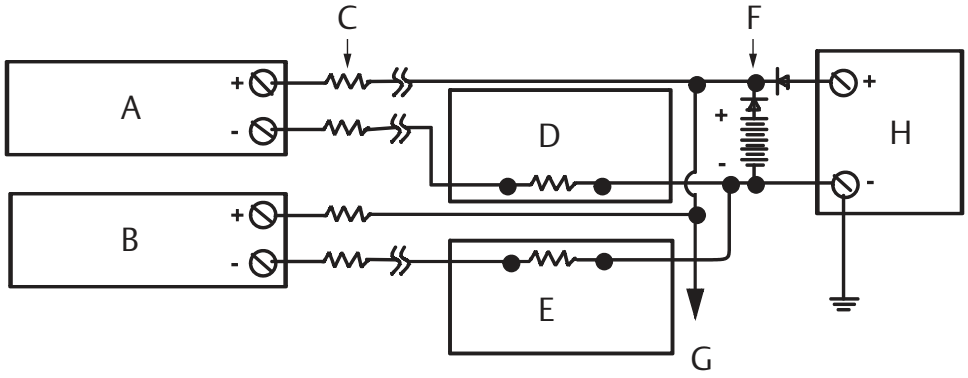

Between 250 Ω and 1100 Ω if no load resistor.

A. *Transmitter no. 1*
B. *Transmitter no. 2*
C. R_{Lead}
D. *Readout or controller no. 1*
E. *Readout or controller no. 2*
F. *Backup battery*
G. *To additional transmitters*
H. *DC power supply*

3.4.5 LCD display installation

The LCD display provides local indication of the transmitter output and abbreviated diagnostic messages governing transmitter operation. Transmitters ordered with the LCD display are shipped with the meter installed. After-market installation of the meter can be performed. After-market installation requires the meter kit, which includes:

- LCD display assembly (includes LCD display, meter spacer, and two screws)
- Meter cover with O-ring in place

Figure 3-7: Display Connection

Transmitter

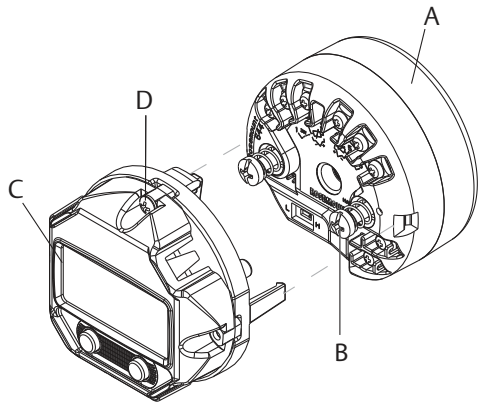

A. Rosemount 644 Transmitter
B. Mounting screw and springs
C. LCD display
D. LCD rotation screws

Field mount transmitter

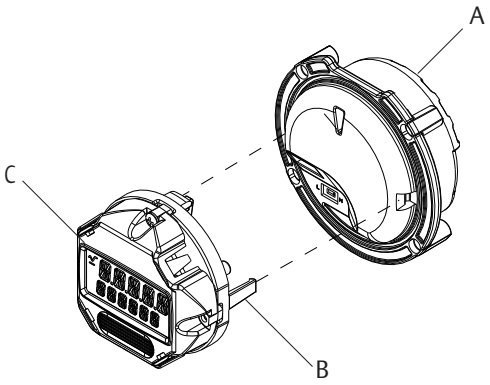

A. Rosemount 644 Field Mount
B. LCD rotation screws
C. LCD display

Procedure

1. If the transmitter is installed in a loop, secure the loop and disconnect the power. If the transmitter is installed in an enclosure, remove the cover from the enclosure.
2. Decide meter orientation (the meter can be rotated in 90-degree increments). To change meter orientation, remove the screws located above and below the display screen. Lift the meter off the meter spacer. Rotate the display top and re-insert it in the location that will result in the desired viewing orientation.
3. Reattach the meter to the meter spacer using the screws. If the meter was rotated 90 degrees from its original position, it will be necessary to remove the screws from their original holes and re-insert them in the adjacent screws holes.
4. Line up the connector with the pin socket and push the meter into the transmitter until it snaps into place.

5. Attach the meter cover. The cover must be fully engaged to meet explosion-proof requirements.
6. Use a Field Communicator, AMS Device Manager software tool to configure the meter to the desired display.

Note

Observe the following LCD display temperature limits:

- Operating: –40 to 175 °F (–40 to 80 °C)
- Storage: –50 to 185 °F (–45 to 85 °C)

4 Electrical Installation

4.1 Overview

The information in this section covers installation considerations for the Rosemount 644 Temperature Transmitter. A Quick Start Guide is shipped with every transmitter to describe mounting, wiring, and basic hardware installation procedures for initial installation.

4.2 Safety messages

Instructions and procedures in this section may require special precautions to ensure the safety of the personnel performing the operations. Refer to the following safety messages before performing an operation preceded by this symbol.

⚠ WARNING

Follow instruction

Failure to follow these installation guidelines could result in death or serious injury.

Ensure only qualified personnel perform the installation.

Explosion

Explosions could result in death or serious injury.

Do not remove the connection head cover in explosive atmospheres when the circuit is live.

Before connecting a handheld communicator in an explosive atmosphere, ensure that the instruments in the loop are installed in accordance with intrinsically safe or non-incendive field wiring practices.

Verify that the operating atmosphere of the transmitter is consistent with the appropriate hazardous locations certifications.

All connection head covers must be fully engaged to meet explosion-proof requirements.

Process leaks

Process leaks could result in death or serious injury.

Do not remove the thermowell while in operation.

Install and tighten thermowells and sensors before applying pressure.

Electric shock

Electrical shock could cause death or serious injury.

Use extreme caution when making contact with the leads and terminals.

⚠ WARNING

Physical access

Unauthorized personnel may potentially cause significant damage to and/or misconfiguration of end users' equipment. This could be intentional or unintentional and needs to be protected against.

Physical security is an important part of any security program and fundamental to protecting your system. Restrict physical access by unauthorized personnel to protect end users' assets. This is true for all systems used within the facility.

4.3 Wiring and powering the transmitter

All power to the transmitter is supplied over the signal wiring. Use ordinary copper wire of sufficient size to ensure the voltage across the transmitter power terminals does not drop below 12.0 Vdc.

If the sensor is installed in a high-voltage environment and a fault condition or installation error occurs, the sensor leads and transmitter terminals could carry lethal voltages. Use extreme caution when making contact with the leads and terminals.

Note
Do not apply high voltage (e.g., ac line voltage) to the transmitter terminals. Abnormally high voltage can damage the unit. (Sensor and transmitter power terminals are rated to 42.4 Vdc. A constant 42.4 volts across the sensor terminals may damage the unit.)

For multichannel HART installations, the transmitters will accept inputs from a variety of RTD and thermocouple types. Refer to Figure 2-7 when making sensor connections.

The sensor wiring diagram is located on the device's top label below the terminal screws. See Figure 4-1 and Sensor wiring for where to find and how to correctly wire all sensor types to the transmitter.

Figure 4-1: Wiring Diagram Location

Head mount transmitter

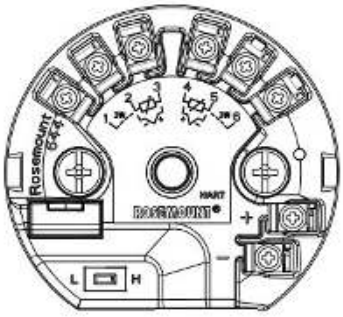

Field mount transmitter

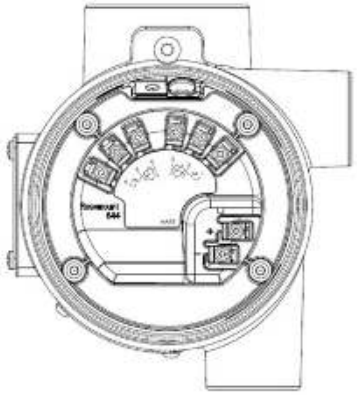

4.3.1 Sensor connections

The transmitter is compatible with a number of RTD and thermocouple sensor types. Sensor wiring shows the correct input connections to the sensor terminals on the transmitter. To ensure a proper sensor connection, anchor the sensor lead wires into the appropriate captive terminals and tighten the screws.

Sensor wiring

Emerson provides a 4-wire sensors for all single element RTDs.

You can use these RTDs in 3-wire configurations by leaving the unneeded leads disconnected and insulated with electrical tape.

Figure 4-2: HART Head Mount and Field Mount

Single input wiring

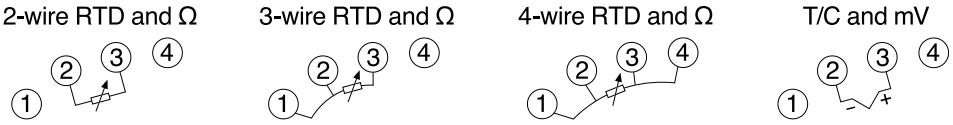

Dual input wiring

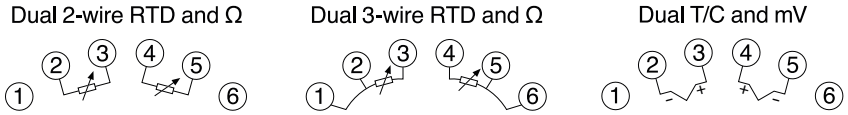

Figure 4-3: HART Rail Mount and FOUNDATION Fieldbus/PROFIBUS

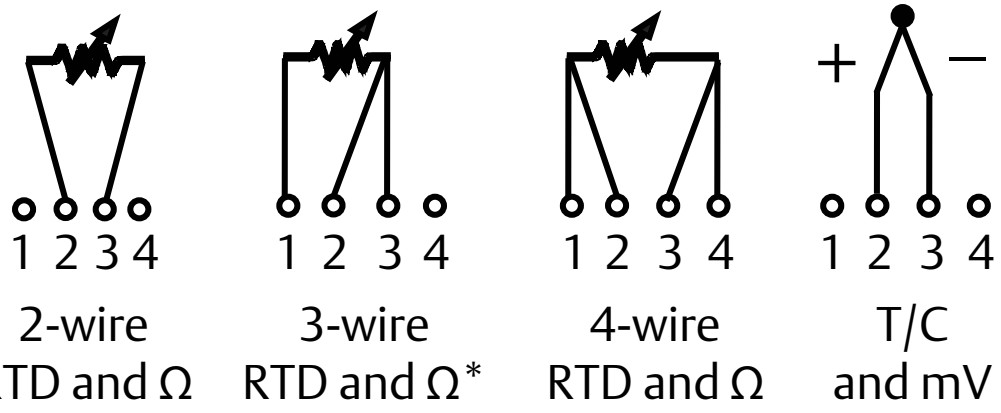

Thermocouple or millivolt inputs

The thermocouple can be connected directly to the transmitter. Use appropriate thermocouple extension wire if mounting the transmitter remotely from the sensor. Make millivolt inputs connections with copper wire. Use shielding for long runs of wire.

RTD or Ohm inputs

The transmitters will accept a variety of RTD configurations, including 2-, 3- or 4-wire. If the transmitter is mounted remotely from a 3- or 4-wire RTD, it will operate within specifications, without recalibration, for lead wire resistances of up to 60 ohms per lead (equivalent to 6,000 feet of 20 AWG wire). In this case, the leads between the RTD and transmitter should be shielded. If using only two leads, both RTD leads are in series with the sensor element, so significant errors can occur if the lead lengths exceed three feet of 20 AWG wire (approximately 0.05 °C/ft). For longer runs, attach a third or fourth lead as described above.

Sensor lead wire resistance effect– RTD input

When using a 4-wire RTD, the effect of lead resistance is eliminated and has no impact on accuracy. However, a 3-wire sensor will not fully cancel lead resistance error because it cannot compensate for imbalances in resistance between the lead wires. Using the same type of wire on all three lead wires will make a 3-wire RTD installation as accurate as possible. A 2-wire sensor will produce the largest error because it directly adds the lead wire resistance to the sensor resistance. For 2- and 3-wire RTDs, an additional lead wire resistance error is induced with ambient temperature variations. The table and the examples shown below help quantify these errors.

Note
For HART transmitters, the use of two grounded thermocouples with a dual option transmitter is not recommended. For applications in which the use of two thermocouples is desired, connect either two ungrounded thermocouples, one grounded and one ungrounded thermocouple, or one dual element thermocouple.

4.3.2 Power the transmitter

Procedure

1. An external power supply is required to operate the transmitter.
2. Remove the housing cover (if applicable).
3. Connect the positive power lead to the "+" terminal. Connect the negative power lead to the "–" terminal.
   - If a transient protector is being used, the power leads will now be connected to the top of the transient protector unit. See the transient label for indication of "+" and "-" terminal connections.
4. Tighten the terminal screws. When tightening the sensor and power wires, the maximum torque is 6.5 in-lb (0.73 N-m).
5. Reattach and tighten the cover (if applicable).
6. Apply power (12–42 Vdc).

Figure 4-4: Powering the Transmitter for Bench Configuration

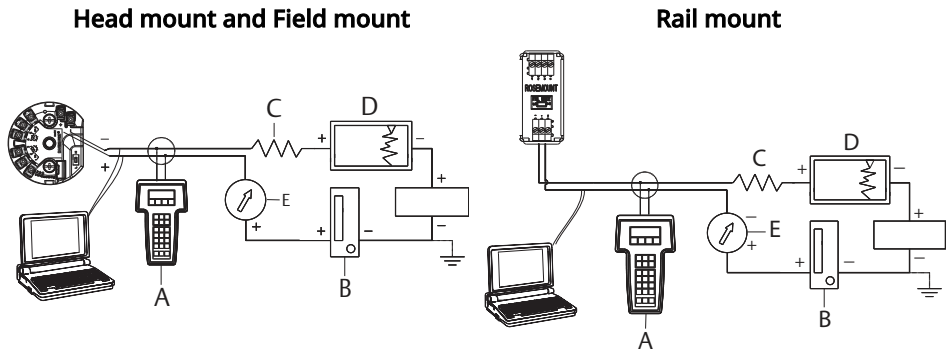

A. Field communicator
B. Power supply
C. 248 Ω ≤ RL ≤ 1100 Ω
D. Recorder (optional)
E. Ammeter (optional)

Note

- Signal loop may be grounded at any point or left ungrounded.
- A Field Communicator may be connected at any termination point in the signal loop. The signal loop must have between 250 and 1100 ohms load for communications.
- Max torque is 6 in-lb (0/7 N-m).

Load limitation

The power required across the transmitter power terminals is 12 to 42.4 Vdc (the power terminals are rated to 42.4 Vdc). To prevent damaging the transmitter, do not allow terminal voltage to drop below 12.0 Vdc when changing the configuration parameters.

4.3.3 Ground the transmitter

Sensor shielding

The currents in the leads induced by electromagnetic interference can be reduced by shielding. Shielding carries the current to ground and away from the leads and electronics. If the ends of the shields are adequately grounded, only a small amount of current will actually enter the transmitter. If the ends of the shield are left ungrounded, voltage is created between the shield and the transmitter housing and also between the shield and earth at the element end. The transmitter may not be able to compensate for this voltage, causing it to lose communication and/or go into alarm. Instead of the shield carrying the currents away from the transmitter, the currents will now flow through the sensor leads into the transmitter circuitry where it will interfere with the circuit operation.

Shielding recommendations

The following are recommended practices from API Standard 552 (Transmission Standard) section 20.7, and from field and laboratory testing. If more than one recommendation is given for a sensor type, start with the first technique shown or the technique that is recommended for the facility by its installation drawings. If the technique does not eliminate the transmitter alarms, try another technique. If all of the techniques do not eliminate or prevent the transmitter alarms because of high EMI, contact an Emerson representative.

To ensure proper grounding, it is important that the instrument cable shield be:

- Trimmed close and insulated from touching the transmitter housing
- Connected to the next shield if cable is routed through a junction box
- Connected to a good earth ground at the power supply end

Ungrounded thermocouple, mV, and RTD/Ohm inputs

Each process installation has different requirements for grounding. Use the grounding options recommended by the facility for the specific sensor type, or begin with grounding option 1 (the most common).

Ground the transmitter: option 1

Procedure

1. Connect sensor wiring shield to the transmitter housing.
2. Ensure the sensor shield is electrically isolated from surrounding fixtures that may be grounded.
3. Ground signal wiring shield at the power supply end.

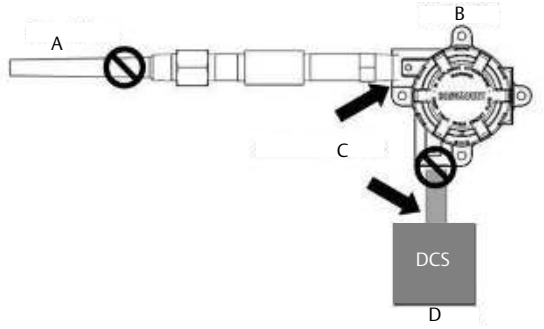

A. Sensor wires

B. Transmitter

C. Shield ground point

D. 4-20 mA loop

Ground the transmitter: option 2

Procedure

1. Connect signal wiring shield to the sensor wiring shield.
2. Ensure the two shields are tied together and electrically isolated from the transmitter housing.
3. Ground shield at the power supply end only.
4. Ensure the sensor shield is electrically isolated from the surrounding grounded fixtures.

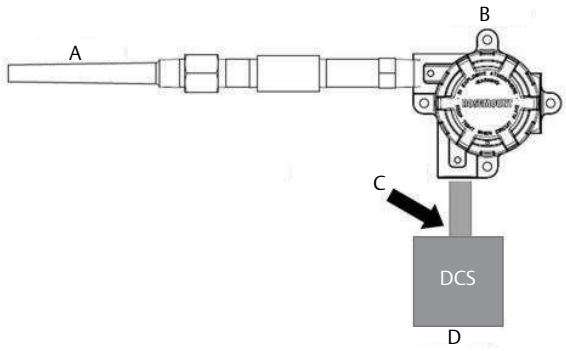

A. Sensor wires

B. Transmitter

C. Shield ground point

D. 4-20 mA loop

Note
Connect shields together, electrically isolated from the transmitter.

Ground the transmitter: option 3

Procedure

1. Ground sensor wiring shield at the sensor if possible.
2. Ensure the sensor wiring and signal wiring shields are electrically isolated from the transmitter housing.
3. Do not connect the signal wiring shield to the sensor wiring shield.
4. Ground the signal wiring shield at the power supply end.

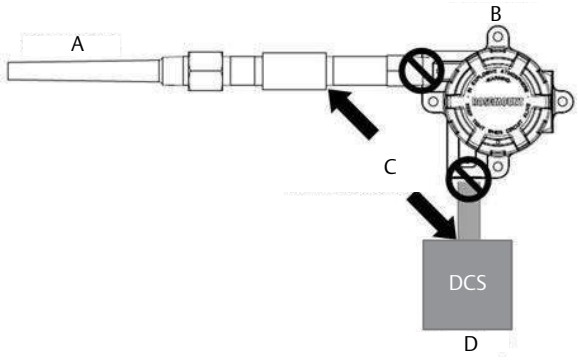

A. Sensor wires

B. Transmitter

C. Shield ground point

D. 4-20 mA loop

Grounded thermocouple inputs

Ground the transmitter: option 4

Procedure

1. Ground sensor wiring shield at the sensor.
2. Ensure the sensor wiring and signal wiring shields are electrically isolated from the transmitter housing.
3. Do not connect the signal wiring shield to the sensor wiring shield.
4. Ground signal wiring shield at the power supply end.

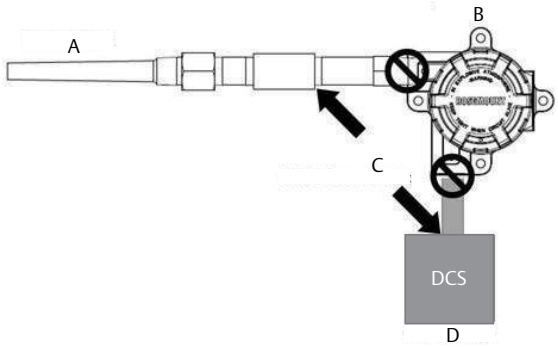

A. Sensor wires

B. Transmitter

C. Shield ground point

D. 4–20 mA loop

4.3.4 Wiring with a Rosemount 333 HART Tri-Loop (HART/4–20 mA only)

Use the dual-sensor option transmitter that is operating with two sensors in conjunction with a Rosemount 333 HART® Tri-Loop HART-to-Analog Signal Converter to acquire an independent 4–20 mA analog output signal for each sensor input. The transmitter can be configured to output four of the six following digital process variables:

- Sensor 1
- Sensor 2
- Differential temperature
- Average temperature
- First good temperature
- Transmitter terminal temperature

The HART Tri-Loop reads the digital signal and outputs any or all of these variables into as many as three separate 4–20 mA analog channels. Refer to Figure 2-7 for basic installation information. Refer to the Rosemount 333 HART Tri-Loop HART-to-Analog Signal Converter Reference Manual for complete installation information.

Power supply

An external power supply is required to operate the transmitter and is not included. The input voltage range of the transmitter is 12–42.4 Vdc. This is the power required across the transmitter power terminals. The power terminals are rated to 42.4 Vdc. With 250 ohms of resistance in the loop, the transmitter requires a minimum of 18.1 Vdc for communication.

The power supplied to the transmitter is determined by the total loop resistance and should not drop below the lift-off voltage. The lift-off voltage is the minimum supply voltage required for any given total loop resistance. If the power drops below the lift-off voltage while the transmitter is being configured, the transmitter may output incorrect information.

The DC power supply should provide power with less than two percent ripple. The total resistance load is the sum of the resistance of the signal leads and the load resistance of any controller, indicator, or related piece of equipment in the loop. Note that the resistance of intrinsic safety barriers, if used, must be included.

Note
Permanent damage to the transmitter could result if the voltage drops below 12.0 Vdc at the power terminals, when changing transmitter configuration parameters.

Figure 4-5: Load Limits

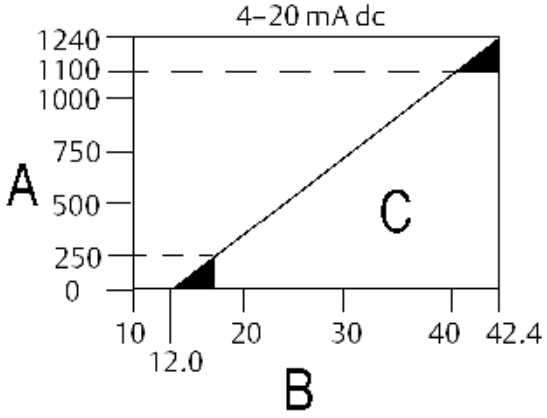

Maximum Load = 40.8 × (Supply voltage - 12.0)

A. Load (ohms)
B. Supply voltage (V_{dc})
C. Operating region

5 Operation and Maintenance

5.1 Overview

This section contains information on calibrating Rosemount 644 Temperature Transmitter. Field Communicator, AMS Device Manager, and Local Operator Interface (LOI) instructions are given to perform all functions.

5.2 Safety messages

Read this manual before working with the product. For personal and system safety, and for optimum product performance, ensure you thoroughly understand the contents before installing, using, or maintaining this product.

⚠ WARNING

Follow instructions

Failure to follow these installation guidelines could result in death or serious injury.

Ensure only qualified personnel perform the installation.

Explosions

Explosions could result in death or serious injury.

Installation of the transmitters in a hazardous environment must be in accordance with the appropriate local, national, and international standards, codes, and practices. Please review the Product Certifications section for any restrictions associated with a safe installation.

Do not remove the connection head cover in explosive atmospheres when the circuit is live.

Before connecting a handheld communicator in an explosive atmosphere, ensure the instruments are installed in accordance with intrinsically safe or non-incendive field wiring practices.Verify the operating atmosphere of the transmitter is consistent with the appropriate hazardous locations certifications.

All connection head covers must be fully engaged to meet explosion-proof requirements.

Process leaks

Process leaks could result in death or serious injury.

Do not remove the thermowell while in operation.

Install and tighten thermowells and sensors before applying pressure.

⚠ WARNING

Electrical shock

Electrical shock could cause death or serious injury.

Avoid contact with the leads and terminals. High voltage that may be present on leads can cause electrical shock.

The products described in this document are NOT designed for nuclear-qualified applications.

Using non-nuclear qualified products in applications that require nuclear-qualified hardware or products may cause inaccurate readings.

For information on Rosemount nuclear-qualified products, contact your local Emerson Sales Representative.

Physical access

Unauthorized personnel may potentially cause significant damage to and/or misconfiguration of end users' equipment. This could be intentional or unintentional and needs to be protected against.

Physical security is an important part of any security program and fundamental to protecting your system. Restrict physical access by unauthorized personnel to protect end users' assets. This is true for all systems used within the facility.

⚠ CAUTION

Conduit/cable entries

The conduit/cable entries in the transmitter housing use a ½–14 NPT thread form.

When installing in a hazardous location, use only appropriately listed or Ex certified plugs, glands, or adapters in cable/conduit entries.

Unless otherwise marked, the conduit/cable entries in the housing enclosure use a ½–14 NPT form. Only use plugs, adapters, glands, or conduit with a compatible thread form when closing these entries.

Unless marked, the conduit/cable entries in the transmitter housing use a ½–14 NPT thread form. Entries marked "M20" are M20 × 1.5 thread form. On devices with multiple conduit entries, all entries will have the same thread form. Only use plugs, adapters, glands, or conduit with a compatible thread form when closing these entries.

Only use plugs, adapters, glands, or conduit with a compatible thread form when closing these entries.

5.3 Calibration overview

Calibrating the transmitter increases the measurement precision by allowing corrections to be made to the factory-stored characterization curve by digitally altering the transmitter's interpretation of the sensor input.

To understand calibration, it is necessary to understand that smart transmitters operate differently from analog transmitters. An important difference is that smart transmitters are factory-characterized, meaning that they are shipped with a standard sensor curve stored in the transmitter firmware. In operation, the transmitter uses this information to produce a process variable output, in engineering units, dependent on the sensor input.

Calibration of the transmitter may include the following procedures:

- Sensor Input Trim: digitally alter the transmitter's interpretation of the input signal.
- Transmitter-Sensor Matching: generates a special custom curve to match that specific sensor curve, as derived from the Callendar-Van Dusen constants.
- Output Trim: calibrates the transmitter to a 4–20 mA reference scale.
- Scaled Output Trim: calibrates the transmitter to a user-selectable reference scale.

5.3.1 Trimming

The trim functions should not be confused with the rerange functions. Although the re-range command matches a sensor input to a 4–20 mA output—as in conventional calibration—it does not affect the transmitter's interpretation of the input.

One or more of the trim functions may be used when calibrating. The trim functions are as follows:

- Sensor input trim
- Transmitter-sensor matching
- Output trim
- Output scaled trim

5.4 Sensor input trim

The sensor trim command allows for alteration of the transmitter's interpretation of the input signal. The sensor trim command trims, in engineering (°F, °C, °R, K) or raw (ohms, mV) units, the combined sensor and transmitter system to a site standard using a known temperature source. Sensor trim is suitable for validation procedures or for applications that require profiling the sensor and transmitter together.

Perform a sensor trim if the transmitter's digital value for the primary variable does not match the plant's standard calibration equipment. The sensor trim function calibrates the sensor to the transmitter in temperature units or raw units. Unless the site-standard input source is NIST-traceable, the trim functions will not maintain the NIST-traceability of your system.

Figure 5-1: Trim

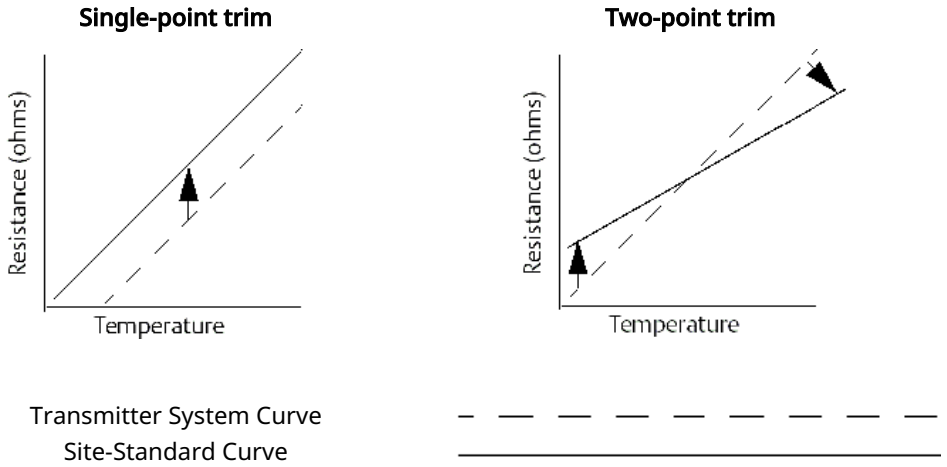

5.4.1 Application: Linear offset (single-point trim solution)

Procedure

1. Connect sensor to transmitter. Place sensor in bath between range points.
2. Enter known bath temperature using the Field Communicator.

5.4.2 Application: Linear offset and slope correction (two-point trim)

Procedure

1. Connect sensor to transmitter. Place sensor in bath at low range point.

2. Enter known bath temperature using the Field Communicator.
3. Repeat at high range point.

Perform a sensor trim using a Field Communicator

Procedure

1. Connect the calibration device or sensor to the transmitter. (If using an active calibrator, see Active calibrator and EMF compensation).
2. Connect the communicator to the transmitter loop.
3. From the *HOME* screen, enter the Fast Key sequence.

Device Dashboard Fast Keys	3, 4, 4, 1

   The communicator will display “Are you using an active calibrator?”
4. Select **No** if a sensor is connected to the transmitter
5. Select **Yes** if using a calibration device. By selecting Yes, the transmitter will switch into active calibration mode (see Active calibrator and EMF compensation). This is critical if the calibrator requires constant sensor current for calibration. If using a calibration device that can accept pulsed current, select **No**.

Perform a sensor trim using AMS Device Manager

Procedure

1. Right click on the device and select **Overview**.
2. On the main Overview tab, select the **Calibrate Sensor(s)** button near the bottom of the window.
3. Follow the screen prompts through the Sensor Trimming process.

Perform a sensor trim using LOI

Reference the below image for guidance on where to find Sensor Calibration in the LOI menu.

Figure 5-2: Trimming the Sensor with the LOI

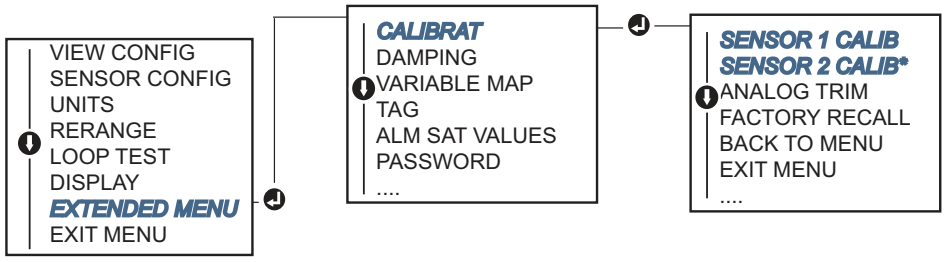

5.4.3 Recall factory trim—sensor trim

The recall factory trim—sensor trim feature allows the restoration of the as-shipped factory settings of the analog output trim. This command can be useful for recovering from an inadvertent trim, incorrect Plant Standard or faulty meter.

Recall factory trim using a Field Communicator

From the *HOME* screen, enter the Fast Key sequence and follow the steps within the Field Communicator to complete the sensor trim.

Device Dashboard Fast Keys	3, 4, 4, 2

Recall factory trim using AMS Device Manager

Procedure

1. Right click on the device and select **Service Tools**.
2. On the Sensor Calibration tab, select the **Restore Factory Calibration**.
3. Follow the screen prompts through the restoring of the calibration settings.

Recall factory trim using LOI

Reference Figure 5-3 for where to find recall sensor trim in the LOI menu.

Figure 5-3: Recalling the Sensor Trim with the LOI

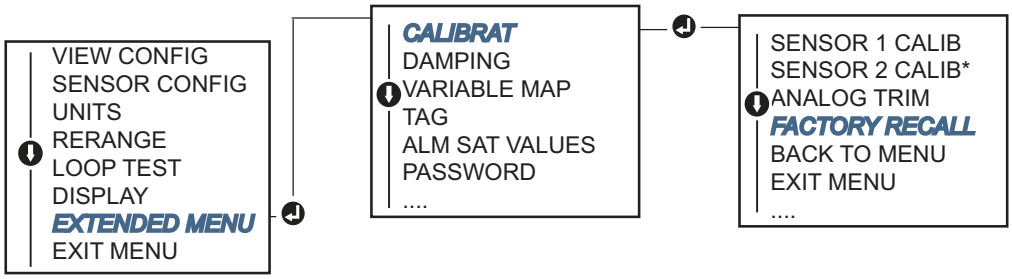

5.4.4 Active calibrator and EMF compensation

The transmitter operates with a pulsating sensor current to allow EMF compensation and detection of open sensor conditions. Because some calibration equipment requires a steady sensor current to function properly, the “Active Calibrator Mode” feature should be used when an Active Calibrator is connected. Enabling this mode temporarily sets the transmitter to provide steady sensor current unless two sensor inputs are configured.

Disable this mode before putting the transmitter back into the process to set the transmitter back to pulsating current. “Active Calibrator Mode” is volatile and will automatically be disabled when a master reset is performed (through HART) or when the power is cycled.

EMF compensation allows the transmitter to provide sensor measurements that are unaffected by unwanted voltages, typically due to thermal EMFs in the equipment connected to the transmitter, or by some types of calibration equipment. If this equipment also requires steady sensor current, the transmitter must be set to “Active Calibrator Mode.” However, the steady current does not allow the transmitter to perform EMF compensation and as a result, a difference in readings between the Active Calibrator and actual sensor may exist.

If a reading difference is experienced and is greater than the plant’s accuracy specification allows, perform a sensor trim with “Active Calibrator Mode” disabled. In this case, an active calibrator capable of tolerating pulsating sensor current must be used or the actual sensors must be connected to the transmitter. When the Field Communicator, AMS Device Manager, or the LOI asks if an Active Calibrator is being used when the sensor trim routine is entered, select No to leave the “Active Calibrator Mode” disabled.

5.5 Trim the analog output

5.5.1 Analog output trim or scaled analog output trim

Perform an output trim or a scaled output trim if the digital value for the primary variable matches the plant’s standards but the transmitter’s analog output does not match the reading on the output device. The output trim function calibrates the transmitter to a 4–20 mA reference scale; the scaled output trim function calibrates to a user-selectable reference scale. To determine the need for an output trim or a scaled output trim, perform a loop test (Perform a loop test).

Figure 5-4: Measurement Dynamics of Temperature Transmitter

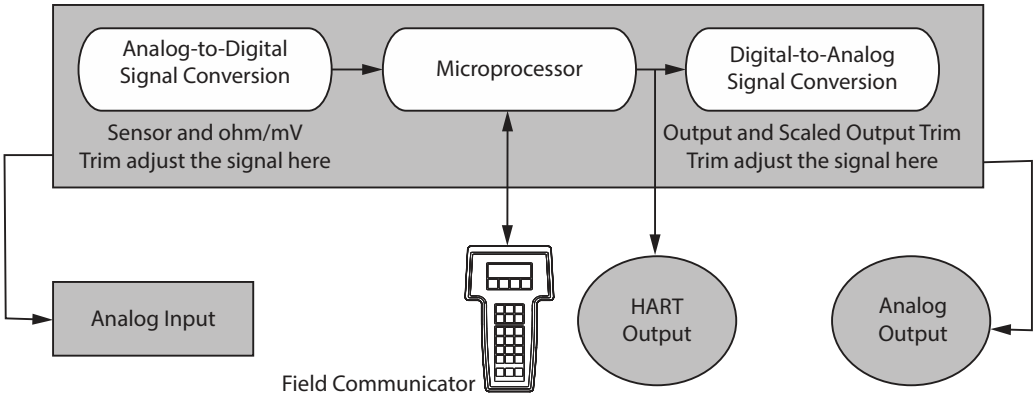

5.5.2 Analog output trim

The analog output trim allows the transmitter’s conversion of the input signal to a 4–20 mA output to be altered (Figure 5-4). Adjust the analog output signal at regular intervals to maintain measurement precision.

Perform analog output trim using a Field Communicator

To perform a digital-to-analog trim, perform the following procedure with Traditional Fast Key sequence:

Procedure

1. Connect an accurate reference meter to the transmitter at the **CONNECT REFERENCE METER** prompt by shunting the power to the transmitter through the reference meter at some point in the loop.
2. From the *HOME* screen, enter the Fast Key sequence.

Device Dashboard Fast Keys	3, 4, 5, 1

Perform analog output trim using AMS Device Manager

Procedure

1. Right click on the device and select **Service Tools**.
2. In the left navigation pane select **Maintenance**.
3. Find the **Analog Calibration** tab and click on the **Analog Trim** button.
4. Follow the screen prompts through the Analog Trimming process.

Perform analog output trim using LOI

Reference Figure 5-5 for guidance on where to find analog trim in the LOI menu.

Figure 5-5: Trimming the Analog Output with the LOI

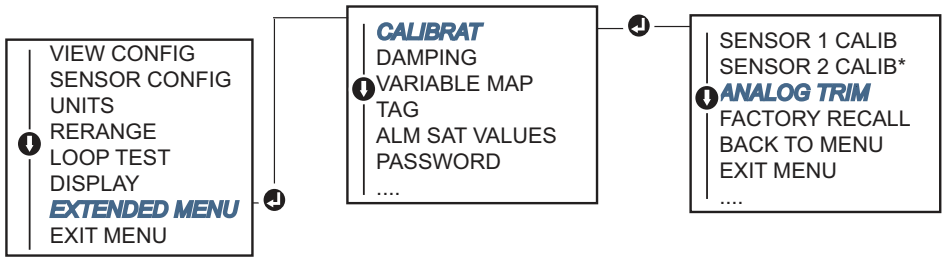

5.5.3 Performing a scaled output trim

The scaled output trim matches the 4 and 20mA points to a user-selectable reference scale other than 4 and 20 mA (2–10 volts, for example). To perform a scaled D/A trim, connect an accurate reference meter to the transmitter and trim the output signal to scale as outlined in the Trim the analog output procedure.

Perform a scaled output trim using a Field Communicator

Procedure

1. Connect an accurate reference meter to the transmitter at the **CONNECT REFERENCE METER** prompt by shunting the power to the transmitter through the reference meter at some point in the loop.
2. From the *HOME* screen, enter the Fast Key sequence.

Device Dashboard Fast Keys	3, 4, 5, 2

Perform a scaled output trim using AMS Device Manager

Procedure

1. Right click on the device and select **Service Tools**.
2. In the left navigation pane select **Maintenance**.
3. Find the **Analog Calibration** tab and select the **Scaled Trim** button.
4. Follow the screen prompts through the Analog Trimming process.

5.6 Transmitter-sensor matching

Use Transmitter-Sensor Matching to enhance the temperature measurement accuracy of the system and if you have a sensor with Callendar-Van Dusen constants. When ordered from Emerson, sensors with Callendar-Van Dusen constants are NIST-traceable.

The transmitter accepts Callendar-Van Dusen constants from a calibrated RTD schedule and generates a special custom curve to match that specific sensor Resistance vs. Temperature performance. Figure 5-6.

Figure 5-6: Standard vs. Actual Sensor Curve

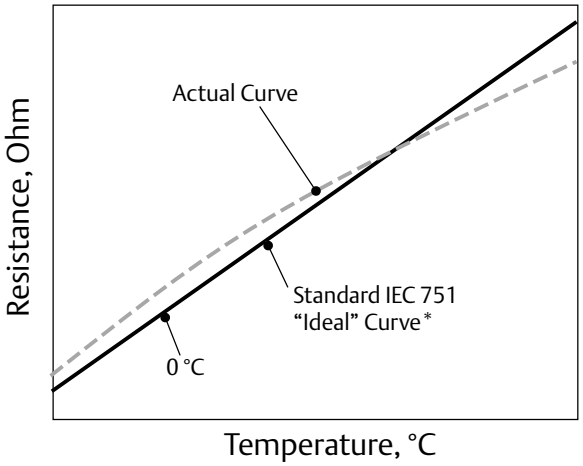

*The Actual Curve is identified from the Callendar-Van Dusen equation.

Matching the specific sensor curve with the transmitter significantly enhances the temperature measurement accuracy. See the comparison below in Table 5-1.

Table 5-1: Standard RTD vs. RTD with Matched CVD Constants with Standard Transmitter Accuracy

System accuracy comparison at 150 °C using a PT 100 (α=0.00385) RTD with a span of 0 to 200 °C			
Standard RTD		Matched RTD	
Rosemount 644	±0.15 °C	Rosemount 644	±0.15 °C
Standard RTD	±1.05 °C	Matched RTD	±0.18 °C
Total System(1)	±1.06 °C	Total System(1)	±0.23 °C

(1) Calculated using root-summed-squared (RSS) statistical method.

$$\text{TotalSystemAccuracy} = \sqrt{(\text{TransmitterAccuracy})^2 + (\text{SensorAccuracy})^2}$$

Table 5-2: Standard RTD vs. RTD with Matched CVD Constants with Enhanced Transmitter Accuracy Option P8

System Accuracy Comparison at 150 °C Using a PT 100 (α=0.00385) RTD with a Span of 0 to 200 °C			
Standard RTD		Matched RTD	
Rosemount 644	±0.10 °C	Rosemount 644	±0.10 °C
Standard RTD	±1.05 °C	Matched RTD	±0.18 °C
Total System(1)	±1.05 °C	Total System(1)	±0.21 °C

(1) Calculated using root-summed-squared (RSS) statistical method

$$\text{TotalSystemAccuracy} = \sqrt{(\text{TransmitterAccuracy})^2 + (\text{SensorAccuracy})^2}$$

Callendar-Van Dusen equation:

The following input variables, included with specially-ordered Rosemount temperature sensors, are required:

$R_t = R_o + R_oa [t – d(0.01t-1)(0.01t) – b(0.01t – 1)(0.01t)^3]$

- R_0 = Resistance at ice point
- Alpha = Sensor specific constant
- Beta = Sensor specific constant
- Delta = Sensor specific constant

To input Callendar-Van Dusen constants, perform one the following procedures:

5.6.1 Perform transmitter-sensor matching using a Field Communicator

From the *HOME* screen, enter the Fast Key sequence.

Device Dashboard Fast Keys	2, 2, 1, 9

5.6.2 Perform transmitter-sensor matching using AMS Device Manager

Procedure

1. Right click on the device and select **Configure**.
2. In the left navigation pane choose **Manual Setup** and choose the **Sensor 1** or **Sensor 2** tab depending on the need.
3. Find the **Transmitter Sensor Matching (CVD)** group box and enter in the required CVD constants. Or select “Set CVD Coefficients” button to be guided through steps. You may also select “Show CVD Coefficients” button to see the current coefficients loaded into the device.
4. Select **Apply** when complete.

Note
When the transmitter-senor matching is disabled, the transmitter reverts to either user or factory trim, whichever was used previously. Make certain the transmitter engineering units default correctly before placing the transmitter into service.

5.7 Switching HART Revision

Some systems are not capable of communicating with HART Revision 7 devices. The following procedures list how to change HART revisions between HART Revision 7 and HART Revision 5.

5.7.1 Switch HART revision using a generic menu

If the HART configuration tool is not capable of communicating with a HART Revision 7 device, it should load a Generic Menu with limited capability. The following procedures allow for switching between HART Revision 7 and HART Revision 5 from a generic menu in any HART compliant configuration tool.

Procedure

Locate “Message” field.

a) To change to HART Revision 5, Enter: **HART5** in the message field.

b) To change to HART Revision 7, Enter: **HART7** in the message field.

5.7.2 Switch HART revision using a Field Communicator

From the ***HOME*** screen, enter the Fast Key sequence and follow steps within the Field Communicator to complete the HART revision change.

Device Dashboard Fast Keys	2, 2, 8, 3

5.7.3 Switch HART revision using AMS Device Manager

Procedure

1. Right click on the device and select **Configure**.
2. In the left navigation pane choose **Manual Setup** and click on the **HART** tab.
3. Select the **Change HART Revision** button and follow the prompts.

Note
HART Revision 7 is only compatible with AMS Device Manager 10.5, and greater. AMS Device Manager version 10.5 requires a software patch to be compatible.

5.7.4 Switch HART revision using LOI

Reference Figure 5-7 for where to find HART Rev in the LOI menu.

Figure 5-7: Switching the HART Revision with the LOI

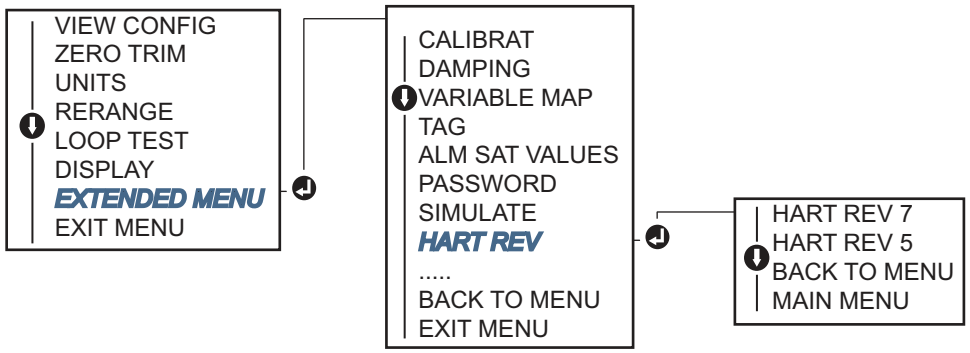

6 Troubleshooting

6.1 Overview

4–20 mA/HART output provides summarized maintenance and troubleshooting suggestions for the most common operating problems.

If you suspect malfunction despite the absence of any diagnostic messages on the Field Communicator display, follow the procedures described in 4–20 mA/HART output to verify that transmitter hardware and process connections are in good working order. Under each of four major symptoms, specific suggestions are offered for solving problems. Always deal with the most likely and easiest-to-check conditions first.

6.2 Safety messages

Read this manual before working with the product. For personal and system safety, and for optimum product performance, ensure you thoroughly understand the contents before installing, using, or maintaining this product.

⚠ WARNING

Follow instructions

Failure to follow these installation guidelines could result in death or serious injury.

Ensure only qualified personnel perform the installation.

Explosions

Explosions could result in death or serious injury.

Installation of the transmitters in a hazardous environment must be in accordance with the appropriate local, national, and international standards, codes, and practices. Please review the Product Certifications section for any restrictions associated with a safe installation.

Do not remove the connection head cover in explosive atmospheres when the circuit is live.

Before connecting a handheld communicator in an explosive atmosphere, ensure the instruments are installed in accordance with intrinsically safe or non-incendive field wiring practices.Verify the operating atmosphere of the transmitter is consistent with the appropriate hazardous locations certifications.

All connection head covers must be fully engaged to meet explosion-proof requirements.

⚠ WARNING

Process leaks

Process leaks could result in death or serious injury.

Do not remove the thermowell while in operation.
Install and tighten thermowells and sensors before applying pressure.

Electrical shock

Electrical shock could cause death or serious injury.

Avoid contact with the leads and terminals. High voltage that may be present on leads can cause electrical shock.

The products described in this document are NOT designed for nuclear-qualified applications.

Using non-nuclear qualified products in applications that require nuclear-qualified hardware or products may cause inaccurate readings.

For information on Rosemount nuclear-qualified products, contact your local Emerson Sales Representative.

Physical access

Unauthorized personnel may potentially cause significant damage to and/or misconfiguration of end users' equipment. This could be intentional or unintentional and needs to be protected against.

Physical security is an important part of any security program and fundamental to protecting your system. Restrict physical access by unauthorized personnel to protect end users' assets. This is true for all systems used within the facility.

⚠ CAUTION

Conduit/cable entries

The conduit/cable entries in the transmitter housing use a ½–14 NPT thread form.
When installing in a hazardous location, use only appropriately listed or Ex certified plugs, glands, or adapters in cable/conduit entries.
Unless otherwise marked, the conduit/cable entries in the housing enclosure use a ½–14 NPT form. Only use plugs, adapters, glands, or conduit with a compatible thread form when closing these entries.
Unless marked, the conduit/cable entries in the transmitter housing use a ½–14 NPT thread form. Entries marked "M20" are M20 × 1.5 thread form. On devices with multiple conduit entries, all entries will have the same thread form. Only use plugs, adapters, glands, or conduit with a compatible thread form when closing these entries.
Only use plugs, adapters, glands, or conduit with a compatible thread form when closing these entries.

6.3 4–20 mA/HART output

6.3.1 Transmitter communication

Transmitter does not communicate with Field Communicator

Potential cause

Loop wiring

Recommended actions

1. Check the revision level of the transmitter device descriptors (DDs) stored in your communicator. The communicator should report Dev v4, DD v1 (improved), or reference Field Communicator for previous versions. Contact Emerson Customer Central for assistance.
2. Check for a minimum of 250 ohms resistance between the power supply and Field Communicator connection.
3. Check for adequate voltage to the transmitter. If a Field Communicator is connected and 250 ohms resistance is properly in the loop, then the transmitter requires a minimum of 12.0 V at the terminals to operate (over entire 3.5–23.0 mA operating range), and 12.5 V minimum to communicate digitally.
4. Check for intermittent shorts, open circuits, and multiple grounds.

6.3.2 High output

Potential cause

Sensor input failure or connection

Recommended actions

1. Connect a Field Communicator and enter the transmitter test mode to check for a sensor failure.
2. Check for a sensor open or short circuit.
3. Check the process variable to see if it is out of range.

Potential cause

Loop wiring

Recommended actions

Check for dirty or defective terminals, interconnecting pins, or receptacles.

Potential cause

Power supply

Recommended actions

Check the output voltage of the power supply at the transmitter terminals. It should be 12.0–42.4 Vdc (over entire 3.75–23 mA operating range).

Potential cause

Electronics

Recommended actions

1. Connect a Field Communicator and enter the transmitter status mode to isolate module failure.
2. Connect a Field Communicator and check the sensor limits to ensure calibration adjustments are within the sensor range.

6.3.3 Erratic output

Potential cause

Loop wiring

Recommended actions

1. Check for adequate voltage to the transmitter. It should be 12.0–42.4 Vdc at the transmitter terminals (over entire 3.75–23 mA operating range).
2. Check for intermittent shorts, open circuits, and multiple grounds.
3. Connect a Field Communicator and enter the Loop test mode to generate signals of 4 mA, 20 mA, and user-selected values.

Potential cause

Electronics

Recommended actions

Connect a Field Communicator and enter the transmitter test mode to isolate module failure.

6.3.4 Low or no output

Potential cause

Sensor element

Recommended actions

1. Connect a Field Communicator and enter the transmitter test mode to isolate a sensor failure.
2. Check the process variable to see if it is out of range.

Potential cause

Loop wiring

Recommended actions

1. Check for adequate voltage to the transmitter. It should be 12.0–42.4 Vdc (over entire 3.75–23 mA operating range).
2. Check for shorts and multiple grounds.
3. Check for proper polarity at the signal terminal.
4. Check the loop impedance.
5. Connect a Field Communicator and enter the Loop test mode.
6. Check wire insulation to detect possible shorts to ground.

Potential cause

Electronics

Recommended actions

Connect a Field Communicator and check the sensor limits to ensure calibration adjustments are within the sensor range.

6.4 Diagnostic messages

Listed in the below sections are detailed tables of the possible messages that will appear on either the LCD/LOI Display, a Field Communicator, or an AMS Device Manager system. Use the tables below to diagnose particular status messages.

- Failed
- Maintenance
- Advisory

6.4.1 Failed status

Electronics failure

ALARM DEVICE ALARM FAIL

Potential cause

Essential electronics in the device have failed. The transmitter may have experienced an electronics failure while attempting to store information.

Recommended actions

1. Restart the transmitter.
2. If condition persists, replace the transmitter. Contact the nearest Emerson Field Service Center if necessary.

Sensor open

Sensor 1 is used here as an example. If Dual Sensors are ordered this alert can apply to either sensor.

ALARM SNSR 1 ALARM FAIL

Potential cause

The transmitter has detected an open sensor condition. The sensor may be disconnected, connected improperly, or malfunctioning.

Recommended actions

1. Verify the sensor connection and wiring. Refer to the wiring diagrams found on the transmitter label to ensure proper wiring.
2. Verify the integrity of the sensor and sensor lead wires. If the sensor is faulty, repair or replace the sensor.

Sensor short

Sensor 1 is used here as an example. If Dual Sensors are ordered this alert can apply to either sensor.

ALARM SNSR 1 ALARM FAIL

Potential cause

The transmitter has detected a shorted sensor condition. The sensor may be disconnected, connected improperly, or malfunctioning.

Recommended actions

1. Verify the process temperature is within the specified sensor's range. Use the Sensor Information button to compare with the process temperature.
2. Verify the sensor is properly wired and connected to the terminals.
3. Verify the integrity of the sensor and sensor lead wires. If the sensor is faulty, repair or replace the sensor.

Terminal temperature failure

ALARM TERM ALARM FAIL

Potential cause

The terminal temperature is outside the internal RTD’s specified operating range.

Recommended actions

Verify the ambient temperature is within the device specified operating range using the terminal temperature information button.

Invalid configuration

CONFG SNSR 1 WARN ERROR

Potential cause

The sensor configuration (type and/or connection) does not match the sensor output and is invalid.

Recommended actions

1. Verify sensor type and number of wires matched the sensor configuration of the device.
2. Reset the device.
3. If error persists, download the transmitter configuration.
4. If error still present, replace the transmitter.

Field device malfunction

ALARM DEVICE ALARM FAIL

Potential cause

The device has malfunctioned or needs immediate attention.

Recommended actions

1. Perform a processor reset.
2. View other alerts to see if the transmitter indicates a specific problem.
3. If the condition persists, replace the device.

6.4.2 Warning status

Hot Backup™ active

HOT BU SNSR 1 HOT BU FAIL

Potential cause

Sensor 1 has failed (open or shorted) and Sensor 2 is now the primary process variable output.

Recommended actions

1. Replace Sensor 1 at you earliest convenience.
2. Reset Hot Backup feature in the device software.

Sensor drift alert active

Sensor 1 is used here as an example. If Dual Sensors are ordered this alert can apply to either sensor.

WARN DRIFT WARN ALERT

Potential cause

The difference between Sensor 1 and 2 has gone beyond the user-configured Drift Alert Threshold.

Recommended actions

1. Verify sensor connections are valid on the transmitter.
2. If necessary, check calibration of each sensor.
3. Verify process conditions match sensor outputs.
4. If calibration fails, one of the sensors has failed. Replace it at your earliest convenience.

Sensor degraded

Sensor 1 is used here as an example. If Dual Sensors are ordered this alert can apply to either sensor.

WARN SNSR 1 DEGRA SNSR 1

Potential cause

The resistance of the thermocouple loop has exceeded the configured threshold. This could be caused by excess EMF.

Recommended actions

1. Check terminal connections on the terminal screws for corrosion.
2. Check the thermocouple loop for any signs of corrosion in terminal blocks, wire thinning, wire breaks, or faulty connections.
3. Verify the integrity of the sensor itself. Harsh process conditions may cause long-term sensor failures.

Calibration error

Potential cause

The value entered for the user trim point was not acceptable.

Recommended actions

Re-trim the device, ensure the user entered calibration points are close to the applied calibration temperature.

Sensor out of operating limits

Sensor 1 is used here as an example. If Dual Sensors are ordered this alert can apply to either sensor.

SAT SNSR 1 XX.XXX°C

Potential cause

Sensor readings are outside the sensor's specified range.

Recommended actions

1. Verify the process temperature is within the specified sensor's range. Use the Sensor Information button to compare with the process temperature.
2. Verify the sensor is properly wired and connected to the terminals.
3. Verify the integrity of the sensor and sensor lead wires. If the sensor is faulty, repair or replace the sensor.

Terminal temperature out of operating limits

SAT TERM DEGRA WARN

Potential cause

The terminal temperature is outside the on-board RTD specified operating range

Recommended actions

Verify the ambient temperature is within the device specified operating range using the Terminal Temperature Information Button.

6.4.3 Other LCD display messages

LCD is not displaying correctly or at all

Rosemount 644 HART 7 on screen

Potential cause

The display may not be functioning or it may be stuck on Home screen.

Recommended actions

If the meter does not appear to function, ensure the transmitter is configured for the meter option you desire. The meter will not function if the LCD Display option is set to Not Used.

Analog output fixed

WARN LOOP WARN FIXED

Potential cause

The analog output is set to a fixed value and is not currently tracking the HART Primary Variable.

Recommended actions

1. Verify that it was intended for the transmitter to be operating in “Fixed Current Mode.”
2. Disable “Fixed Current Mode” in Service Tools to have the analog output operate normally.

Simulation active

Potential cause

The device is in simulation mode and may not be reporting actual information.

Recommended actions

1. Verify simulation is no longer required.
2. Disable simulation mode in service tools.
3. Perform a device reset.

6.5 Return of materials

To expedite the return process in North America, call the Emerson National Response Center toll-free at 800-654-7768. This center, available 24 hours a day, will assist you with any needed information or materials.

The center will ask for the following information:

- Product model
- Serial numbers
- The last process material to which the product was exposed

The center will provide:

- A Return Material Authorization (RMA) number
- Instructions and procedures that are necessary to return goods that were exposed to hazardous substances.

For other locations, contact an Emerson sales representative.

Note
If a hazardous substance is identified, a Safety Data Sheet (SDS), required by law to be available to people exposed to specific hazardous substances, must be included with the returned materials.

7 Safety Instrumented Systems (SIS) Certification

7.1 SIS certification

The safety-critical output of the Rosemount 644P Temperature Transmitter is provided through a 2-wire, 4–20 mA signal representing temperature. The transmitter can be equipped with or without a display. The Rosemount 644P Safety Certified Safety Transmitter is certified to: Low demand; Type B.

- SIL 2 for random integrity at HFT=0
- SIL 3 for random integrity at HFT=1
- SIL 3 for systematic integrity

7.2 Safety certified identification

All Rosemount 644 HART Head Mount and Field Mount Transmitters must be identified as safety certified before installing into a SIS.

To identify a safety-certified transmitter, ensure the device satisfies the requirements below:

Procedure

1. Verify the transmitter was ordered with output option code “A” and option code “QT”. This signifies that it is a 4–20 mA/HART safety certified device.
   a) For example: MODEL 644HA.....QT.....
2. See a Yellow Tag affixed to the top of the transmitter face or a Yellow Tag affixed to the outside of the enclosure if pre-assembled.
3. Check the Namur Software Revision located on the adhesive transmitter tag. “SW _._._”.

   If the Device label software revision is 1.1.1 or higher, the device is safety certified.

7.3 Installation

Installations are to be performed by qualified personnel. No special installation is required in addition to the standard installation practices outlined in this document. Always ensure a proper seal by installing the electronics housing cover(s) so that metal contacts metal.

The loop should be designed so the terminal voltage does not drop below 12 Vdc when the transmitter output is 24.5 mA.

Environmental limits are available in the Rosemount 644 Temperature Transmitter product page.

7.4 Configuration

Use any HART-capable configuration tool or the optional Local Operator Interface (LOI) to communicate with and verify the initial configuration or any configuration changes made to the transmitter prior to operating in Safety Mode. All configuration methods outlined in Configuration are the same for the safety-certified transmitter with any differences noted.

Software lock must be used in order to prevent unwanted changes to the transmitter configuration.

Note
Transmitter output is not safety-rated during the following: Configuration changes, Multidrop operation, Simulation, Active calibrator mode, and loop tests. Alternative means should be used to ensure process safety during transmitter configuration and maintenance activities.

7.4.1 Damping

User-adjustable damping affects the transmitter's ability to respond to changes in the applied process. The damping value + response time should not exceed the loop requirements.

If using a thermowell assembly, ensure to also take into account the added response time due to thermowell material.

7.4.2 Alarm and saturation levels

DCS or safety logic solver should be configured to match transmitter configuration. Figure 7-1 identifies the three alarm levels available and their operations values.

Figure 7-1: Alarm Levels

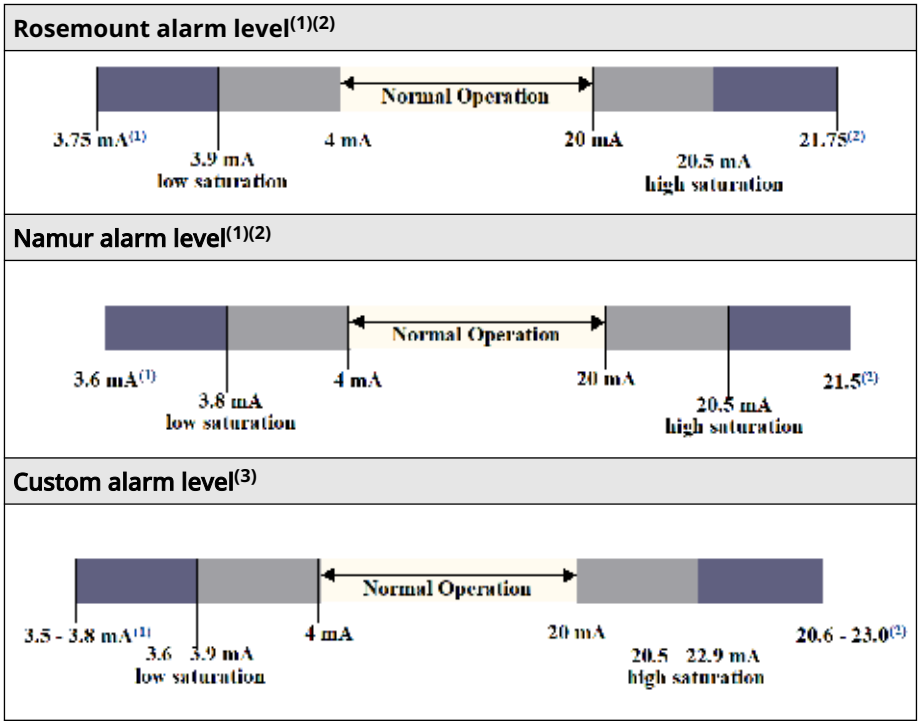

(1) Transmitter Failure, hardware or software alarm in LO position.
(2) Transmitter Failure, hardware or software alarm in HI position.
(3) Low alarm must be at least 0.1 mA lower than the low saturation value.

7.5 Operation and maintenance

7.5.1 Proof test

The following proof tests are recommended. In the event that an error is found in the safety functionality, proof test results and corrective actions taken must be documented at Emerson.com/Rosemount/Safety.

All proof test procedures must be carried out by qualified personnel.

7.5.2 Partial proof test 1

The partial proof test 1 consists of a power cycle plus reasonability checks of the transmitter output. Reference the FMEDA Report for percent of possible DU failures in the device.

FMEDA report can be found at Rosemount 644 Temperature Transmitter product page.

Required tools: Field Communicator, mA meter

Procedure

1. Bypass the safety PLC or take other appropriate action to avoid a false trip.
2. Send a HART command to the transmitter to go to high alarm current output and verify that the analog current reaches that value. This tests for compliance voltage problems such as low loop power supply voltage or increased wiring resistance. This also tests for other possible failures.
3. Send a HART command to the transmitter to go to the low alarm current output and verify that the analog current reaches that value. This tests for possible quiescent current related failures.
4. Use the HART communicator to view detailed device status to ensure no alarms or warnings are present in the transmitter.
5. Perform reasonability check on the sensor value(s) versus an independent estimate (i.e. from direct monitoring of BPCS value) to show current reading is good.
6. Restore the loop to full operation.
7. Remove the bypass from the safety PLC or otherwise restore to normal operation.

7.5.3 Comprehensive proof test 2

The comprehensive proof test 2 consists of performing the same steps as the partial proof test but with a two-point calibration of the temperature sensor in place of the reasonability check. Reference the FMEDA report for percent of possible DU failures in the device.

Required tools: Field Communicator, temperature calibration equipment

Procedure

1. Bypass the safety PLC or take other appropriate action to avoid a false trip.
2. Perform partial proof test 1.
3. Verify the measurement for two temperature points for Sensor 1. Verify the measurement for two temperature points for Sensor 2, if second sensor is present.
4. Perform reasonability check of the housing temperature.
5. Restore the loop to full operation.
6. Remove the bypass from the safety PLC or otherwise restore to normal operation.

7.5.4 Comprehensive proof test 3

The comprehensive proof test 3 includes a comprehensive proof test along with a simple sensor proof test. Reference the FMEDA report for percent of possible DU failures in the device.

Procedure

1. Bypass the safety PLC or take other appropriate action to avoid a false trip.

2. Perform simple proof test 1.
3. Connect calibrated sensor simulator in place of sensor 1.
4. Verify safety accuracy of two temperature points inputs to transmitter.
5. If sensor 2 is used, repeat Step 3 and Step 4.
6. Restore sensor connections to transmitter.
7. Perform reasonability check of transmitter housing temperature.
8. Perform reasonability check on the sensor(s) values versus an independent estimate (i.e. from direct monitoring of BPCS value) to show current reading is acceptable.
9. Restore loop to full operation.
10. Remove the bypass from the safety PLC or otherwise restore to normal operation.

7.5.5 Inspection

Visual inspection	Not required.
Special tools	Not required.
Product repair	The Rosemount 644 is repairable by replacement only.

All failures detected by the transmitter diagnostics or by the proof-test must be reported. Feedback can be submitted electronically at Emerson.com/Rosemount/Contact-Us.

7.6 Specifications

The Rosemount 644 Transmitter must be operated in accordance to the functional and performance specifications provided in the Product Data Sheet.

7.6.1 Failure rate data

The report is available at the Rosemount 644 Temperature Transmitter product page.

7.6.2 Failure values

Safety Deviation (defines what is dangerous in a FMEDA):

- Span ≥ 100 °C ± 2% of process variable span
- Span << 100 °C ± 2 °C

Safety response time: five seconds

7.6.3 Product life

50 years - based on worst case component wear-out mechanisms — not based on wear-out of process sensors.

Report any safety related product information at Emerson.com/Rosemount/Contact-Us.

A Reference Data

A.1 Product certifications

To view current Rosemount 644 Temperature Transmitter product certification, follow these steps:

Procedure

1. Go to Emerson.com/Rosemount/Rosemount-644.
2. Scroll as needed to the green menu bar and click **Documents & Drawings**.
3. Click **Manuals & Guides**.
4. Select the appropriate Quick Start Guide.

A.2 Ordering information, specifications, and drawings

To view current Rosemount 644 Temperature Transmitter ordering information, specifications, and drawings, follow these steps:

Procedure

1. Go to Emerson.com/Rosemount/Rosemount-644.
2. Scroll as needed to the green menu bar and click **Documents & Drawings**.
3. For installation drawings, click **Drawings & Schematics**.
4. Select the appropriate Product Data Sheet.
5. For ordering information, specifications, and dimensional drawings, click **Data Sheets & Bulletins**.
6. Select the appropriate Product Data Sheet.

A.3 AMS terms

Resistance:	This is the existing resistance reading of the thermocouple loop.
Resistance threshold exceeded:	The check box indicates if the sensor resistance has passed the Trigger Level.
Trigger level:	Threshold resistance value for the thermocouple loop. The trigger level may be set for 2, 3, or 4 × Baseline or the default of 5000 ohms. If the resistance of the thermocouple loop surpasses the Trigger Level, a maintenance alert will be generated.
Baseline resistance:	The resistance of the thermocouple loop obtained after installation, or after resetting the baseline value. The trigger level may be calculated from the baseline value.
Reset baseline resistance:	Launches a method to recalculate the Baseline value (which may take several seconds).
TC diagnostic mode sensor 1or 2:	This field will read either enabled or disabled indicating when the thermocouple degradation diagnostic is on or off for that sensor.

B Field Communicator Menu Trees and Fast Keys

B.1 Field Communicator menu trees

Figure B-1: Overview

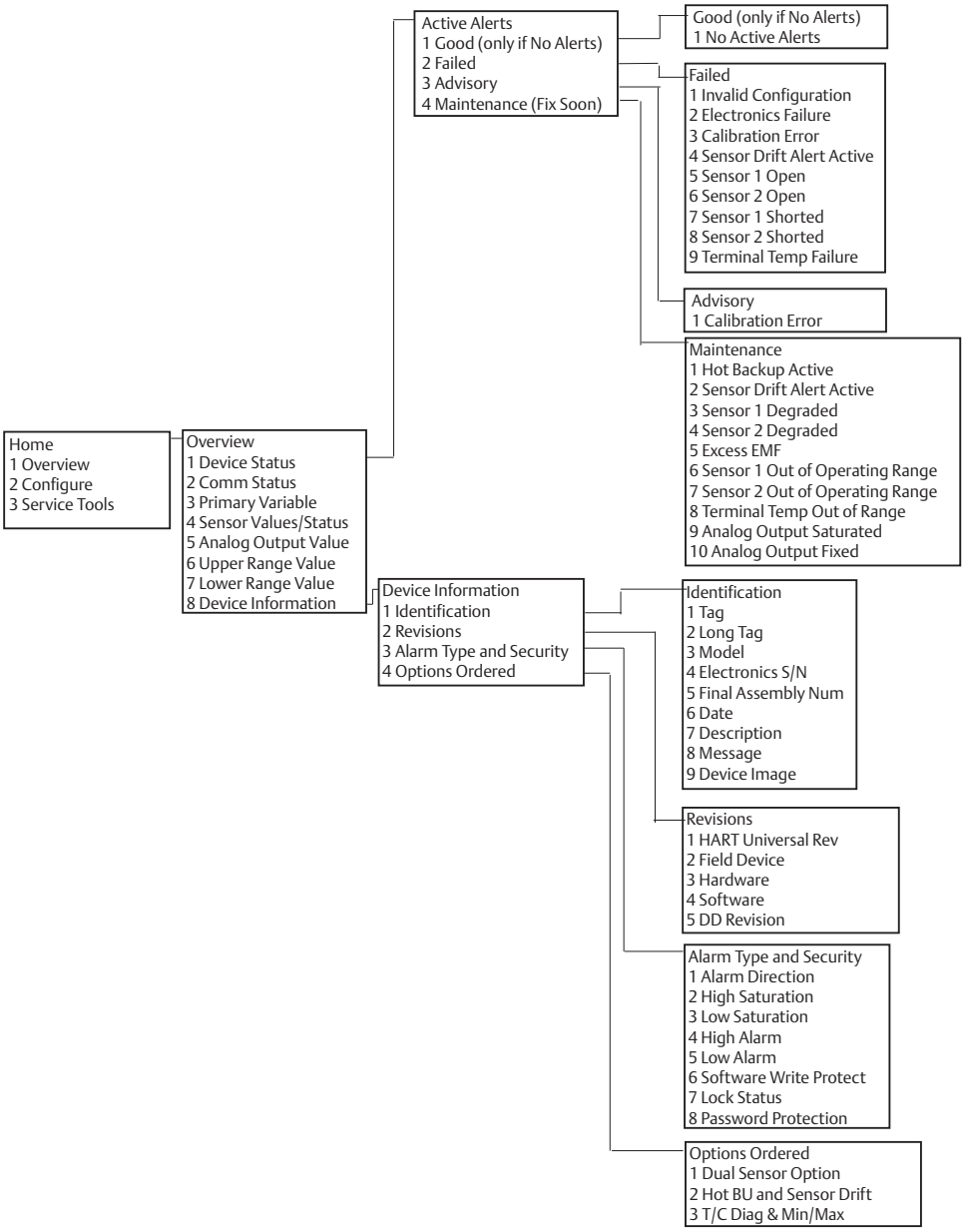

Figure B-2: Configure

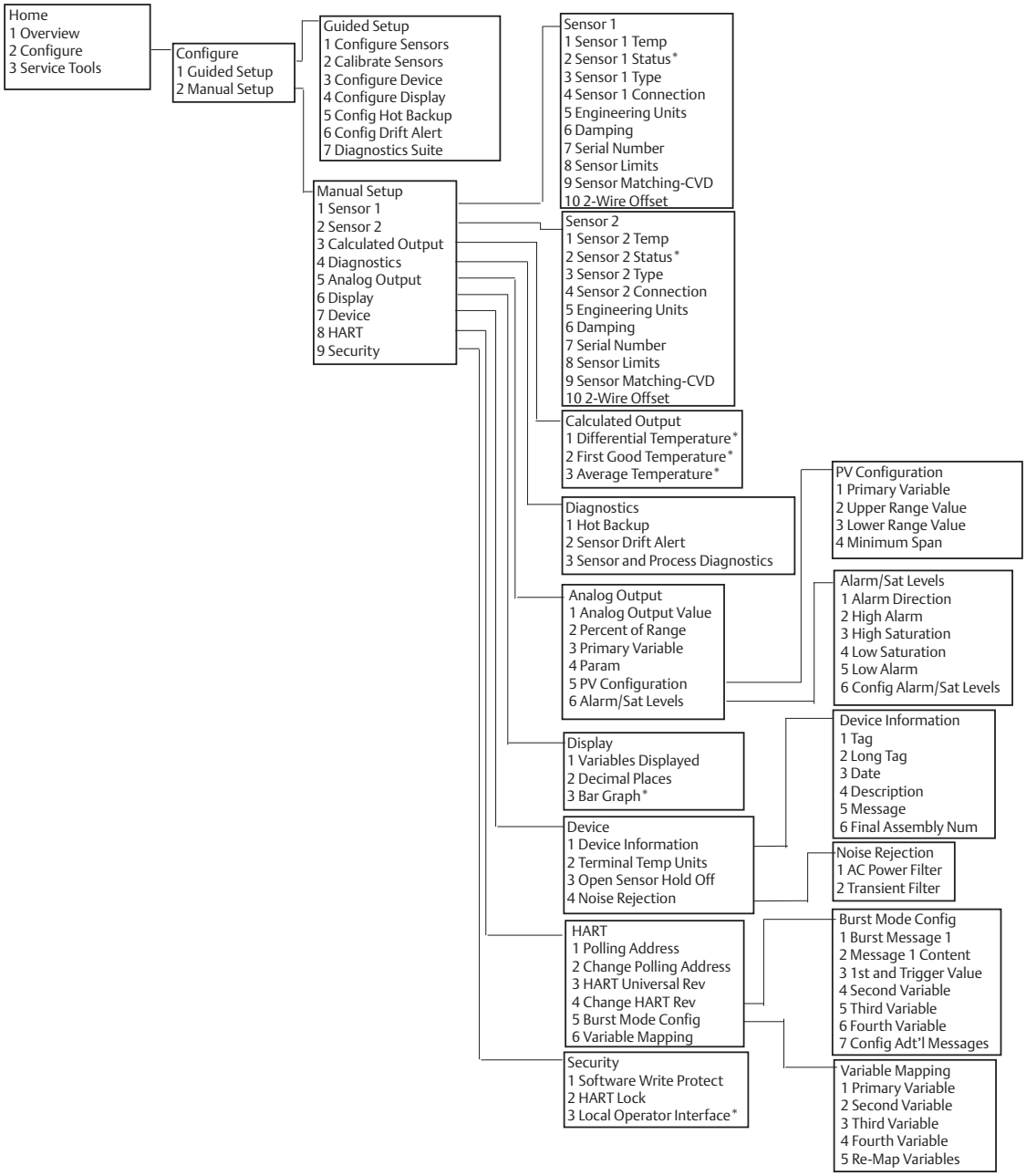

Figure B-3: Service Tools

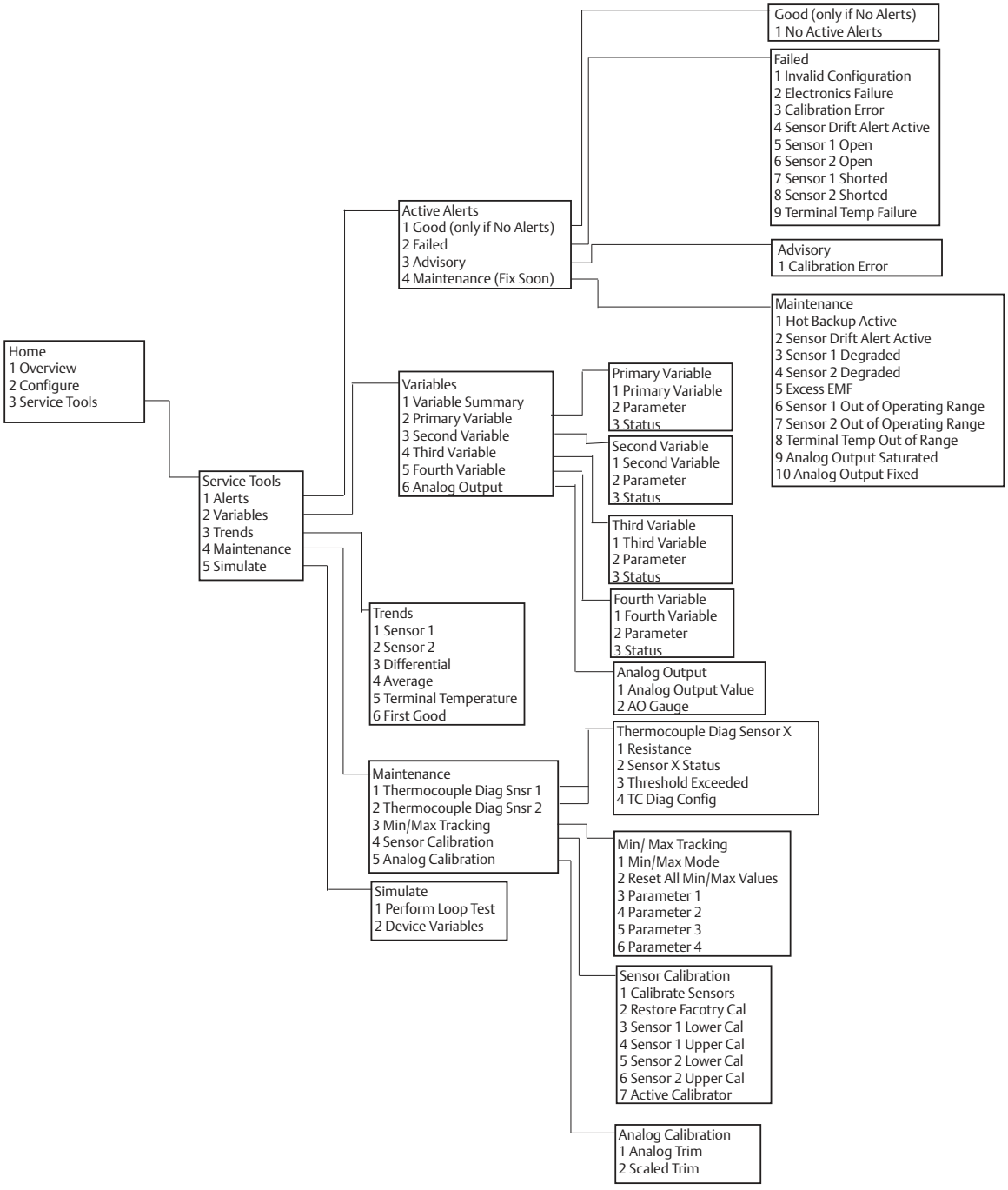

Figure B-4: HART Revision 7 Field Communicator Menu Tree – Overview

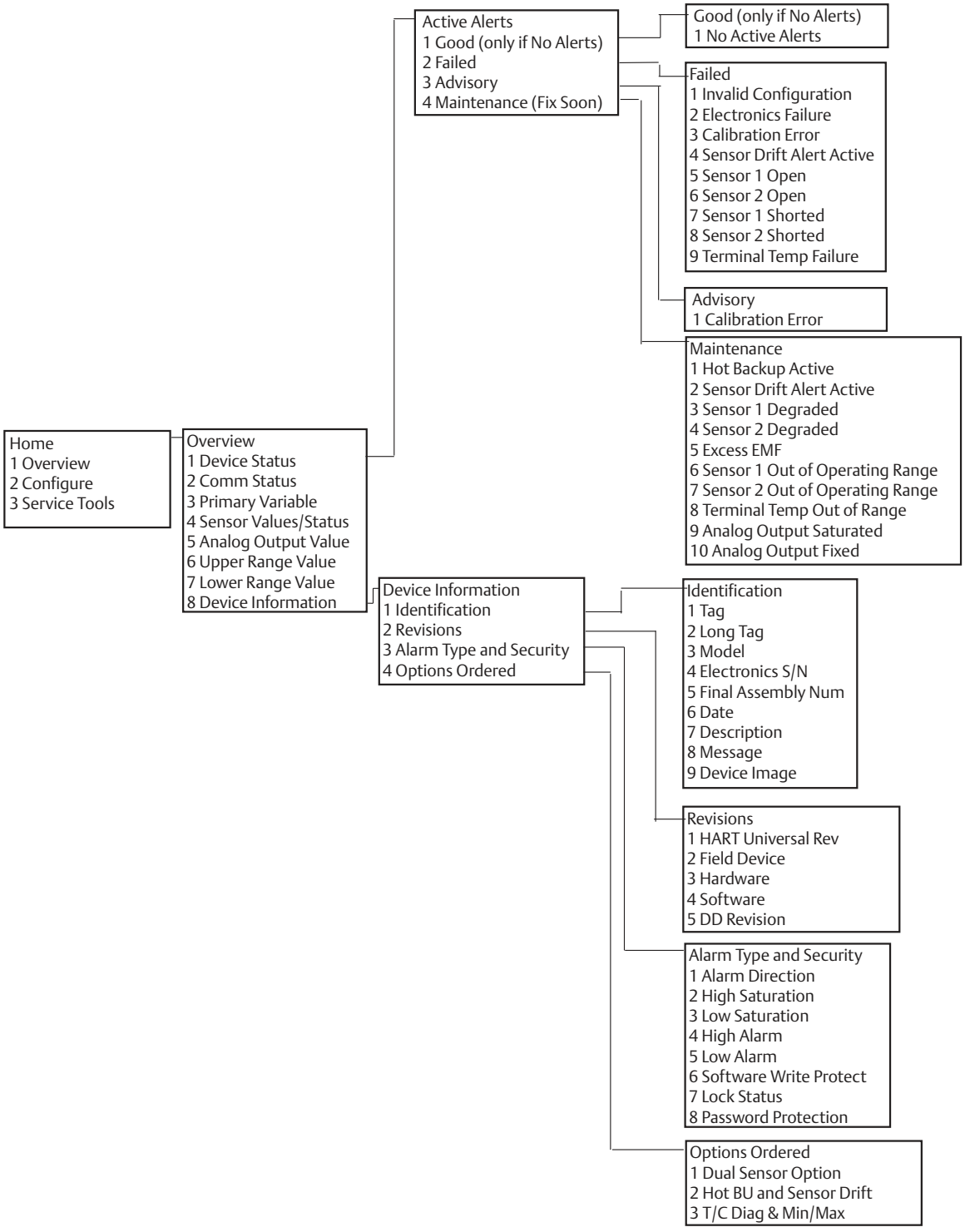

Figure B-5: HART Revision 7 Field Communicator Menu Tree - Configure

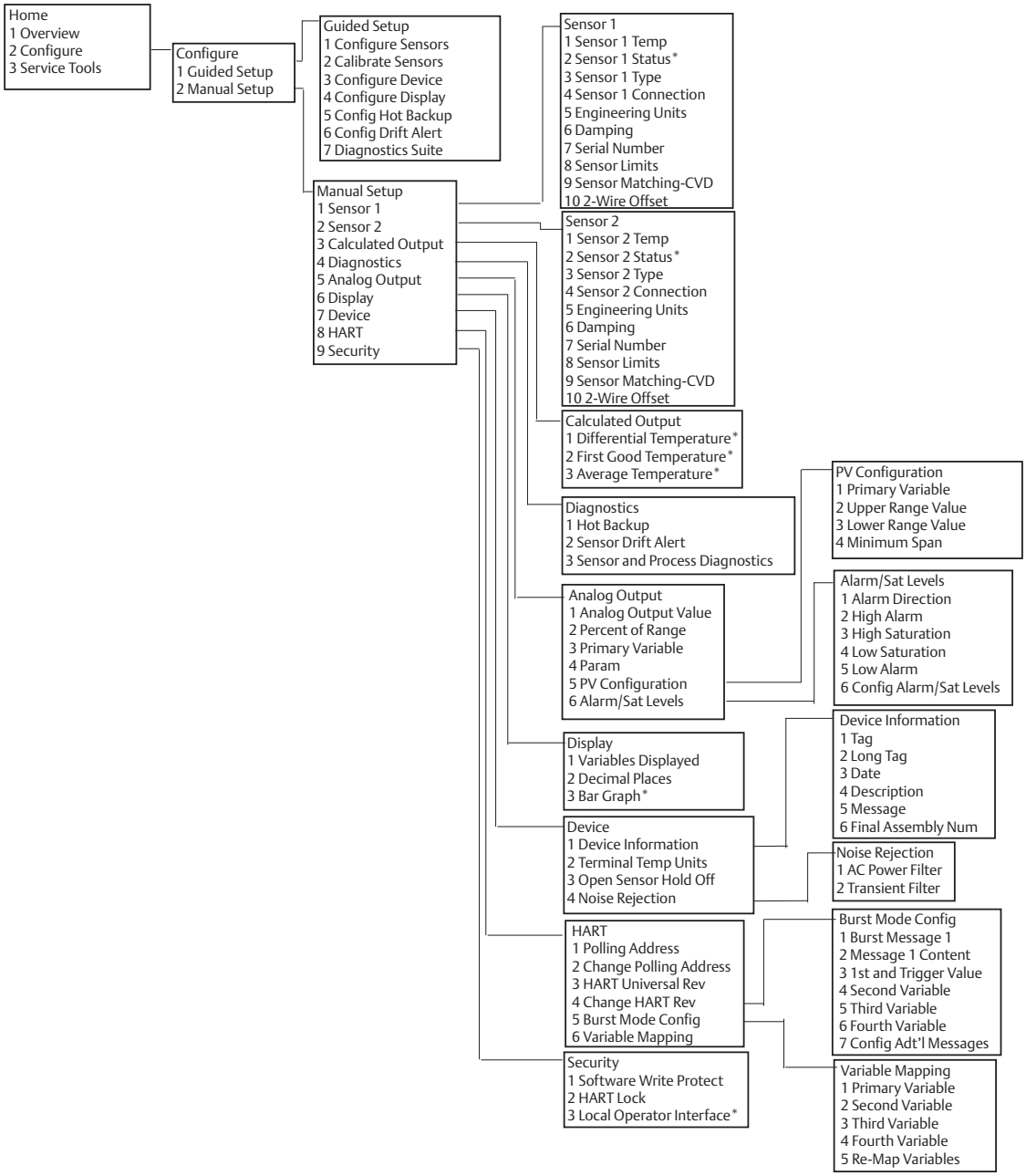

Figure B-6: Service Tools

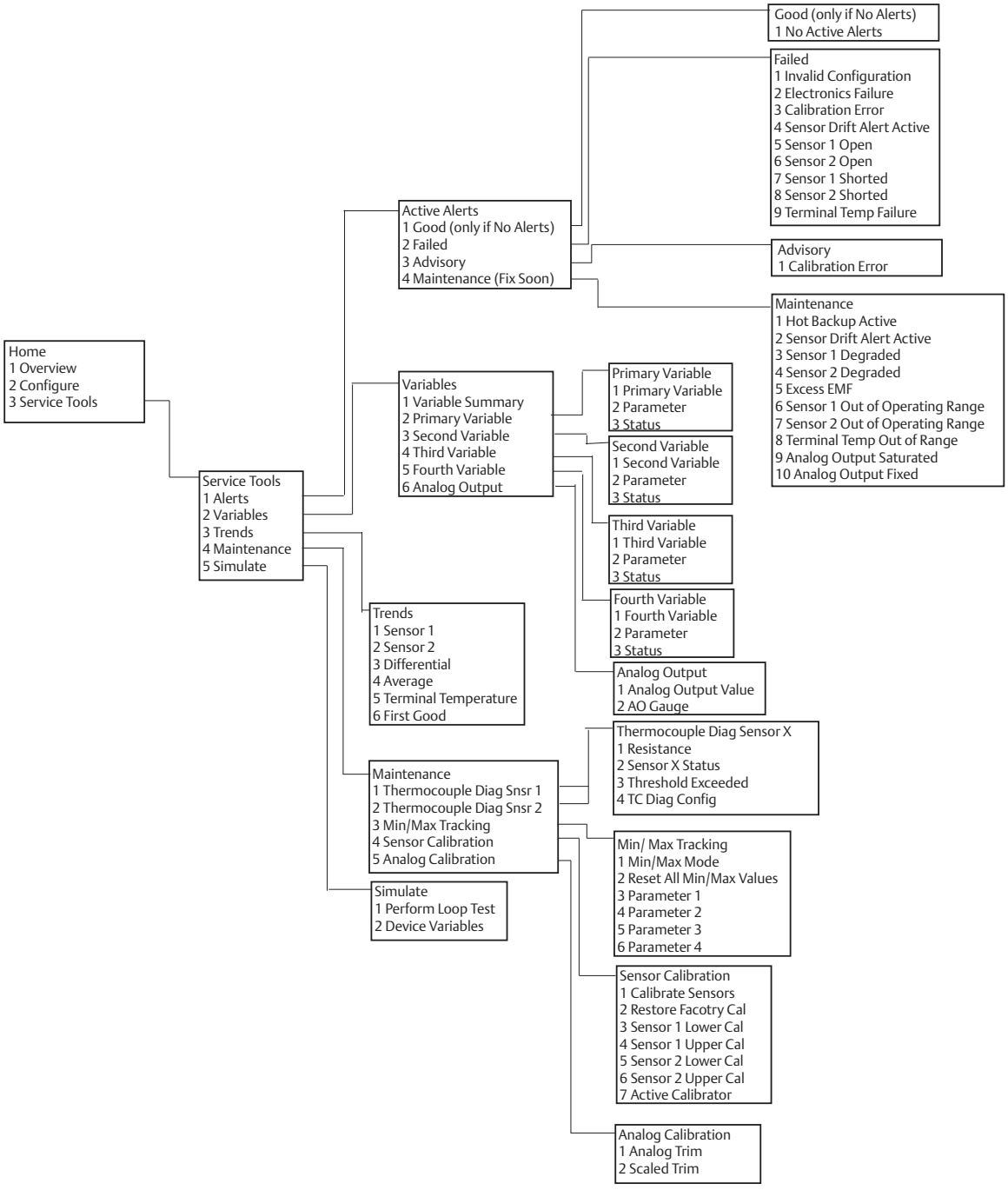

B.2 Field Communicator Fast Keys

Table B-1: Device Revision 8 and 9 (HART 5 and 7) Field Communicator Device Dashboard Fast Key Sequences

Function	HART 5	HART 7
Alarm Values	2, 2, 5, 6	2, 2, 5, 6
Analog Calibration	3, 4, 5	3, 4, 5
Analog Output	2, 2, 5, 1	2, 2, 5, 1
Average Temperature Setup	2, 2, 3, 3	2, 2, 3, 3
Burst Mode	2, 2, 8, 4	2, 2, 8, 4
Comm Status	N/A	1, 2
Configure additional messages	N/A	2, 2, 8, 4, 7
Configure Hot Backup	2, 2, 4, 1, 3	2, 2, 4, 1, 3
D/A Trim	3, 4, 4, 1	3, 4, 4, 1
Damping Values	2, 2, 1, 5	2, 2, 1, 6
Date	2, 2, 7, 1, 2	2, 2, 7, 1, 3
Display Setup	2, 1, 4	2, 1, 4
Descriptor	2, 2, 7, 1, 4	2, 2, 7, 1, 5
Device Information	1, 8, 1	1, 8, 1
Differential Temperature Setup	2, 2, 3, 1	2, 2, 3, 1
Drift Alert	2, 2, 4, 2	2, 2, 4, 2
Filter 50/60 Hz	2, 2, 7, 4, 1	2, 2, 7, 4, 1
First Good Temperature Setup	2, 2, 3, 2	2, 2, 3, 2
Hardware Revision	1, 8, 2, 3	1, 8, 2, 3
HART Lock	N/A	2, 2, 9, 2
Intermittent Sensor Detect	2, 2,7, 4, 2	2, 2, 7, 4, 2
Loop Test	3, 5, 1	3, 5, 1
Locate Device	N/A	3, 4, 6, 2
Lock Status	N/A	1, 8, 3, 8
LRV (Lower Range Value)	2, 2, 5, 5, 3	2, 2, 5, 5, 3
LSL (Lower Sensor Limit)	2, 2, 1, 7, 2	2, 2, 1, 8, 2
Message	2, 2, 7, 1, 3	2, 2, 7, 1, 4
Open Sensor Hold off	2, 2, 7, 3	2, 2, 7, 3
Percent Range	2, 2, 5, 2	2, 2, 5, 2

Table B-1: Device Revision 8 and 9 (HART 5 and 7) Field Communicator Device Dashboard Fast Key Sequences *(continued)*

Function	HART 5	HART 7
Sensor 1 Configuration	2, 1, 1	2, 1, 1
Sensor 2 Configuration	2, 1, 1	2, 1, 1
Sensor 1 Serial Number	2, 2, 1, 6	2, 2, 1, 7
Sensor 2 Serial Number	2, 2, 2, 7	2, 2, 2, 8
Sensor 1 Type	2, 2, 1, 2	2, 2, 1, 3
Sensor 2 Type	2, 2, 2, 2	2, 2, 2, 3
Sensor 1 Unit	2, 2, 1, 4	2, 2, 1, 5
Sensor 2 Unit	2, 2, 2, 4	2, 2, 2, 5
Sensor 1 Status	N/A	2, 2, 1, 2
Sensor 2 Status	N/A	2, 2, 2, 2
Simulate Digital Signal	N/A	3, 5, 2
Software Revision	1, 8, 2, 4	1, 8, 2, 4
Tag	2, 2, 7, 1, 1	2, 2, 7, 1, 1
Long Tag	N/A	2, 2, 7, 1, 2
Terminal Temperature	2, 2, 7, 1	2, 2, 8, 1
URV (Upper Range Value)	2, 2, 5, 5, 2	2, 2, 5, 5, 2
USL (Upper Sensor Limit)	2, 2, 1, 7, 2	2, 2, 1, 8, 2
Variable Mapping	2, 2, 8, 5	2, 2, 8, 5
2-wire Offset Sensor 1	2, 2, 1, 9	2, 2, 1, 10
2-wire Offset Sensor 2	2, 2, 2, 9	2, 2, 2, 10

Table B-2: Device Revision 7 Field Communicator Traditional Fast Key Sequences

Function	Fast Keys
Active Calibrator	1, 2, 2, 1, 3
Alarm/Saturation	1, 3, 3, 2
AO Alarm Type	1, 3, 3, 2, 1
Burst Mode	1, 3, 3, 3, 3
Burst Option	1, 3, 3, 3, 4
Calibration	1, 2, 2
Callendar-Van Dusen	1, 3, 2, 1
Configuration	1, 3
D/A Trim	1, 2, 2, 2

Table B-2: Device Revision 7 Field Communicator Traditional Fast Key Sequences *(continued)*

Function	Fast Keys
Damping Values	1, 1, 10
Date	1, 3, 4, 2
Descriptor	1, 3, 4, 3
Device Info	1, 3, 4
Device Output Configuration	1, 3, 3
Diagnostics and Service	1, 2
Filter 50/60 Hz	1, 3, 5, 1
Hardware Rev	1, 4, 1
Hart Output	1, 3, 3, 3
Intermittent Detect	1, 3, 5, 4
LCD Display Options	1, 3, 3, 4
Loop Test	1, 2, 1, 1
LRV (Lower Range Value)	1, 1, 6
LSL (Lower Sensor Limit)	1, 1, 8
Measurement Filtering	1, 3, 5
Message	1, 3, 4, 4
Meter Configuring	1, 3, 3, 4, 1
Meter Decimal Point	1, 3, 3, 4, 2
Num Req Preams	1, 3, 3, 3, 2
Open Sensor Hold off	1, 3, 5, 3
Percent Range	1, 1, 5
Poll Address	1, 3, 3, 3, 1
Process Temperature	1, 1
Process Variables	1, 1
PV Damping	1, 3, 3, 1, 3
PV Unit	1, 3, 3, 1, 4
Range Values	1, 3, 3, 1
Review	1, 4
Scaled D/A Trim	1, 2, 2, 3
Sensor Connection	1, 3, 2, 1, 1
Sensor 1 Setup	1, 3, 2, 1, 2
Sensor Serial Number	1, 3, 2, 1, 4
Sensor 1 Trim	1, 2, 2, 1

Table B-2: Device Revision 7 Field Communicator Traditional Fast Key Sequences *(continued)*

Function	Fast Keys
Sensor 1 Trim- Factory	1, 2, 2, 1, 2
Sensor Type	1, 3, 2, 1, 1
Software Revision	1, 4, 1
Status	1, 2, 1, 4
Tag	1, 3, 4, 1
Terminal Temperature	1, 3, 2, 2
Test Device	1, 2, 1
URV (Upper Range Value)	1, 1, 7
USL (Upper Sensor Limit)	1, 1, 9
Variable Mapping	1, 3, 1
Variable Re-Map	1, 3, 1, 5
Write Protect	1, 2, 3
2-Wire Offset	1, 3, 2, 1, 2, 1

C Local Operator Interface (LOI)

- The LOI requires option code M4 to be ordered.
- To activate the LOI, push either configuration button. Configuration buttons are located on the LCD display (remove the housing cover to access the interface. See Table C-1 for configuration button functionality and Figure C-1 for configuration button location).

When using the LOI for configuration, several features require multiple screens for a successful configuration. Data entered will be saved on a screen-by-screen basis; the LOI will indicate this by flashing SAVED on the LCD display each time.

Note
Entering into the LOI menu effectively disables the ability to write to the device by any other host or configuration tool. Ensure this is communicated to necessary personnel before using the LOI for device configuration.

Figure C-1: LOI Configuration Buttons

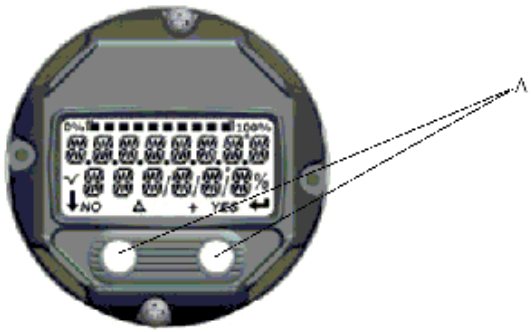

A. Configuration buttons

Table C-1: LOI Button Operation

Button	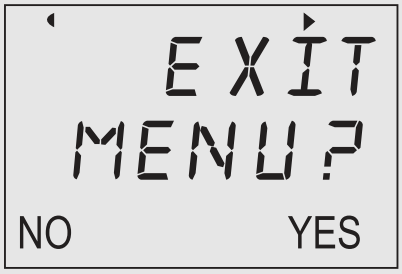	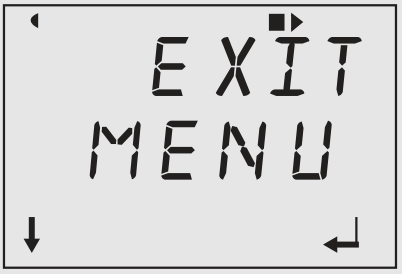
Left	No	SCROLL
Right	Yes	ENTER

LOI password

An LOI password can be entered and enabled to prevent review and modification of device configuration via the LOI. This does not prevent configuration from HART® or through the control system. The LOI password is a four-digit code that is to be set by the user. If the password is lost or forgotten the master password is “9307”. The LOI password can be configured and enabled/disabled by HART communication via a Field Communicator, AMS Device Manager, or the LOI.

C.1 Number entry

Floating-point numbers can be entered with the LOI. All eight number locations on the top line can be used for number entry. Refer to Table 2-2 for LOI button operation. Below is a floating-point number entry example for changing a value of “-0000022” to “000011.2”

Table C-2: LOI Number Entry

Step	Instruction	Current position (indicated by underline)
1	When the number entry begins, the left most position is the selected position. In this example, the negative symbol, “-“, will be flashing on the screen.	-0000022
2	Press the scroll button until the “0” is blinking on the screen in the selected position.	00000022
3	Press the enter button to select the “0” as an entry. The second digit from the left will be blinking.	00000022
4	Press the enter button to select “0” for second digit. The third digit from the left will be blinking.	00000022
5	Press the enter button to select “0” for the third digit. The fourth digit from the left will now be blinking.	00000022
6	Press the enter button to select “0” for the fourth digit. The fifth digit from the left will now be blinking.	00000022
7	Press scroll to navigate through the numbers until the “1” is on the screen.	00001022
8	Press the enter button to select the “1” for the fifth digit. The sixth digit from the left will now be blinking.	00001022
9	Press scroll to navigate through the numbers until the “1”, is on the screen.	00001122
10	Press the enter button to select the “1” for the sixth digit. The seventh digit from the left will now be blinking.	00001122

Table C-2: LOI Number Entry *(continued)*

Step	Instruction	Current position (indicated by underline)
11	Press scroll to navigate through the numbers until the decimal, ".", is on the screen.	000011.2
12	Press the enter button to select the decimal, ".", for the seventh digit. After pressing enter, all digits to the right of the decimal will now be zero. The eighth digit from the left will now be blinking.	000011.0
13	Press the scroll button to navigate through the numbers until the "2", is on the screen.	000011.2
14	Press the enter button to select the "2" for the eighth digit. The number entry will be complete and a "SAVE" screen will be shown.	000011.2

Usage notes:

- It is possible to move backwards in the number by scrolling to the left and pressing enter. The left arrow appears as such in the LOI: ;
- The negative symbol is only allowed in the left most position.
- The Over score character "‾ "is used in the LOI to enter a blank space for Tag entry.

C.2 Text entry

Text can be entered with the LOI. Depending on the edited item, up to eight locations on the top line can be used for text entry. Text entry follows the same rules as the number entry rules in Number entry, except the following characters are available in all locations: A-Z, 0-9, -, /, space.

C.2.1 Scrolling

When it is desired to move more quickly through the list of menu choices or alpha numeric characters without individual button presses, a faster scrolling technique is available. Scrolling functionality allows the user to walk through any menu in forward or reverse order, enter text or digits easily and quickly.

Menu scrolling

Simply hold down the left button after it brings you to the next menu item, each of the proceeding menus will be shown one after another while the button is pressed down.

Text or digit entry scrolling

Quickly navigate through number and text menu lists by holding down the left button the same as in Menu.

Figure C-2: Scrolling

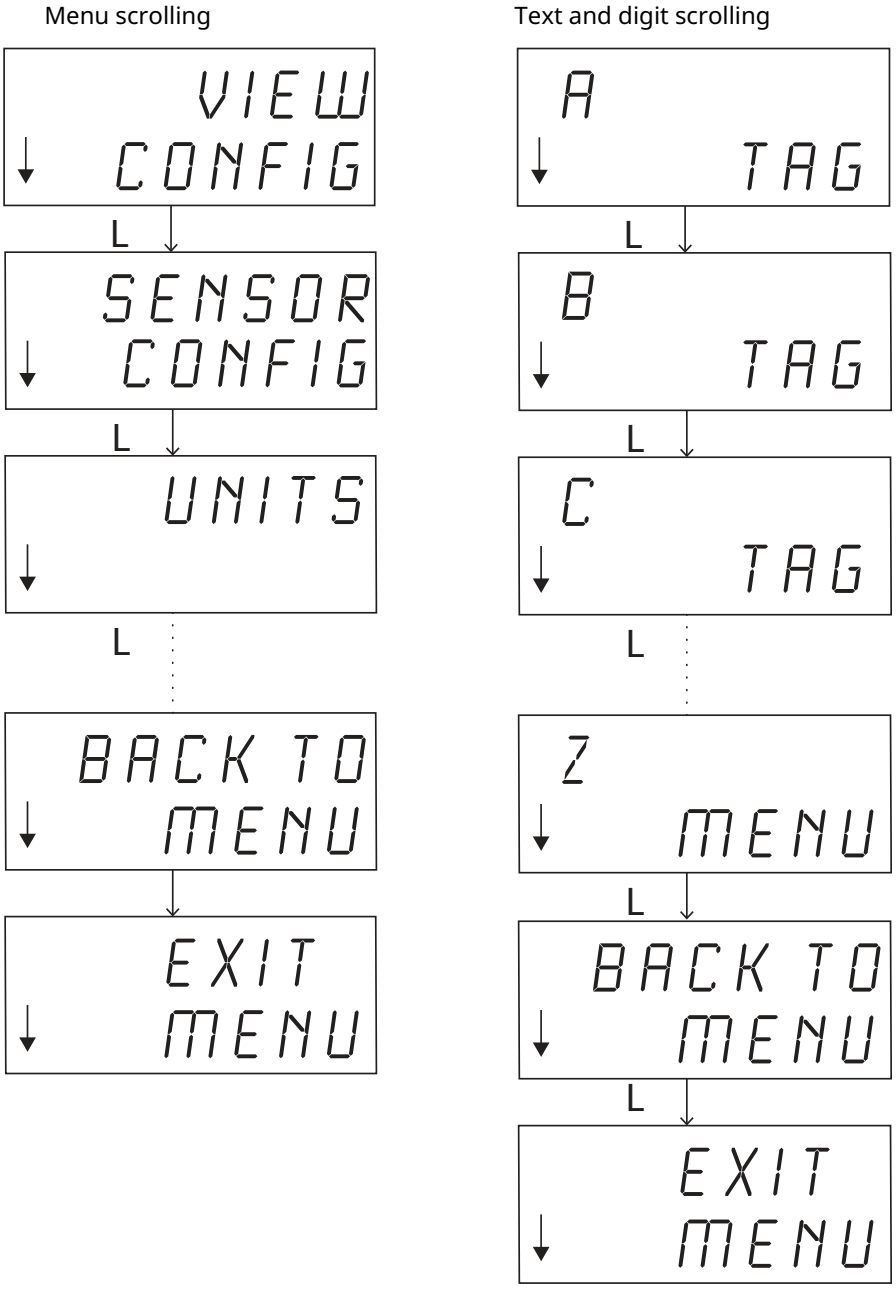

Scrolling backwards

Moving backwards during digit or text entry was described above in Digit Entry "Usage Notes". During regular menu navigation it is possible to go back to the previous screen by pressing both buttons at the same time.

Figure C-3: Scrolling backwards

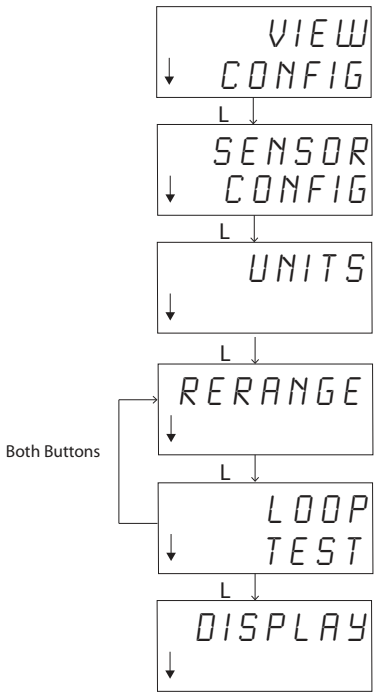

C.3 Timeout

The LOI in standard operation will Time Out and return to the home screen after 15 minutes of inactivity. To re-enter into the LOI menu, press either button.

C.4 Saving and canceling

The Save and Cancel functionality implemented at the end of a series of steps allows the user to save the change or exit the function without saving any of the changes. The way these functions are shown should always look as follows:

Saving

Whether you're choosing a setting from a list of choices or entering digits or text the first screen shall show "SAVE?" to ask the user if they want to save the information just entered. You can select the cancel function (choose NO) or the save function (choose YES). After the save function is selected, "SAVED" shall appear on the screen.

Figure C-4: Saving a Setting

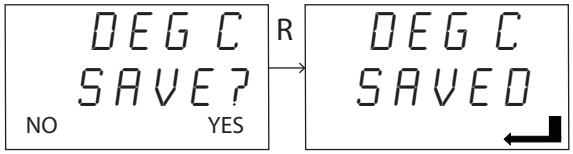

Figure C-5: Saving Text or Values

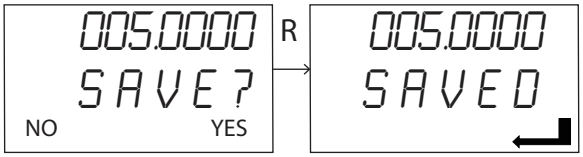

Canceling

When a value or text string is being entered into the transmitter via the LOI and the function is canceled, the LOI menu can offer the user a means to re-enter the value without losing the information entered. Examples of a value being entered are the Tag, Damping, and Calibration values. If you do not want to re-enter the value and desire to continue canceling, select the NO option when prompted.

Figure C-6: Canceling

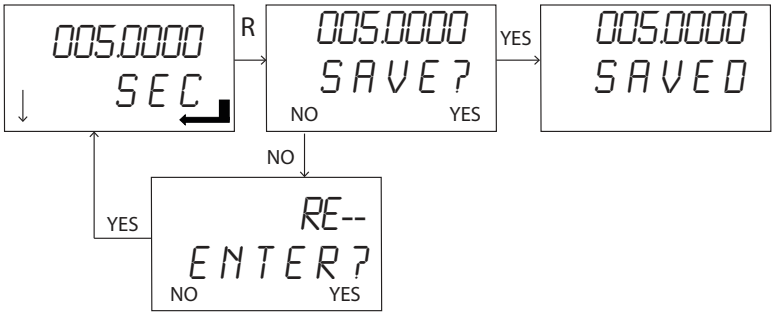

C.5 LOI menu tree

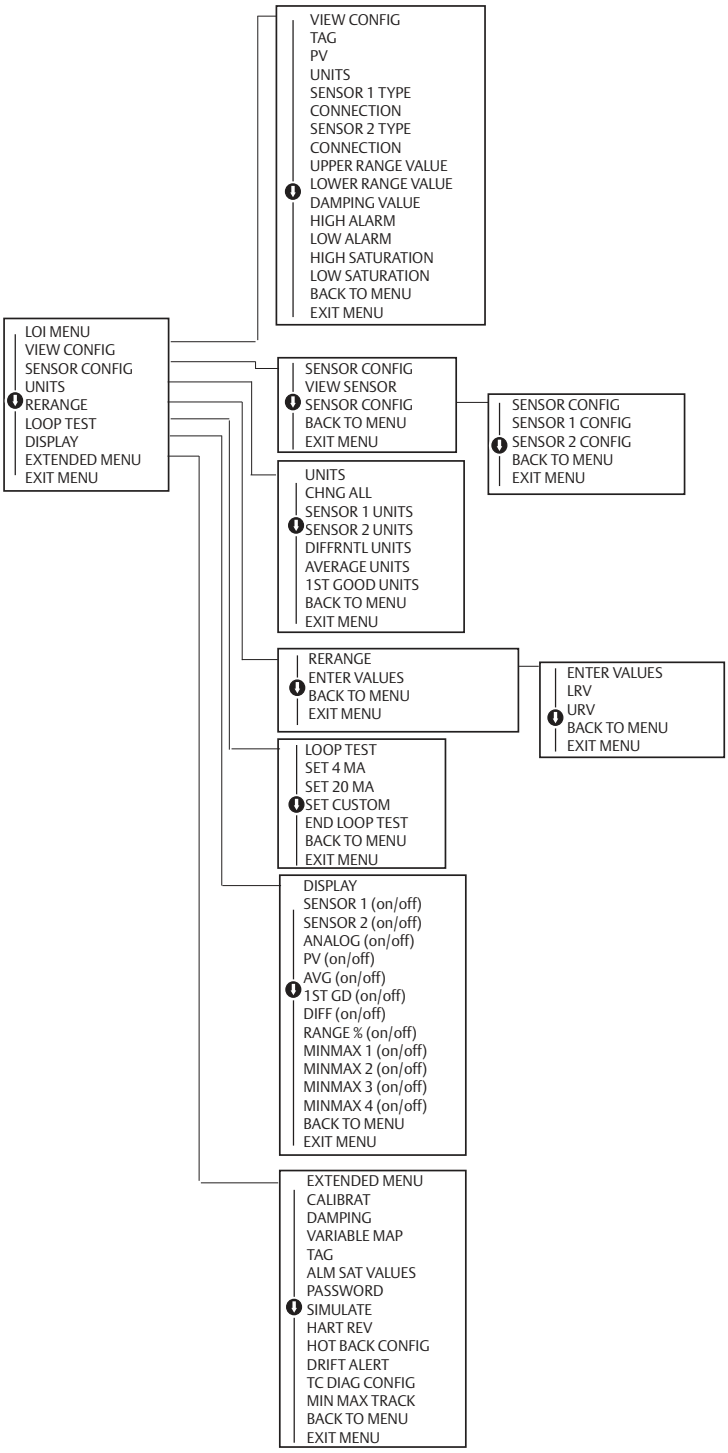

C.6 LOI menu tree – extended menu

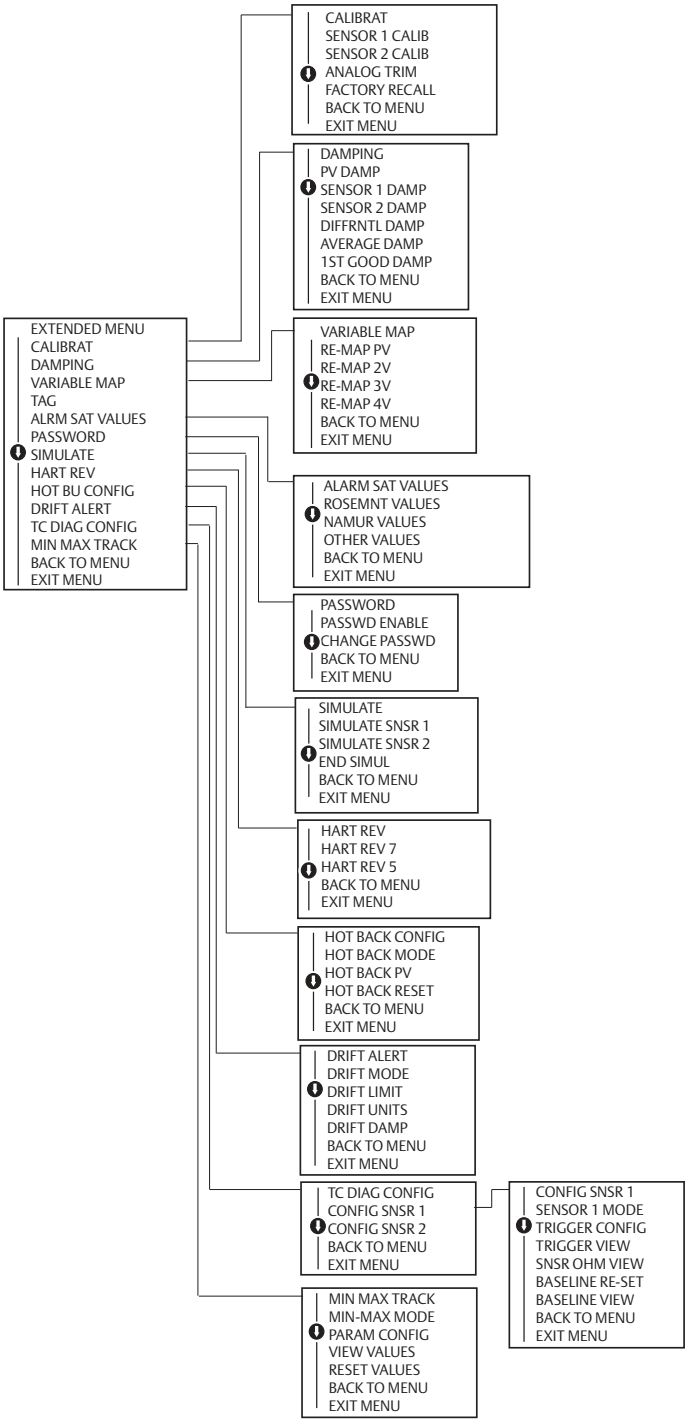

00809-0200-4728
Rev. SF
2023

For more information: **Emerson.com**

©2023 Emerson. All rights reserved.

Emerson Terms and Conditions of Sale are available upon request. The Emerson logo is a trademark and service mark of Emerson Electric Co. Rosemount is a mark of one of the Emerson family of companies. All other marks are the property of their respective owners.

ROSEMOUNT™

EMERSON™