Product Data Sheet
00813-0100-4045, Rev EF
May 2025

Rosemount™ Wireless Pressure Gauge

with *Wireless*HART® Protocol



The Rosemount Wireless Pressure Gauge from Emerson utilizes industry-proven pressure sensor technology to deliver accurate and reliable pressure information. It features up to 150x overpressure protection and two layers of process isolation providing a safer field environment. Rosemount sensor technology eliminates many gauge challenges by replacing mechanical parts that inhibit traditional gauges from reporting or displaying the correct pressure. This gauge features a large 4.5 in. (114 mm) face for easy field visibility. It has up to a 10-year installed life, reducing costs, and time involved with maintenance.

ROSEMOUNT™

EMERSON™

Product benefits

Meet traditional gauge requirements

- ±0.5 percent of span nominal accuracy (aligns with ASME B40.1 Grade 2A)
- NPT, DIN, manifold, level flange, and remote seal process connections
- Gauge, absolute, vacuum, compound, and mirror measurement types
- Scale ranges from 15 inH_2O (37.3 mbar) to 10000 psi (689.5 bar)

Reduce maintenance challenges

- Get up to 10 years of reliable readings through industry-proven Rosemount pressure sensor technology.
- Reduce common mechanical gauge failures caused by vibration, overpressure, and other environmental factors.
- Have confidence in pressure gauge health with local indicator light.

Improve personnel safety

- Keep people out of hazardous areas by minimizing operator rounds.
- Gain peace of mind with overpressure ratings from 1.5x to 150x and two layers of process isolation.

Contents

Product benefits..... 2
Ordering information..... 4
Specifications..... 14
Product certifications..... 18
Dimensional drawings..... 22

Access pressure data continuously

- Gets accurate readings as frequently as once per minute with *Wireless*HART® technology.
- View pressure reading locally with large 4.5 in. (114 mm) dial.

Access information when you need it with asset tags

Newly shipped devices include a unique QR code asset tag that enables you to access serialized information directly from the device. With this capability, you can:

- Access device drawings, diagrams, technical documentation, and troubleshooting information in your MyEmerson account.
- Improve mean time to repair and maintain efficiency.
- Ensure confidence that you have located the correct device.
- Eliminate the time-consuming process of locating and transcribing nameplates to view asset information.

Ordering information

CONFIGURE > VIEW PRODUCT >

Online product configurator

Many products are configurable online using our Product Configurator. Select the **Configure** button or visit our www.Emerson.com to start. With this tool's built-in logic and continuous validation, you can configure your products more quickly and accurately.

Specifications and options

The purchaser of the equipment must specify and select the product materials, options, and components.

Optimizing lead time

The starred offerings (★) represent the most common options and should be selected for the fastest delivery. The non-starred offerings are subject to additional delivery lead time.

Required model components

Model

Code	Description	
WPG	Wireless Pressure Gauge	★

Dial size

Code	Description	
45	4.5 in. (114.3 mm)	★
00	4.5 in. (114.3 mm) Wireless output only (no dial)	

Gauge ouput

Code	Description	
X	Wireless with user-configurable update rate, 2.4 GHz DSSS, *Wireless*HART®	★

Product certifications

Code	Description	
I1	ATEX Intrinsic Safety	★
I2	INMETRO Intrinsic Safety	★
I4	TIIS Intrinsic Safety	★
I5	US Intrinsically Safe	★
I6	Canada Intrinsically Safe	★
I7	IECEx Intrinsic Safety	★
IP	Korea Intrinsic Safety	
IM	Technical Regulations Customs Union (EAC) Intrinsic Safety	★
NA	No approval	★

Measurement type

Code	Description	
G	Gage	★
A	Absolute	★
C	Compound	★
V	Vacuum	★
M	Mirror	★

Process connection style

Materials of construction comply with recommendations per NACE® MR0175/ISO 15156 for sour oil field production environments. Environmental limits apply to certain materials. Consult latest standard for details. Selected materials also conform to NACE MR0103 for sour refining environments.

Code	Connection style	Isolating diaphragm material	
11	½-14 NPT male	316L SST	★
12	½-14 NPT male	Alloy C-276	★
17	½-14 NPT male	Gold-plated 316 stainless steel	
21	G½ male (EN 837)	316L SST	★
22	G½ male (EN 837)	Alloy C-276	★
27	G½ male (EN 837)	Gold-plated 316 stainless steel	
31(1)	¾-14 NPT male	316L SST	
32(1)	¾-14 NPT male	Alloy C-276	
61(1)	Non-threaded instrument flange	316L SST	
71(1)(2)	Tube connection	316L SST	
01	Alternate process conection	316L SST	★

(1) *Not available with scale ranges greater than 4000 psi.*
(2) *Only available with product certification codes I1 and I7.*

Primary engineering unit

Code	Description	
A	psi	★
B	kPa	★
D	bar	★
E	mBar	★
F(1)	MPa	★
G	inH_2O	★
H	kg/cm^2	★
I	ftH_2O	
J	mmH_2O	
K	inHg	★
L	cmH_2O	★
M	cmHg	★
N	mmHg	★
P(1)(2)	Percent of range (% of range)	★

(1) *Not available with measurement type mirror.*
(2) *Not available with measurement type compound and measurement type vacuum.*

Scale ranges

Six-digit, configurable, numerical value (e.g. 000100 for an upper scale range of 100 with selected primary engineering unit).

Reference tables in Pressure scale ranges section for scale ranges by engineering unit. A total of six digits must be selected to form a valid model code.

Additional options

Scale range (decimal)

Code	Description	
D20	0.2	★
D40	0.4	★
D50	0.5	★
D60	0.6	★

Secondary engineering unit

Code	Description	
DA(1)	psi	★
DB(1)	kPa	★
DD(1)	bar	★
DH(1)	kg/cm^2	★
DC(2)(3)(4)(5)	Custom units	

(1) *Not available with Primary engineering unit "P" (percent of range).*
(2) *Not available with measurement type Compound.*
(3) *Not available with measurement type Vacuum.*
(4) *Requires Primary engineering unit of "A" (psi), "D" (bar), or "G" (inH_2O).*
(5) *Requires Custom configuration model code "C1".*

High pressure applications

NOTICE
This option is required with any specified pressure range over 4,001 psi (275.9 bar)

Code	Description	
P5	Maximum operating pressure of 4,001 - 10,000 PSI (275.9 - 689.5 bar)	

Manifold assemblies

This option requires Process connection style style "11", "12", or "17".

Integrated manifold and Diaphragm seal assembly cannot be combined.

"Assemble-to" items are specified separately and require a completed model number.

Code	Description	
S5	Assemble to Rosemount 306 Integral Manifold	

Diaphragm seal assembly

This option requires Process connection style "11".

Integrated manifold and diaphragm seal assemblies cannot be combined.

"Assemble-to" items are specified separately and require a completed model number.

Seal material and size selection are dependent on desired scale range. When selecting a seal, discuss options with your local Emerson sales representative.

Code	Description	
S1	Assemble to one Rosemount 1199 Diaphragm Seal	

Extended product warranty

Code	Description	
WR3	3-year limited warranty	★
WR5	5-year limited warranty	★

Mounting bracket

Code	Description	
B4	Bracket for 2-in. pipe or panel mounting, all SST	★
BE	316L SST B4-style bracket with 316L SST bolting	★

Stainless steel tagging

Code	Description	
Y2	316L SST wire-on tag	★

Custom configuration

Code	Description	
C1	Custom configuration	★

Calibration certification

Code	Description	
Q4	Calibration certificate	★

Material traceability certification

Code	Description	
Q8	Material traceability certification per EN 10204 3.1	★

Positive Material Identification (PMI)

Code	Description	
Q76	PMI verification and certificate	★

NACE certificate

Code	Description	
Q15	Certificate of compliance to NACE® MR0175/ISO 15156 for wetted materials	★
Q25	Certificate of compliance to NACE® MR0103 for wetted materials	★

Pressure testing

Code	Description	
P1	Hydrostatic testing with certificate	★

Cleaning process area

Code	Description	
P2	Cleaning for special services	★

Surface finish

This option requires diaphragm seal assembly “S1”.

Code	Description	
Q16	Surface finish certificate for sanitary remote seals	★

Normal range indication

Code	Description	
LK	Green, yellow, and red sticker kit	★

Alternate process connection

This option requires Process connection style style “01”.

Code	Description	
P01	Level flange (SST), 1 in. ANSI Class 150	
P02	Level flange (SST), 1 in. ANSI Class 300	
P11	Level flange (SST), 2 in. ANSI Class 150	
P12	Level flange (SST), 2 in. ANSI Class 300	
P21	Level flange (SST), 3 in. ANSI Class 150	
P22	Level flange (SST), 3 in. ANSI Class 300	
P31	Level flange (SST), DIN-DN 50 PN 40	
P41	Level flange (SST), DIN-DN 80 PN 40	
W01	Level flange (SST), 1 in. ANSI Class 150, All welded construction	
W02	Level flange (SST), 1 in. ANSI Class 300, All welded construction	
W11	Level flange (SST), 2 in. ANSI Class 150, All welded construction	
W12	Level flange (SST), 2 in. ANSI Class 300, All welded construction	
W21	Level flange (SST), 3 in. ANSI Class 150, All welded construction	
W22	Level flange (SST), 3 in. ANSI Class 300, All welded construction	

Code	Description	
W31	Level flange (SST), DIN-DN 50 PN 40, All welded construction	
W41	Level flange (SST), DIN-DN 80 PN 40, All welded construction	

Pressure scale ranges

Values shown represent maximum and minimum available scale range values for each unit of measurement. Users may specify any upper range value between these max/min values. Upper range values should contain no more than two significant digits. Contact Emerson for additional information.

Table 1: Gauge Measurement Type

Primary engineering unit		Minimum scale range		Maximum scale range		Example
Code	Value	Code	Value	Code	Value	
A	Psi	000000D60	0.6	010000	10000	000100 = 0-100 Psi
B	kPa	000004	4	066000	66000	005000 = 0-5000 kPa
D	Bar	000000D20	0.2	000660	660	000020 = 0-20 bar
E	mBar	000040	40	660000	660000	004500 = 0-4500 mbar
F	MPa	000000D20	0.2	000066	66	00006D40 = 0-6.4 MPa
G	inH_2O	000015	15	270000	270000	0-80000 inH_2O
H	kg/cm^2	000000D20	0.2	000700	700	000060 = 0-60 kg/cm^2
I	ftH_2O	000001D40	1.4	022000	22000	000250 = 0-250 ftH_2O
J	mmH_2O	000400	400	900000	900000	0-16000 mmH_2O
K	inHg	000001D20	1.2	020000	20000	003500 = 0-3500 inHg
L	cmH_2O	000040	40	700000	700000	050000 = 0-50000 cmH_2O
M	cmHg	000003	3	050000	50000	000030 = 0-30 cmHg
N	mmHg	000028	28	500000	500000	048000 = 0-48000 mmHg

Table 2: Absolute Measurement Type

Primary engineering unit		Minimum scale range		Maximum scale range		Example
Code	Value	Code	Value	Code	Value	
A	Psi	000005	5	010000	10000	00100 = 0-100 psi
B	kPa	000035	35	066000	66000	005000 = 0-5000 kPa
D	Bar	000000D40	0.4	000660	660	000020 = 0-20 bar
E	mBar	000350	350	660000	660000	004500 = 0-4500 mbar
F	MPa	000000D20	0.2	000066	66	00006D40 = 0-6.4 MPa
G	inH_2O	000140	140	270000	270000	080000 = 0-80000 inH_2O
H	kg/cm^2	000000D40	0.4	000700	700	000060 = 0-60 kg/cm^2
I	ftH_2O	000012	12	022000	22000	000250 = 0-250 ftH_2O
J	mmH_2O	003600	3600	900000	900000	016000 = 0-16000 mmH_2O
K	inHg	000011	11	020000	20000	003500 = 0-3500 inHg

Table 2: Absolute Measurement Type *(continued)*

L	cmH_2O	000360	360	700000	700000	050000 = 0-50000 cmH_2O
M	cmHg	000027	27	050000	50000	000030 = 0-30 cmHg
N	mmHg	000270	270	500000	500000	048000 = 0-48000 mmHg

Table 3: Percent of Range Engineering Unit

Primary engineering unit		**Scale range**	
Code	**Value**	**Code**	**Value**
P	Percent of range(1)	000030	30
		000150	150
		000800	800
		004000	4000
		010000	10000

(1) *Scale will read 0-100 percent. Code selected is representative of the desired working pressure range in psi. Only the values listed are available for order.*

Table 4: Compound Measurement Type

Primary engineering unit		**Minimum scale range**		**Maximum scale range**		**Example**
Code	**Value**	**Code**	**Value**	**Code**	**Value**	
A(1)	Psi	000001	1	000600	600	000100 = -30 inHg-100 psi
B	kPa	000035	35	002000	2000	000500 = -100-500 kPa
D	Bar	000000D20	0.2	000040	40	000020 = -1-20 bar
E	mBar	000100	100	020000	20000	004500 = -1000-4500 mbar
F	MPa	000000D20	0.2	000002	2	00001D40 = -0.1-1.4 MPa
G	inH_2O	000150	150	008000	8000	004000 = -400-4000 inH_2O
H	kg/cm^2	000000D40	0.4	000020	20	000015 = -1-15kg/cm^2
I	ftH_2O	000012	12	000600	600	000250 = -30-250 ftH_2O
J	mmH_2O	003600	3600	200000	200000	016000 = -10000-16000 mmH_2O
K	inHg	000011	11	000600	600	000350 = -30-350 inHg
L	cmH_2O	000360	360	020000	20000	000700 = -1000-700 cmH_2O
M	cmHg	000027	27	001500	1500	000030 = -75-30 cmHg
N	mmHg	000270	270	015000	15000	006000 = -750-6000 mmHg

(1) *Vacuum scale will be in inHg and positive pressure in psi. Only applies to psi.*

Table 5: Vacuum Measurement Type

Primary engineering unit		Scale range		Example
Code	**Value**	**Code**	**Value**	
A	Psi	000000	-15	-15-0 psi
B	kPa	000000	-100	-100-0 kPa
D	Bar	000000	-1	-1-0 Bar
E	mBar	000000	-1000	-1000-0 mBar
F	MPa	000000	-0.1	-0.1-0 MPa
G	inH_2O	000000	-400	-400-0 inH_2O
H	kg/cm^2	000000	-1	-1-0 kg/cm^2
I	ftH_2O	000000	-30	-30-0 ftH_2O
J	mmH_2O	000000	-10000	-10,000-0 mmH_2O
K	inHg	000000	-30	-30-0 inHg
L	cmH_2O	000000	-1000	-1000-0 cmH_2O
M	cmHg	000000	-75	-75-0 cmHg
N	mmHg	000000	-750	-750-0 mmHg

Table 6: Mirror Measurement Type

Primary engineering unit		Minimum scale range		Maximum scale range		Example
Code	**Value**	**Code**	**Value**	**Code**	**Value**	
A	Psi	000001	1	000015	15	000010 = -10–10 psi
B	kPa	000005	5	000100	100	000050 = -50–50 kPa
D	Bar	000000D20	0.2	000001	1	000000D50 = -0.5–0.5 bar
E	mBar	000050	50	001000	1000	00500 = -500–500 mbar
F	MPa	N/A	N/A	N/A	N/A	N/A
G	inH_2O	000020	20	000400	400	000200 = -200–200 inH_2O
H	kg/cm^2	000000D20	0.2	000001	1	000000D40 = -0.4–0.4 kg/cm^2
I	ftH_2O	000002	2	000030	30	000020 = -20–20 ftH_2O
J	mmH_2O	000540	540	010000	10000	001200 = -1200–1200 mmH_2O
K	inHg	000001D50	1.5	000030	30	000015 = -15–15 inHg
L	cmH_2O	000050	50	001000	1000	000450 = -450–450 cmH_2O
M	cmHG	000004	4	000075	75	000030 = -30–30 cmHg
N	mmHg	000040	40	000750	750	000300 = -300–300 mmHg

Explanation of measurement types

Gage/absolute Scale will read 0 to selected upper range value.

Vacuum	Scale will read full vacuum to 0. User must select “000000” with six-digit code.
Compound	Scale begins at full vacuum and ends above zero at selected upper range value.
Percent of range	Scale will read 0–100 percent. Code selected is representative of the desired working pressure.
Mirror	Scale will read from negative to positive with 0 at the 12:00 position. Upper and lower scale range are “mirror” integers based on selected range value.

Specifications

Physical specifications

Material selection

Emerson provides a variety of Rosemount products with various product options and configurations including materials of construction that can be expected to perform well in a wide range of applications. The Rosemount product information presented is intended as a guide for the purchaser to make an appropriate selection for the application. It is the purchaser's sole responsibility to make a careful analysis of all process parameters (such as all chemical components, temperature, pressure, flow rate, abrasives, contaminants, etc.) when specifying product materials, options, and components for the particular application. Emerson is not in a position to evaluate or guarantee the compatibility of the process fluid or other process parameters with the product options, configuration, or materials of construction selected. For more information on material compatibility, refer to the Material Selection Technical Note.

Dial size

4.5 in. (114.3 mm)

Scale ranges

From vacuum up to 10,000 psi (689.5 bar)

Scale ranges less than 40 inH_2O (0.01 bar) only available in gage measurement

Single scale considerations

The number of major graduations is a direct result of the specified combination of primary engineering unit and scale range.

Dual scale considerations

The number of major graduations on the inner scale is the direct result of the combination of primary engineering unit and secondary engineering unit.

Process connections

½-14 NPT male, ¾-14 NPT male, G½ male (EN 837), non-threaded instrument flange, and alternate process connections.

Field Communicator connections

Communication terminals are accessible by removing cover.

Material of construction

Housing

Engineered polymer, NEMA® 4X and IP66/67

Cover O-ring

Silicone rubber

Process-wetted parts

316L SST, Alloy C-276

Gold-plated 316 SST

Shipping weight

1.8 lb, (0.82 kg)

Options

- Mounting bracket (Code B4): 1.0 lb (0.5 kg)
- Normal Range Indication (Code LK): 0.02 lb (11 g)
- Rosemount 1199 Seal Systems: Reference the Rosemount DP Level Product Data Sheet for shipping weights.
- Rosemount 306 Integrated Manifolds: Reference the Rosemount Manifolds Product Data Sheet for shipping weights.

Operating specifications

Accuracy

±0.5 percent of span nominal accuracy

±1.0 percent of span nominal accuracy for spans less than 40 inH_2O

Temperature limits

Ambient

–40°F to +185°F (–40°C to +85°C)

Storage

–40°F to +185°F (–40°C to +85°C)

Process

–40°F to +250°F (–40°C to +121°C)

Note

Process temperatures above 185°F (85°C) require de-rating the ambient limits by a 1.5:1 ratio.

220°F (104°C) limit in vacuum service; 130 °F (54°C) for pressures below 0.5 psia.

Options

Normal range indication (Code LK)

Ambient	–40°F to +185°F (–40°C to +85°C)
Storage	70°F (21°C)
Application	Minimum of 50°F (10°C)

Electrical connections/battery

The Rosemount Wireless Pressure Gauge has a replaceable, non-rechargeable, 3.6 V primary cell, lithium-thionyl chloride battery.

A battery at reference conditions has a lifespan of 10 years. Gauges with a span of less than five psi will experience a decrease in battery life. Low-pressure range gauges can be more susceptible to environmental effects.

Note

Reference conditions for the pressure gauge are 70°F (21°C), stable operating pressure with periodic changes, transmit rate of once per minute, and routing data for three additional network devices.

Overpressure limit

Scale range	Maximum working pressure	Maximum overpressure limit
0.55–30 psi (0.038–2 bar)	30 psi (2 bar)	750 psi (51.7 bar)
31–150 psi (2.1–10.3 bar)	150 psi (10.3 bar)	1,500 psi (103.4 bar)
151–800 psi (10.4–55.1 bar)	800 psi (55.1 bar)	1,600 psi (110.3 bar)
801–4,000 psi (55.2–275.8 bar)	4,000 psi (275.8 bar)	6,000 psi (413.7 bar)
4,001-10,000 psi (275.8–689.5 bar)	10,000 psi (689.5 bar)	15,000 psi (1034 bar)

Burst pressure limit

For scale ranges 4,000 psi (275.8 bar) or less: 11,000 psi (758.4 bar)

For scale ranges greater than 4,000 psi (275.8 bar): 26,000 psi (1792.3 bar)

Minimum span limits for percent of range engineering unit

The pressure gauge represents the pressure as a percent. You can modify the representative scale range to better accommodate your application. By default, "100" represents the maximum pressure limit.

Code	Maximum scale range	Scale range for 0.5% of span accuracy	Scale range for 1.0% of span accuracy
000030	30 psi	30–5 psi	4.99–3 psi
000150	150 psi	150–25 psi	24.99–15 psi
000800	800 psi	800–134 psi	133.99–80 psi
004000	4000 psi	4000–667 psi	666.99–400 psi
010000	10,000 psi	10,000–2,000 psi	N/A

Ambient temperature effect per 18°F (10°C)

Scale range	Ambient temperature effect
Wireless pressure gauge	
60 inH_2O (0.15 bar) to 10,000 psi (689.5 bar)	±0.3% of span
Wireless pressure gauge with remote seal	
Up to 10,000 psi (689.5 bar)	See Instrument Toolkit™ software.

Digital zero trim

Digital zero trim is an offset adjustment to compensate for mounting position effects (up to 5 percent of span).

Humidity limits

0-95 percent relative humidity

Electromagnetic compatibility (EMC)

Meets all industrial environment requirements specified by the EN 61326 and NAMUR NE-21 electromagnetic compatibility (EMC) requirements. During an EMC event, the maximum scale range deviation is <1 percent for scale ranges greater than five psi. For scale ranges less than five psi, the maximum deviation <10 precent.

Note
During an ESD event, the pressure gauge may exceed the maximum EMC deviation limit or reset, however, device will self-recover and return to normal operation within specified start-up time.

Status indication

Device status is indicated by local LED. Reference the Rosemount Smart Pressure Gauge for further detail.

Output

IEC 62591 (*Wireless*HART), 2.4 GHz DSSS

Wireless radio (internal antenna)

- Frequency: 2.400 – 2.480 GHz
- Channels: 15
- Modulation: IEEE 802.15.4 compliant DSSS
- Transmission: Maximum of 10 dBm EIRP
- Integrated omni-directional antenna

Wireless update rate

Wireless update rate is user-selectable from one minute to 60 minutes and is separate from local display. When wireless is activated, the update rate defaults to once a minute.

Dial update rate

Dial update rate is user-selectable from 2 seconds (fast) to 4 seconds (normal). By default, the update rate is set to 4 seconds but can be changed using standard configuration tools.

Vibration effect

No significant effect when tested per IEC61298-3 or ASME B40.1 requirements

IEC61298-3 field or pipeline with high vibration level: 10–1000 Hz 0.35 mm displacement peak amplitude 5 g

Wireless connectivity out of the box

Products in order	Network ID and Join Key are generated	Wireless connectivity out of the box
Rosemount Wireless Pressure Gauge	Automatically	Manual activation required
Rosemount Wireless Pressure Gauge	Customer specified	Activated
Rosemount Wireless Pressure Gauge and Emerson Wireless Gateway	Automatically (matching)	Manual activation required

Product certifications

Rev. 4.0

European directive information

A copy of the EU Declaration of Conformity can be found at the end of the Quick Start Guide. The most recent revision of the EU Declaration of Conformity can be found at Emerson.com/Rosemount.

Telecommunication compliance

All wireless devices require certification to ensure that they adhere to regulations regarding the use of the RF spectrum. Nearly every country requires this type of product certification. Emerson™ is working with governmental agencies around the world to supply fully compliant products and remove the risk of violating country directives or laws governing wireless device usage.

FCC and IC

This device complies with Part 15 of the FCC Rules. Operation is subject to the following conditions: These devices may not cause harmful interference, these devices must accept any interference received, including interference that may cause undesired operation. This device must be installed to ensure a minimum antenna separation distance of 20 cm from all persons. This device complies with Industry Canada license-exempt RSS-247. Operation is subject to the following two conditions: (1) this device may not cause interference, and (2) this device must accept any interference, including interference that may cause undesired operation of the device.

Changes or modification to the equipment not expressly approved by Emerson could void the user's authority to operate the equipment.

Cet appareil est conforme à la Partie 15 de la réglementation FCC. Son fonctionnement est soumis aux conditions suivantes: Cet appareil ne doit pas causer d'interférences nuisibles. Cet appareil doit accepter toute interférence reçue, incluant toute interférence pouvant causer un fonctionnement indésirable. Cet appareil doit être installé pour assurer une distance minimum de l'antenne de séparation de 20 cm de toute personne. Cet appareil est conforme à la norme RSS-247 Industrie Canada exempt de licence. Son fonctionnement est soumis aux deux conditions suivantes: (1) cet appareil ne doit pas provoquer d'interférences et (2) cet appareil doit accepter toute interférence, y compris les interférences pouvant causer un mauvais fonctionnement du dispositif. Les changements ou les modifications apportés à l'équipement qui n'est pas expressément approuvé par Rousemount Incpourraient annuler l'autorité de l'utilisateur à utiliser cet équipement.

Ordinary location certification from CSA

The product has been examined and tested to determine that the design meets the basic electrical, mechanical, and fire protection requirements by CSA, a nationally recognized test laboratory (NRTL) as accredited by the Federal Occupational Safety and Health Administration (OSHA).

Installing in North America

The US National Electrical Code (NEC®) and the Canadian Electrical Code (CEC) permit the use of Division marked equipment in Zones and Zone marked equipment in Divisions. The markings must be suitable for the area classification, gas, and temperature class. This information is clearly defined in the respective codes.

USA

I5 U.S.A. Intrinsically Safe

Certificate:	[CSA] 70047656
Markings:	IS Class I, Division 1, Groups A, B, C, D T4 Class I, Zone 0, AEx ia IIC T4 Ga; (-40 °C ≤ Ta ≤ +70 °C) INSTALL PER 00G45-1020 Enclosure Type 4X IP66 / 67

Special Conditions for Safe Use (X):

1. Do not replace battery when explosive atmosphere is present.
2. Use only 00G45-9000-0001 batteries.
3. The surface resistivity of the housing is greater than 1 GΩ. To avoid electrostatic charge build-up, it must not be rubbed or cleaned with solvents or a dry cloth.
4. Substitution of components may impair intrinsic safety.

Canada

I6 Canada Intrinsically Safe (IS)

Certificate:	[CSA] 70047656
Markings:	IS Class I, Division 1, Groups A, B, C, D T4 Ex ia IIC T4 Ga (-40 °C ≤ Ta ≤ +70 °C) INSTALL PER 00G45-1020 Enclosure Type 4X IP66 / 67

Special Conditions for Safe Use (X):

1. Do not replace battery when explosive atmosphere is present.
   Ne pas remplacer les accumulateurs si une atmosphère explosive peut être présente.
2. Use only 00G45-9000-0001 batteries.
   Utiliser uniquement des accumulateurs 00G45-9000-0001.
3. The surface resistivity of the housing is greater than 1G Ω. To avoid electrostatic charge build-up, it must not be rubbed or cleaned with solvents or a dry cloth.
   La résistivité de surface du boÎtier est supérieure à un gigaohm. Pour éviter l’accumulation de charge électrostatique, ne pas frotter ou nettoyer avec des produits solvants ou un chiffon sec.
4. Substitution of components may impair intrinsic safety.
   La substitution de composants peut compromettre la sécurité intrinsèque.

Europe

I1 ATEX Intrinsic Safety

Certificate:	Baseefa16ATEX0005X
Markings:	Ⓔx II 1 G Ex ia IIC T4 Ga (-40 °C ≤ Ta ≤ +70 °C) IP66 / 67

Special Conditions for Safe Use (X):

1. The plastic enclosure may constitute a potential electrostatic ignition risk and must not be rubbed or cleaned with a dry cloth.
2. The measured capacitance between the equipment enclosure and metallic inline sensor module is 4.7 pF. This must be considered only when the WPG is integrated into a system where the process connection is not grounded.
3. Do not change the battery when an explosive atmosphere is present.
4. Only replace battery with Rosemount Part No. 00G45-9000-0001.

International

I7 IECEx Intrinsic Safety

Certificate:	IECEx BAS 16.0012X
Markings:	Ex ia IIC T4 Ga (-40 °C ≤ T_a ≤ +70 °C) IP66 / 67

Special Conditions for Safe Use (X):

1. The plastic may constitute a potential electrostatic ignition risk and must not be rubbed or cleaned with a dry cloth.
2. The measured capacitance between the equipment enclosure and metallic inline sensor module is 4.7 pF. This must be considered only when the WPG is integrated into a system where the process connection is not grounded.
3. Do not change the battery when an explosive atmosphere is present.
4. Only replace battery with Rosemount Part No. 00G45-9000-0001.

Brazil

I2 Brazil Intrinsic Safety

Certificate:	UL-BR 16.0826X
Standards:	ABNT NBR IEC 60079-0: 2008 + Errata 1:2011 ABNT NBR IEC 60079-11: 2009
Markings:	Ex ia IIC T4 Ga (-40 °C ≤ T_a ≤ +70 °C)

Specific Condition for Safe Use (X):

See certificate for Specific Conditions.

Japan

I4 Japan Intrinsic Safety

Certificate:	CML18JPN2350X
Markings:	Ex ia IIC T4 Ga (-40 °C ≤ T_a ≤ +70 °C)

Specific Condition for Safe Use (X):

See certificate for Specific Conditions.

Korea

IP Korea Intrinsic Safety

Certificates:	16-KA4BO-0540X 24-KA4BO-0237X
Markings:	Ex ia IIC T4 Ga (-40°C ≤ Ta ≤ +70°C)

Specific Condition for Safe Use (X):

See certificate for Specific Conditions.

EAC - Belarus, Kazakhstan, Russia

IM Technical Regulation Customs Union (EAC) Intrinsic Safety

Certificate:	TC RU C-US.AA87.B.00372
Markings:	0Ex ia IIC T4 Ga X, T4 (-40 °C ≤ T_a ≤ +70 °C) IP66/67;

Special Condition for Safe Use (X):

See certificate for special condition.

Dimensional drawings

Figure 1: Rosemount Wireless Pressure Gauge with ½-14 NPT Male or G½ Male Process Connection

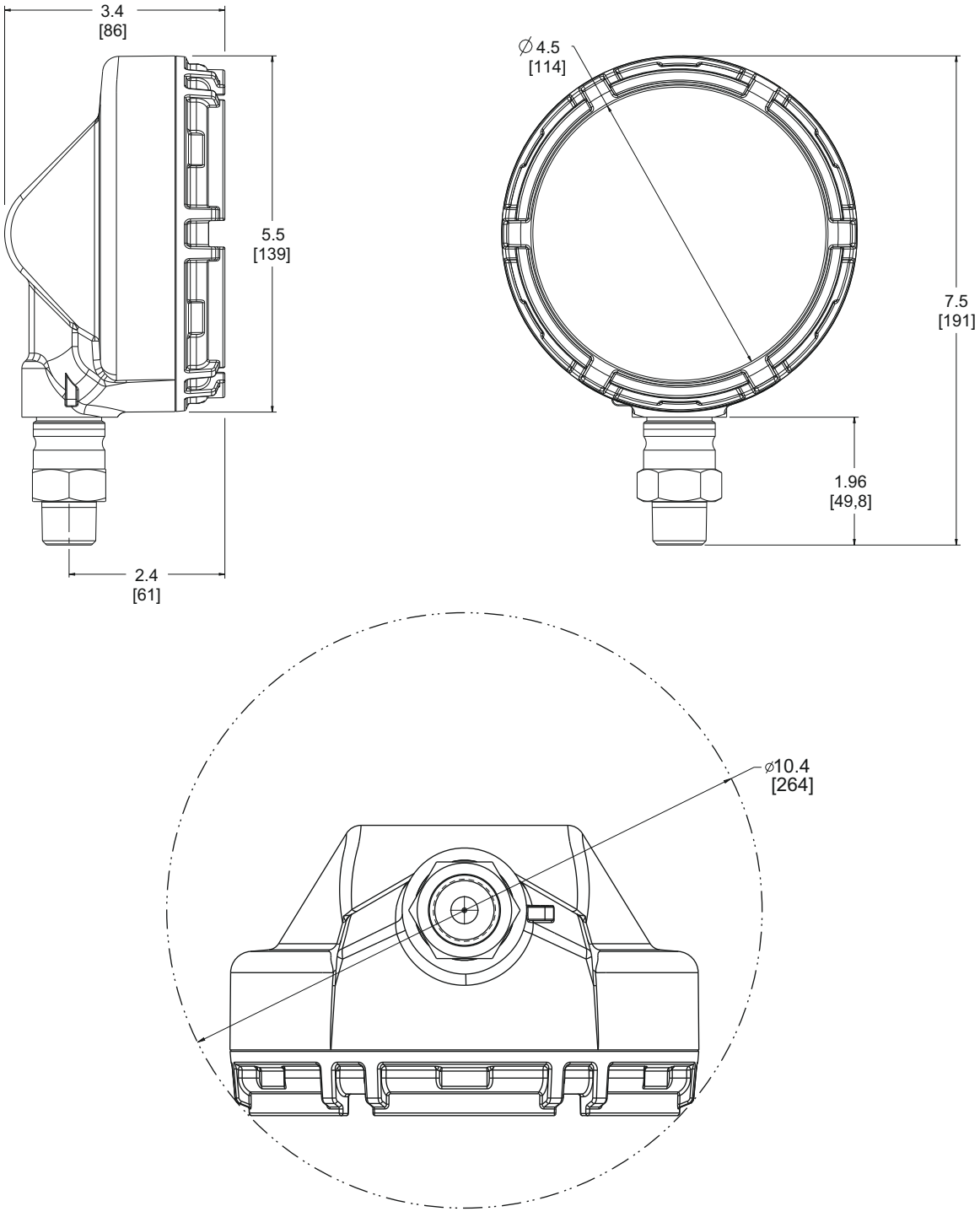

Dimensions are in inches (millimeters).

Figure 2: Rosemount Wireless Pressure Gauge with ¾-14 NPT Male Process Connection

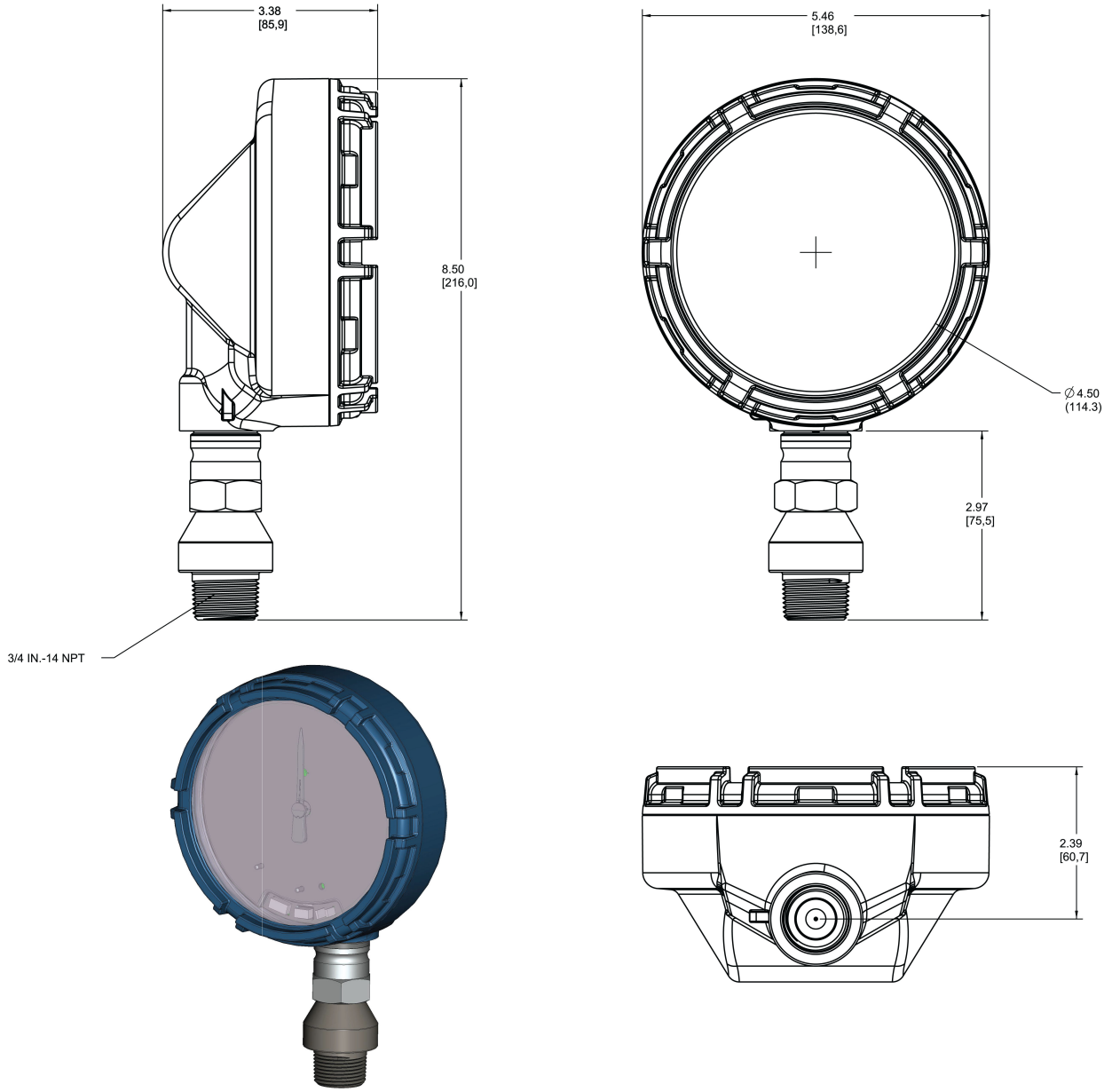

Dimensions are in inches (millimeters).

Figure 3: I-Flange Process Connection

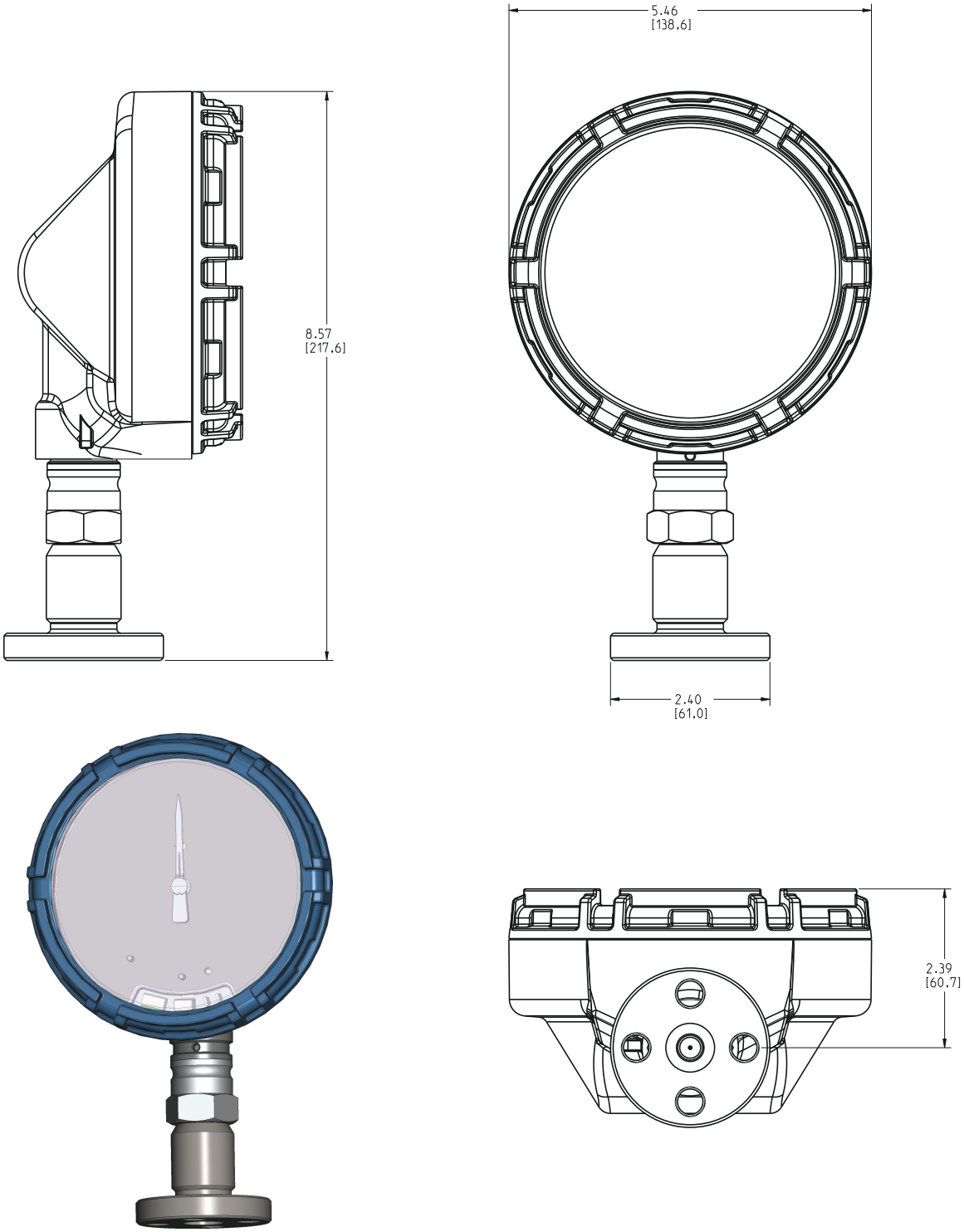

Dimensions are in inches (millimeters).

Figure 4: Tube Process Connection

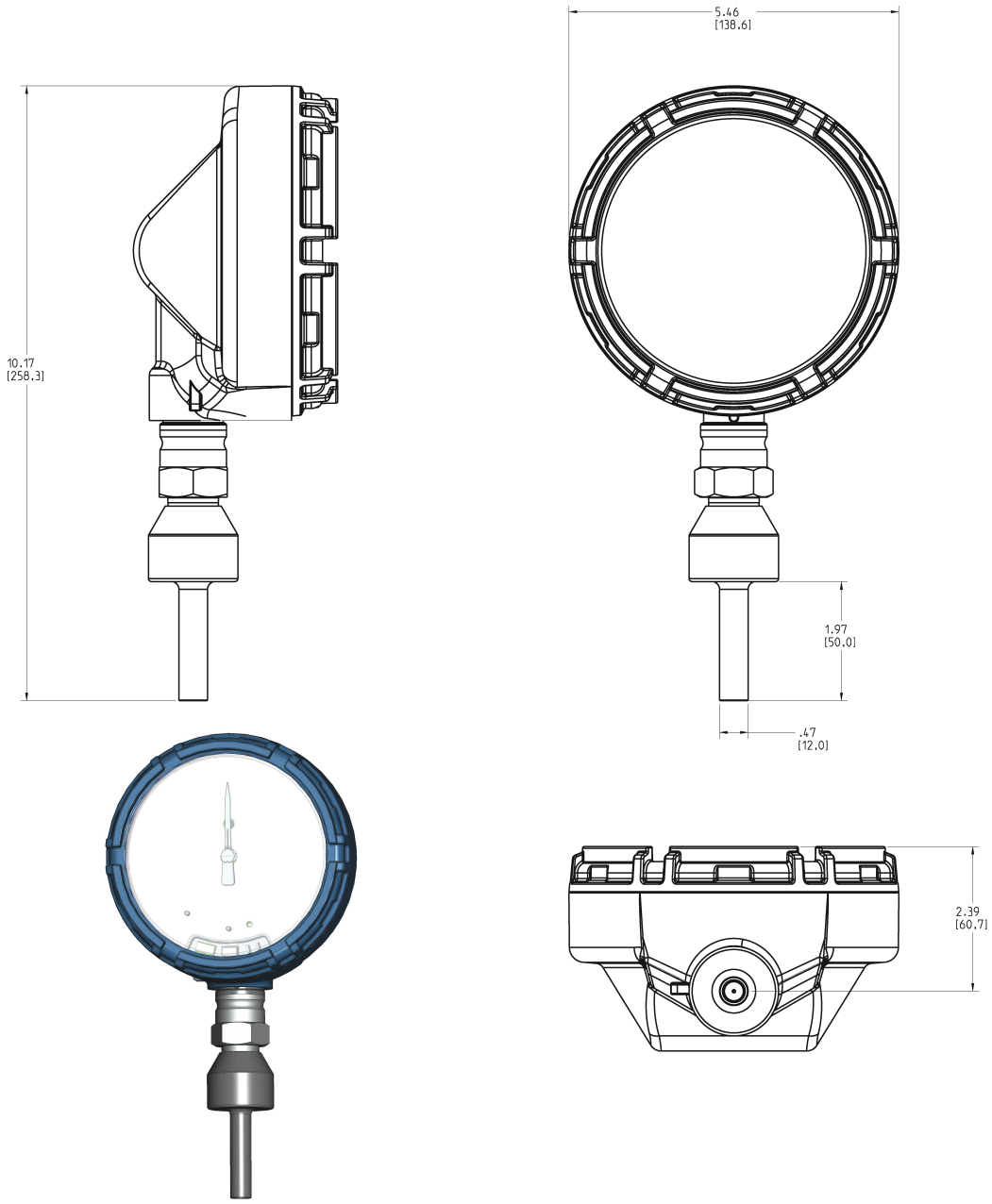

Dimensions are in inches (millimeters).

Figure 5: Mounting Configurations (B4 bracket)

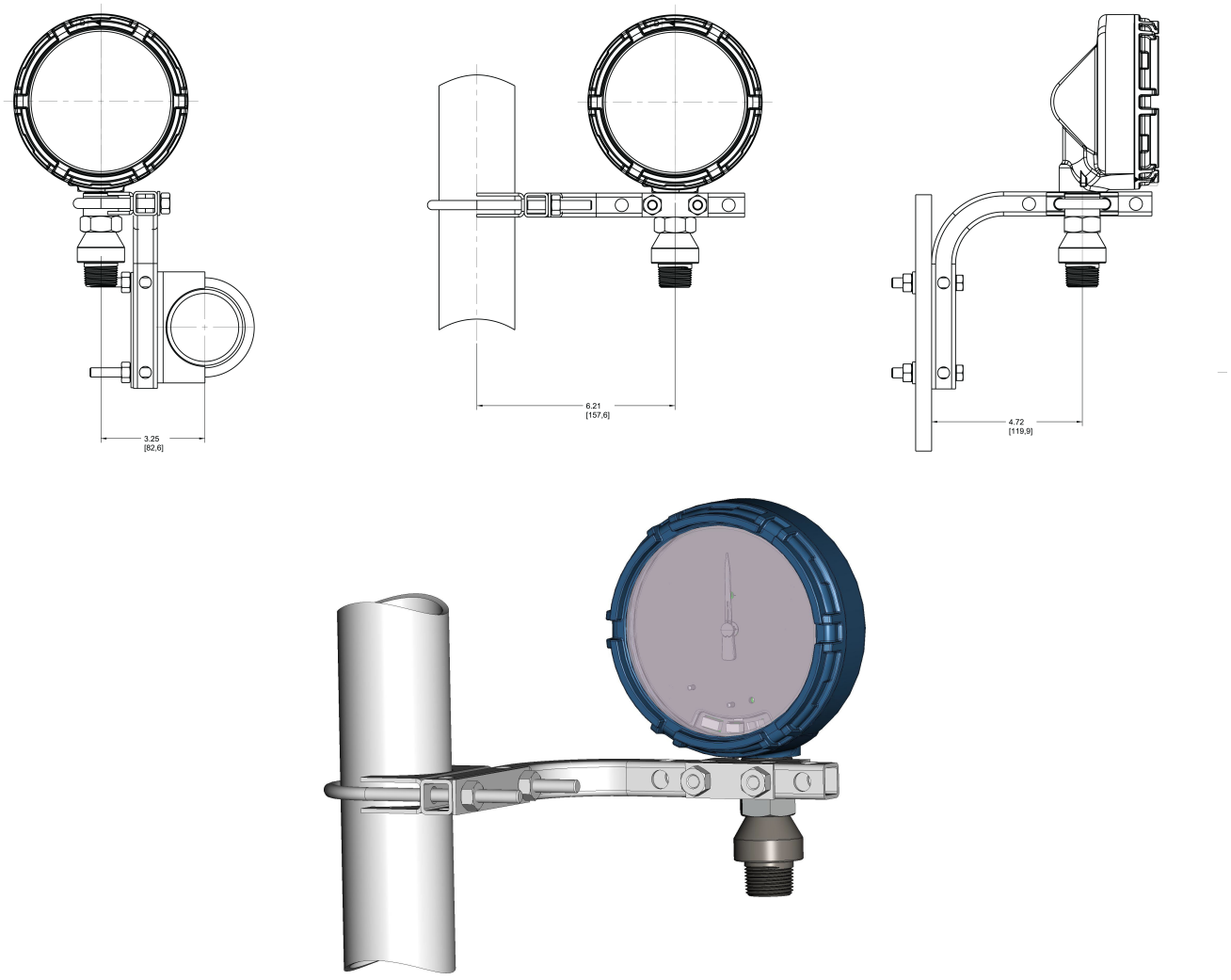

Dimensions are in inches (millimeters).

00813-0100-4045
Rev. EF
May 2025

For more information: **Emerson.com/global**

©2025 Emerson. All rights reserved.

Emerson Terms and Conditions of Sale are available upon request. The Emerson logo is a trademark and service mark of Emerson Electric Co. Rosemount is a mark of one of the Emerson family of companies. All other marks are the property of their respective owners.

ROSEMOUNT™

EMERSON™