Quick Start Guide
00825-0100-4686, Rev FA
September 2017

Rosemount™ 1195 Integral Orifice Assembly



EMERSON

NOTICE

This document provides basic installation guidelines for the Rosemount1195 Integral Orifice Assembly. For comprehensive instructions for detailed configuration, diagnostics, maintenance, service, installation, or troubleshooting refer to the Rosemount 1195 Reference Manual. The manual and this guide are also available electronically on EmersonProcess.com/Rosemount.

If the Rosemount 1195 Integral Orifice was ordered assembled to a Rosemount Pressure Transmitter, refer to the following Quick Start Guides for information on configuration and hazardous locations certifications:

- Rosemount 3051S Quick Start Guide
- Rosemount 3051SMV Quick Start Guide
- Rosemount 3051 Quick Start Guide

⚠WARNING

Process leaks may cause harm or result in death

To avoid process leaks, only use gaskets designed to seal with the corresponding flange and O-rings to seal process connections.

Contents

Rosemount 1195 Integral Orifice Assembly View . . . . . page 3
Location and orientation . . . . . page 3
Primary element orientation . . . . . page 6
Primary element installation . . . . . page 8
Preparing for operation . . . . . page 10
Product certifications . . . . . page 14

1.0 Rosemount 1195 Integral Orifice Assembly View

Figure 1. Enhanced Support Body(1)

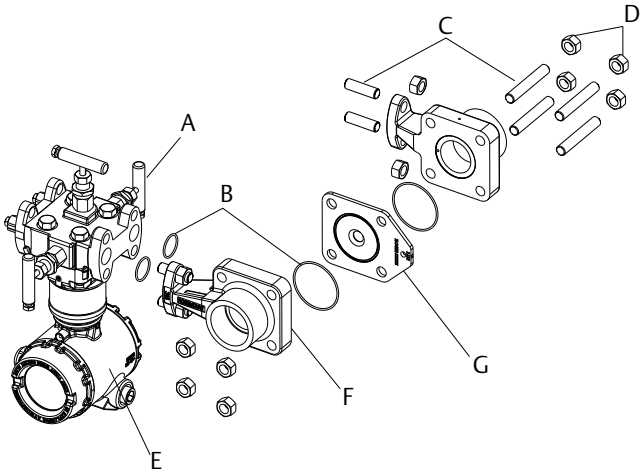

A. Manifold
B. Gaskets
C. Studs
D. Nuts
E. Transmitter
F. Rosemount 1195 enhanced support body
G. Enhanced support orifice plate

2.0 Location and orientation

Install the Rosemount 1195 Integral Orifice in the correct location within the piping branch to prevent inaccurate measurement caused by flow disturbances.

2.1 Straight pipe length

Use the upstream (U) and downstream (D) lengths provided below in conjunction with figures below to determine the appropriate upstream (U) and downstream (D) pipe lengths. For example, for a 1-in. line size with a beta ratio (β) of 0.4 using installation of Figure 3, the straight length of upstream piping required is 25 × 1 = 25-in., and downstream 10 × 1 = 10-in.

Note
The Rosemount 1195 Integral Orifice comes with the associated pipe lengths (18D upstream and 8D downstream) when ordered with process pipe-end connections.

1. *Transmitter and housing are shown for clarity purposes - only supplied if ordered.*

Straight run requirements(1)

Figure 2. Reducer

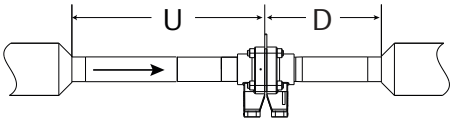

(2 d to d over a length of 1.5 d to 3 d)

Figure 3. Single 90° Bend Flow from One Branch

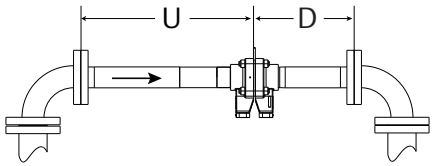

Figure 4. Two or More 90° Bends in Same Planes

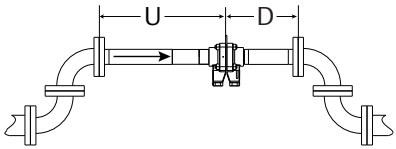

Figure 5. Two or More 90° Bends in Different Planes

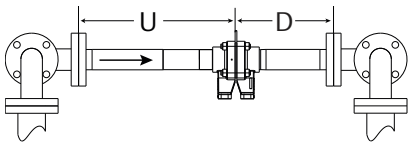

Figure 6. Expander

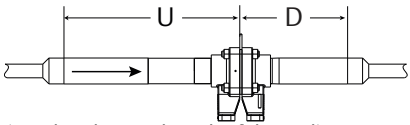

(0.5 d to d over a length of d to 2 d)

1. *For dimensions, see Table 1 on page 5.*

Figure 7. Ball/Gate Valve Fully Open

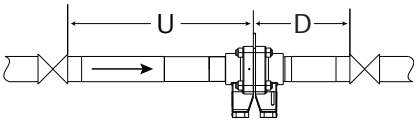

Table 1. Straight Run Requirements (in Pipe Diameters)

β[1]	Figure 3 upstream (U)	Figure 4 upstream (U)	Figure 5 upstream (U)	Figure 6 upstream (U)	Figure 7 upstream (U)	Figure 8 upstream (U)	Figures 3–8[2] On downstream (D)
0.20	20	24	25	30	22	22	10
0.40	20	25	27	31	22	22	10
0.50	20	25	28	33	23	23	10
0.60	20	27	31	37	25	25	10
0.70	23	32	35	42	28	28	10
0.75	25	35	38	45	30	30	10

1. Interpolation of intermediate β values can be used.
2. All straight lengths are expressed as multiples of the pipe inside diameter (d) and shall be measured from the upstream face of orifice plate.

3.0 Primary element orientation

Figure 8. Rosemount 1195 Flowmeter Orientation with Traditional Style Manifold

Gas (horizontal)

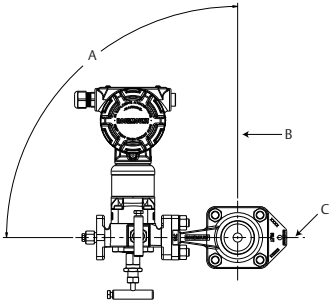

Gas (vertical)

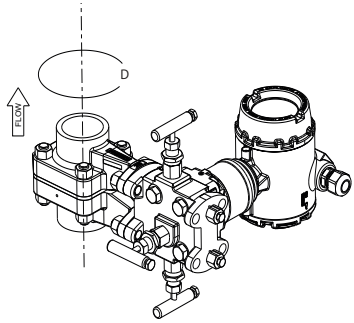

Liquid (horizontal)

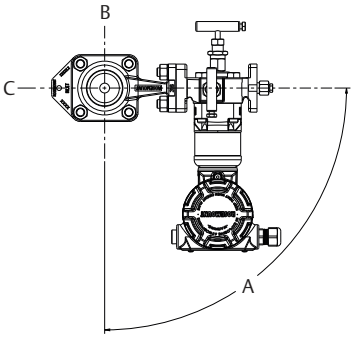

Liquid (vertical)

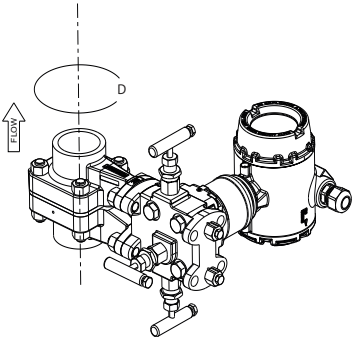

Steam (horizontal)

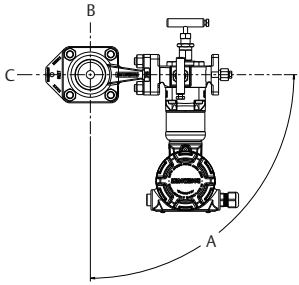

Steam (vertical)

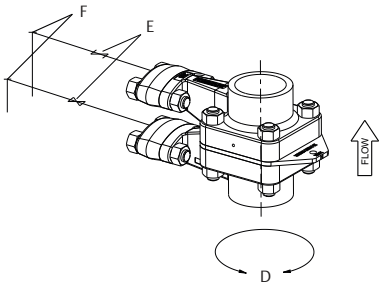

A. 90° recommended zone
B. Vertical plane
C. Horizontal plane
D. 360° recommended zone
E. Block valves
F. Vent valves

Figure 9. Rosemount 1195 Flowmeter Orientation with Flange by Flange Manifold

Gas (horizontal)

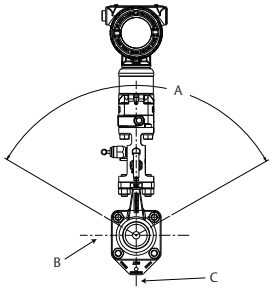

Gas (vertical)

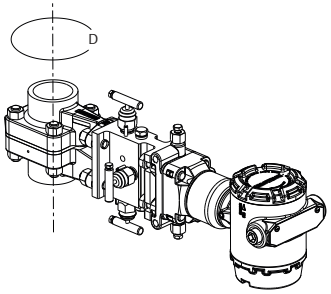

Liquid (horizontal)

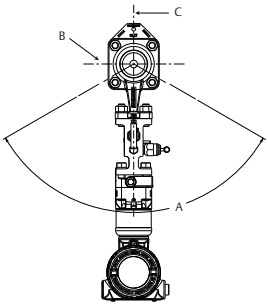

Liquid (vertical)

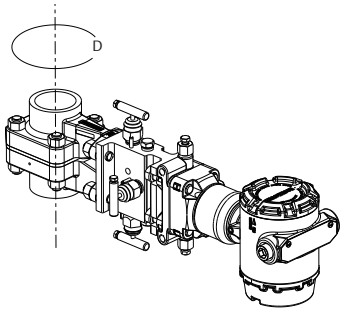

Steam (horizontal)

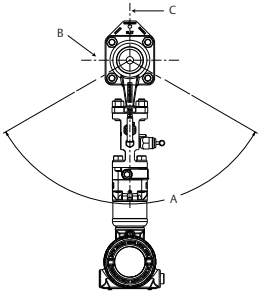

Steam (vertical)

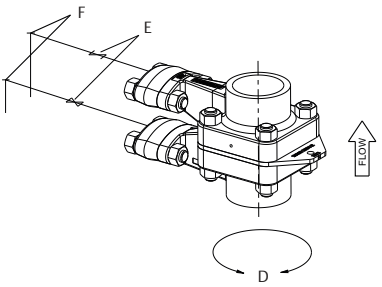

A. 120° recommended zone
B. Horizontal plane
C. Vertical plane
D. 360° recommended zone
E. Block valves
F. Vent valves

Note

For saturated steam that is not high quality, it is recommended to mount in a vertical line to avoid damming effect of the liquid.

4.0 Primary element installation

1. Ensure the side of the orifice plate marked “inlet” is facing upstream. This stamping is found on the part of the orifice plate that extends beyond the orifice bodies. Before pressurizing line, insure torque values shown below are met. See Table 2 and Figure 10 for torque requirements of manifold studs and orifice body studs. See the appropriate transmitter manual for torque requirements of transmitter bolts.

Table 2. Stud and Nut Torque Specifications(1)(2)

Manifold studs	Torque
All Line sizes and gasket types	32 lb-ft.(44 N-m)
Orifice body studs	**Torque**
All line sizes and gasket types	60 lb-ft. (82 N-m)

1. Studs and nuts should be tightened to specification in two to three steps following a cross pattern.
2. Never reuse gaskets. Always replace gaskets after disassembly to ensure proper seal.

Figure 10. Rosemount 1195 Assembly Fastener Naming Convention

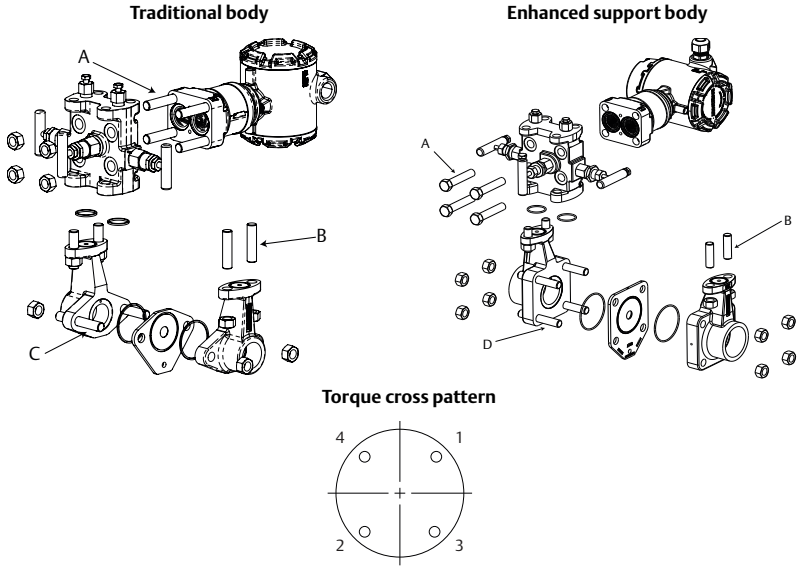

A. Transmitter bolts - 4×
B. Manifold studs - 4×
C. Orifice body studs - 2×
D. Orifice body studs - 4×

2. Units with flanged process connections:
   a. Install the flanges in the process pipe. The distance between flanges should be equal to the overall length of the flowmeter, plus clearance for gaskets.
   b. Install the unit between the flanges, using studs, nuts, and gaskets appropriate for the flange size/rating and process conditions. Proper support is needed at the flange connections as shown below. See Figure 11.
3. Units with threaded process connections:
   a. Install the unit using the appropriate threaded connection hardware.
4. Units with Socketweld Bodies:
   a. To ensure perpendicularity of the pipe to the orifice fitting, the socket diameter is smaller than the standard pipe OD. The pipe OD must be machined-to-fit prior to welding.
   b. To prevent damage, remove the transmitter prior to welding.

Figure 11. Recommended Support Locations for Installation

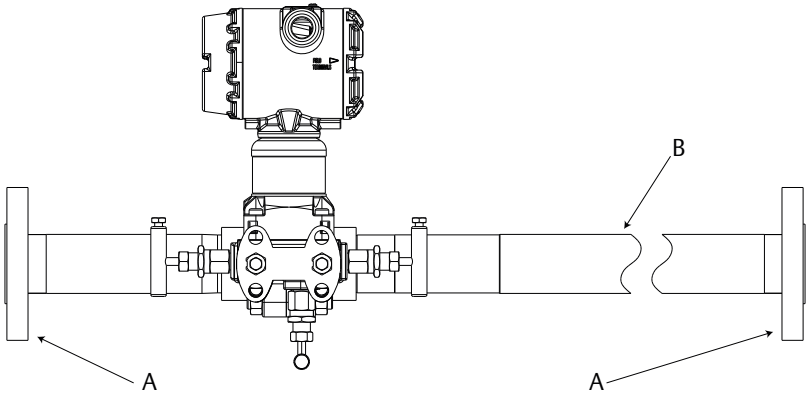

A. Support
B. No step

5. Once the Rosemount 1195 is installed ensure that it is supported properly and take precautions to ensure that it is not used as a step. Refer to Figure 11 for support locations.

5.0 Preparing for operation

Note
Serious injury can occur by opening the valves when the pipes are pressurized. Do not bleed or vent process fluid if it is toxic or harmful to health or environment.

5.1 Direct mount 450 °F (232 °C) or less

Liquid applications

1. Pressurize line.
2. Open the equalizer valve.
3. Open the high and low side valves.
4. Bleed drain/vent valves until no gas is apparent in the liquid.
5. Close the vent/drain valves.
6. Close the low side valve.
7. Check the transmitter zero according to the transmitter product manual.
8. Close the equalizer valve.
9. Open the low side valve. The system is now operational.

Gas applications

1. Pressurize line.
2. Open the equalizer valve.
3. Open the high and low side valves.
4. Open drain/vent valves to ensure no liquid is present.
5. Close the vent/drain valves.
6. Close the low side valve.
7. Check the transmitter zero according to the transmitter product manual.
8. Close the equalizer valve.
9. Open the low side valve. The system is now operational.

Steam applications

1. Remove pressure from line.
2. Open equalizer, high, and low side valves.
3. Fill manifold and transmitter with water via drain vents.
4. Close low side valve.
5. Pressurize line.
6. Gently tap electronics body, manifold head, and integral orifice body with a small wrench to dislodge any entrapped air.
7. Check the transmitter zero according to the transmitter product manual.
8. Close equalizer valve.
9. Open the low side valve. The system is now operational.

5.2 Remote mount

Gas applications-transmitter located above Rosemount 1195 Taps

1. Pressurize line.
2. Open equalizer valve on transmitter manifold.
3. Open high and low side transmitter manifold valves.
4. Open drain/vent valves on transmitter manifold to ensure no liquids are present.
5. Close drain/vent valves.
6. Close low side transmitter manifold valve.
7. Check transmitter zero according to transmitter manual.
8. Close equalizer on transmitter manifold.
9. Open low side valve on transmitter manifold. The system is now operational.

Figure 12. Remote Gas Service(1)

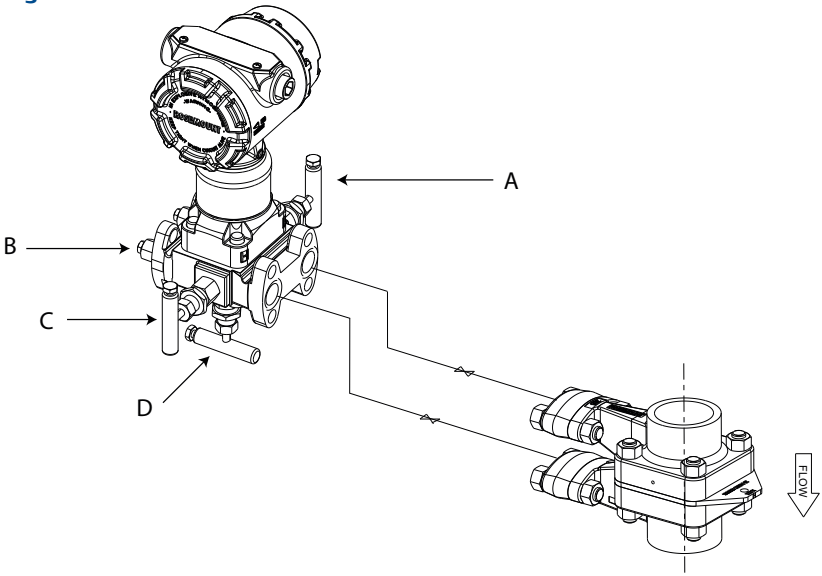

A. Low valve
B. Vent
C. High valve
D. Equalizer valve

1. *Applicable to both body assemblies.*

Liquid applications-transmitter located below Rosemount 1195 Taps

1. Pressurize line.
2. Open equalizer valve on transmitter manifold. Close equalizer valve at integral orifice, if one is used.
3. Open high and low side transmitter manifold valves and high and low block valves at integral orifice.
4. Bleed drain/vent valves on transmitter manifold until no air is present.
5. Close transmitter manifold drain vent valves, then bleed vent valves at the integral orifice block valves until no air is present.
6. Close vent valves at integral orifice block valves.
7. Close equalizer valve at transmitter manifold.
8. Close low and high side block valves at integral orifice.
9. Open vent valves at integral orifice block valves.
10. Check transmitter zero according to transmitter manual.
11. Close vent valves at integral orifice block valves.
12. Open high and low side block valves at integral orifice. The system is now operational.

Steam service-transmitter located below Rosemount 1195 Taps

1. Remove pressure from line or close block valves at integral orifice.
2. Open equalizer valves, high and low side valves on the transmitter manifold. Close equalize valve at integral orifice, if one is used.
3. Open vent valves at integral orifice block valves. To vent sensing lines.
4. Fill transmitter manifold and instrument lines with water via low side vent at integral orifice block valves.
5. Open and close vent valves at transmitter to bleed out trapped air.
6. Close the equalizer valve at transmitter manifold.
7. Complete filling the low side and high side sensing lines.
8. Gently tap electronics body, transmitter manifold, instrument lines, and integral orifice with a small wrench to dislodge any trapped air.
9. Check transmitter zero according to transmitter manual.
10. Close vent valves at integral orifice block valves.
11. If block valves at integral orifice had been closed they should now be opened. System is now operational for steam flow measurement.

Figure 13. Remote Steam and Liquid Service(1)

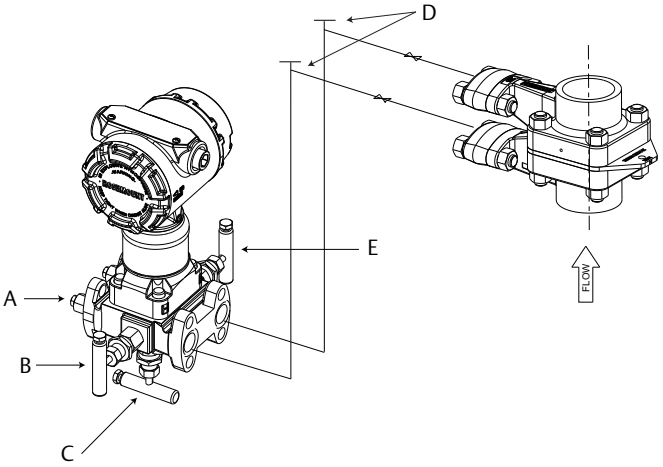

A. Vent
B. High valve
C. Equalizer valve
D. Vent valves
E. Low valve

1. *Applicable to both body assemblies.*

6.0 Product certifications

6.1 Approved Manufacturing Locations

Emerson — Shakopee, Minnesota USA

Rosemount DP Flow Design and Operations — Boulder, Colorado USA

Emerson GmbH & Co. OHG — Wessling, Germany

Emerson Asia Pacific Private Limited — Singapore

Emerson Beijing Instrument Co., Ltd — Beijing, China

6.2 European Directive Information

The EU declaration of conformity for all applicable European directives for this product can be found on the at Emerson.com/Rosemount. A hard copy may be obtained by contacting our local sales office.

European Pressure Equipment Directive (PED) (97/23/EC)

Refer to EU declaration of conformity for conformity assessment.

Pressure Transmitter — See appropriate Pressure Transmitter QSG.

6.3 Hazardous Locations Certifications

For information regarding the transmitter product certification, see the appropriate transmitter QSG:

- Rosemount 3051S with HART Protocol Quick Start Guide
- Rosemount 3051SMV Flowmeter Quick Start Guide
- Rosemount 3051 Quick Start Guide

Figure 14. Rosemount 1195 Declaration of Conformity

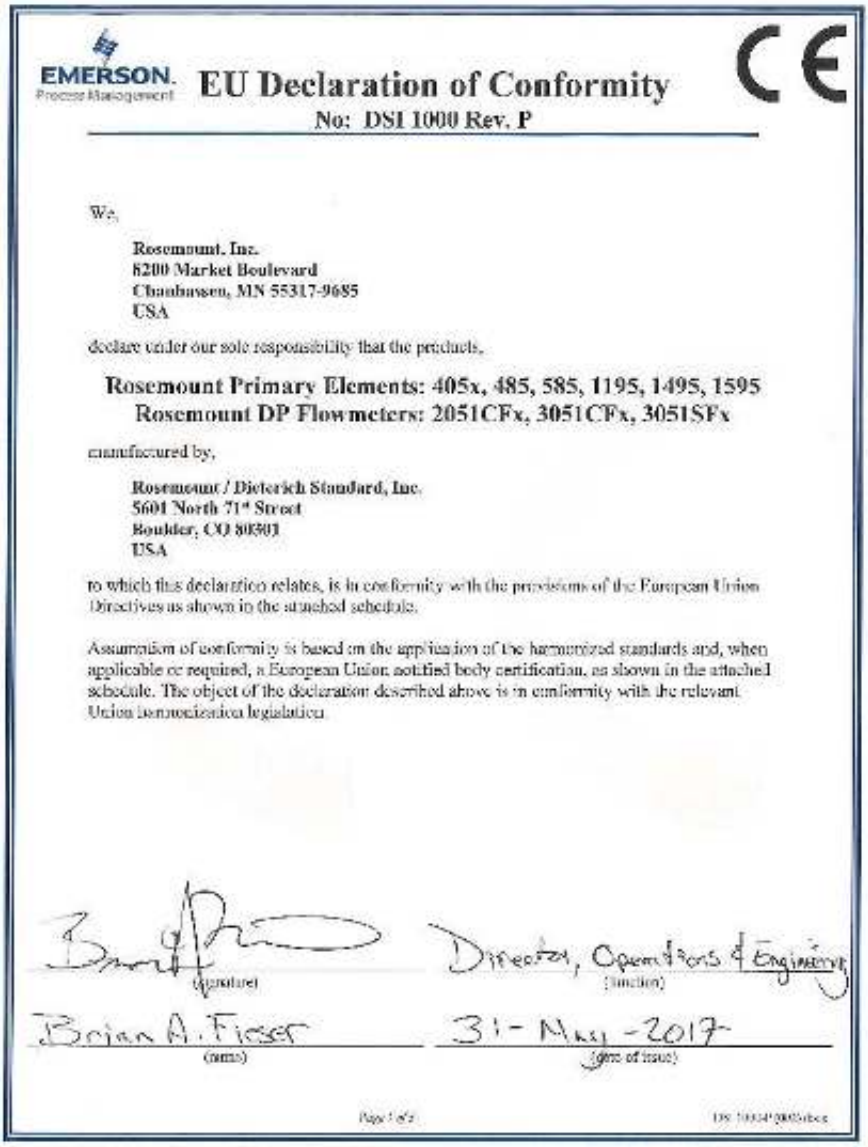

EMERSON. Process Management

EU Declaration of Conformity

No: DSI 1000 Rev. P

We,

Rosemount, Inc.
8200 Market Boulevard
Chanhassen, MN 55317-9685
USA

declare under our sole responsibility that the products,

Rosemount Primary Elements: 405x, 485, 585, 1195, 1495, 1595
Rosemount DP Flowmeters: 2051CFx, 3051CFx, 3051SFx

manufactured by,

Rosemount / Dieterich Standard, Inc.
5601 North 71st Street
Boulder, CO 80301
USA

to which this declaration relates, is in conformity with the provisions of the European Union Directives as shown in the attached schedule.

Assumption of conformity is based on the application of the harmonized standards and, when applicable or required, a European Union notified body certification, as shown in the attached schedule. The object of the declaration described above is in conformity with the relevant Union harmonization legislation.

(signature) Director, Operations & Engineering (function)

Brian A. Fieser (name) 31-May-2017 (date of issue)

Page 1 of 2



EMERSON. Process Management

EU Declaration of Conformity

No: DSI 1000 Rev. P

CE

PED Directive (2014/68/EU) ***This directive is valid from 19 July 2016***

Summary of Classification – Group 1 Dangerous Fluids

Model/Range	Hazard Classification	
	Gas	Liquid
3051S (Flangible CL150/PN16 to CL300/PN50 (Sensor 11, 22 & 44)	SEP	SEP
3051S (Flangible CL1500/PN250 to CL2500/PN400 (Sensor 11 & 22)	CAT II*	SEP
3051S (Flangible CL1500/PN250 & CL2500/PN400 (Sensor 44	CAT III	SEP
3051S, 3051, 0SP Compact Primary Element (e0051x0C)	SEP	SEP
1195, a051xF2 – 2" & 3" (All types & Ratios)	SEP	SEP
1195, a051xF2 – CL150/PN16 1-1/2"	CAT II*	SEP
1195, a051xFA – CL300/PN40 1-1/2"	CAT II*	SEP
1195, a051xFA – CL600/PN100 to CL2500/PN400 1-1/2"	CAT II*	CAT II
1195, a051xF2 – 1-1/2" Threaded & Welded	CAT II*	CAT II
1495 Orifice Plate	SEP	SEP
1496 Orifice Flange Union	SEP	SEP
1595 Conditioning Orifice Plate	SEP	SEP
Pak-Lok – 485x051xFA: All (CL600/PN100 Rating) All Lines	SEP	SEP
Flanged – 485x051xFA: CL150/PN16 to CL300/PN40 All Lines	SEP	SEP
Flanged – 485x051xFA: CL150/PN250 & CL2500/PN400 All Lines	CAT II*	SEP
Flange-Lok – 485x051xFA: CL150/PN16 to CL2500/PN400 All Lines	SEP	SEP
Flo-Tap – 485x051xFA: Sensor Size 1 CL150/PN16 to CL600/PN100 3" to 10" Line	SEP	SEP
Flo-Tap – 485x051xFA : Sensor Size 2 CL150/PN16 6" to 24" Line	CAT II*	SEP
Flo-Tap – 485x051xFA : Sensor Size 2 CL150/PN16 30" to 36" Line	CAT II*	SEP
Flo-Tap – 485x051xFA : Sensor Size 2 CL300/PN40 6" to 36" Line	CAT II*	SEP
Flo-Tap – 485x051xFA : Sensor Size 2 CL600/PN100 8" to 14" Line	CAT II*	SEP
Flo-Tap – 485x051xFA : Sensor Size 2 CL600/PN100 16" to 36" Line	CAT III	CAT II
Flo-Tap – 485x051xFA : Sensor Size 3 CL150/PN16 12" to 36" Line	CAT II*	SEP
Flo-Tap – 485x051xFA : Sensor Size 3 CL150/PN16 42" to 72" Line	CAT III	CAT II
Flo-Tap – 485x051xFA : Sensor Size 3 CL300/PN40 12 to 72" Line	CAT III	CAT II
Flo-Tap – 485x051xFA : Sensor Size 3 CL600/PN100 12" to 36" Line	CAT III	CAT II
Flo-Tap – 485x051xFA : Sensor Size 3 CL600/PN100 42" to 72" Line	CAT IV*	CAT II
Flo-Tap – 585: Sensor Size 44 CL150/PN16 (Line Size Code <= 420)	SEP	SEP
Flo-Tap – 585: Sensor Size 44 CL150/PN16 (Line Size Code > 420, <=720)	CAT II*	SEP
Flo-Tap – 585: Sensor Size 44 CL300/PN40 (Line Size Code >= 420)	SEP	SEP
Flo-Tap – 585: Sensor Size 44 CL300/PN40 (Line Size Code > 420, <=720)	CAT II*	SEP
Flo-Tap – 585: Sensor Size 44 CL600/PN100 (Line Size Code <= 420)	SEP	SEP
Flo-Tap – 585: Sensor Size 44 CL600/PN100 (Line Size Code > 420, <=720)	CAT II*	SEP
585XI: Sensor Size 44	CAT III*	SEP

Certificate of Assessment– CE-0041-PED-H-RWT 001-16-USA

** Where fluid is un-ventilated gas, these are increased to CAT III.*
IV Category IV Flo Tap requires a BI Certificate for design examination and an H1 Certificate for special surveillance*

Page 2 of 3

DSI 1000 P (SIT) Rev

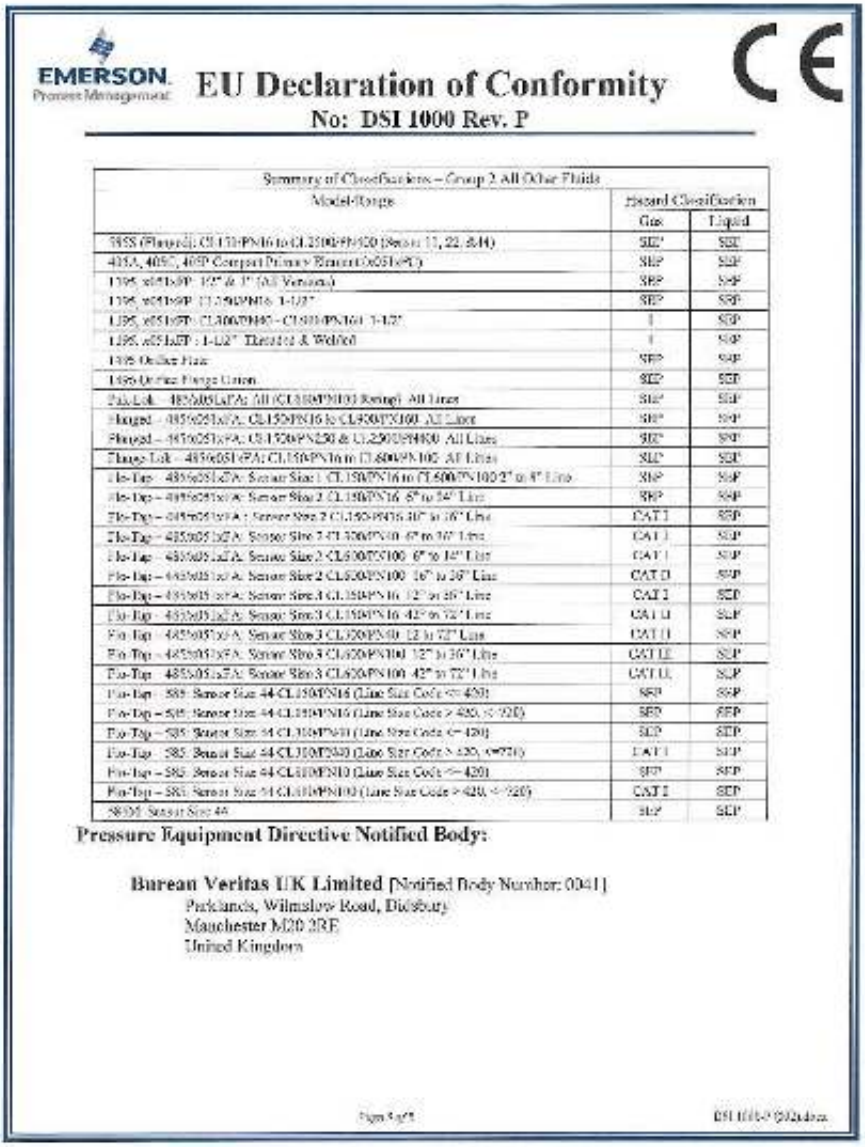

EMERSON. Process Management

EU Declaration of Conformity

No: DSI 1000 Rev. P

Summary of Classifications – Group 2 All Other Fluids		
Model/Range	Hazard Classification	
	Gas	Liquid
585S (Flanged): CL150/PN16 to CL2500/PN400 (Sensor 11, 22, &44)	SEP	SEP
405A, 405C, 405P Compact Primary Element (x051xPC)	SEP	SEP
1195, x051xPP: 1/2" & 1" (All Versions)	SEP	SEP
1195, x051xPP: CL300/PN16 1-1/2"	SEP	SEP
1195, x051xPP: CL300/PN40 - CL600/PN160 1-1/2"	I	SEP
1195, x051xPP: 1-1/2" Threaded & Welded	I	SEP
1495 Orifice Plate	SEP	SEP
1495 Orifice Flange Union	SEP	SEP
Pak-Lok – 485x051xPA: All (CL150/PN100 Rating) All Lines	SEP	SEP
Flanged – 485x051xPA: CL150/PN16 to CL900/PN100 All Lines	SEP	SEP
Flanged – 485x051xPA: CL1500/PN250 & CL2500/PN400 All Lines	SEP	SEP
Flange-Lok – 485x051xPA: CL150/PN16 to CL600/PN100 All Lines	SEP	SEP
Flo-Tap – 485x051xPA: Sensor Size 1 CL150/PN16 to CL600/PN100 2" to 8" Line	SEP	SEP
Flo-Tap – 485x051xPA: Sensor Size 2 CL150/PN16 6" to 24" Line	SEP	SEP
Flo-Tap – 485x051xPA: Sensor Size 2 CL150/PN16 30" to 36" Line	CAT I	SEP
Flo-Tap – 485x051xPA: Sensor Size 2 CL300/PN40 6" to 36" Line	CAT I	SEP
Flo-Tap – 485x051xPA: Sensor Size 2 CL600/PN100 6" to 14" Line	CAT I	SEP
Flo-Tap – 485x051xPA: Sensor Size 2 CL600/PN100 16" to 36" Line	CAT II	SEP
Flo-Tap – 485x051xPA: Sensor Size 3 CL150/PN16 12" to 36" Line	CAT I	SEP
Flo-Tap – 485x051xPA: Sensor Size 3 CL150/PN16 42" to 72" Line	CAT II	SEP
Flo-Tap – 485x051xPA: Sensor Size 3 CL300/PN40 12" to 72" Line	CAT II	SEP
Flo-Tap – 485x051xPA: Sensor Size 3 CL600/PN100 12" to 36" Line	CAT II	SEP
Flo-Tap – 485x051xPA: Sensor Size 3 CL600/PN100 42" to 72" Line	CAT II	SEP
Flo-Tap – 585: Sensor Size 44 CL150/PN16 (Line Size Code <= 420)	SEP	SEP
Flo-Tap – 585: Sensor Size 44 CL150/PN16 (Line Size Code > 420, <= 720)	SEP	SEP
Flo-Tap – 585: Sensor Size 44 CL300/PN40 (Line Size Code <= 420)	SEP	SEP
Flo-Tap – 585: Sensor Size 44 CL300/PN40 (Line Size Code > 420, <= 720)	CAT I	SEP
Flo-Tap – 585: Sensor Size 44 CL600/PN100 (Line Size Code <= 420)	SEP	SEP
Flo-Tap – 585: Sensor Size 44 CL600/PN100 (Line Size Code > 420, <= 720)	CAT I	SEP
585M: Sensor Size 44	SEP	SEP

Pressure Equipment Directive Notified Body:

Bureau Veritas UK Limited [Notified Body Number: 0041]
Parklands, Wilmslow Road, Didsbury
Manchester M20 2RE
United Kingdom

Page 5 of 5 DSI 1000-P (2012).docx

表格 1B: 含有 China RoHS 管控物质超过最大浓度限值的部件型号列表 Rosemount 1195
Table 1B: List of Rosemount 1195 Parts with China RoHS Concentration above MCVs

部件名称 Part Name	有害物质 / Hazardous Substances					
	铅 Lead (Pb)	汞 Mercury (Hg)	镉 Cadmium (Cd)	六价铬 Hexavalent Chromium (Cr +6)	多溴联苯 Polybrominated biphenyls (PBB)	多溴联苯醚 Polybrominated diphenyl ethers 多溴联苯醚 (PBDE)
铝制温度传感器外壳组件 Aluminum RTD Housing Assembly	O	O	O	X	O	O

本表格依据 SJ/T11364 的规定而制作.
This table is proposed in accordance with the provision of SJ/T11364
O: 意为该部件的所有均质材料中该有害物质的含量均低于 GB/T 26572 所规定的限量要求.
O: Indicate that said hazardous substance in all of the homogeneous materials for this part is below the limit requirement of GB/T 26572.
X: 意为在该部件所使用的所有均质材料里，至少有一类均质材料中该有害物质的含量高于 GB/T 26572 所规定的限量要求.
X: Indicate that said hazardous substance contained in at least one of the homogeneous materials used for this part is above the limit requirement of GB/T 26572.

上述申明仅适用于选择铝制外壳组件的产品。其他所有差压流量一次元件的组件所含有的 China RoHS 管控物质浓度均低于 GB/T 26572 所规定的限量要求。关于差压流量计变送器组件的管控物质浓度的申明，请参看变送器的快速安装指南。

The disclosure above applies to units supplied with aluminum connection heads. No other components supplied with DP Flow primary elements contain any restricted substances. Please consult the transmitter Quick Start Guide (QIG) for disclosure information on transmitter components.

00825-0100-4686

Quick Start Guide
00825-0100-4686, Rev FA
September 2017

Global Headquarters
Emerson Automation Solutions
6021 Innovation Blvd.
Shakopee, MN 55379, USA
+1 800 999 9307 or +1 952 906 8888
+1 952 949 7001
RFQ.RMD-RCC@Emerson.com

North America Regional Office
Emerson Automation Solutions
8200 Market Blvd.
Chanhassen, MN 55317, USA
+1 800 999 9307 or +1 952 906 8888
+1 952 949 7001
RMT-NA.RCCRFQ@Emerson.com

Latin America Regional Office
Emerson Automation Solutions
1300 Concord Terrace, Suite 400
Sunrise, FL 33323, USA
+1 954 846 5030
+1 954 846 5121
RFQ.RMD-RCC@Emerson.com

Europe Regional Office
Emerson Automation Solutions
Neuhofstrasse 19a P.O. Box 1046
CH 6340 Baar
Switzerland
+41 (0) 41 768 6111
+41 (0) 41 768 6300
RFQ.RMD-RCC@Emerson.com

Asia Pacific Regional Office
Emerson Automation Solutions
1 Pandan Crescent
Singapore 128461
+65 6777 8211
+65 6777 0947
Enquiries@AP.Emerson.com

Middle East and Africa Regional Office
Emerson Automation Solutions
Emerson FZE P.O. Box 17033
Jebel Ali Free Zone - South 2
Dubai, United Arab Emirates
+971 4 8118100
+971 4 8865465
RFQ.RMTMEA@Emerson.com

Linkedin.com/company/Emerson-Automation-Solutions

Twitter.com/Rosemount_News

Facebook.com/Rosemount

Youtube.com/user/RosemountMeasurement

Google.com/+RosemountMeasurement

Standard Terms and Conditions of Sale can be found on the Terms and Conditions of Sale page.
The Emerson logo is a trademark and service mark of Emerson Electric Co.
Rosemount and Rosemount logotype are trademarks of Emerson.
All other marks are the property of their respective owners.
© 2017 Emerson. All rights reserved.

ROSEMOUNT™

EMERSON