Product Data Sheet
00813-0100-4801, Rev UW
April 2026

Rosemount™ 3051S Series of Instrumentation



Innovation reaching across your operation

With the Rosemount 3051S Series of Instrumentation, operations can be optimized in these critical areas: production, quality, energy efficiency, safety, and environment. By leveraging the power of the Scalable™ 3051S across the entire operation, you'll be able to:

- Minimize process variability
- Gain greater process insight
- Reduce maintenance and downtime
- Meet regulatory demands

Additionally, its ease of use ensures realization of the full potential of the measurement investment.

Overview

Rosemount 3051S SuperModule™ Platform

The most advanced pressure, flow, and level measurements



- The all-welded hermetic stainless steel (SST) design delivers the industry's highest field reliability.
- Ultra performance provides up to ±0.025 percent accuracy and 200:1 rangedown.
- Ultra for Flow performance provides up to ±0.04 percent of reading and 14:1 flow turndown.
- 15-year stability and 15-year limited warranty
- SIL 3 Capable: IEC 61508 certified by an accredited third-party agency for use in safety instrumented systems up to SIL 3 (minimum requirement of single use [1oo1] for SIL 2 and redundant use [1oo2] for SIL 3).
- IEC 61508 functional safety specifications for 3051S are detailed at Emerson.com/Safety.

Contents

Overview....2
Rosemount 3051S Coplanar™ Pressure Transmitter....6
Rosemount 3051S In-line Pressure Transmitter....19
Rosemount 3051S MultiVariable™ Transmitter....29
Rosemount 3051SF Differential Pressure (DP) Flow Meters....42
Rosemount 3051S Electronic Remote Sensor (ERS™) System....81
Rosemount 3051S Scalable™ Level Transmitter....101
Diaphragm seals for Rosemount 3051SAL....115
Specifications....136
Product certifications....167
Dimensional drawings....168
Accessories....186

Rosemount 3051S Series selection guide

Rosemount 3051S Coplanar™ Differential, Gauge, or Absolute Transmitter



- Coplanar platform enables integrated manifold, primary element, and seal system solutions.
- Dual-capacitance Saturn™ sensor technology corrects for overpressure and line pressure effects.
- Calibrated spans from 0.1 inH_2O to 4,000 psi (0.25 mbar to 276 bar).
- Available with 316L stainless steel (SST), alloy C-276, alloy 400, tantalum, gold-plated alloy 400, or gold-plated 316L SST process isolators.

Rosemount 3051S In-line Gauge or Absolute Transmitter



- Direct threaded connection, manifold, or seal system solutions.
- Piezoresistive sensor technology allows calibrated spans from 0.3 to 10,000 psi (20.7 mbar to 689 bar).
- Available with 316L SST or alloy C-276 process isolators.

Rosemount 3051S MultiVariable™ Transmitter



- Combines the following in a single device:
  - Differential pressure measurements
  - Static pressure measurements
  - Process temperature measurements
  - Mass and energy flow
- Compensates for 25+ different variables providing accurate and repeatable flow readings.
- Customize pressure and temperature compensation for any flow application.
- Easily configure flow and device parameters with ***Engineering Assistant Software***.

Rosemount 3051SF Differential Pressure (DP) Flow Meters



- Integrates the 3051S with Rosemount's industry leading primary elements to create one complete flow meter assembly.
- Fully assembled, configured and, leak tested for out-of-the-box installation.
- Reduce installed costs by replacing ten parts traditionally used for a DP flow installation with one flow meter.
- Reduce straight pipe requirements, lower permanent pressure loss, and achieve accurate measurement in small line sizes.

Rosemount 3051S Electronic Remote Sensor (ERS™) System



- The industry's first digital DP level architecture consists of a single 4–20 mA HART® loop with two 3051S pressure sensors connected electronically.
- Unique digital architecture enables stable and repeatable DP level measurements on tall vessels, towers, and applications with wide-varying temperatures.
- Achieve increased process insight and diagnostics with multivariable measurements including DP, pressure, and scaled variable for tank level or volume.
- Simplify installations and maintenance by eliminating wet or dry legs, heat tracing, and purge systems.

Rosemount 3051S Level Transmitter



- Level transmitters combine world-class 3051S Pressure Transmitters with direct mount seals, all in a single integrated model number.
- Connect to virtually any process with a comprehensive offering of seal types, sizes, fill fluids, and diaphragm materials.
- Combine with a Rosemount 1199 Remote Mount Seal to form a Tuned-System™ Assembly for a cost effective, easy-to-install DP level measurement solution.

Advanced functionality

*Wireless*HART® (IEC 62591) capabilities



The following functionality is available on Coplanar™, in-line, MultiVariable™, differential pressure (DP) flow meters and level transmitters:

- Quickly deploy new pressure, level, and flow measurements in 70 percent less time.
- Eliminate wiring design and construction complexities to lower costs by 40–60 percent.
- Reduce pipe penetrations and impulse piping with industry-leading MultiVariable technology.
- Extended range antenna capabilities provide access to remote locations.
- Delivering more than a decade of maintenance free performance with 15-year stability and 10-year power module life.

Advanced diagnostic capabilities



The following functionality is available on Coplanar, in-line, DP flow meters, and level transmitters:

- Provides diagnostic coverage from the process to the transmitter to the host.
- Prevent on-scale failures by diagnosing electrical loop issues with loop integrity diagnostics.
- Process intelligence detects abnormal process conditions enabling more productive and safer operations.
- Monitor for solids build-up or freezing in the process connection with the plugged impulse line diagnostic.
- Extend diagnostic coverage to Safety Instrumented Systems with IEC 61508 SIL ⅔ capable rating.

Remote display and interface



The following functionality is available on Coplanar, in-line, DP flow meters, Electronic Remote Sensors™, and level transmitters:

- Direct mount to the process and access transmitter capabilities and diagnostics at grade.
- Get access up to 100 ft. (30 m) away from the process to ensure personnel safety.
- Eliminate the need for impulse lines for best practice installations.

Rosemount instrument manifolds



Available on traditional, Coplanar, and in-line transmitters:

- Designed and engineered to provide optimal performance with Rosemount 3051S Transmitters.
- Reduce cost and leak points with flangeless Coplanar design.
- Fully integrated manifold and transmitter assemblies come fully leak-checked, calibrated, and assembled allowing for one purchase order to save time and cost.
- Rosemount manifolds provide a wide variety of styles, materials, and configurations to fit any process.

Access information when you need it with asset tags

Newly shipped devices include a unique QR code asset tag that enables you to access serialized information directly from the device. With this capability, you can:

- Access device drawings, diagrams, technical documentation, and troubleshooting information in your MyEmerson account.
- Improve mean time to repair and maintain efficiency.
- Ensure confidence that you have located the correct device.
- Eliminate the time-consuming process of locating and transcribing nameplates to view asset information.

Rosemount 3051S Coplanar™ Pressure Transmitter



3051S Coplanar Pressure Transmitters are the industry leader for Differential, Gauge, and Absolute pressure measurement. The Coplanar platform allows seamless integration with manifolds, primary elements, and seal solutions. Capabilities include:

- Ultra, Ultra-for-Flow, and Classic performance
- 4–20 mA HART®, *Wireless*HART® , FOUNDATION™ Fieldbus protocols
- Safety certification (option code QT)
- Advanced diagnostics (option code DA2)
- Remote display and interface (option code M7, M8, or M9)

VIEW PRODUCT >

Online product configurator

Many products are configurable online using our product configurator.

Select the **Configure** button or visit Emerson.com/global to start. With this tool's built-in logic and continuous validation, you can configure your products more quickly and accurately.

Specifications and options

The purchaser of the equipment must specify and select:

- Product materials
- Options
- Components

Sizing and selection

Use the Differential Pressure (DP) Level Sizing & Selection Tool to size Rosemount DP Level meters to meet your application-specific requirements.

The Sizing & Selection tool:

1. Verifies if a selected product meets your application requirements.
2. Provide a comparison between different system types.
3. Generates a detailed accuracy comparison graph.

Once a sizing is completed, the configuration tool will help create a complete and valid model code to match your requirements and include any additional options or approvals.

Optimizing lead time

The starred offerings (★) represent the most common options and should be selected for the fastest delivery. The non-starred offerings are subject to additional delivery lead time.

Required model components

Model

Code	Description	
3051S	Scalable™ pressure transmitter	★

Performance class

Code	Description	
1	Ultra: 0.025 % span accuracy, 200:1 rangedown, 15-year stability, 15-year limited warranty	★
2	Classic: 0.035 % span accuracy, 150:1 rangedown, 15-year stability	★
3(1)	Ultra for Flow: 0.04 % reading accuracy, 200:1 turndown, 15-year stability, 15-year limited warranty	★

(1) *This option is only available with **Range** codes 2A and 3A, 316L stainless steel (SST) or alloy C-276 isolating diaphragm, and silicone fill fluid.*

Connection type

Code	Description	
C	Coplanar™	★

Measurement type

Performance class code 3 is available with **Measurement type** code D only.

Code	Description	
D	Differential	★
G	Gauge	★
A	Absolute	

Pressure range

Code	Description			
	Differential	**Gauge**	**Absolute**	
1A	–25 to 25 inH_2O (–62.16 to 62.16 mbar)	–25 to 25 inH_2O (–62.16 to 62.16 mbar)	0 to 30 psia (0 to 2.07 bar)	★
2A	–250 to 250 inH_2O (–621.60 to 621.6 mbar)	–250 to 250 inH_2O (–621.60 to 621.6 mbar)	0 to 150 psia (0 to 10.34 bar)	★
3A	–1,000 to 1,000 inH_2O (–2.49 to 2.49 bar)	–393 to 1,000 inH_2O (–0.97 to 2.49 bar)	0 to 800 psia (0 to 55.16 bar)	★
4A	–300 to 300 psi (–20.68 to 20.68 bar)	–14.2 to 300 psig (–0.97 to 20.68 bar)	0 to 4,000 psia (0 to 275.79 bar)	★
5A	–2,000 to 2,000 psi (–137.89 to 137.89 bar)	–14.2 to 2,000 psig (–0.97 to 137.89 bar)	N/A	★
0A(1)	–3 to 3 inH_2O (–7.46 to 7.46 mbar)	N/A	0 to 5 psia (0 to 0.34 bar)	

(1) *Rosemount 3051S_CD0 is only available with stainless steel (SST) traditional flange, 316L SST diaphragm material, glass-filled PTFE O-ring (standard), and **Bolting** option L4.*

Isolating diaphragm material

Code	Description	
2(1)	316L stainless steel (SST)	★
3(1)	Alloy C-276	★
4(1)	Alloy 400	
5(2)	Tantalum	
6(1)(3)	Gold-plated Alloy 400	
7(1)	Gold-plated 316L SST	

(1) *Materials of construction comply with metallurgical requirements highlighted within NACE® MR0175/International Organization for Standardization (ISO) 15156 for sour oil field production environments. Environmental limits apply to certain materials. Consult latest standard for details. Selected materials also conform to NACE MR0103 for sour refining environments. Order with Q15 or Q25 to receive a NACE certificate.*

(2) *Tantalum diaphragm material is only available for ranges 2A–5A, differential and gauge.*

(3) *Includes a graphite-filled PTFE O-ring.*

Process connection

Code	Description	Size	Materials of construction			
			Flange material	Drain vent	Bolting	
000	None (no process flange)	N/A	N/A	N/A	N/A	★
A11[1]	Assemble to Rosemount 305 integral manifold	N/A	N/A	N/A	N/A	★
A12[1]	Assemble to Rosemount 304 or AMF manifold and stainless steel (SST) traditional flange	N/A	N/A	N/A	N/A	★
A15	Assemble to 304 or AMF manifold to SST traditional flange with alloy C-276 drain vents	N/A	N/A	N/A	N/A	★
A16[1]	Assemble to 304 or AMF manifold to DIN SST traditional flange	N/A	N/A	N/A	N/A	★
A22	Assemble to 304 or AMF manifold to SST Coplanar™ flange	N/A	N/A	N/A	N/A	★
B11[1][2][3]	Assemble to one Rosemount 1199 seal	N/A	SST	N/A	N/A	★
B12[1][2][3]	Assemble to two 1199 seals	N/A	SST	N/A	N/A	★
C11[1]	Assemble to Rosemount 405C or 405P primary element	N/A	N/A	N/A	N/A	★
D11[1]	Assemble to Rosemount 1195 integral orifice and 305 integral manifold	N/A	N/A	N/A	N/A	★
EA2[1]	Assemble to Rosemount 485 or 405A Annubar™ primary element with Coplanar flange	N/A	SST	316 SST	N/A	★
EA3[1]	Assemble to 485 or 405A Annubar primary element with Coplanar flange	N/A	Cast C-276	Alloy C-276	N/A	★
EA5[1]	Assemble to 485 or 405A Annubar primary element with Coplanar flange	N/A	SST	Alloy C-276	N/A	★
E11	Coplanar flange	¼–18 NPT	Carbon steel (CS)	316 SST	N/A	★
E12	Coplanar flange	¼–18 NPT	SST	316 SST	N/A	★
E13[4]	Coplanar flange	¼–18 NPT	Cast C-276	Alloy C-276	N/A	★
E14	Coplanar flange	¼–18 NPT	Alloy 400	Alloy 400/K-500	N/A	★
E15[4]	Coplanar flange	¼–18 NPT	SST	Alloy C-276	N/A	★
E16[4]	Coplanar flange	¼–18 NPT	CS	Alloy C-276	N/A	★
E21	Coplanar flange	RC ¼	CS	316 SST	N/A	★
E22	Coplanar flange	RC ¼	SST	316 SST	N/A	★
E23[4]	Coplanar flange	RC ¼	Cast C-276	Alloy C-276	N/A	★
E25[4]	Coplanar flange	RC ¼	SST	Alloy C-276	N/A	★
E26[4]	Coplanar flange	RC ¼	CS	Alloy C-276	N/A	★
F12	Traditional flange	¼–18 NPT	SST	316 SST	N/A	★
F13[4]	Traditional flange	¼–18 NPT	Cast C-276	Alloy C-276	N/A	★
F14	Traditional flange	¼–18 NPT	Cast alloy 400	Alloy 400/K-500	N/A	★

Code	Description	Size	Materials of construction			
			Flange material	Drain vent	Bolting	
F15[4]	Traditional flange	¼–18 NPT	SST	Alloy C-276	N/A	★
F22	Traditional flange	RC ¼	SST	316 SST	N/A	★
F23[4]	Traditional flange	RC ¼	Cast C-276	Alloy C-276	N/A	★
F24	Traditional flange	RC ¼	Cast alloy 400	Alloy 400/K-500	N/A	★
F25[4]	Traditional flange	RC ¼	SST	Alloy C-276	N/A	★
F52	DIN-compliant traditional flange	¼–18 NPT	SST	316 SST	7⁄16-inch bolting	★
G11	Vertical mount level flange	2-inch ANSI Class 150	SST	316 SST	N/A	★
G12	Vertical mount level flange	2-inch ANSI Class 300	SST	316 SST	N/A	★
G21	Vertical mount level flange	3-inch ANSI Class 150	SST	316 SST	N/A	★
G22	Vertical mount level flange	3-inch ANSI Class 300	SST	316 SST	N/A	★
G31	Vertical mount level flange	DIN- DN 50 PN 40	SST	316 SST	N/A	★
G41	Vertical mount level flange	DIN- DN 80 PN 40	SST	316 SST	N/A	★
F32	Bottom vent traditional flange	¼–18 NPT	SST	316 SST	N/A	
F42	Bottom vent traditional flange	RC ¼	SST	316 SST	N/A	
F62	DIN-compliant traditional flange	¼–18 NPT	SST	316 SST	M10 bolting	
F72	DIN-compliant traditional flange	¼–18 NPT	SST	316 SST	M12 bolting	

(1) *"Assemble to" items are specified separately and require a completed model number. **Process connection** option codes B12, C11, D11, EA2, EA3, and EA5 are only available on differential **Measurement type**, code D.*
(2) *Consult an Emerson representative for performance specifications.*
(3) *Not available with **Performance class** code 3.*
(4) *Materials of construction comply with metallurgical requirements highlighted within NACE® MR0175/International Organization for Standardization (ISO) 15156 for sour oil field production environments. Environmental limits apply to certain materials. Consult latest standard for details. Selected materials also conform to NACE MR0103 for sour refining environments. Order with Q15 or Q25 to receive a NACE certificate.*

Transmitter output

Code	Description	
A	4–20 mA with digital signal based on HART® protocol	★
F[1]	FOUNDATION™ Fieldbus protocol	★
X[2]	Wireless (requires wireless options and wireless Plantweb™ housing)	★

(1) *Requires Plantweb housing.*
(2) *Only intrinsically safe approval codes apply.*

Housing style

Code	Description	Material	Conduit entry size	
00	None (SuperModule™ spare part, order **Output** code A)	N/A	N/A	★
1A	Plantweb™ housing	Aluminum	½–14 NPT	★

Code	Description	Material	Conduit entry size	
1B	Plantweb™ housing	Aluminum	M20 x 1.5	★
1J	Plantweb housing	SST	½–14 NPT	★
1K	Plantweb housing	Stainless steel (SST)	M20 x 1.5	★
5A(1)	Wireless Plantweb housing	Aluminum	½–14 NPT	★
5J(1)	Wireless Plantweb housing	SST	½–14 NPT	★
2E	Junction box housing with output for remote display and interface	Aluminum	½–14 NPT	★
2F	Junction box housing with output for remote display and interface	Aluminum	M20 x 1.5	★
2M	Junction box housing with output for remote display and interface	SST	½–14 NPT	★
1C	Plantweb housing	Aluminum	G½	
1L	Plantweb housing	SST	G½	
2G	Junction box housing with output for remote display and interface	Aluminum	G½	

(1) *Only available with **Output** code X.*

Wireless options

Update rate

Code	Description	
WA	User configurable update rate	★

Operating frequency and protocol

Code	Description	
3	2.4 GHz direct sequence spread spectrum (DSSS), IEC 62591 (*Wireless*HART®)	★

Omni-directional wireless antenna

Code	Description	
WK	External antenna	★
WM	Extended range, external antenna	★
WJ	Remote antenna	★
WN	High-gain, remote antenna	

SmartPower™

Long-life power module must be shipped separately, order Power Module 701PBKKF.

Code	Description	
1	Adapter for black power module (intrinsically safe [IS] power module sold separately)	★

Additional options

HART® revision configuration (requires HART protocol output code A)

Option HR7 configures the HART output to HART Revision 7. This option requires the selection of the **Advanced diagnostics** (DA2) option. You can field configure a device with this option to HART Revision 5 or 7 if desired.

Code	Description	
HR7	Configured for HART Revision 7	★

Extended product warranty

Code	Description	
WR3	3-year limited warranty	★
WR5	5-year limited warranty	★

Plantweb™ control functionality

Requires **Transmitter output** code F.

Code	Description	
A01	FOUNDATION™ Fieldbus advanced control function block suite	★

Diagnostics suite

Code	Description	
D01	FOUNDATION™ Fieldbus diagnostics suite: ■ **Process Intelligence** ■ **Plugged Impulse Line Diagnostic**	★
DA2(1)	Advanced HART® diagnostics suite: ■ **Process Intelligence** ■ **Loop Integrity** ■ **Plugged Impulse Line Diagnostic** ■ **Process Alerts** ■ **Service Alerts** ■ **Variable Log** ■ **Event Log**	★

(1) *Requires Plantweb™ **Housing style** and **Transmitter output** code A. Includes hardware adjustments as standard.*

Mounting bracket

For **Process connection** option code A11, you must order the mounting bracket as part of the manifold model number.

Code	Description	
B4	Coplanar™ flange bracket, all stainless steel (SST), 2-inch pipe and panel	★
B1	Traditional flange bracket, carbon steel (CS), 2-inch pipe	★
B2	Traditional flange bracket, CS, panel	★

Code	Description	
B3	Traditional flange flat bracket, CS, 2-inch pipe	★
B7	Traditional flange bracket, B1 with SST bolts	★
B8	Traditional flange bracket, B2 with SST bolts	★
B9	Traditional flange bracket, B3 with SST bolts	★
BA	Traditional flange bracket, B1, all SST	★
BC	Traditional flange bracket, B3, all SST	★
BE	316 SST B4-style bracket with 316 SST bolting	★

Software configuration

Code	Description	
C1(1)	Custom software configuration (requires *Configuration Data Sheet*)	★
C2	Custom flow configuration (requires H01 and *Configuration Data Sheet*)	★

(1) *Not available with **Output** code F.*

Gauge pressure calibration

Code	Description	
C3	Gauge pressure calibration on Rosemount 3051S_CA4 only	★

Alarm limit

This is not available with **Output** codes F or X.

Code	Description	
C4	NAMUR alarm and saturation levels, High alarm	★
C5	NAMUR alarm and saturation levels, Low alarm	★
C6	Custom alarm and saturation signal levels, High alarm (requires C1 and *Configuration Data Sheet*)	★
C7	Custom alarm and saturation signal levels, Low alarm (requires C1 and *Configuration Data Sheet*)	★
C8	Low alarm (standard Rosemount alarm and saturation levels)	★

Hardware adjustments

This is not available with **Output** codes F or X and **Housing style** codes 00, 2E, 2F, 2G, 2M, 5A, or 5J.

Code	Description	
D1	Hardware adjustments (**Zero**, **Span**, **Alarm**, **Security**)	★

Flange adapter

This is not available with **Process connection** option code A11.

Code	Description	
D2	½-14 NPT flange adapter	★
D9	RC½ stainless steel (SST) flange adapter	

Custody transfer

Requires Plantweb™ housing and **Hardware adjustments** option code D1. Limited availability depending on transmitter type and range. Contact an Emerson representative for additional information.

Code	Description	
D3	Measurement Canada accuracy approval	★

Ground screw

This assembly is included with options EP, KP, E1, N1, K1, ND, E4, E7, N7, K7, E2, E3, KA, KC, KD, IA, IB, IE, IF, IG, KG, T1, K2, N3, EM, or KM.

Code	Description	
D4	External ground screw assembly	★

Drain/vent valve

This is not available with **Process connection** option code A11.

Code	Description	
D5	Remove transmitter drain/vent valves (install plugs)	★
D7	Stainless steel (SST) Coplanar™ flange without drain/vent ports	

Conduit plug

Emerson ships transmitter with 316 stainless steel (SST) conduit plug (uninstalled) in place of standard aluminum conduit plug.

Code	Description	
DO	316 SST conduit plug	★

Product certifications

Valid when SuperModule™ platform and housing have equivalent approvals.

Code	Description	
E1	ATEX Flameproof	★
I1	ATEX Intrinsic Safety	★
IA	ATEX FISCO Intrinsic Safety (FOUNDATION™ Fieldbus protocol only)	★
N1	ATEX Type n	★
K1	ATEX Flameproof, Intrinsic Safety, Type n, Dust	★
ND	ATEX Dust	★
E4	Japan Flameproof	★
I4[(1)]	Japan Intrinsic Safety	★
E5	USA Explosion-proof, Dust Ignition-proof	★
I5	USA Intrinsically Safe; Nonincendive	★
IE	USA FISCO Intrinsically Safe (FOUNDATION Fieldbus protocol only)	★
K5	USA Explosion-proof, Dust Ignition-proof, Intrinsically Safe, Division 2	★
E6[(2)]	Canada Explosion-proof, Dust Ignition-proof, Division 2	★

Code	Description	
I6	Canada Intrinsically Safe	★
IF	Canada FISCO Intrinsically Safe (FOUNDATION Fieldbus protocol only)	★
K6[2]	Canada Explosion-proof, Dust Ignition-proof, Intrinsically Safe, Division 2	★
E7	IECEx Flameproof, Dust	★
I7	IECEx Intrinsic Safety	★
IG	IECEx FISCO Intrinsic Safety (FOUNDATION Fieldbus protocol only)	★
N7	IECEx Type n	★
K7	IECEx Flameproof, Dust, Intrinsic Safety, Type n	★
E2	Brazil Flameproof	★
I2	Brazil Intrinsic Safety	★
IB	Brazil FISCO Intrinsic Safety	★
K2	Brazil Flameproof, Intrinsic Safety	★
E3	China Flameproof	★
I3	China Intrinsic Safety	★
N3	China Type n	★
EP	Korea Flameproof	★
IP	Korea Intrinsic Safety	★
KP	Korea Flameproof, Intrinsic Safety	★
EM	Technical Regulations Customs Union (EAC) Flameproof	★
IM	Technical Regulations Customs Union (EAC) Intrinsic Safety	★
IN	Technical Regulations Customs Union (EAC) FISCO Intrinsic Safety	★
KM	Technical Regulations Customs Union (EAC) Flameproof, Intrinsic Safety	★
KA[2]	ATEX and Canada Flameproof, Intrinsically Safe, Division 2	★
KB[2]	USA and Canada Explosion-proof, Dust Ignition-proof, Intrinsically Safe, Division 2	★
KC	USA and ATEX Explosion-proof, Intrinsically Safe, Division 2	★
KD[2]	USA, Canada, and ATEX Explosion-proof, Intrinsically Safe	★
KG	USA, Canada, ATEX, and IECEx FISCO Intrinsic Safety	★
KQ	USA, Canada, ATEX Intrinsic Safety Combination	★
KS	USA, Canada, IECEx, ATEX Explosion Proof, Intrinsically Safe, Dust, Non-Incendive, Type-N, Division 2	★
EW	India Flameproof Approval	
IW	India Intrinsic Safety	
IZ	India FISCO Intrinsic Safety	
KW	India Flameproof and Intrinsically Safe	

(1) *Only available with **Output** code X.*
(2) *Not available with M20 or G½ conduit entry size.*

Shipboard approvals

Code	Description	
SBS	American Bureau of Shipping	★

Code	Description	
SBV	Bureau Veritas (BV) Type Approval	★
SDN	Det Norske Veritas (DNV) Type Approval	★
SLL	Lloyd's Register (LR) Type Approval	★

Stainless steel tagging

Code	Description	
Y2	316 stainless steel (SST) nameplate, top tag, wire-on tag(s), and fasteners	★

Sensor fill fluid

Only available on differential and gauge measurement types. Silicone fill fluid is standard.

Code	Description	
L1	Inert sensor fill fluid	★

O-ring

Code	Description	
L2	Graphite-filled PTFE O-ring	★

Bolting material

This is not available with **Process connection** option code A11.

Code	Description	
L4	Austenitic 316 stainless steel (SST) bolts	★
L5	ASTM A 193, Grade B7M bolts	★
L6	Alloy K-500 bolts	★
L7(1)	ASTM A453, Class D, Grade 660 bolts	★
L8	ASTM A193, Class 2, Grade B8M bolts	★

(1) *Bolts are not considered process wetted. In instances where NACE® MR0175/International Organization for Standardization (ISO) 15156 and NACE MR0103 conformance is required for bolting, L7 is the recommended bolting option.*

Display type

Code	Description	
M5	Plantweb™ LCD display	★
M7(1)(2)(3)	Remote mount LCD display and interface, Plantweb housing, no cable, stainless steel (SST) bracket	★
M8(1)(2)	Remote mount LCD display and interface, Plantweb housing, 50 ft. (15 m) cable, SST bracket	★
M9(1)(2)	Remote mount LCD display and interface, Plantweb housing, 100 ft. (31 m) cable, SST bracket	★

(1) *Not available with **Output** code X.*
(2) *Not available with **Output** code F, **Option** code DA2, or **Option** code QT.*
(3) *See the Rosemount 3051S Series Scalable Pressure, Flow, and Level Solution Reference Manual for cable requirements. Contact an Emerson representative for additional information.*

Pressure testing

P1 is not available with Rosemount 3051S_CA0.

Code	Description	
P1	Hydrostatic testing with certificate	

Special cleaning

This is not available with **Process connection** option code A11.

Code	Description	
P2	Cleaning for special services	
P3	Cleaning for special services with testing for <1 ppm chlorine/fluorine	

Maximum static line pressure

Code	Description	
P9(1)	4,500 psig (310 bar) static pressure limit (Rosemount 3051S_CD only)	★
P0(2)	6,092 psig (420 bar) static pressure limit (3051S_CD only)	★

(1) *When assembled to remote diaphragm seal system using B11 or B12 process connections, the maximum working pressure of the system may be limited by the rating of the Rosemount 1199 Seal System selected.*

(2) *Requires 316L stainless steel (SST), alloy C-276, or gold-plated 316L SST diaphragm material; assemble to Rosemount 305 integral manifold or DIN-compliant traditional flange process connection, and **Bolting** option L8. Limited to **Pressure range (differential)**, ranges 2A – 5A.*

Calibration certification

Code	Description	
Q4	Calibration certificate	★
QP	Calibration certificate and tamper evident seal	★

Material traceability certification

Code	Description	
Q8	Material traceability certification per EN 10204 3.1	★

Positive material identification (PMI)

Code	Description	
Q76	PMI verification and certificate	★

Quality certification for safety

Not available with **Output** codes F or X.

Code	Description	
QT	Safety certified to IEC 61508 with certificate of failure mode, effects, and diagnostic analysis (FMEDA)	★

Transient protection

The T1 option is not needed with FISCO **Product certifications**; transient protection is included in the FISCO **Product certifications** codes IA, IB, IE, IF, IG, and KG. This is not available with **Housing** codes 00, 5A, or 5J.

Code	Description	
T1	Transient terminal block	★

Drinking water approval

Requires 316L stainless steel (SST) diaphragm material, glass-filled PTFE O-ring (standard), and **Process connection** codes E12 or F12.

Code	Description	
DW	NSF drinking water approval	★

Surface finish certification

Code	Description	
Q16	Surface finish certification for sanitary remote seals	★

Toolkit total system performance reports

Code	Description	
QZ	Remote seal system performance calculation report	★

Conduit electrical connector

This is not available with **Housing** code 00, 5A, or 5J. Available with Intrinsically Safe (IS) approvals only. For **FM Intrinsically Safe; Nonincendive** (option code I5) or **FM FISCO Intrinsically Safe** (option code IE), install in accordance with Rosemount drawing *03151-1009*. Suitable for use with all IS approvals (I1, I2, I3, I5, I6, I7, IA, IB, IE, IF, IG, IP, IM, KG).

Code	Description	
GE	M12, 4-pin, male connector (eurofast®)	★
GM	A size mini, 4-pin, male connector (minifast®)	★

NACE® certificate

NACE-compliant wetted materials are identified by materials of construction that comply with metallurgical requirements highlighted within NACE MR0175/International Organization for Standardization (ISO) 15156 for sour oil field production environments. Environmental limits apply to certain materials. Consult latest standard for details. Selected materials also conform to NACE MR0103 for sour refining environments. Order with Q15 or Q25 to receive a NACE certificate.

Code	Description	
Q15	Certificate of compliance to NACE MR0175/ISO15156 for wetted materials	★
Q25	Certificate of compliance to NACE MR0103 for wetted materials	★

Cold temperature

This is only available on pressure ranges 1-5, with silicone sensor fill fluid and stainless steel (SST) or C-276 isolating diaphragms.

Code	Description	
BR5	–58 °F (–50 °C) cold temperature operation	★
BR6	–76 °F (–60 °C) cold temperature operation	★

Thread sealants

Code	Description	
Z1	High temperature liquid thread sealant (–65 to +400 °F [–54 to +205 °C] temperature rating)	★
Z2	Liquid thread sealant (–63 to +302 °F [–53 to +150 °C] temperature rating)	★
Z3	Anaerobic PTFE paste	★

Rosemount 3051S In-line Pressure Transmitter



Rosemount 3051S In-line Pressure Transmitters are the industry leader for gauge and absolute pressure measurement. The in-line, compact design allows the transmitter to be connected directly to a process for quick, easy and cost effective installation. Capabilities include:

- Ultra and Classic performance
- 4–20 mA HART®, *Wireless*HART™, FOUNDATION™ Fieldbus protocols
- Safety certification (option code QT)
- Advanced diagnostics (option code DA2)
- Remote display and interface (option codes M7, M8, or M9)

VIEW PRODUCT >

Online product configurator

Many products are configurable online using our product configurator.

Select the **Configure** button or visit Emerson.com/global to start. With this tool's built-in logic and continuous validation, you can configure your products more quickly and accurately.

Specifications and options

The purchaser of the equipment must specify and select:

- Product materials
- Options
- Components

Sizing and selection

Use the Differential Pressure (DP) Level Sizing & Selection Tool to size Rosemount DP Level meters to meet your application-specific requirements.

The Sizing & Selection tool:

1. Verifies if a selected product meets your application requirements.
2. Provide a comparison between different system types.
3. Generates a detailed accuracy comparison graph.

Once a sizing is completed, the configuration tool will help create a complete and valid model code to match your requirements and include any additional options or approvals.

Optimizing lead time

The starred offerings (★) represent the most common options and should be selected for the fastest delivery. The non-starred offerings are subject to additional delivery lead time.

Required model components

Model

Code	Description	
3051S	Scalable™ pressure transmitter	★

Performance class

Code	Description	
1	Ultra: 0.025% span accuracy, 200:1 rangedown, 15-year stability, 15-year limited warranty	★
2	Classic: 0.035% span accuracy, 150:1 rangedown, 15-year stability	★

Connection type

Code	Description	
T	In-line	★

Measurement type

Code	Description	
G	Gauge	★
A	Absolute	★

Pressure range

Code	Description		
	Gauge	**Absolute**	
1A	–14.7 to 30 psi (–1.01 to 2.06 bar)	0 to 30 psia (2.06 bar)	★
2A	–14.7 to 150 psi (–1.01 to 10.34 bar)	0 to 150 psia (10.34 bar)	★
3A	–14.7 to 800 psi (–1.01 to 55.15 bar)	0 to 800 psia (55.15 bar)	★
4A	–14.7 to 4000 psi (–1.01 to 275.79 bar)	0 to 4000 psia (275.79 bar)	★
5A	–14.7 to 10000 psi (–1.01 to 689.47 bar)	0 to 10000 psia (689.47 bar)	★

Isolating diaphragm material

Materials of construction comply with metallurgical requirements highlighted within NACE® MR0175/International Organization for Standardization (ISO) 15156 for sour oil field production environments. Environmental limits apply to certain materials. Consult latest standard for details. Selected materials also conform to NACE MR0103 for sour refining environments. Order with Q15 or Q25 to receive a NACE certificate. Isolator diaphragm selection will dictate materials of construction for wetted parts.

Code	Description	
2	316L Stainless steel (SST)	★
3	Alloy C-276	★

Process connection

Code	Description	
A11(1)	Assemble to Rosemount 306 integral manifold	★
B11(1)(2)	Assemble to one Rosemount 1199 seal	★
E11	½–14 NPT female	★
G11	G½ A DIN 16288 male (range 1–4 only)	★
H11	Coned and threaded, compatible with autoclave type F-250-C (range 5A only)	
F11	Non-threaded instrument flange (I-flange) (range 1–4 only)	

(1) *"Assemble to" items are specified separately and require a completed model number.*
(2) *Consult an Emerson representative for performance specifications.*

Transmitter output

Code	Description	
A	4–20 mA with digital signal based on HART® protocol	★
F(1)	FOUNDATION™ Fieldbus protocol	★
X(2)	Wireless (requires wireless options and wireless Plantweb™ housing)	★

(1) *Requires Plantweb housing.*
(2) *Only intrinsically safe approval codes apply.*

Housing style

Code	Description	Material	Conduit entry size	
00	None (SuperModule™ spare part, order **Output** code A)	N/A	N/A	★
1A	Plantweb™ housing	Aluminum	½–14 NPT	★
1B	Plantweb™ housing	Aluminum	M20 x 1.5	★
1J	Plantweb housing	SST	½–14 NPT	★
1K	Plantweb housing	Stainless steel (SST)	M20 x 1.5	★
5A(1)	Wireless Plantweb housing	Aluminum	½–14 NPT	★
5J(1)	Wireless Plantweb housing	SST	½–14 NPT	★
2E	Junction box housing with output for remote display and interface	Aluminum	½–14 NPT	★
2F	Junction box housing with output for remote display and interface	Aluminum	M20 x 1.5	★
2M	Junction box housing with output for remote display and interface	SST	½–14 NPT	★
1C	Plantweb housing	Aluminum	G½	
1L	Plantweb housing	SST	G½	
2G	Junction box housing with output for remote display and interface	Aluminum	G½	

(1) *Only available with **Output** code X.*

Wireless options

Update rate

Code	Description	
WA	User configurable update rate	★

Operating frequency and protocol

Code	Description	
3	2.4 GHz direct sequence spread spectrum (DSSS), IEC 62591 (*Wireless*HART®)	★

Omni-directional wireless antenna

Code	Description	
WK	External antenna	★
WM	Extended range, external antenna	★
WJ	Remote antenna	★
WN	High-gain, remote antenna	

SmartPower™ housing cover

Long-life power module must be shipped separately; order Power Module 701PBKKF.

Code	Description	
1(1)	Standard life Black Power Module (Intrinsically Safe [IS] power module sold separately)	★
2(2)	Extended life Blue Power Module (IS power module sold separately)	★

(1) *Black Power Module must be shipped separately; order Model 701PBKKF.*
(2) *Blue Power Module must be shipped separately; order part number A0701PBU.*

Additional options

HART® revision configuration (requires HART protocol output code A)

Option HR7 configures the HART output to HART Revision 7. This option requires the selection of the **Advanced diagnostics** (DA2) option. You can field configure a device with this option to HART Revision 5 or 7 if desired.

Code	Description	
HR7	Configured for HART Revision 7	★

Extended product warranty

Code	Description	
WR3	3-year limited warranty	★
WR5	5-year limited warranty	★

Plantweb™ control functionality

Requires **Transmitter output** code F.

Code	Description	
A01	FOUNDATION™ Fieldbus advanced control function block suite	★

Diagnostics suite

Code	Description	
D01	FOUNDATION™ Fieldbus diagnostics suite: ■ **Process Intelligence** ■ **Plugged Impulse Line Diagnostic**	★

Code	Description	
DA2[1]	Advanced HART® diagnostics suite: ■ **Process Intelligence** ■ **Loop Integrity** ■ **Plugged Impulse Line Diagnostic** ■ **Process Alerts** ■ **Service Alerts** ■ **Variable Log** ■ **Event Log**	★

(1) *Requires Plantweb™* ***Housing style*** *and* ***Transmitter output*** *code A. Includes hardware adjustments as standard.*

Mounting bracket

Code	Description	
B4	Bracket, all stainless steel (SST), 2-inch pipe and panel	★
BE	316 SST B4-style bracket with 316 SST bolting	★

Software configuration

This is not available with **Output** code F.

Code	Description	
C1	Custom software configuration (requires *Configuration Data Sheet*)	★

Alarm limit

This is not available with **Output** codes F or X.

Code	Description	
C4	NAMUR alarm and saturation levels, High alarm	★
C5	NAMUR alarm and saturation levels, Low alarm	★
C6	Custom alarm and saturation signal levels, High alarm (requires C1 and *Configuration Data Sheet*)	★
C7	Custom alarm and saturation signal levels, Low alarm (requires C1 and *Configuration Data Sheet*)	★
C8	Low alarm (standard Rosemount alarm and saturation levels)	★

Hardware adjustments

This is not available with **Output** codes F or X and **Housing style** codes 00, 2E, 2F, 2G, 2M, 5A, or 5J.

Code	Description	
D1	Hardware adjustments (**Zero**, **Span**, **Alarm**, **Security**)	★

Custody transfer

Requires Plantweb™ housing and **Hardware adjustments** option code D1. Limited availability depending on transmitter type and range. Contact an Emerson representative for additional information.

Code	Description	
D3	Measurement Canada accuracy approval	★

Ground screw

This assembly is included with options EP, KP, E1, N1, K1, ND, E4, E7, N7, K7, E2, E3, KA, KC, KD, IA, IB, IE, IF, IG, KG, T1, K2, N3, EM, or KM.

Code	Description	
D4	External ground screw assembly	★

Conduit plug

Emerson ships transmitter with 316 stainless steel (SST) conduit plug (uninstalled) in place of standard aluminum conduit plug.

Code	Description	
DO	316 SST conduit plug	★

Product certifications

Valid when SuperModule™ platform and housing have equivalent approvals.

Code	Description	
E1	ATEX Flameproof	★
I1	ATEX Intrinsic Safety	★
IA	ATEX FISCO Intrinsic Safety (FOUNDATION™ Fieldbus protocol only)	★
N1	ATEX Type n	★
K1	ATEX Flameproof, Intrinsic Safety, Type n, Dust	★
ND	ATEX Dust	★
E4	Japan Flameproof	★
I4[(1)]	Japan Intrinsic Safety	★
E5	USA Explosion-proof, Dust Ignition-proof	★
I5	USA Intrinsically Safe; Nonincendive	★
IE	USA FISCO Intrinsically Safe (FOUNDATION Fieldbus protocol only)	★
K5	USA Explosion-proof, Dust Ignition-proof, Intrinsically Safe, Division 2	★
E6[(2)]	Canada Explosion-proof, Dust Ignition-proof, Division 2	★
I6	Canada Intrinsically Safe	★
IF	Canada FISCO Intrinsically Safe (FOUNDATION Fieldbus protocol only)	★
K6[(2)]	Canada Explosion-proof, Dust Ignition-proof, Intrinsically Safe, Division 2	★
E7	IECEx Flameproof, Dust	★
I7	IECEx Intrinsic Safety	★
IG	IECEx FISCO Intrinsic Safety (FOUNDATION Fieldbus protocol only)	★

Code	Description	
N7	IECEx Type n	★
K7	IECEx Flameproof, Dust, Intrinsic Safety, Type n	★
E2	Brazil Flameproof	★
I2	Brazil Intrinsic Safety	★
IB	Brazil FISCO Intrinsic Safety	★
K2	Brazil Flameproof, Intrinsic Safety	★
E3	China Flameproof	★
I3	China Intrinsic Safety	★
N3	China Type n	★
EP	Korea Flameproof	★
IP	Korea Intrinsic Safety	★
KP	Korea Flameproof, Intrinsic Safety	★
EM	Technical Regulations Customs Union (EAC) Flameproof	★
IM	Technical Regulations Customs Union (EAC) Intrinsic Safety	★
IN	Technical Regulations Customs Union (EAC) FISCO Intrinsic Safety	★
KM	Technical Regulations Customs Union (EAC) Flameproof, Intrinsic Safety	★
KA(2)	ATEX and Canada Flameproof, Intrinsically Safe, Division 2	★
KB(2)	USA and Canada Explosion-proof, Dust Ignition-proof, Intrinsically Safe, Division 2	★
KC	USA and ATEX Explosion-proof, Intrinsically Safe, Division 2	★
KD(2)	USA, Canada, and ATEX Explosion-proof, Intrinsically Safe	★
KG	USA, Canada, ATEX, and IECEx FISCO Intrinsic Safety	★
KQ	USA, Canada, ATEX Intrinsic Safety Combination	★
KS	USA, Canada, IECEx, ATEX Explosion Proof, Intrinsically Safe, Dust, Non-Incendive, Type-N, Division 2	★
EW	India Flameproof Approval	
IW	India Intrinsic Safety	
IZ	India FISCO Intrinsic Safety	
KW	India Flameproof and Intrinsically Safe	

(1) *Only available with **Output** code X.*
(2) *Not available with M20 or G½ conduit entry size.*

Shipboard approvals

Code	Description	
SBS	American Bureau of Shipping	★
SBV	Bureau Veritas (BV) Type Approval	★
SDN	Det Norske Veritas (DNV) Type Approval	★
SLL	Lloyd's Register (LR) Type Approval	★

Stainless steel tagging

Code	Description	
Y2	316 stainless steel (SST) nameplate, top tag, wire-on tag(s), and fasteners	★

Sensor fill fluid

Only available on differential and gauge measurement types. Silicone fill fluid is standard.

Code	Description	
L1	Inert sensor fill fluid	★

Display type

Code	Description	
M5	Plantweb™ LCD display	★
M7[(1)(2)(3)]	Remote mount LCD display and interface, Plantweb housing, no cable, stainless steel (SST) bracket	★
M8[(1)(2)]	Remote mount LCD display and interface, Plantweb housing, 50 ft. (15 m) cable, SST bracket	★
M9[(1)(2)]	Remote mount LCD display and interface, Plantweb housing, 100 ft. (31 m) cable, SST bracket	★

(1) *Not available with **Output** code X.*
(2) *Not available with **Output** code F, **Option** code DA2, or **Option** code QT.*
(3) *See the Rosemount 3051S Series Scalable Pressure, Flow, and Level Solution Reference Manual for cable requirements. Contact an Emerson representative for additional information.*

Pressure testing

P1 is not available with Rosemount 3051S_CA0.

Code	Description	
P1	Hydrostatic testing with certificate	

Special cleaning

This is not available with **Process connection** option code A11.

Code	Description	
P2	Cleaning for special services	
P3	Cleaning for special services with testing for <1 ppm chlorine/fluorine	

Calibration certification

Code	Description	
Q4	Calibration certificate	★
QP	Calibration certificate and tamper evident seal	★

Material traceability certification

Code	Description	
Q8	Material traceability certification per EN 10204 3.1	★

Positive material identification (PMI)

Code	Description	
Q76	PMI verification and certificate	★

Quality certification for safety

Not available with **Output** codes F or X.

Code	Description	
QT	Safety certified to IEC 61508 with certificate of failure mode, effects, and diagnostic analysis (FMEDA)	★

Transient protection

The T1 option is not needed with FISCO product certifications; transient protection is included in the FISCO product certification codes IA, IB, IE, IF, IG, and KG. Not available with **Housing** code 00, 5A, or 5J.

Code	Description	
T1	Transient terminal block	★

Drinking water approval

Requires 316L stainless steel (SST) diaphragm material, glass-filled PTFE O-ring (standard), and **Process connection** codes E12 or F12.

Code	Description	
DW	NSF drinking water approval	★

Surface finish certification

Code	Description	
Q16	Surface finish certification for sanitary remote seals	★

Toolkit total system performance reports

Code	Description	
QZ	Remote seal system performance calculation report	★

Conduit electrical connector

This is not available with **Housing** codes 5A or 5J.

Available with intrinsically safe approvals only. For FM Intrinsically Safe; Nonincendive option code I5 or FM FISCO Intrinsically Safe (option code IE), install in accordance with Rosemount drawing *03151-1009*.

Code	Description	
GE	M12, 4-pin, male connector (eurofast®)	★
GM	A size mini, 4-pin, male connector (minifast®)	★

NACE® certificate

NACE-compliant wetted materials are identified by materials of construction that comply with metallurgical requirements highlighted within NACE MR0175/International Organization for Standardization (ISO) 15156 for sour oil field production environments. Environmental limits apply to certain materials. Consult latest standard for details. Selected materials also conform to NACE MR0103 for sour refining environments. Order with Q15 or Q25 to receive a NACE certificate.

Code	Description	
Q15	Certificate of compliance to NACE MR0175/ISO15156 for wetted materials	★
Q25	Certificate of compliance to NACE MR0103 for wetted materials	★

Cold temperature

This is only available on pressure ranges 1-5, with silicone sensor fill fluid and stainless steel (SST) or C-276 isolating diaphragms.

Code	Description	
BR5	–58 °F (–50 °C) cold temperature operation	★
BR6	–76 °F (–60 °C) cold temperature operation	★

Rosemount 3051S MultiVariable™ Transmitter



The 3051S MultiVariable Transmitter delivers unprecedented performance and capabilities by providing superior flow calculations including fully compensated mass or volume, energy, and totalized flow. Specify the level of compensation that best matches the application:

- Gas, natural gas, and steam measurement: Use full compensation (differential pressure, line pressure, and temperature measurement).
- Saturated steam: Use differential and line pressure, or differential pressure and temperature measurement.
- Liquids: Use differential pressure and temperature measurement.
- Liquids at stable temperatures: Use differential pressure measurement.
- 4–20 mA HART®, *Wireless*HART®, FOUNDATION™ Fieldbus protocols

VIEW PRODUCT >

Online product configurator

Many products are configurable online using our product configurator.

Select the **Configure** button or visit Emerson.com/global to start. With this tool's built-in logic and continuous validation, you can configure your products more quickly and accurately.

Specifications and options

The purchaser of the equipment must specify and select:

- Product materials
- Options
- Components

Sizing and selection

Use the Differential Pressure (DP) Level Sizing & Selection Tool to size Rosemount DP Level meters to meet your application-specific requirements.

The Sizing & Selection tool:

1. Verifies if a selected product meets your application requirements.
2. Provide a comparison between different system types.
3. Generates a detailed accuracy comparison graph.

Once a sizing is completed, the configuration tool will help create a complete and valid model code to match your requirements and include any additional options or approvals.

Optimizing lead time

The starred offerings (★) represent the most common options and should be selected for the fastest delivery. The non-starred offerings are subject to additional delivery lead time.

Required model components

Model

Code	Description
3051SMV	Scalable MultiVariable™ transmitter

Performance class

Code	Description	
Measurement types 1 and 2		
3(1)	Ultra for Flow: 0.04 % reading differential pressure (DP) accuracy, 200:1 rangedown,15-year stability, 15-year limited warranty	★
5	Classic MultiVariable™ (MV): 0.04 % span DP accuracy, 100:1 rangedown, 15-year stability	★
Measurement types 3 and 4		
1	Ultra: 0.025 % span DP accuracy, 200:1 rangedown, 15-year stability, 15-year limited warranty	★
2	Classic: 0.035 % span DP accuracy, 150:1 rangedown, 15-year stability	★
3(1)	Ultra for Flow: 0.04% reading DP accuracy, 200:1 rangedown,15-year stability, 15-year limited warranty	★

(1) *For measurement types 1 and 2, only available with DP range codes 2, 3, and 4, 316L stainless steel (SST) and alloy C-276 isolating diaphragm and silicone fill fluid. For measurements types 3 and 4, only available with DP range codes 2 and 3, 316L SST and alloy C-276 isolating diaphragm and silicone fill fluid.*

MultiVariable™ type

Code	Description	
M	Measurement with fully compensated mass and energy(1) flow calculations	★
P	Measurement of process variables only (no flow calculations)	★

(1) *Only available with **Transmitter output** code A.*

Measurement type

Code	Description	
1	Differential pressure, static pressure, and temperature	★
2	Differential pressure and static pressure	★
3	Differential pressure and temperature	★
4	Differential pressure	★

Differential pressure (DP) range

If ordering **Measurement type** code M, **DP range** 4 and 5 are not available.

Code	Description	
0(1)	–3 to +3 inH_2O (–7.46 to +7.46 mbar)	★
1	–25 to +25 inH_2O (–62.16 to +62.16 mbar)	★
2	–250 to +250 inH_2O (–621.60 to +621.60 mbar)	★
3	–1000 to +1000 inH_2O (–2.48 to +2.48 bar)	★
4(2)	–150 to +150 psi (–10.34 to +10.34 bar) for measurement types 1 and 2; –300 to +300 psi (–20.68 to +20.68 bar) for measurement types 3 and 4	★
5(2)	–2000 to +2000 psi (–137.89 to +137.89 bar)	★

(1) ***DP range*** *0 is only available with* ***Measurement type*** *3 or 4, traditional flange, 316L stainless steel (SST) diaphragm material, and* ***Bolting*** *option L4.*
(2) ***DP range*** *4 and 5 is only available with* ***Static pressure range*** *N or 4 and alloy C-276 diaphragm material.*

Static pressure type

Code	Description	
N(1)	None	★
A	Absolute	★
G	Gauge	★

(1) *Required for* ***Measurement type*** *codes 3 and 4.*

Static pressure range

Code	Description	Absolute	Gage	
N(1)	None	N/A	N/A	★
3	Range 3	0.5 to 800 psia (0.03 to 55.15 bar)	–14.2 to +800 psig (–0.98 to +55.15 bar)	★
4(2)	Range 4	0.5 to 3,626 psia (0.03 to 250 bar)	–14.2 to 3,626 psig (–0.98 to +250 bar)	★
5(3)(4)(5)	Range 5	N/A	–14.2 to +6,092 psi (420 bar)	★

(1) *Required for* ***Measurement type*** *codes 3 and 4.*
(2) *For* ***Measurement type*** *codes 1 and 2 with* ***Differential pressure (DP) range*** *1, absolute limits are 0.5 to 2,000 psi (0.03 to 137.9 bar), and gauge limits are –14.2 to +2,000 psig (–0.98 to +137.9 bar).*
(3) ***Static pressure range*** *5 is only available with* ***DP range*** *2, 3, or 4,* ***Bolting type*** *L8, and* ***Static pressure type*** *G and requires* ***Isolating diaphragm*** *2 or 3 as well as* ***Process connection*** *000, A11, F52, or F72.*
(4) ***Static pressure range*** *5 is a sealed gauge sensor.*
(5) *For temperature range –40 to –20 °F (–40 to –29 °C), upper range limit (URL) is 4,500 psi (310.26 bar); for temperature range –20 to +185 °F (–29 to + 85 °C), URL is 6,092 psi (420 bar).*

Temperature input

Code	Description	
N[1]	None	★
R[2]	RTD input (type Pt 100, –328°F to +1562°F [–200°C to +850°C])	★

(1) *Required for **Measurement type** codes 2 and 4.*
(2) *Required for **Measurement type** codes 1 and 3. RTD sensor must be ordered separately.*

Isolating diaphragm

Code	Description	
2[1]	316L stainless steel (SST)	★
3[1]	Alloy C-276	★
5[2]	Tantalum	
7[1]	Gold-plated 316L SST	

(1) *Materials of construction comply with metallurgical requirements highlighted within NACE® MR0175/International Organization for Standardization (ISO) 15156 for sour oil field production environments Environmental limits apply to certain materials. Consult latest standard for details. Selected materials also conform to NACE MR0103 for sour refining environments. Order with Q15 or Q25 to receive a NACE certificate.*
(2) *Tantalum diaphragm material is only available for **Differential pressure range** 2-5.*

Process connection

Code	Description	Size	Material type			
			Flange material	Drain vent	Bolting	
000	None (no process flange)	N/A	N/A	N/A	N/A	★
A11[1]	Assemble to Rosemount 305/306 integral manifold	N/A	N/A	N/A	N/A	★
A12[1]	Assemble to Rosemount 304 or AMF manifold with stainless steel (SST) traditional flange	N/A	N/A	N/A	N/A	★
A15[1]	Assemble to 304 or AMF manifold to SST traditional flange with alloy C-276 drain vents	N/A	N/A	N/A	N/A	★
A16[1]	Assemble to 304 or AMF manifold to DIN SST traditional flange	N/A	N/A	N/A	N/A	★
A22	Assemble to Rosemount 304 or AMF manifold to SST Coplanar™ flange	N/A	N/A	N/A	N/A	★
B11[1][2]	Assemble to one Rosemount 1199 seal	N/A	N/A	N/A	N/A	★
B12[1][2]	Assemble to two 1199 seals	N/A	N/A	N/A	N/A	★
C11[1]	Assemble to Rosemount 405C or 405P primary element	N/A	N/A	N/A	N/A	★
D11[1]	Assemble to Rosemount 1195 integral orifice and 305 integral manifold	N/A	N/A	N/A	N/A	★

Code	Description	Size	Material type			
			Flange material	Drain vent	Bolting	
D21[3]	Assemble to Rosemount 9175 Meter Run, 304 5-valve Natural Gas Manifold, and stabilized connectors	N/A	N/A	N/A	N/A	★
EA2[1]	Assemble to Rosemount 485 or 405A Annubar™ primary element with Coplanar flange	N/A	SST	316 SST	N/A	★
EA3[1]	Assemble to 485 or 405A Annubar primary element with Coplanar flange	N/A	Cast C-276	Alloy C-276	N/A	★
EA5[1]	Assemble to 485 or 405A Annubar primary element with Coplanar flange	N/A	SST	Alloy C-276	N/A	★
E11	Coplanar flange	¼–18 NPT	Carbon steel	316 SST	N/A	★
E12	Coplanar flange	¼–18 NPT	SST	316 SST	N/A	★
E13[4]	Coplanar flange	¼–18 NPT	Cast C-276	Alloy C-276	N/A	★
E14	Coplanar flange	¼–18 NPT	Alloy 400	Alloy 400/K-500	N/A	★
E15[4]	Coplanar flange	¼–18 NPT	SST	Alloy C-276	N/A	★
E16[4]	Coplanar flange	¼–18 NPT	Carbon steel	Alloy C-276	N/A	★
E21	Coplanar flange	RC ¼	Carbon steel	316 SST	N/A	★
E22	Coplanar flange	RC ¼	SST	316 SST	N/A	★
E23[4]	Coplanar flange	RC ¼	Cast C-276	Alloy C-276	N/A	★
E25[4]	Coplanar flange	RC ¼	SST	Alloy C-276	N/A	★
E26[4]	Coplanar flange	RC ¼	Carbon steel	Alloy C-276	N/A	★
F12	Traditional flange	¼–18 NPT	SST	316 SST	N/A	★
F13[4]	Traditional flange	¼–18 NPT	Cast C-276	Alloy C-276	N/A	★
F14	Traditional flange	¼–18 NPT	Cast Alloy 400	Alloy 400/K-500	N/A	★
F15[4]	Traditional flange	¼–18 NPT	SST	Alloy C-276	N/A	★
F22	Traditional flange	RC ¼	SST	316 SST	N/A	★
F23[4]	Traditional flange	RC ¼	Cast C-276	Alloy C-276	N/A	★
F24	Traditional flange	RC ¼	Cast alloy 400	Alloy 400/K-500	N/A	★
F25[4]	Traditional flange	RC ¼	SST	Alloy C-276	N/A	★
F52	DIN-compliant traditional flange	¼–18 NPT	SST	316 SST	7⁄16-in. bolting	★
G11	Vertical mount level flange	2-in. ANSI Class 150	SST	N/A	N/A	★
G12	Vertical mount level flange	2-in. ANSI Class 300	SST	N/A	N/A	★
G14[4]	Vertical mount level flange	2-in. ANSI Class 150	Cast C-276	N/A	N/A	★
G15[4]	Vertical mount level flange	2-in. ANSI Class 300	Cast C-276	N/A	N/A	★
G21	Vertical mount level flange	3-in. ANSI Class 150	SST	N/A	N/A	★
G22	Vertical mount level flange	3-in. ANSI Class 300	SST	N/A	N/A	★
G31	Vertical mount level flange	DIN- DN 50 PN 40	SST	N/A	N/A	★
F32	Bottom vent traditional flange	¼–18 NPT	SST	316 SST	N/A	

Code	Description	Size	Material type			
			Flange material	Drain vent	Bolting	
F42	Bottom vent traditional flange	RC ¼	SST	316 SST	N/A	
F62	DIN-compliant traditional flange	¼–18 NPT	SST	316 SST	M10 bolting	
F72	DIN-compliant traditional flange	¼–18 NPT	SST	316 SST	M12 bolting	
G41	Vertical mount level flange	DIN- DN 80 PN 40	SST	N/A	N/A	

(1) *"Assemble to" items are specified separately and require a completed model number.*
(2) *Consult an Emerson representative for performance specifications.*
(3) *Option only available with **Measurement type** 1.*
(4) *Materials of construction comply with metallurgical requirements highlighted within NACE® MR0175/ International Organization for Standardization (ISO) 15156 for sour oil field production environments. Environmental limits apply to certain materials. Consult latest standard for details. Selected materials also conform to NACE MR0103 for sour refining environments. Order with Q15 or Q25 to receive a NACE certificate.*

Transmitter output

Code	Description	
A	4–20 mA with digital signal based on HART® protocol	★
X(1)	Wireless (requires wireless options and wireless Plantweb™ housing)	★
F(2)(3)	FOUNDATION™ Fieldbus	★

(1) *Only available with **Measurement type** 2 and MultiVariable™ type P.*
(2) ***Transmitter output** code F is not available with **Performance class** 1 and 2 and **Measurement type** 3 and 4.*
(3) *If ordered with **Static pressure range** 5, only available with **MultiVariable type** P.*

Housing style

Code	Description	Material	Conduit entry size	
1A	Plantweb™ housing	Aluminum	½–14 NPT	★
1B	Plantweb housing	Aluminum	M20 x 1.5	★
1J	Plantweb housing	Stainless steel (SST)	½–14 NPT	★
1K	Plantweb housing	SST	M20 x 1.5	★
5A(1)	Wireless Plantweb housing	Aluminum	½–14 NPT	★
5J(1)	Wireless Plantweb housing	SST	½–14 NPT	★
1C	Plantweb housing	Aluminum	G½	
1L	Plantweb housing	SST	G½	

(1) *Only available with **Output code** X.*

Wireless options

Update rate

Code	Description	
WA	User configurable update rate	★

Operating frequency and protocol

Code	Description	
3	2.4 GHz direct sequence spread spectrum (DSSS), IEC 62591 (*Wireless*HART®)	★

Omni-directional wireless antenna

Code	Description	
WK	External antenna (Intrinsically Safe [IS] Power Module sold separately)	★
WM	Extended range, external antenna (IS power module sold separately)	★
WJ	Remote antenna (IS power module sold separately)	★
WN	High-gain, remote antenna (IS power module sold separately)	

SmartPower™ housing cover

Long-life power module must be shipped separately; order Power Module 701PBKKF.

Code	Description	
1(1)	Standard life Black Power Module (Intrinsically Safe [IS] power module sold separately)	★
2(2)	Extended life Blue Power Module (IS power module sold separately)	★

(1) *Black Power Module must be shipped separately; order Model 701PBKKF.*
(2) *Blue Power Module must be shipped separately; order part number A0701PBU.*

Additional options

Extended product warranty

Code	Description	
WR3	3-year limited warranty	★
WR5	5-year limited warranty	★

RTD cable

RTD sensor must be ordered separately.

Code	Description	
C12	RTD input with 12 ft. (3.66 m) of shielded cable	★
C13	RTD input with 24 ft. (7.32 m) of shielded cable	★
C14	RTD input with 75 ft. (22.86 m) of shielded cable	★
C22	RTD input with 12 ft. (3.66 m) of armored shielded cable	★
C23	RTD input with 24 ft. (7.32 m) of armored shielded cable	★
C24	RTD input with 75 ft. (22.86 m) of armored shielded cable	★
C32	RTD input with 12 ft. (3.66 m) of ATEX/IECEx Flameproof cable	★
C33	RTD input with 24 ft. (7.32 m) of ATEX/IECEx Flameproof cable	★
C34	RTD input with 75 ft. (22.86 m) of ATEX/IECEx Flameproof cable	★

Plantweb™ control functionality

Requires **Transmitter output** code F.

Code	Description	
A01	FOUNDATION™ Fieldbus advanced control function block suite	★

Mounting bracket

For **Process connection** option code A11, you must order the mounting bracket as part of the manifold model number.

Code	Description	
B4	Coplanar™ flange bracket, all stainless steel (SST), 2-inch pipe and panel	★
B1	Traditional flange bracket, carbon steel (CS), 2-inch pipe	★
B2	Traditional flange bracket, CS, panel	★
B3	Traditional flange flat bracket, CS, 2-inch pipe	★
B7	Traditional flange bracket, B1 with SST bolts	★
B8	Traditional flange bracket, B2 with SST bolts	★
B9	Traditional flange bracket, B3 with SST bolts	★
BA	Traditional flange bracket, B1, all SST	★
BC	Traditional flange bracket, B3, all SST	★
BE	316 SST B4-style bracket with 316 SST bolting	★

Software configuration

Code	Description	
C1(1)	Custom software configuration (Rosemount 3051S MultiVariable™ Configuration Data Sheet must be completed for HART® devices. Rosemount 3051S MultiVariable Wireless Configuration Data Sheet must be completed for *Wireless*HART™ devices.)	★
C2(2)	Custom flow configuration (DP Flow Configuration Data Sheet must be completed. Additionally, either Rosemount 3051S MultiVariable™ Configuration Data Sheet or Rosemount 3051S Multivariable with FOUNDATION™ Fieldbus protocol Configuration Data Sheet must be completed.)	★

(1) *Not available with **Transmitter output** code F.*
(2) *Not available with **Transmitter output** code X.*

Alarm limits

This is not available with **Transmitter output** code F and X.

Code	Description	
C4	NAMUR alarm and saturation levels, High alarm	★
C5	NAMUR alarm and saturation levels, Low alarm	★
C6	Custom alarm and saturation signal levels, High alarm	★
C7	Custom alarm and saturation signal levels, Low alarm	★
C8	Low alarm (standard Rosemount alarm and saturation levels)	★

Flange adapter

This is not available with **Process connection** option code A11.

Code	Description	
D2	½-14 NPT flange adapter	★
D9	RC½ stainless steel (SST) flange adapter	

Ground screw

This assembly is included with options EP, KP, E1, N1, K1, ND, E4, E7, N7, K7, E2, E3, KA, KC, KD, IA, IB, IE, IF, IG, KG, T1, K2, N3, EM, or KM.

Code	Description	
D4	External ground screw assembly	★

Drain/vent valve

This is not available with **Process connection** option code A11.

Code	Description	
D5	Remove transmitter drain/vent valves (install plugs)	★
D7	Stainless steel (SST) Coplanar™ flange without drain/vent ports	

Conduit plug

Emerson ships transmitter with 316 stainless steel (SST) conduit plug (uninstalled) in place of standard aluminum conduit plug.

Code	Description	
DO	316 SST conduit plug	★

Product certifications

Code	Description	
E1	ATEX Flameproof	★
I1	ATEX Intrinsic Safety	★
IA[(1)]	ATEX FISCO Intrinsic Safety	★
N1	ATEX Type n	★
ND	ATEX Dust	★
K1	ATEX Flameproof, Intrinsic Safety, Type n, Dust (combination of E1, I1, N1, and ND)	★
E4	Japan Flameproof	★
E5	USA Explosion-proof, Dust Ignition-proof	★
I5	USA Intrinsically Safe; Nonincendive	★
IE[(1)]	USA FISCO Intrinsic Safety	★
K5	USA Explosion-proof, Dust Ignition-proof, Intrinsically Safe, Division 2 (combination of E5 and I5)	★
E6[(2)]	Canada Explosion-proof, Dust Ignition-proof, Division 2	★
I6	Canada Intrinsically Safe	★
IF[(1)]	Canada FISCO Intrinsic Safety	★

Code	Description	
K6[2]	Canada Explosion-proof, Dust Ignition-proof, Intrinsically Safe, Division 2 (combination of E6 and I6)	★
E7	IECEx Flameproof, Dust Ignition-proof	★
I7	IECEx Intrinsic Safety	★
IG[1]	IECEx FISCO Intrinsic Safety	★
N7	IECEx Type n	★
K7	IECEx Flameproof, Dust Ignition-proof, Intrinsic Safety, and Type n (combination of E7, I7, and N7)	★
E2	Brazil Flameproof	★
I2	Brazil Intrinsic Safety	★
E3	China Flameproof	★
I3	China Intrinsic Safety	★
EM	Technical Regulations Customs Union (EAC) Flameproof	★
IM	Technical Regulations Customs Union (EAC) Intrinsic Safety	★
KM	Technical Regulations Customs Union (EAC) Flameproof, Intrinsic Safety	★
KA[2][3]	ATEX and Canada Explosion-proof, Intrinsically Safe, Division 2 (combination of E1, E6, I1, and I6)	★
KB[2][3]	USA and Canada Explosion-proof, Dust Ignition-proof, Intrinsically Safe, Division 2 (combination of E5, E6, I5, and I6)	★
KC	USA and ATEX Explosion-proof, Intrinsically Safe, Division 2 (combination of E5, E1, I5, and I1)	★
KD[2][3]	USA, Canada, and ATEX Explosion-proof, Intrinsically Safe (combination of E5, E6, E1, I5, I6, and I1)	★
KG[1]	ATEX, USA, Canada, and IECEx FISCO Intrinsic Safety (combination of IA, IE, IF, and IG)	★
K2	Brazil Flameproof, Intrinsic Safety (Combination of E2 and I2)	★
EP	Korea Flameproof	★
IP	Korea Intrinsic Safety	★
KP	Korea Flameproof, Intrinsic Safety	★
KS	USA, Canada, IECEx, ATEX Explosion Proof, Intrinsically Safe, Dust, Non-Incendive, Type-N, Division 2	★

(1) *FISCO is only available with **Transmitter output** code F.*
(2) *Not available with M20 or G½ conduit entry size.*
(3) *RTD cable not available with this option.*

Drinking water approval

Requires 316L stainless steel (SST) diaphragm material, glass-filled PTFE O-ring (standard), and **Process connection** codes E12 or F12.

Code	Description	
DW	NSF drinking water approval	★

Shipboard approvals

This is not available with **Transmitter output** code F.

Code	Description	
SBS	American Bureau of Shipping	★
SBV	Bureau Veritas (BV) Type Approval	★
SDN	Det Norske Veritas (DNV) Type Approval	★

Code	Description	
SLL	Lloyds Register (LR) Type Approvals	★

Stainless steel tagging

Code	Description	
Y2	316 stainless steel (SST) nameplate, top tag, wire-on tag(s), and fasteners	★

Sensor fill fluid

Only available on differential and gauge measurement types. Silicone fill fluid is standard.

Code	Description	
L1	Inert sensor fill fluid	★

O-ring

Code	Description	
L2	Graphite-filled PTFE O-ring	★

Bolting material

This is not available with **Process connection** option code A11.

Code	Description	
L4	Austenitic 316 stainless steel (SST) bolts	★
L5	ASTM A 193, Grade B7M bolts	★
L6	Alloy K-500 bolts	★
L7(1)	ASTM A453, Class D, Grade 660 bolts	★
L8	ASTM A193, Class 2, Grade B8M bolts	★

(1) *Bolts are not considered process wetted. In instances where NACE® MR0175/International Organization for Standardization (ISO) 15156 and NACE MR0103 conformance is required for bolting, L7 is the recommended bolting option.*

Digital display

Code	Description	
M5	Plantweb™ LCD display	★

Wireless assembly options

This is only available with **Transmitter output** code A.

Code	Description	
WTA	Integral assembly to Emerson Wireless THUM™ Adapter (specified separately)	★

Pressure testing

Code	Description	
P1[1]	Hydrostatic testing with certificate	

(1) *Not available with **Differential pressure range** 0.*

Maximum static line pressure

Code	Description	
P9[1][2]	4,500 psig (310 bar) static pressure limit	★
P0[1][3]	6,092 psig (420 bar) static pressure limit	★

(1) *Only available with **Measurement type** codes 3 and 4.*
(2) *When assembled to remote diaphragm seal system using B11 or B12 process connections, the maximum working pressure of the system may be limited by the rating of the Rosemount 1199 Seal System selected.*
(3) *Requires 316L stainless steel (SST) or alloy C-276 diaphragm material, assemble to Rosemount 305 Integral Manifold or DIN-compliant traditional flange process connection, and **Bolting** option L8. Limited to **Differential pressure ranges** 2-5.*

Special cleaning

This is not available with **Process connection** option code A11.

Code	Description	
P2	Cleaning for special services	
P3	Cleaning for special services with testing for <1 ppm chlorine/fluorine	

Calibration certification

Code	Description	
Q4	Calibration certificate	★
QP	Calibration certificate and tamper evident seal	★

Material traceability certification

Code	Description	
Q8	Material traceability certification per EN 10204 3.1	★

Positive material identification (PMI)

Code	Description	
Q76	PMI verification and certificate	★

Surface finish certification

Code	Description	
Q16	Surface finish certification for sanitary remote seals	★

Toolkit total system performance reports

Code	Description	
QZ	Remote seal system performance calculation report	★

Quality certification for safety

Not available with **Output** codes F or X.

Code	Description	
QT	Safety certified to IEC 61508 with certificate of failure mode, effects, and diagnostic analysis (FMEDA)	★

Transient protection

The T1 option is not needed with FISCO **Product certifications**; transient protection is included in the FISCO **Product certifications** codes IA, IB, IE, IF, IG, and KG. This is not available with **Housing** codes 00, 5A, or 5J.

Code	Description	
T1	Transient terminal block	★

Conduit electrical connector

Code	Description	
GE	M12, 4-pin, male connector (eurofast®)	★
GM	A size mini, 4-pin, male connector (minifast®)	★

NACE® certificate

NACE-compliant wetted materials are identified by materials of construction that comply with metallurgical requirements highlighted within NACE MR0175/International Organization for Standardization (ISO) 15156 for sour oil field production environments. Environmental limits apply to certain materials. Consult latest standard for details. Selected materials also conform to NACE MR0103 for sour refining environments. Order with Q15 or Q25 to receive a NACE certificate.

Code	Description	
Q15	Certificate of compliance to NACE MR0175/ISO15156 for wetted materials	★
Q25	Certificate of compliance to NACE MR0103 for wetted materials	★

Cold temperature

This is not available with **Transmitter output** code F and **Static pressure range** 5.

Code	Description	
BRR	–58 °F (–50 °C) cold temperature start-up	★

Rosemount 3051SF Differential Pressure (DP) Flow Meters

Online product configurator

Many products are configurable online using our product configurator.

Select the **Configure** button or visit Emerson.com/global to start. With this tool's built-in logic and continuous validation, you can configure your products more quickly and accurately.

Specifications and options

The purchaser of the equipment must specify and select:

- Product materials
- Options
- Components

Sizing and selection

Use the Differential Pressure (DP) Level Sizing & Selection Tool to size Rosemount DP Level meters to meet your application-specific requirements.

The Sizing & Selection tool:

1. Verifies if a selected product meets your application requirements.
2. Provide a comparison between different system types.
3. Generates a detailed accuracy comparison graph.

Once a sizing is completed, the configuration tool will help create a complete and valid model code to match your requirements and include any additional options or approvals.

Optimizing lead time

The starred offerings (★) represent the most common options and should be selected for the fastest delivery. The non-starred offerings are subject to additional delivery lead time.

Rosemount 3051SFA Annubar™ Flow Meter



- Rosemount Annubar Flow Meters reduce permanent pressure loss by creating less blockage in the pipe.
- Ideal for large line size installations when cost, size, and weight of the flow meter are concerns.
- Typical 3051SFA model code: 3051SFA D L 060 D C H P S 2 T1 0 0 0 3 2A A 1A 3

Specification and selection of product materials, options, or components must be made by the purchaser of the equipment.

For additional technical data and ordering information for Rosemount Annubar Primary Elements, refer to the Rosemount DP Flow meters and Primary Elements Product Data Sheet.

CONFIGURE > VIEW PRODUCT >

• = Available
— = Unavailable

Required model components

Model

Code	Description	Measurement type		
		D	1-7	
3051SFA	Annubar™ Flow Meter	•	•	★

Measurement type

Code	Description	Measurement type		
		D	1–7	
1	Fully compensated mass and energy flow calculations – differential and static pressures with temperature	—	•	★
2	Compensated flow calculations – differential and static pressures	—	•	★
3	Compensated flow calculations – differential pressure and temperature	—	•	★
4	Compensated flow calculations – differential pressure	—	•	★
5	Process variables only (no flow calculations) – differential and static pressures with temperature	—	•	★
6	Process variables only (no flow calculations) – differential and static pressures	—	•	★
7	Process variables only (no flow calculations) – differential pressure and temperature	—	•	★
D	Differential pressure	•	—	★

Fluid type

Code	Description	Measurement type		
		D	1-7	
L	Liquid	•	•	★
G	Gas	•	•	★
S	Steam	•	•	★

Line size

Actual units are built to customer supplied pipe inner dimension (ID) and wall dimensions. Line size codes in model are used as a nominal size and auto-selected by the sizing program.

Code	Description	Measurement type		
		D	1-7	
020	2 in. (50 mm)	•	•	★
025	2½ in. (64 mm)	•	•	★
030	3 in. (80 mm)	•	•	★
035	3½ in. (89 mm)	•	•	★
040	4 in. (100 mm)	•	•	★
050	5 in. (125 mm)	•	•	★
060	6 in. (150 mm)	•	•	★
070	7 in. (175 mm)	•	•	★
080	8 in. (200 mm)	•	•	★
100	10 in. (250 mm)	•	•	★
120	12 in. (300 mm)	•	•	★
140	14 in. (350 mm)	•	•	
160	16 in. (400 mm)	•	•	
180	18 in. (450 mm)	•	•	
200	20 in. (500 mm)	•	•	
240	24 in. (600 mm)	•	•	
300	30 in. (750 mm)	•	•	
360	36 in. (900 mm)	•	•	
420	42 in. (1,066 mm)	•	•	
480	48 in. (1,210 mm)	•	•	
600	60 in. (1,520 mm)	•	•	
720	72 in. (1,820 mm)	•	•	
780	78 in. (1,950 mm)	•	•	
840	84 in. (2,100 mm)	•	•	
900	90 in. (2,250 mm)	•	•	
960	96 in. (2,400 mm)	•	•	

Pipe inner dimension (ID) range

Code	Description	Measurement type		
		D	1-7	
Z	Custom manufactured for customer-supplied pipe ID	•	•	★

Pipe material/mounting assembly material

Code	Description	Measurement type		
		D	1-7	
C	Carbon steel (A105)	•	•	★
S	316 stainless steel	•	•	★
0[1]	No mounting [2]	•	•	★
G	Chrome-Moly Grade F-11	•	•	
N	Chrome-Moly Grade F-22	•	•	
J	Chrome-Moly Grade F-91	•	•	

(1) *For customer supplied mounting or isolation valve, provide relevant dimension at time of sizing and order.*
(2) *Customer supplied.*

Piping orientation

Code	Description	Measurement type		
		D	1-7	
H	Horizontal piping	•	•	★
D	Vertical piping with downwards flow	•	•	★
U	Vertical piping with upwards flow	•	•	★

Annubar™ type

Code	Description	Measurement type		
		D	1-7	
P	Pak-Lok	•	•	★
F	Flanged with opposite side support	•	•	★
L	Flange-Lok	•	•	
G	Gear-Drive Flo-Tap	•	•	
M	Manual Flo-Tap	•	•	

Sensor material

Code	Description	Measurement type		
		D	1-7	
S	316 Stainless steel	•	•	★
H	Alloy C-276	•	•	

Sensor size

Code	Description	Measurement type		
		D	1-7	
1	Sensor size 1 — Line sizes 2 - 8 in. (50 - 200 mm)	•	•	★
2	Sensor size 2 — Line sizes 6 - 96 in. (150 - 2,400 mm)	•	•	★
3	Sensor size 3 — Line sizes greater than 12 in. (300 mm)	•	•	★

Mounting type

Code	Description	Measurement type		
		D	1-7	
T1	Compression/threaded connection	•	•	★
A1	Class 150 RF American Society of Mechanical Engineers (ASME) B16.5	•	•	★
A3	Class 300 RF ASME B16.5	•	•	★
A6	Class 600 RF ASME B16.5	•	•	★
A9(1)	Class 900 RF ASME B16.5	•	•	
AF(1)	Class 1500 RF ASME B16.5	•	•	
AT(1)	Class 2500 RF ASME B16.5	•	•	
D1	PN16 EN-1092-1 RF	•	•	★
D3	PN40 EN-1092-1 RF	•	•	★
D6	PN100 EN-1092-1 RF	•	•	★
R1	Class 150 ring type joint (RTJ) ASME B16.5	•	•	
R3	Class 300 RTJ ASME B16.5	•	•	
R6	Class 600 RTJ ASME B16.5	•	•	
R9(1)	Class 900 RTJ ASME B16.5	•	•	
RF(1)	Class 1500 RTJ ASME B16.5	•	•	
RT(1)	Class 2500 RTJ ASME B16.5	•	•	

(1) *Available in remote mount applications only.*

Opposite side support or packing gland

Code	Description			
0	No opposite side support or packing gland (1)			★
Opposite side support (2)				
C	NPT threaded opposite support assembly			★
D	Welded opposite support assembly			★
Packing gland (3)				
	Packing gland material	**Rod material**	**Packing material**	
J(4)	Stainless steel (SST) packing gland/cage nipple	Carbon steel	PTFE	
K(4)	Stainless steel packing gland/cage nipple	Stainless steel	PTFE	
L(4)	Stainless steel packing gland/cage nipple	Carbon steel	Graphite	
N(4)	Stainless steel packing gland/cage nipple	Stainless steel	Graphite	

Code	Description			
R	Alloy C-276 packing gland/cage nipple	Stainless steel	Graphite	

(1) *Required for Pak-Lok and Flange-Lok models.*
(2) *Required for flanged models.*
(3) *Required for Flo-Tap models.*
(4) *The cage nipple is constructed of 304 SST.*

Isolation valve for Flo-Tap models

Code	Description	Measurement type		
		D	1-7	
0[1]	Not applicable or customer supplied	•	•	★
1	Gate valve, carbon steel	•	•	
2	Gate valve, stainless steel	•	•	
5	Ball valve, carbon steel	•	•	
6	Ball valve, stainless steel	•	•	

(1) *For customer-supplied mounting or isolation valve, provide relevant dimension at time of sizing and order.*

Temperature measurement

Code	Description	Measurement type		
		D	1-7	
T[1]	Integral RTD [2]	•	•	★
0	No temperature sensor	•	•	★
R[1]	Remote thermowell and RTD	•	•	

(1) *A temperature sensor is required for* ***Measurement type*** *1, 3, 5, and 7. If the temperature sensor will be customer-supplied, contact an Emerson representative for assistance.*
(2) *Not available with flanged model greater than Class 600.*

Transmitter connection platform

Code	Description	Measurement type		
		D	1-7	
3	Direct mount, integral 3-valve manifold [1]	•	•	★
5	Direct mount, 5-valve manifold [1]	•	•	★
6	Direct mount, high temperature 5-valve manifold [1]	•	•	
7	Remote mount NPT connections (½ in. female NPT [FNPT])	•	•	★
8	Remote mount SW connections (½ in.)	•	•	

(1) *Not available with flanged model greater than Class 600.*

Differential pressure range

Code	Description	Measurement type		
		D	1–7	
1	0 to 25 inH_2O (0 to 62.16 mbar)	•	•	★
2	0 to 250 inH_2O (0 to 621.6 mbar)	•	•	★
3	0 to 1,000 inH_2O (0 to 2.49 bar)	•	•	★

Static pressure range

Code	Description	Measurement type		
		D	1–7	
A[1]	None	•	•	★
D	Absolute (0 to 800 psia [0 to 55.16 bar])	—	•	★
E[2]	Absolute (0 to 3,626 psia [0 to 250 bar])	—	•	★
J	Gauge (–14.2 to 800 psig [–0.98 to 55.16 bar])	—	•	★
K[2]	Gauge (–14.2 to 3,626 psig [–0.98 to 250 bar])	—	•	★

(1) *Required for **Measurement type** codes 3, 4, 7, and D.*
(2) *For **Measurement type** codes 1, 2, 5, and 6 with **Differential pressure range** 1, absolute limits are 0.5 to 2,000 psi (0.03 to 137.9 bar), and gauge limits are –14.2 to 2,000 psig (–0.98 to 137.9 bar).*

Transmitter output

Code	Description	Measurement type		
		D	1-7	
A	4–20 mA with digital signal based on HART® protocol	•	•	★
F[1]	FOUNDATION™ Fieldbus protocol [2]	•	•	★
X[3][4]	Wireless [5]	•	•	★

(1) ***Transmitter output** code F is only available with **Measurement type** codes 1, 2, 5, 6, and D.*
(2) *Requires Plantweb™ housing.*
(3) *Only intrinsically safe approval codes apply.*
(4) *Only available with **Measurement type** D and 6.*
(5) *Requires wireless options and wireless Plantweb housing.*

Transmitter housing style

Code	Description	Material	Conduit entry size	Measurement type		
				D	1–7	
00	None[1]	N/A	N/A	•	—	★
1A	Plantweb™ housing	Aluminum	½—14 NPT	•	•	★
1B	Plantweb housing	Aluminum	M20 x 1.5	•	•	★
1J	Plantweb housing	Stainless steel (SST)	½—14 NPT	•	•	★
1K	Plantweb housing	SST	M20 x 1.5	•	•	★
2E	Junction box housing with output for remote display and interface	Aluminum	½—14 NPT	•	—	★
2F	Junction box housing with output for remote display and interface	Aluminum	M20 x 1.5	•	—	★
2M	Junction box housing with output for remote display and interface	SST	½—14 NPT	•	—	★
5A[2]	Wireless Plantweb housing	Aluminum	½—14 NPT	•	•	★
5J[2]	Wireless Plantweb housing	SST	½—14 NPT	•	•	★
1C	Plantweb housing	Aluminum	G½	•	•	
1L	Plantweb housing	SST	G½	•	•	
2G	Junction box housing with output for remote display and interface	Aluminum	G½	•	—	

(1) *Customer-supplied electrical connection.*

(2) *Only available with **Transmitter output** code X.*

Performance class

For detailed specifications, see Specifications.

Code	Description	Measurement type		
		D	1-7	
Measurement types 1, 2, 5, and 6				
3(1)	Ultra for Flow: 0.8 % flow rate accuracy, 14:1 flow turndown, 15-year stability, 15-year limited warranty	•	•	★
5	Classic MultiVariable™: 1.15% flow rate accuracy, 8:1 flow turndown, 15-year stability	—	•	★
Measurement types 3, 4, 7, and D				
1	Ultra: up to 0.95 % flow rate accuracy, 8:1 flow turndown, 15-year stability, 15-year limited warranty	•	—	★
2	Classic: up to 1.4 % flow rate accuracy, 8:1 flow turndown, 15-year stability	•	—	★
3(1)	Ultra for Flow: 0.8 % flow rate accuracy, 14:1 flow turndown, 15-year stability, 15-year limited warranty	•	•	★

(1) *Only available with **Differential pressure range** 2 and 3 and silicone fill fluid.*

Wireless options

Update rate, operating frequency, and protocol

Code	Description	Measurement type		
		D	1–7	
WA3	User-configurable update rate, 2.4 GHz direct-sequence spread spectrum (DSSS), IEC 62591 (*Wireless*HART®)	•	•	★

Omni-directional wireless antenna and SmartPower™

Long-life power module must be shipped separately; order Power Module 701PBKKF.

Code	Description	Measurement type		
		D	1–7	
WJ1	Remote antenna, adapter for Black Power Module (Intrinsically Safe [IS] power module sold separately)	•	—	★
WK1	External antenna, adapter for Black Power Module (IS power module sold separately)	•	•	★
WM1	Extended range, external antenna, adapter for Black Power Module (IS power module sold separately)	•	•	★
WN1	High-gain, remote antenna, adapter for Black Power Module (IS power module sold separately)	•	•	

Additional options

HART® revision configuration (requires HART protocol output code A)

Option HR7 configures the HART output to HART Revision 7. This option requires the selection of the **Advanced Diagnostics** (DA2) option. If desired, you can field configure a device with this option to HART Revision 5 or 7.

Code	Description	Measurement type		
		D	1–7	
HR7	Configured for HART Revision 7	•	—	★

Extended product warranty

Code	Description	Measurement type		
		D	1–7	
WR3	3-year limited warranty	•	•	★
WR5	5-year limited warranty	•	•	★

Pressure testing

Code	Description	Measurement type		
		D	1-7	
P1	Hydrostatic testing with certificate	•	•	
PX	Extended hydrostatic testing	•	•	

Special cleaning

Code	Description	Measurement type		
		D	1-7	
P2	Cleaning for special processes	•	•	

Material testing

Code	Description	Measurement type		
		D	1-7	
V1	Dye penetrant exam	•	•	

Material examination

Code	Description	Measurement type		
		D	1-7	
V2	Radiographic examination	•	•	

Flow calibration

Code	Description	Measurement type		
		D	1-7	
W1	Flow calibration (average K)	•	•	

Special inspection

Code	Description	Measurement type		
		D	1–7	
QC1	Visual and dimensional inspection with certificate	•	•	★
QC7	Inspection and performance certificate	•	•	★

Surface finish

This surface finish option is auto-selected by the sizing tool as necessary.

Code	Description	Measurement type		
		D	1-7	
RL	Surface finish for low pipe Reynolds number in gas and steam	•	•	★
RH	Surface finish for high pipe Reynolds number in liquid	•	•	★

Material traceability certification

Instrument connections for remote mount options and isolation valves for Flo-Tap models are not included in the material traceability certification.

Code	Description	Measurement type		
		D	1-7	
Q8	Material traceability certificate per EN 10204: 2004 3.1	•	•	★

Positive material identification (PMI)

For pressure retaining parts only. Isolation and instrument valves are not included.

Code	Description	Measurement type		
		D	1-7	
Q76	PMI verification and certificate	•	•	★

Code conformance

Code	Description	Measurement type		
		D	1-7	
J2	American National Standards Institute (ANSI)/American Society of Mechanical Engineers (ASME) B31.1	•	•	
J3	ANSI/ASME B31.3	•	•	
J5[(1)(2)]	Certificate of Compliance to NACE® MR0175/International Organization for Standardization (ISO) 15156 for wetted materials	•	•	
J6	European Pressure Directive (PED)	•	•	★

Code	Description	Measurement type		
		D	1-7	
J1	Canadian Registration	•	•	
J8	Chinese Certificate of Special Equipment Type Test	•	•	

(1) *Materials of construction comply with metallurgical requirements within NACE MR0175/ISO 15156 for sour oil field production environments. Environmental limits apply to certain materials. Consult latest standard for details. Selected materials also conform to NACE MR0103 for sour refining environments.*
(2) *Selecting J5 option will provide alloy C-276 transmitter diaphragms.*

Installed in flanged pipe spool section

Refer to Rosemount 485 specifications for spool section lengths and schedules.

Code	Description	Measurement type		
		D	1-7	
H3	Class 150 flanged connection with Rosemount standard length and schedule	•	•	
H4	Class 300 flanged connection with Rosemount standard length and schedule	•	•	
H5	Class 600 flanged connection with Rosemount standard length and schedule	•	•	

Instrument connections for remote mount option

Code	Description	Measurement type		
		D	1-7	
G2	Needle valves, stainless steel	•	•	★
G6	OS and Y gate valves, stainless steel	•	•	★
G1	Needle valves, carbon steel	•	•	
G3	Needle valves, alloy C-276	•	•	
G5	OS and Y gate valves, carbon steel	•	•	
G7	OS and Y gate valves, alloy C-276	•	•	

Special shipment

Requires 486 model to be ordered. Include Y1 option on 486 model also.

Code	Description	Measurement type		
		D	1-7	
Y1	Mounting hardware (1)	•	•	★

(1) *Shipped separately.*

Special dimensions

Code	Description	Measurement type		
		D	1-7	
VM	Variable mounting	•	•	

Transmitter calibration certification

Code	Description	Measurement type		
		D	1–7	
Q4	Calibration certificate for transmitter	•	•	★
QP	Calibration certificate and tamper evident seal	•	•	★

Quality certification for safety

For **Option** code A: 4–20 mA HART® only.

Code	Description	Measurement type		
		D	1–7	
QT	Safety-certified to IEC 61508 with certificate of failure modes, effects, and diagnostic analysis (FMEDA) data	•	—	★

Product certifications

Code	Description	Measurement type		
		D	1-7	
E1	ATEX Flameproof	•	•	★
I1	ATEX Intrinsic Safety	•	•	★
IA(1)	ATEX FISCO Intrinsic Safety	•	•	★
N1	ATEX Type n	•	•	★
ND	ATEX Dust	•	•	★
K1	ATEX Flameproof, Intrinsic Safety, Type n, Dust (combination of E1, I1, N1, and ND)	•	•	★
I2	Brazil Intrinsic Safety	•	•	★
K2	Brazil Flameproof, Intrinsic Safety	•	•	★
E4	Japan Flameproof	•	•	★
E5	USA Explosion-proof, Dust Ignition-proof	•	•	★
I5	USA Intrinsically Safe; Nonincendive	•	•	★
IE(1)	USA FISCO Intrinsic Safety	•	•	★
K5	USA Explosion-proof, Dust Ignition-proof, Intrinsically Safe, Division 2 (combination of E5 and I5)	•	•	★
E6(2)	Canada Explosion-proof, Dust Ignition-proof, Division 2	•	•	★
I6	Canada Intrinsically Safe	•	•	★
IF(1)	Canada FISCO Intrinsic Safety	•	•	★
K6(2)	Canada Explosion-proof, Dust Ignition-proof, Intrinsically Safe, Division 2 (combination of E6 and I6)	•	•	★
E7	IECEx Flameproof, Dust Ignition-proof	•	•	★
I7	IECEx Intrinsic Safety	•	•	★
IG(1)	IECEx FISCO Intrinsic Safety	•	•	★
N7	IECEx Type n	•	•	★
K7	IECEx Flameproof, Dust Ignition-proof, Intrinsic Safety, Type n (combination of E7, I7, and N7)	•	•	★

Code	Description	Measurement type		
		D	1-7	
E3	China Flameproof	•	•	★
I3	China Intrinsic Safety	•	•	★
EP	Republic of Korea Flameproof	•	•	★
IP	Republic of Korea Intrinsic Safety	•	•	★
KP	Republic of Korea Flameproof, Intrinsic Safety	•	•	★
KA[2]	ATEX and Canada Flameproof, Intrinsically Safe, Division 2 (combination of E1, I1, E6, and I6)	•	•	★
KB[2]	USA and Canada Explosion-proof, Dust Ignition-proof, Intrinsically Safe, Division 2 (combination of E5, E6, I5, and I6)	•	•	★
EM	Technical Regulations Customs Union (EAC) Flameproof	•	•	★
IM	Technical Regulations Customs Union (EAC) Intrinsic Safety	•	•	★
KM	Technical Regulations Customs Union (EAC) Flameproof, Intrinsic Safety	•	•	★
E2	Brazil Flameproof	•	•	★
KC	USA and ATEX Explosion-proof, Intrinsically Safe, Division 2 (combination of E5, E1, I5, and I1)	•	•	★
KD[2]	USA, Canada, and ATEX Explosion-proof, Intrinsically Safe (combination of E5, I5, E6, I6, E1, and I1)	•	•	★

(1) *FISCO is only available with **Transmitter output** code F.*
(2) *Not available with M20 or G½ conduit entry size.*

Shipboard approvals

Code	Description	Measurement type		
		D	1–7	
SBS	American Bureau of Shipping	•	•	★
SBV	Bureau Veritas (BV) Type Approval	•	•	★
SDN	Det Norske Veritas (DNV) Type Approval	•	•	★
SLL	Lloyd's Register (LR) Type Approval	•	•	★

Sensor fill fluid and O-ring options

Code	Description	Measurement type		
		D	1–7	
L1	Inert sensor fill fluid	•	•	★
L2	Graphite-filled (PTFE) O-ring	•	•	★
LA	Inert sensor fill fluid and graphite-filled (PTFE) O-ring	•	•	★

Digital display

Code	Description	Measurement type		
		D	1-7	
M5	Plantweb™ LCD display [1]	•	•	★
M7[2][3][4]	Remote mount LCD display and interface, Plantweb housing, no cable; stainless steel (SST) bracket	•	—	★

Code	Description	Measurement type		
		D	1-7	
M8[2][3]	Remote mount LCD display and interface, Plantweb housing, 50 ft. (15 m) cable; SST bracket	•	—	★
M9[2][3]	Remote mount LCD display and interface, Plantweb housing, 100 ft. (31 m) cable; SST bracket	•	—	★

(1) *Requires Plantweb housing.*
(2) *Not available with **Transmitter output** code X. Only available with **Measurement type** D.*
(3) *Not available with **Transmitter output** code F, **Option** code DA2, or **Option** code QT.*
(4) *See Rosemount 3051S Series Scalable Pressure, Flow, and Level Solution with HART® Protocol Reference Manual for cable requirements. Contact an Emerson representative for additional information.*

Transient protection

Code	Description	Measurement type		
		D	1–7	
T1	Transient terminal block[1]	•	•	★

(1) *This is not available with **Housing** code 00, 5A, or 5J. External ground screw assembly (option code D4) is included with the T1 option. The T1 option is not needed with FISCO product certifications.*

Manifold for remote mount option

Code	Description	Measurement type		
		D	1-7	
F2	3-valve manifold, stainless steel	•	•	★
F6	5-valve manifold, stainless steel	•	•	★
F3	3-valve manifold, alloy C-276	•	•	
F7	5-valve manifold, alloy C-276	•	•	

Plantweb™ control functionality

Code	Description	Measurement type		
		D	1–7	
A01	FOUNDATION™ Fieldbus advanced control function block suite	•	•	★

Plantweb™ diagnostics functionality

Code	Description	Measurement type		
		D	1–7	
D01	FOUNDATION™ Fieldbus diagnostics suite (**Process Intelligence**, **Plugged Impulse Line Diagnostic**)	•	—	★
DA2[1]	Advanced HART® diagnostic suite, which consists of the following: ■ **Process Intelligence** ■ **Loop Integrity** ■ **Plugged Impulse Line Diagnostic** ■ **Process Alerts** ■ **Service Alerts** ■ **Variable Log** ■ **Event Log**	•	—	★

(1) *Includes hardware adjustments (option code D1) as standard. Not available with **Transmitter output** code X or F. Only available with **Measurement type** D.*

Plantweb™ enhanced measurement functionality

Requires Rosemount Engineering Assistant to configure. To ensure correct operation, review Rosemount Engineering Assistant 6 Software, and then download the Engineering Assistant software.

Code	Description	Measurement type		
		D	1–7	
H01	FOUNDATION™ Fieldbus fully compensated mass flow block	•	—	★

Cold temperature

Code	Description	Measurement type		
		D	1-7	
BRR	–58 °F (–50 °C) cold temperature start-up	—	•	★
BR6	–76 °F (–60 °C) cold temperature operation	•	—	★

Alarm limit

Not available with **Transmitter output** code F or X.

Code	Description	Measurement type		
		D	1–7	
C4	NAMUR alarm and saturation levels, High alarm	•	•	★
C5	NAMUR alarm and saturation levels, Low alarm	•	•	★
C6	Custom alarm and saturation levels, High alarm (requires C1 and Configuration Data Sheet)	•	•	★
C7	Custom alarm and saturation levels, Low alarm (requires C1 and Configuration Data Sheet)	•	•	★
C8	Low alarm (standard Rosemount alarm and saturation levels)	•	•	★

Hardware adjustments and ground screw

Code	Description	Measurement type		
		D	1-7	
D1[1][2][3]	Hardware adjustments (**Zero**, **Span**, **Alarm**, **Security**)	•	—	★
D4[4]	External ground screw assembly	•	•	★
DA[1][2]	Hardware adjustments (**Zero**, **Span**, **Alarm**, **Security**) and external ground screw assembly	•	•	★

(1) *Not available with **Transmitter output** code X. Only available with **Measurement type** D.*
(2) *Not available with **Transmitter output** code F.*
(3) *Not available with **Housing** codes 2E, 2F, 2G, 2M, 5A, or 5J.*
(4) *This assembly is included with options E1, E2, E3, E4, E7, EM, EP, K1, K2, K6, K7, KA, KC, KD, KP, KM, N1, N3, N7, ND, and T1.*

Conduit plug

Code	Description	Measurement type		
		D	1–7	
DO	316 stainless steel (SST) conduit plug	•	•	★

Conduit electrical connector

This is not available with **Housing** code 5A or 5J.

Available with intrinsically safe (IS) approvals only. For FM intrinsically Safe, Nonincendive (option code I5) or FM FISCO Intrinsically Safe (option code IE), install in accordance with Rosemount drawing *03151-1009*.

Code	Description	Measurement type		
		D	1-7	
GE	M12, 4-pin, male connector (eurofast®)	•	•	
GM	A size mini, 4-pin, male connector (minifast®)	•	•	

Rosemount 3051SFC Compact Flow Meter



- Compact conditioning flow meters reduce straight piping requirements to 2D upstream and 2D downstream from most flow disturbances.
- Simple installation of compact flow meters between any existing raised-face flanges.
- Typical 3051SFC model code: 3051SFC 1 C S 060 N 065 T 3 2 J A 1A 3

For additional technical data and ordering information for Rosemount Annubar™ Primary Elements, refer to the Rosemount DP Flow meters and Primary Elements Product Data Sheet.

CONFIGURE > VIEW PRODUCT >

• = Available
— = Unavailable

Required model components

Model

Code	Description	Measurement type		
		D	1–7	
3051SFC	Compact flow meter	•	•	

Measurement type

Code	Description	Measurement type		
		D	1–7	
1	Fully compensated mass and energy flow calculations – differential and static pressures with temperature	—	•	★
2	Compensated flow calculations – differential and static pressures	—	•	★
3	Compensated flow calculations – differential pressure and temperature	—	•	★
4	Compensated flow calculations – differential pressure	—	•	★
5	Process variables only (no flow calculations) – differential and static pressures with temperature	—	•	★
6	Process variables only (no flow calculations) – differential and static pressures	—	•	★
7	Process variables only (no flow calculations) – differential pressure and temperature	—	•	★
D	Differential pressure	•	—	★

Primary element technology

Code	Description	Measurement type		
		D	1–7	
C	Conditioning orifice plate	•	•	★
P	Orifice plate	•	•	★

Material type

Code	Description	Measurement type		
		D	1–7	
S	316 stainless steel (SST)	•	•	★

Line size

Code	Description	Measurement type		
		D	1–7	
005(1)	½ in. (15 mm)	•	•	★
010(1)	1 in. (25 mm)	•	•	★
015(1)	1½ in. (40 mm)	•	•	★
020	2 in. (50 mm)	•	•	★
030	3 in. (80 mm)	•	•	★
040	4 in. (100 mm)	•	•	★
060	6 in. (150 mm)	•	•	★
080	8 in. (200 mm)	•	•	★
100(2)	10 in. (250 mm)	•	•	★
120(2)	12 in. (300 mm)	•	•	★

(1) *Available with **Primary element technology** P code only.*
(2) *For the 10 in. (250 mm) and 12 in. (300 mm) line sizes, the alignment ring must be ordered (Installation Accessories).*

Primary element type

Code	Description	Measurement type		
		D	1–7	
N040	0.40 Beta ratio (β)	•	•	★
N050	0.50 Beta ratio (β)	•	•	★
N065(1)	0.65 Beta ratio (β)	•	•	★

(1) *For 2 in. (50 mm) line size, the beta ratio is 0.60 for **Primary element technology** code C.*

Temperature measurement

Code	Description	Measurement type		
		D	1–7	
T(1)	Integral RTD	—	•	★
0	No temperature sensor	•	•	★
R(1)	Remote thermowell and RTD	•	•	

(1) *A temperature sensor is required for **Measurement type** 1, 3, 5, and 7. If the temperature sensor will be customer-supplied, contact an Emerson representative for assistance.*

Transmitter connection platform

Code	Description	Measurement type		
		D	1–7	
3	Direct-mount, integral 3-valve manifold	•	•	★
7	Remote-mount, NPT connections	•	•	★

Differential pressure range

Code	Description	Measurement type		
		D	1–7	
1	0 to 25 inH_2O (0 to 62.16 mbar)	•	•	★
2	0 to 250 inH_2O (0 to 621.6 mbar)	•	•	★
3	0 to 1,000 inH_2O (0 to 2.49 bar)	•	•	★

Static pressure range

Code	Description	Measurement type		
		D	1–7	
A(1)	None	•	•	★
D	Absolute (0 to 800 psia [0 to 55.16 bar])	—	•	★
E(2)	Absolute (0 to 3,626 psia [0 to 250 bar])	—	•	★
J	Gauge (–14.2 to 800 psig [–0.98 to 55.16 bar])	—	•	★
K(2)	Gauge (–14.2 to 3,626 psig [–0.98 to 250 bar])	—	•	★

(1) *Required for **Measurement type** codes 3, 4, 7, and D.*
(2) *For **Measurement type** codes 1, 2, 5, and 6 with **Differential pressure range** 1, absolute limits are 0.5 to 2,000 psi (0.03 to 137.9 bar), and gauge limits are –14.2 to 2,000 psig (–0.98 to 137.9 bar).*

Transmitter output

Code	Description	Measurement type		
		D	1–7	
A	4–20 mA with digital signal based on HART® protocol	•	•	★
F(1)(2)	FOUNDATION™ Fieldbus protocol	•	•	★
X(3)(4)	Wireless	•	—	★

(1) *Requires Plantweb™ housing.*
(2) ***Transmitter output** code F is only available with **Measurement type** codes 1, 2, 5, 6, and D.*
(3) *Only intrinsically safe approval codes apply.*
(4) *Only available with **Measurement type** codes D and 6.*

Transmitter housing style

Code	Description	Material	Conduit entry size	Measurement type		
				D	1–7	
00	None(1)	N/A	N/A	•	—	★
1A	Plantweb™ housing	Aluminum	½—14 NPT	•	•	★
1B	Plantweb housing	Aluminum	M20 x 1.5	•	•	★

Code	Description	Material	Conduit entry size	Measurement type		
				D	1–7	
1J	Plantweb housing	Stainless steel (SST)	½—14 NPT	•	•	★
1K	Plantweb housing	SST	M20 x 1.5	•	•	★
2E	Junction box housing with output for remote display and interface	Aluminum	½—14 NPT	•	—	★
2F	Junction box housing with output for remote display and interface	Aluminum	M20 x 1.5	•	—	★
2M	Junction box housing with output for remote display and interface	SST	½—14 NPT	•	—	★
5A(2)	Wireless Plantweb housing	Aluminum	½—14 NPT	•	•	★
5J(2)	Wireless Plantweb housing	SST	½—14 NPT	•	•	★
1C	Plantweb housing	Aluminum	G½	•	•	
1L	Plantweb housing	SST	G½	•	•	
2G	Junction box housing with output for remote display and interface	Aluminum	G½	•	—	

(1) *Customer-supplied electrical connection.*
(2) *Only available with* ***Transmitter output*** *code X.*

Performance class

Code	Description	Measurement type		
		D	1–7	
Measurement types 1, 2, 5, and 6				
3(1)	Ultra for Flow: 0.75 % flow rate accuracy, 14:1 flow turndown, 15-year stability, 15-year limited warranty	•	•	★
5	Classic MultiVariable™: 1.10 % flow rate accuracy, 8:1 flow turndown, 15-year stability	—	•	★
Measurement types 3, 4, 7, and D				
1	Ultra: up to 0.90 % flow rate accuracy, 8:1 flow turndown, 15-year stability, 15-year limited warranty	•	—	★
2	Classic: up to 1.40 % flow rate accuracy, 8:1 flow turndown, 15-year stability	•	—	★
3(1)	Ultra for Flow: 0.75 % flow rate accuracy, 14:1 flow turndown, 15-year stability, 15-year limited warranty	•	•	★

(1) *Only available with* ***Differential pressure range*** *2 and 3 and silicone fill fluid.*

Wireless options

Update rate, operating frequency, and protocol

Code	Description	Measurement type		
		D	1–7	
WA3	User-configurable update rate, 2.4 GHz direct-sequence spread spectrum (DSSS), IEC 62591 (*Wireless*HART®)	•	•	★

Omni-directional wireless antenna and SmartPower™

Long-life power module must be shipped separately; order Power Module 701PBKKF.

Code	Description	Measurement type		
		D	1–7	
WJ1	Remote antenna, adapter for Black Power Module (Intrinsically Safe [IS] power module sold separately)	•	—	★
WK1	External antenna, adapter for Black Power Module (IS power module sold separately)	•	•	★
WM1	Extended range, external antenna, adapter for Black Power Module (IS power module sold separately)	•	•	★
WN1	High-gain, remote antenna, adapter for Black Power Module (IS power module sold separately)	•	•	

Additional options

HART® revision configuration (requires HART protocol output code A)

Option HR7 configures the HART output to HART Revision 7. This option requires the selection of the **Advanced Diagnostics** (DA2) option. If desired, you can field configure a device with this option to HART Revision 5 or 7.

Code	Description	Measurement type		
		D	1–7	
HR7	Configured for HART Revision 7	•	—	★

Extended product warranty

Code	Description	Measurement type		
		D	1–7	
WR3	3-year limited warranty	•	•	★
WR5	5-year limited warranty	•	•	★

Installation accessories

Code	Description	Measurement type		
		D	1–7	
A(1)	ANSI alignment ring (Class 150)	•	•	★
C(1)	ANSI alignment ring (Class 300)	•	•	★
D(1)	ANSI alignment ring (Class 600)	•	•	★
G	DIN alignment ring (PN 16)	•	•	★
H	DIN alignment ring (PN 40)	•	•	★
J	DIN alignment ring (PN 100)	•	•	★
B	JIS alignment ring (10K)(2)	•	•	
R	JIS alignment ring (20K)	•	•	
S	JIS alignment ring (40K)	•	•	

(1) *Only required for 10 in. (250 mm) and 12 in. (300 mm) line sizes.*
(2) *Not available on 12 in. (300 mm) line size.*

Remote adapters

Code	Description	Measurement type		
		D	1–7	
E	Flange adapters 316 stainless steel (SST) (½ in. NPT)	•	•	★

High temperature applications

Code	Description	Measurement type		
		D	1–7	
T	Graphite valve packing (T_{max} = 850 °F [454 °C])	•	•	

Flow calibration

Code	Description	Measurement type		
		D	1–7	
WC(1)	Flow calibration, 3-point conditioning orifice option C	•	•	
WD(2)	Flow calibration, 10-point conditioning orifice option C	•	•	

(1) *Available with **Primary element technology** code C only.*
(2) *Consult factory for pipe schedules other than schedule 40.*

Pressure testing

Code	Description	Measurement type		
		D	1–7	
P1	Hydrostatic testing with certificate	•	•	★

Special cleaning

Code	Description	Measurement type		
		D	1–7	
P2	Cleaning for special processes	•	•	

Special inspection

Code	Description	Measurement type		
		D	1–7	
QC1	Visual and dimensional inspection with certificate	•	•	★
QC7	Inspection and performance certificate	•	•	★

Transmitter calibration certification

Code	Description	Measurement type		
		D	1–7	
Q4	Calibration certificate for transmitter	•	•	★
QP	Calibration certificate and tamper evident seal	•	•	★

Quality certification for safety

For **Option** code A: 4–20 mA HART® only.

Code	Description	Measurement type		
		D	1–7	
QT	Safety-certified to IEC 61508 with certificate of failure modes, effects, and diagnostic analysis (FMEDA) data	•	—	★

Material traceability certification

Code	Description	Measurement type		
		D	1–7	
Q8	Material traceability certificate per EN 10204: 2004 3.1	•	•	★

Positive material identification (PMI)

Code	Description	Measurement type		
		D	1–7	
Q76	PMI verification and certificate	•	•	★

Code conformance

Code	Description	Measurement type		
		D	1–7	
J2	American National Standards Institute (ANSI)/American Society of Mechanical Engineers (ASME) B31.1	•	•	
J3	ANSI/ASME B31.3	•	•	
J5(1)(2)	Certificate of Compliance to NACE® MR0175/International Organization for Standardization (ISO) 15156 for wetted materials	•	•	

(1) *Materials of construction comply with metallurgical requirements within NACE MR0175/ISO 15156 for sour oil field production environments. Environmental limits apply to certain materials. Consult latest standard for details. Selected materials also conform to NACE MR0103 for sour refining environments.*

(2) *Selecting J5 option will provide alloy C-276 transmitter diaphragms.*

Country certification

Code	Description	Measurement type		
		D	1–7	
J1	Canadian Registration	•	•	
J8	Chinese Certificate of Special Equipment Type Test	•	•	

Product certifications

Code	Description	Measurement type		
		D	1–7	
E1	ATEX Flameproof	•	•	★
I1	ATEX Intrinsic Safety	•	•	★

Code	Description	Measurement type		
		D	1–7	
IA[1]	ATEX FISCO Intrinsic Safety	•	•	★
N1	ATEX Type n	•	•	★
ND	ATEX Dust	•	•	★
K1	ATEX Flameproof, Intrinsic Safety, Type n, Dust (combination of E1, I1, N1, and ND)	•	•	★
I2	Brazil Intrinsic Safety	•	•	★
K2	Brazil Flameproof, Intrinsic Safety	•	•	★
IB	Brazil FISCO Intrinsic Safety	•	•	★
E4	Japan Flameproof	•	•	★
E5	USA Explosion-proof, Dust Ignition-proof	•	•	★
I5	USA Intrinsically Safe; Non-incendive	•	•	★
IE[1]	USA FISCO Intrinsic Safety	•	•	★
K5	USA Explosion-proof, Dust Ignition-proof, Intrinsically Safe, Division 2 (combination of E5 and I5)	•	•	★
E6[2]	Canada Explosion-proof, Dust Ignition-proof, Division 2	•	•	★
I6	Canada Intrinsically Safe	•	•	★
IF[1]	Canada FISCO Intrinsic Safety	•	•	★
K6[2]	Canada Explosion-proof, Dust Ignition-proof, Intrinsically Safe, Division 2 (combination of E6 and I6)	•	•	★
E7	IECEx Flameproof, Dust Ignition-proof	•	•	★
I7	IECEx Intrinsic Safety	•	•	★
IG[1]	IECEx FISCO Intrinsic Safety	•	•	★
K7	IECEx Flameproof, Dust Ignition-proof, Intrinsic Safety, Type n (combination of E7, I7, and N7)	•	•	★
E3	China Flameproof	•	•	★
I3	China Intrinsic Safety	•	•	★
EP	Republic of Korea Flameproof	•	•	★
IP	Republic of Korea Intrinsic Safety	•	•	★
KP	Republic of Korea Flameproof, Intrinsic Safety	•	•	★
KA[2]	ATEX and Canada Flameproof, Intrinsically Safe, Division 2 (combination of E1, I1, E6, and I6)	•	•	★
KB[2]	USA and Canada Explosion-proof, Dust Ignition-proof, Intrinsically Safe, Division 2 (combination of E5, E6, I5, and I6)	•	•	★
EM	Technical Regulations Customs Union (EAC) Flameproof	•	•	★
IM	Technical Regulations Customs Union (EAC) Intrinsic Safety	•	•	★
KM	Technical Regulations Customs Union (EAC) Flameproof, Intrinsic Safety	•	•	★
E2	Brazil Flameproof	•	•	★
KC	USA and ATEX Explosion-proof, Intrinsically Safe, Division 2 (combination of E5, E1, I5, and I1)	•	•	★
KD[2]	USA, Canada, and ATEX Explosion-proof, Intrinsically Safe (combination of E5, I5, E6, I6, E1, and I1)	•	•	★
KL	USA, Canada, IECEx, ATEX Intrinsic Safety Combination	•	•	★
KS	USA, Canada, IECEx, ATEX Explosion Proof, Intrinsically Safe, Dust, Non-incendive, Type N, Div. 2	•	•	★

(1) *FISCO is only available with **Transmitter output** code F.*
(2) *Not available with M20 or G½ conduit entry size.*

Shipboard approvals

Code	Description	Measurement type		
		D	1–7	
SBS	American Bureau of Shipping	•	•	★
SBV	Bureau Veritas (BV) Type Approval	•	•	★
SDN	Det Norske Veritas (DNV) Type Approval	•	•	★
SLL	Lloyd's Register (LR) Type Approval	•	•	★

Sensor fill fluid and O-ring options

Code	Description	Measurement type		
		D	1–7	
L1	Inert sensor fill fluid	•	•	★
L2	Graphite-filled (PTFE) O-ring	•	•	★
LA	Inert sensor fill fluid and graphite-filled (PTFE) O-ring	•	•	★

Digital display

Code	Description	Measurement type		
		D	1–7	
M5	Plantweb™ LCD display (requires Plantweb housing)	•	•	★
M7(1)(2)(3)	Remote-mount LCD display and interface, Plantweb housing, no cable; SST bracket	•	—	★
M8(1)(2)	Remote-mount LCD display and interface, Plantweb housing, 50 ft. (15 m) cable; SST bracket	•	—	★
M9(1)(2)	Remote-mount LCD display and interface, Plantweb housing, 100 ft. (31 m) cable; SST bracket	•	—	★

(1) *Not available with **Transmitter output** code X. Only available with **Measurement type** D.*
(2) *Not available with transmitter output code F, option code DA2, or option code QT.*
(3) *See the Rosemount 3051S Reference Manual for cable requirements. Contact an Emerson representative for additional information.*

Transient protection

Code	Description	Measurement type		
		D	1–7	
T1	Transient terminal block(1)	•	•	★

(1) *This is not available with **Housing** code 00, 5A, or 5J. External ground screw assembly (option code D4) is included with the T1 option. The T1 option is not needed with FISCO product certifications.*

Manifold for remote-mount option

Code	Description	Measurement type		
		D	1–7	
F2	3-valve manifold, stainless steel (SST)	•	•	★
F6	5-valve manifold, SST	•	•	★

Plantweb™ control functionality

Code	Description	Measurement type		
		D	1–7	
A01	FOUNDATION™ Fieldbus advanced control function block suite	•	•	★

Plantweb™ diagnostics functionality

Code	Description	Measurement type		
		D	1–7	
D01	FOUNDATION™ Fieldbus diagnostics suite (**Process Intelligence**, **Plugged Impulse Line Diagnostic**)	•	—	★
DA2(1)	Advanced HART® diagnostic suite, which consists of the following: ■ **Process Intelligence** ■ **Loop Integrity** ■ **Plugged Impulse Line Diagnostic** ■ **Process Alerts** ■ **Service Alerts** ■ **Variable Log** ■ **Event Log**	•	—	★

(1) *Includes hardware adjustments (option code D1) as standard. Not available with **Transmitter output** code X or F. Only available with **Measurement type** D.*

Plantweb™ enhanced measurement functionality

Requires Rosemount Engineering Assistant to configure. To ensure correct operation, review Rosemount Engineering Assistant 6 Software, and then download the Engineering Assistant software.

Code	Description	Measurement type		
		D	1–7	
H01	FOUNDATION™ Fieldbus fully compensated mass flow block	•	—	★

Cold temperature

Code	Description	Measurement type		
		D	1–7	
BRR	–58 °F (–50 °C) cold temperature start-up	—	•	★
BR6	–76 °F (–60 °C) cold temperature operation	•	—	★

Alarm limit

Not available with **Transmitter output** code F or X.

Code	Description	Measurement type		
		D	1–7	
C4	NAMUR alarm and saturation levels, High alarm	•	•	★
C5	NAMUR alarm and saturation levels, Low alarm	•	•	★
C6	Custom alarm and saturation levels, High alarm (requires C1 and Configuration Data Sheet)	•	•	★

Code	Description	Measurement type		
		D	1–7	
C7	Custom alarm and saturation levels, Low alarm (requires C1 and Configuration Data Sheet)	•	•	★
C8	Low alarm (standard Rosemount alarm and saturation levels)	•	•	★

Hardware adjustments and ground screw

Code	Description	Measurement type		
		D	1–7	
D1[1][2][3]	Hardware adjustments (zero, span, alarm, security)	•	—	★
D4[4]	External ground screw assembly	•	•	★
DA[1][2]#unique_184/unique_184_Connect_42_HAGS03	Hardware adjustments (zero, span, alarm, security) and external ground screw assembly	•	—	★

(1) *Not available with **Output** code X. Only available with **Measurement type** D.*
(2) *Not available with **Output protocol** code F.*
(3) *Not available with housing codes 2E, 2F, 2G, 2M, 5A, or 5J.*
(4) *This assembly is included with options EP, KP, E1, N1, K1, ND, E4, E7, K7, E3, KA, KC, KD, IA, T1, EM, and KM.*

Conduit plug

Code	Description	Measurement type		
		D	1–7	
DO	316 stainless steel (SST) conduit plug	•	•	★

Conduit electrical connector

Not available with **Housing** code 5A or 5J.

Available with Intrinsically Safe approvals only. For FM Intrinsically Safe; Nonincendive (option code I5) or FM FISCO Intrinsically Safe (option code IE), install in accordance with Rosemount drawing *03151-1009*.

Code	Description	Measurement type		
		D	1–7	
ZE	M12, 4-pin, male connector (eurofast®)	•	•	★
ZM	A size mini, 4-pin, male connector (minifast®)	•	•	★

Rosemount 3051SFP Integral Orifice Flow Meter



- Precision honed pipe section for increased accuracy in small line sizes.
- Self-centering plate design prevents alignment errors that magnify measurement inaccuracies in small line sizes.
- Typical 3051SFP model code: 3051SFP 1 F 010 W3 S 0150 D3 1 J A 1A 3 M5

For additional technical data and ordering information for Rosemount Annubar Primary Elements, refer to the Rosemount DP Flow meters and Primary Elements Product Data Sheet.

VIEW PRODUCT >

• = Available
— = Unavailable

Required model components

Model

Code	Description	Measurement type		
		D	1-7	
3051SFP	Integral Orifice Flow Meter	•	•	★

Measurement type

Code	Description	Measurement type		
		D	1–7	
1	Fully compensated mass and energy flow calculations – differential and static pressures with temperature	—	•	★
2	Compensated flow calculations – differential and static pressures	—	•	★
3	Compensated flow calculations – differential pressure and temperature	—	•	★
4	Compensated flow calculations – differential pressure	—	•	★
5	Process variables only (no flow calculations) – differential and static pressures with temperature	—	•	★
6	Process variables only (no flow calculations) – differential and static pressures	—	•	★
7	Process variables only (no flow calculations) – differential pressure and temperature	—	•	★
D	Differential pressure	•	—	★

Material type and body

Code	Description	Measurement type		
		D	1-7	
F	316 stainless steel (SST), enhanced support body	•	•	★

Line size

Code	Description	Measurement type		
		D	1-7	
005	½ in. (15 mm)	•	•	★
010	1 in. (25 mm)	•	•	★
015	1½ in. (40 mm)	•	•	★

Process connection

Code	Description	Measurement type		
		D	1-7	
T1	NPT female body (not available with thermowell and RTD)	•	•	★
S1(1)	Socket weld body (not available with thermowell and RTD)	•	•	★
P1	Pipe ends: NPT threaded	•	•	★
P2	Pipe ends: beveled	•	•	★
D1	Pipe ends: flanged, PN16 EN-1092-1 RF, slip-on	•	•	★
D2	Pipe ends: flanged, PN40 EN-1092-1 RF, slip-on	•	•	★
D3	Pipe ends: flanged, PN100 EN-1092-1 RF, slip-on	•	•	★
W1	Pipe ends: flanged, Class 150 RF American Society of Mechanical Engineers (ASME) B16.5, weld-neck	•	•	★
W3	Pipe ends: flanged, Class 300 RF ASME B16.5, weld-neck	•	•	★
W6	Pipe ends: flanged, Class 600 RF ASME B16.5, weld-neck	•	•	★
W9	Pipe ends: flanged, Class 900 RF ASME B16.5, weld-neck	•	•	★
A1	Pipe ends: flanged, Class 150 RF ASME B16.5, slip-on	•	•	
A3	Pipe ends: flanged, Class 300 RF ASME B16.5, slip-on	•	•	
A6	Pipe ends: flanged, Class 600 RF ASME B16.5, slip-on	•	•	
R1	Pipe ends: flanged, Class 150 ring type joint (RTJ) ASME B16.5, slip-on	•	•	
R3	Pipe ends: flanged, Class 300 RTJ ASME B16.5, slip-on	•	•	
R6	Pipe ends: flanged, Class 600 RTJ ASME B16.5, slip-on	•	•	
R9	Pipe ends: flanged, Class 900 RTJ ASME B16.5, weld-neck	•	•	

(1) *To improve pipe perpendicularity for gasket sealing, socket diameter is smaller than standard pipe outer dimension (OD).*

Orifice plate material

Code	Description	Measurement type		
		D	1-7	
S	316/316L stainless steel (SST)	•	•	★
H	Alloy C-276	•	•	
M	Alloy 400	•	—	

Bore size option

Code	Description	Measurement type		
		D	1-7	
0066	0.066 in. (1.7 mm) for ½-in. pipe	•	•	★
0109	0.109 in. (2.8 mm) for ½-in. pipe	•	•	★
0160	0.16 in. (4.1 mm) for ½-in. pipe	•	•	★
0196	0.196 in. (5 mm) for ½-in. pipe	•	•	★
0260	0.26 in. (6.6 mm) for ½-in. pipe	•	•	★
0340	0.34 in. (8.6 mm) for ½-in. pipe	•	•	★
0150	0.15 in. (3.8 mm) for 1-in. pipe	•	•	★
0250	0.25 in. (6.4 mm) for 1-in. pipe	•	•	★
0345	0.345 in. (8.8 mm) for 1-in. pipe	•	•	★
0500	0.5 in. (12.7 mm) for 1-in. pipe	•	•	★
0630	0.63 in. (16 mm) for 1-in. pipe	•	•	★
0800	0.8 in. (20.3 mm) for 1-in. pipe	•	•	★
0295	0.295 in. (7.5 mm) for 1½-in. pipe	•	•	★
0376	0.376 in. (9.6 mm) for 1½-in. pipe	•	•	★
0512	0.512 in. (13 mm) for 1½-in. pipe	•	•	★
0748	0.748 in. (19 mm) for 1½-in. pipe	•	•	★
1022	1.022 in. (26 mm) for 1½-in. pipe	•	•	★
1184	1.184 in. (30.1 mm) for 1½ in. pipe	•	•	★
0010	0.01 in. (0.3 mm) for ½-in. pipe	•	•	
0014	0.014 in. (0.4 mm) for ½-in. pipe	•	•	
0020	0.02 in. (0.5 mm) for ½-in. pipe	•	•	
0034	0.034 in. (0.9 mm) for ½-in. pipe	•	•	
XXXX	Special bore size (X.XXX in.)	•	•	

Transmitter connection platform

Code	Description	Measurement type		
		D	1-7	
D3	Direct mount, 3-valve manifold, stainless steel (SST)	•	•	★
D5	Direct mount, 5-valve manifold, SST	•	•	★
R3	Remote mount, 3-valve manifold, SST	•	•	★
R5	Remote mount, 5-valve manifold, SST	•	•	★
D4[(1)]	Direct mount, 3-valve manifold, alloy C-276	•	•	
D6[(1)]	Direct mount, 5-valve manifold, alloy C-276	•	•	
R4	Remote mount, 3-valve manifold, alloy C-276	•	•	
R6	Remote mount, 5-valve manifold, alloy C-276	•	•	

(1) *Changes the transmitter orientation of the assembly. Please refer to the D4, D6 option for C-276 manifold assembly in the product drawing.*

Differential pressure range

Code	Description	Measurement type		
		D	1–7	
1	0 to 25 inH_2O (0 to 62.16 mbar)	•	•	★
2	0 to 250 inH_2O (0 to 621.6 mbar)	•	•	★
3	0 to 1,000 inH_2O (0 to 2.49 bar)	•	•	★

Static pressure range

Code	Description	Measurement type		
		D	1–7	
A(1)	None	•	•	★
D	Absolute (0 to 800 psia [0 to 55.16 bar])	—	•	★
E(2)	Absolute (0 to 3,626 psia [0 to 250 bar])	—	•	★
J	Gauge (–14.2 to 800 psig [–0.98 to 55.16 bar])	—	•	★
K(2)	Gauge (–14.2 to 3,626 psig [–0.98 to 250 bar])	—	•	★

(1) *Required for **Measurement type** codes 3, 4, 7, and D.*
(2) *For **Measurement type** codes 1, 2, 5, and 6 with **Differential pressure range** 1, absolute limits are 0.5 to 2,000 psi (0.03 to 137.9 bar), and gauge limits are –14.2 to 2,000 psig (–0.98 to 137.9 bar).*

Transmitter output

Code	Description	Measurement type		
		D	1-7	
A	4–20 mA with digital signal based on HART® protocol	•	•	★
F(1)	FOUNDATION™ Fieldbus protocol (2)	•	•	★
X(3)(4)	Wireless (5)	•	•	★

(1) ***Transmitter output** code F is only available with **Measurement type** codes 1, 2, 5, 6, and D.*
(2) *Requires Plantweb™ housing.*
(3) *Only intrinsically safe approval codes apply.*
(4) *Only available with **Measurement type** D and 6.*
(5) *Requires wireless options and wireless Plantweb housing.*

Transmitter housing style

Code	Description	Material	Conduit entry size	Measurement type		
				D	1–7	
00	None(1)	N/A	N/A	•	—	★
1A	Plantweb™ housing	Aluminum	½—14 NPT	•	•	★
1B	Plantweb housing	Aluminum	M20 x 1.5	•	•	★
1J	Plantweb housing	Stainless steel (SST)	½—14 NPT	•	•	★
1K	Plantweb housing	SST	M20 x 1.5	•	•	★
2E	Junction box housing with output for remote display and interface	Aluminum	½—14 NPT	•	—	★
2F	Junction box housing with output for remote display and interface	Aluminum	M20 x 1.5	•	—	★

Code	Description	Material	Conduit entry size	Measurement type		
				D	1–7	
2M	Junction box housing with output for remote display and interface	SST	½—14 NPT	•	—	★
5A[2]	Wireless Plantweb housing	Aluminum	½—14 NPT	•	•	★
5J[2]	Wireless Plantweb housing	SST	½—14 NPT	•	•	★
1C	Plantweb housing	Aluminum	G½	•	•	
1L	Plantweb housing	SST	G½	•	•	
2G	Junction box housing with output for remote display and interface	Aluminum	G½	•	—	

(1) *Customer-supplied electrical connection.*
(2) *Only available with* ***Transmitter output*** *code X.*

Performance class

Code	Description	Measurement type		
		D	1-7	
Measurement types 1, 2, 5, and 6				
3[1]	Ultra for Flow: 0.95 % flow rate accuracy, 14:1 flow turndown, 15-year stability, 15-year limited warranty	•	•	★
5	Classic MultiVariable™ (MV): 1.25 % flow rate accuracy, 8:1 flow turndown, 15-year stability	—	•	★
Measurement types 3, 4, 7, and D				
1	Ultra: up to 1.05 % flow rate accuracy, 8:1 flow turndown, 15-year stability, 15-year limited warranty	•	—	★
2	Classic: up to 1.5 % flow rate accuracy, 8:1 flow turndown, 15-year stability	•	—	★
3[1]	Ultra for Flow: 0.95 % flow rate accuracy, 14:1 flow turndown, 15-year stability, 15-year limited warranty	•	•	★

(1) *Only available with* ***Differential pressure range*** *2 and 3, and silicone fill fluid.*

Wireless options

Update rate, operating frequency, and protocol

Code	Description	Measurement type		
		D	1–7	
WA3	User-configurable update rate, 2.4 GHz direct-sequence spread spectrum (DSSS), IEC 62591 (*Wireless*HART®)	•	•	★

Omni-directional wireless antenna and SmartPower™

Long-life power module must be shipped separately; order Power Module 701PBKKF.

Code	Description	Measurement type		
		D	1–7	
WJ1	Remote antenna, adapter for Black Power Module (Intrinsically Safe [IS] power module sold separately)	•	—	★
WK1	External antenna, adapter for Black Power Module (IS power module sold separately)	•	•	★

Code	Description	Measurement type		
		D	1–7	
WM1	Extended range, external antenna, adapter for Black Power Module (IS power module sold separately)	•	•	★
WN1	High-gain, remote antenna, adapter for Black Power Module (IS power module sold separately)	•	•	

Additional options

HART® revision configuration (requires HART protocol output code A)

Option HR7 configures the HART output to HART Revision 7. This option requires the selection of the **Advanced Diagnostics** (DA2) option. If desired, you can field configure a device with this option to HART Revision 5 or 7.

Code	Description	Measurement type		
		D	1–7	
HR7	Configured for HART Revision 7	•	—	★

Extended product warranty

Code	Description	Measurement type		
		D	1–7	
WR3	3-year limited warranty	•	•	★
WR5	5-year limited warranty	•	•	★

Transmitter/body bolt material

Code	Description	Measurement type		
		D	1-7	
G	High temperature option (850 °F [454 °C])	•	•	

Temperature sensor

Thermowell material is the same as the body material.

Code	Description	Measurement type		
		D	1-7	
T	Thermowell and RTD	•	•	★

Optional connection

Code	Description	Measurement type		
		D	1-7	
G1	DIN 19213 transmitter connection	•	•	★

Pressure testing

Code	Description	Measurement type		
		D	1-7	
P1	Hydrostatic testing with certificate(1)	•	•	

(1) *Does not apply to **Process connection** code T1 and S1. Option P1 may not be ordered in combination with P2.*

Special cleaning

Code	Description	Measurement type		
		D	1-7	
P2	Cleaning for special processes	•	•	

Material testing

Code	Description	Measurement type		
		D	1-7	
V1	Dye penetrant exam	•	•	

Material examination

Code	Description	Measurement type		
		D	1-7	
V2	Radiographic examination (1)	•	•	

(1) *Available only with **Process connection** code W1, W3, and W6.*

Flow calibration

Code	Description	Measurement type		
		D	1-7	
WD	Discharge coefficient verification(1)	•	•	

(1) *This is not available for **Bore size** 0010, 0014, 0020, 0034, 0066, or 0109. This option does not apply to **Process connection** codes T1 and S1.*

Special inspection

Code	Description	Measurement type		
		D	1–7	
QC1	Visual and dimensional inspection with certificate	•	•	★
QC7	Inspection and performance certificate	•	•	★

Material traceability certification

Code	Description	Measurement type		
		D	1–7	
Q8	Material traceability certificate per EN 10204: 2004 3.1	•	•	★

Positive material identification (PMI)

Code	Description	Measurement type		
		D	1–7	
Q76	PMI verification and certificate	•	•	★

Code conformance

Not available with DIN **Process connection** codes D1, D2, or D3.

Code	Description	Measurement type		
		D	1-7	
J2[1]	American National Standards Institute (ANSI)/American Society of Mechanical Engineers (ASME) B31.1	•	•	
J3[1]	ANSI/ASME B31.3	•	•	

(1) *Changes the transmitter orientation of the assembly. For more information, refer to the J2 and J3 options for B31 compliant assembly in the product drawing.*

Material conformance

Materials of construction comply with metallurgical requirements within NACE® MR0175/International Organization for Standardization (ISO) 15156 for sour oil field production environments. Environmental limits apply to certain materials. Consult latest standard for details. Selected materials also conform to NACE MR0103 for sour refining environments.

Selecting J5 option will provide Alloy C-276 transmitter diaphragms.

Code	Description	Measurement type		
		D	1-7	
J5	Certificate of Compliance to NACE MR0175/ISO 15156 for wetted materials	•	•	

Country certification

Code	Description	Measurement type		
		D	1-7	
J6	European Pressure Directive (PED)	•	•	★
J1	Canadian Registration	•	•	

Transmitter calibration certification

Code	Description	Measurement type		
		D	1-7	
Q4	Calibration certificate for transmitter	•	•	★

Quality certification for safety

For **Option** code A: 4–20 mA HART® only.

Code	Description	Measurement type		
		D	1–7	
QT	Safety-certified to IEC 61508 with certificate of failure modes, effects, and diagnostic analysis (FMEDA) data	•	—	★

Product certifications

Code	Description	Measurement type		
		D	1-7	
E1	ATEX Flameproof	•	•	★
I1	ATEX Intrinsic Safety	•	•	★
IA[1]	ATEX FISCO Intrinsic Safety	•	•	★
N1	ATEX Type n	•	•	★
ND	ATEX Dust	•	•	★
K1	ATEX Flameproof, Intrinsic Safety, Type n, Dust (combination of E1, I1, N1, and ND)	•	•	★
I2	Brazil Intrinsic Safety	•	•	★
K2	Brazil Flameproof, Intrinsic Safety	•	•	★
E4	Japan Flameproof	•	•	★
E5	USA Explosion-proof, Dust Ignition-proof	•	•	★
I5	USA Intrinsically Safe; Nonincendive	•	•	★
IE[1]	USA FISCO Intrinsic Safety	•	•	★
K5	USA Explosion-proof, Dust Ignition-proof, Intrinsically Safe, Division 2 (combination of E5 and I5)	•	•	★
E6[2]	Canada Explosion-proof, Dust Ignition-proof, Division 2	•	•	★
I6	Canada Intrinsically Safe	•	•	★
IF[1]	Canada FISCO Intrinsic Safety	•	•	★
K6[2]	Canada Explosion-proof, Dust Ignition-proof, Intrinsically Safe, Division 2 (combination of E6 and I6)	•	•	★
E7	IECEx Flameproof, Dust Ignition-proof	•	•	★
I7	IECEx Intrinsic Safety	•	•	★
IG[1]	IECEx FISCO Intrinsic Safety	•	•	★
N7	IECEx Type n	•	•	★
K7	IECEx Flameproof, Dust Ignition-proof, Intrinsic Safety, Type n (combination of E7, I7, and N7)	•	•	★
E3	China Flameproof	•	•	★
I3	China Intrinsic Safety	•	•	★
EP	Republic of Korea Flameproof	•	•	★
IP	Republic of Korea Intrinsic Safety	•	•	★
KP	Republic of Korea Flameproof, Intrinsic Safety	•	•	★
KA[2]	ATEX and Canada Flameproof, Intrinsically Safe, Division 2 (combination of E1, I1, E6, and I6)	•	•	★
KB[2]	USA and Canada Explosion-proof, Dust Ignition-proof, Intrinsically Safe, Division 2 (combination of E5, E6, I5, and I6)	•	•	★
EM	Technical Regulations Customs Union (EAC) Flameproof	•	•	★
IM	Technical Regulations Customs Union (EAC) Intrinsic Safety	•	•	★
KM	Technical Regulations Customs Union (EAC) Flameproof, Intrinsic Safety	•	•	★
E2	Brazil Flameproof	•	•	★
KC	USA and ATEX Explosion-proof, Intrinsically Safe, Division 2 (combination of E5, E1, I5, and I1)	•	•	★

Code	Description	Measurement type		
		D	1-7	
KD[2]	USA, Canada, and ATEX Explosion-proof, Intrinsically Safe (combination of E5, I5, E6, I6, E1, and I1)	•	•	★

(1) *FISCO is only available with **Transmitter output** code F.*
(2) *Not available with M20 or G½ conduit entry size.*

Shipboard approvals

Code	Description	Measurement type		
		D	1–7	
SBS	American Bureau of Shipping	•	•	★
SBV	Bureau Veritas (BV) Type Approval	•	•	★
SDN	Det Norske Veritas (DNV) Type Approval	•	•	★
SLL	Lloyd's Register (LR) Type Approval	•	•	★

Sensor fill fluid and O-ring options

Code	Description	Measurement type		
		D	1–7	
L1	Inert sensor fill fluid	•	•	★
L2	Graphite-filled (PTFE) O-ring	•	•	★
LA	Inert sensor fill fluid and graphite-filled (PTFE) O-ring	•	•	★

Digital display

Code	Description	Measurement type		
		D	1-7	
M5	Plantweb™ LCD display [1]	•	•	★
M7[2][3][4]	Remote mount LCD display and interface, Plantweb housing, no cable, stainless steel (SST) bracket	•	—	★
M8[3][4]	Remote mount LCD display and interface, Plantweb housing, 50 ft. (15 m) cable, SST bracket	•	—	★
M9[3][4]	Remote mount LCD display and interface, Plantweb housing, 100 ft. (31 m) cable, SST bracket	•	—	★

(1) *Requires Plantweb housing.*
(2) *See the Rosemount 3051S Series Scalable Pressure, Flow, and Level Solution Reference Manual for cable requirements. Contact an Emerson representative for additional information.*
(3) *Not available with **Output** code F, **Option** code DA2, or **Option** code QT.*
(4) *Not available with **Output** code X.*

Transient protection

This is not available with **Housing** code 00, 5A, or 5J.

External ground screw assembly (option code D4) is included with the T1 option. The T1 option is not needed with FISCO product certifications.

Code	Description	Measurement type		
		D	1-7	
T1	Transient terminal block	•	•	★
T2	Terminal block with WAGO spring clamp terminals	•	•	★
T3	Transient terminal block with WAGO spring clamp terminals	•	•	★

Plantweb™ control functionality

Code	Description	Measurement type		
		D	1–7	
A01	FOUNDATION™ Fieldbus advanced control function block suite	•	•	★

Plantweb™ diagnostics functionality

Code	Description	Measurement type		
		D	1–7	
D01	FOUNDATION™ Fieldbus diagnostics suite (**Process Intelligence**, **Plugged Impulse Line Diagnostic**)	•	—	★
DA2(1)	Advanced HART® diagnostic suite, which consists of the following: ■ **Process Intelligence** ■ **Loop Integrity** ■ **Plugged Impulse Line Diagnostic** ■ **Process Alerts** ■ **Service Alerts** ■ **Variable Log** ■ **Event Log**	•	—	★

(1) *Includes hardware adjustments (option code D1) as standard. Not available with **Transmitter output** code X or F. Only available with **Measurement type** D.*

Plantweb™ enhanced measurement functionality

Requires Rosemount Engineering Assistant to configure. To ensure correct operation, review Rosemount Engineering Assistant 6 Software, and then download the Engineering Assistant software.

Code	Description	Measurement type		
		D	1–7	
H01	FOUNDATION™ Fieldbus fully compensated mass flow block	•	—	★

Cold temperature

Code	Description	Measurement type		
		D	1-7	
BRR	–58 °F (–50 °C) cold temperature start-up	—	•	★
BR6	–76 °F (–60 °C) cold temperature operation	•	—	★

Alarm limit

Not available with **Transmitter output** codes F or X.

Code	Description	Measurement type		
		D	1-7	
C4	NAMUR alarm and saturation levels, High alarm	•	—	★
C5	NAMUR alarm and saturation levels, Low alarm	•	—	★
C6	Custom alarm and saturation levels, High alarm (requires C1 and Rosemount 3051S Wireless Configuration Data Sheet)	•	—	★
C7	Custom alarm and saturation levels, Low alarm (requires C1 and Rosemount 3051S Wireless Configuration Data Sheet)	•	—	★
C8	Low alarm (standard Rosemount alarm and saturation levels)	•	—	★

Hardware adjustments and ground screw

Code	Description	Measurement type		
		D	1-7	
D1[1][2][3]	Hardware adjustments (**Zero**, **Span**, **Alarm**, **Security**)	•	—	★
D4[4]	External ground screw assembly	•	•	★
DA[1][2]	Hardware adjustments (**Zero**, **Span**, **Alarm**, **Security**) and external ground screw assembly	•	•	★

(1) *Not available with **Transmitter output** code X. Only available with **Measurement type** D.*
(2) *Not available with **Transmitter output** code F.*
(3) *Not available with **Housing** codes 2E, 2F, 2G, 2M, 5A, or 5J.*
(4) *This assembly is included with options E1, E2, E3, E4, E7, EM, EP, K1, K2, K6, K7, KA, KC, KD, KP, KM, N1, N3, N7, ND, and T1.*

Conduit plug

Code	Description	Measurement type		
		D	1–7	
DO	316 stainless steel (SST) conduit plug	•	•	★

Conduit electrical connector

This is not available with **Housing** code 5A or 5J.

Available with intrinsically safe (IS) approvals only. For FM intrinsically Safe, Nonincendive (option code I5) or FM FISCO Intrinsically Safe (option code IE), install in accordance with Rosemount drawing *03151-1009*.

Code	Description	Measurement type		
		D	1-7	
GE	M12, 4-pin, male connector (eurofast®)	•	•	
GM	A size mini, 4-pin, male connector (minifast®)	•	•	

Rosemount 3051S Electronic Remote Sensor (ERS™) System



The 3051S ERS System is a flexible, 2-wire, 4-20 mA HART® architecture that calculates differential pressure (DP) electronically using two pressure sensors that are linked together with a non-proprietary electrical wire.

Ideal applications for the Rosemount 3051S ERS System include tall vessels and distillation columns that have traditionally required long lengths of capillary or impulse piping. When used in these types of applications, the 3051S ERS System can deliver:

- More accurate and repeatable DP measurements
- Faster time response
- Simplified installations
- Reduced maintenance

VIEW PRODUCT >

Online product configurator

Many products are configurable online using our product configurator.

Select the **Configure** button or visit Emerson.com/global to start. With this tool's built-in logic and continuous validation, you can configure your products more quickly and accurately.

Specifications and options

The purchaser of the equipment must specify and select:

- Product materials
- Options
- Components

Sizing and selection

Use the Differential Pressure (DP) Level Sizing & Selection Tool to size Rosemount DP Level meters to meet your application-specific requirements.

The Sizing & Selection tool:

1. Verifies if a selected product meets your application requirements.
2. Provide a comparison between different system types.
3. Generates a detailed accuracy comparison graph.

Once a sizing is completed, the configuration tool will help create a complete and valid model code to match your requirements and include any additional options or approvals.

Optimizing lead time

The starred offerings (★) represent the most common options and should be selected for the fastest delivery. The non-starred offerings are subject to additional delivery lead time.

How to order

Procedure

1. Choose two Rosemount 3051S ERS™ Transmitter models.
   These may be any combination of 3051SAM and 3051SAL models.

   Figure 1: 3051SAM



   A. Coplanar™
   B. In-line

   Figure 2: 3051SAL

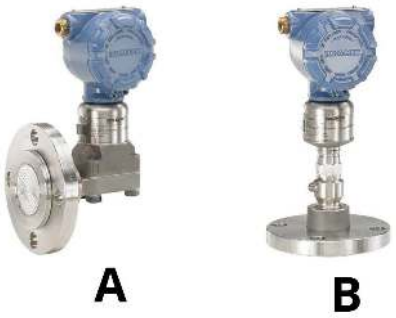

   A. Coplanar
   B. In-line

2. Decide which model will be the ERS Primary (4-20 mA loop termination and optional LCD display) and which will be the ERS Secondary. Use the **Configuration type** code on each model number to specify this.



   A. Secondary
   B. Primary

3. Specify two full model numbers per the desired configuration.

   Example

   3051SAM1ST2A2E11A2A

   3051SAL1PG4AA1A1020DFF71DA00M5

Rosemount 3051SAM Transmitter for ERS™ Applications



- Coplanar™ and in-line sensor module platforms
- Variety of process connections including threaded NPT, flanges, manifolds, and Rosemount remote seals
- Available with 15-year stability and 15-year limited warranty

Required model components

Model

Code	Description
3051SAM	Scalable™ ERS™ Measurement Transmitter

Performance class

The Rosemount 3051S ERS™ System offers three performance class options; Classic, Ultra, and Enhanced ERS System Performance. The Classic and Ultra performance classes are suited to lower static pressure and stable temperature conditions. The Enhanced ERS System Performance class provides better performance across temperature (–40 to +185 °F [–40 to +85 °C]) with improved performance at higher static pressure.

Code	Description	
1	Ultra: 0.025 % span accuracy, 200:1 rangedown, 15-year stability, 15-year limited warranty	★
2	Classic: 0.035 % span accuracy, 150:1 rangedown, 15-year stability	★
4	Enhanced ERS System Performance, 15-year stability, 15-year limited warranty	★

Configuration type

Code	Description	
P	ERS™ - primary	★
S	ERS - secondary	★

Pressure type

Code	Description		
	Module	**Sensor**	
G	Coplanar™	Gauge	★
T	In-line	Gauge	★
E	In-line	Absolute	★
A	Coplanar	Absolute	

Pressure range

Specify the pressure range based on the maximum static pressure, not differential pressure.

Code	Description				
	Coplanar™ gauge	**In-line gauge**	**In-line absolute**	**Coplanar absolute**	
1A	N/A	–14.7 to 30 psig (–1.01 to 2.06 bar)	0 to 30 psia (0 to 2.06 bar)	0 to 30 psia (0 to 2.06 bar)	★
2A	–250 to 250 inH_2O (–621.6 to 621.6 mbar)	–14.7 to 150 psig (–1.01 to 10.34 bar)	0 to 150 psia (0 to 10.34 bar)	0 to 150 psia (0 to 10.34 bar)	★
3A	–393 to 1,000 inH_2O (–0.97 to 2.48 bar)	–14.7 to 800 psig (–1.01 to 55.15 bar)	0 to 800 psia (0 to 55.15 bar)	0 to 800 psia (0 to 55.15 bar)	★
4A	–14.2 to 300 psig (–0.97 to 20.68 bar)	–14.7 to 4,000 psig (–1.01 to 275.79 bar)	0 to 4,000 psia (0 to 275.79 bar)	0 to 4,000 psia (0 to 275.79 bar)	★
5A	–14.2 to 2,000 psig (–0.97 to 137.89 bar)	–14.7 to 10,000 psig (–1.01 to 689.47 bar)	0 to 10,000 psia (0 to 689.47 bar)	N/A	★

Isolating diaphragm

Code	Description	
2(1)	316L stainless steel (SST)	★
3(1)	Alloy C-276	★
4(1)(2)	Alloy 400	
5(2)(3)	Tantalum	
6(1)(2)	Gold-plated Alloy 400 (includes graphite-filled PTFE O-Ring)	
7(1)(2)	Gold-plated 316L SST	

(1) *Materials of construction comply with metallurgical requirements highlighted within NACE® MR 0175/International Organization for Standardization (ISO) 15156 for sour oil field production environments. Environmental limits apply to certain materials. Consult latest standard for details. Selected materials also conform to NACE MR 0103 for sour refining environments. Order with Q15 or Q25 to receive a NACE certificate.*

(2) *Not available with **Pressure sensor/Module** codes T or E.*

(3) *Tantalum diaphragm material is only available with **Pressure sensor/Module** code G.*

Process connection

Code	Description		
	Coplanar™ module type	**In-line module type**	
A11(1)	Assemble to Rosemount 305 Manifold	Assemble to Rosemount 306 Manifold	★

Code	Description		
	Coplanar™ module type	**In-line module type**	
A12[1]	Assemble to Rosemount 304 or AMF Manifold with stainless steel (SST) traditional flange	Assemble AMF Manifold to ½-14 NPT female process connection	★
A15[1]	Assemble to 304 or AMF manifold to SST traditional flange with alloy C-276 drain vents	N/A	★
A22[1]	Assemble to 304 or AMF manifold to SST Coplanar flange	N/A	★
B11[1][2]	Assemble to one Rosemount Remote Diaphragm Seal with SST transmitter flange	Assemble to one Rosemount Remote Diaphragm	★
E11	Coplanar flange (carbon steel [CS]), ¼–18 NPT, 316 SST drain vents	½ –14 NPT female	★
E12	Coplanar flange (SST), ¼–18 NPT, 316 SST drain vents	N/A	★
E13[3]	Coplanar flange (cast C-276), ¼–18 NPT, alloy C-276 drain vents	N/A	★
E14	Coplanar flange (alloy 400), ¼–18 NPT, alloy 400/K-500 drain vents	N/A	★
E15[3]	Coplanar flange (SST), ¼–18 NPT, alloy C-276 drain vents	N/A	★
E16[3]	Coplanar flange (CS), ¼–18 NPT, alloy C-276 drain vents	N/A	★
E21	Coplanar flange (CS), RC ¼, 316 SST drain vents	N/A	★
E22	Coplanar flange (SST), RC ¼, 316 SST drain vents	N/A	★
E23[3]	Coplanar flange (cast C-276), RC ¼, alloy C-276 drain vents	N/A	★
E25[3]	Coplanar flange (SST), RC ¼, alloy C-276 drain vents	N/A	★
E26[3]	Coplanar flange (CS), RC ¼, alloy C-276 drain vents	N/A	★
F12	Traditional flange (SST), ¼–18 NPT, 316 SST drain vents	N/A	★
F13[3]	Traditional flange (cast C-276), ¼–18 NPT, alloy C-276 drain vents	N/A	★
F14	Traditional flange (cast alloy 400), ¼–18 NPT, alloy 400/ K-500 drain vents	N/A	★
F15[3]	Traditional flange (SST), ¼–18 NPT, alloy C-276 drain vents	N/A	★
F22	Traditional flange (SST), RC ¼, 316 SST drain vents	N/A	★
F23[3]	Traditional flange (cast C-276), RC ¼, alloy C-276 drain vents	N/A	★
F24	Traditional flange (cast alloy 400), RC ¼, alloy 400/K500 drain vents	N/A	★
F25	Traditional flange (SST), RC ¼, alloy C-276 drain vents	N/A	★
F52	DIN-compliant traditional flange (SST), ¼–18 NPT, 316 drain vents, 7 to 16-in. bolting	N/A	★
G11	Vertical mount level flange (SST), 2-in. American Society of Mechanical Engineers (ASME) Class 150, 316 SST drain vents	G½ A DIN 16288 male (range 1–4 only)	★
G12	Vertical mount level flange (SST), 2-in. ASME Class 300, 316 SST drain vents	N/A	★
G21	Vertical mount level flange (SST), 3-in. ASME Class 150, 316 SST drain vents	N/A	★

Code	Description		
	Coplanar™ module type	**In-line module type**	
G22	Vertical mount level flange (SST), 3-in. ASME Class 300, 316 SST drain vents	N/A	★
G31	Vertical mount level flange (SST), DIN-DN 50 PN 40, 316 SST drain vents	N/A	★
G41	Vertical mount level flange (SST), DIN-DN 80 PN 40, 316 SST drain vents	N/A	★
P11	N/A	Level flange (SST), 2-in. ASME Class 150	★
P12	N/A	Level flange (SST), 2-in. ASME Class 300	★
P21	N/A	Level flange (SST), 3-in. ASME Class 150	★
P22	N/A	Level flange (SST), 3-in. ASME Class 300	★
P31	N/A	Level flange (SST), DIN-DN 50 PN 40	★
F11	Traditional flange (CS), ¼–18 NPT, 316 SST drain vents	Non-threaded instrument flange (I-Flange)	
F32	Bottom vent traditional flange (SST), ¼–18 NPT, 316 SST drain vents	N/A	
F42	Bottom vent traditional flange (SST), RC ¼, 316 SST drain vents	N/A	
F62	DIN-compliant traditional flange (316 SST), ¼–18 NPT, 316 drain vents, M10 bolting	N/A	
F72	DIN-compliant traditional flange (316 SST), ¼–18 NPT, 316 drain vents, M12 bolting	N/A	

(1) *"Assemble to" items are specified separately and require a completed model number.*
(2) *Consult an Emerson representative for performance specifications.*
(3) *Materials of construction comply with metallurgical requirements highlighted within NACE® MR 0175/International Organization for Standardization (ISO) 15156 for sour oil field production environments. Environmental limits apply to certain materials. Consult latest standard for details. Selected materials also conform to NACE MR 0103 for sour refining environments. Order with Q15 or Q25 to receive a NACE certificate.*

Transmitter output

Code	Description	
A	4–20 mA with digital signal based on HART® protocol	★

Housing style

Code	Description	Material	Conduit entry size	
Housings for ERS™ primary - Configuration type code P				
1A	Plantweb™ housing	Aluminum	½–14 NPT	★
1B	Plantweb housing	Aluminum	M20 x 1.5 (CM 20)	★
1J	Plantweb housing	Stainless steel (SST)	½–14 NPT	★
1K	Plantweb housing	SST	M20 x 1.5 (CM 20)	★
2E	Junction box with remote display output	Aluminum	½–14 NPT	★
2F	Junction box with remote display output	Aluminum	M20 x 1.5 (CM 20)	★
2M	Junction box with remote display output	SST	½–14 NPT	★
1C	Plantweb housing	Aluminum	G½	

Code	Description	Material	Conduit entry size	
Housings for ERS™ primary - Configuration type code P				
1L	Plantweb housing	SST	G½	
2G	Junction box with remote display output	Aluminum	G½	
Housings for ERS secondary - Configuration type code S				
2A	Junction box	Aluminum	½–14 NPT	★
2B	Junction box	Aluminum	M20 x 1.5 (CM 20)	★
2J	Junction box	SST	½–14 NPT	★
2C	Junction box	Aluminum	G½	

Additional options

Extended product warranty

Code	Description	
WR3	3-year limited warranty	★
WR5	5-year limited warranty	★

ERS™ connection cable

Code	Description	
R02	25 ft. (7.62 m) of ERS cable (gray color)	
R05	50 ft. (15.2 m) of ERS cable (gray color)	★
R10	100 ft. (30.5 m) of ERS cable (gray color)	★
R15	150 ft. (45.72 m) of ERS cable (gray color)	★
R20(1)	200 ft. (60.96 m) of ERS cable (gray color)	
R22(2)	225 ft. (68.58 m) of ERS cable (gray color)	
R30	300 ft. (91.44 m) of ERS cable (gray color)	
R40	400 ft. (121.92 m) of ERS cable (gray color)	
R50	500 ft. (152.4 m) of ERS cable (gray color)	
H02	25 ft. (7.62 m) of ERS cable (blue color)	
H05	50 ft. (15.2 m) of ERS cable (blue color)	
H10	100 ft. (30.5 m) of ERS cable (blue color)	
H15	150 ft. (45.7 m) of ERS cable (blue color)	
H20(1)	200 ft. (60.96 m) of ERS cable (blue color)	
H22(2)	225 ft. (68.58 m) of ERS cable (blue color)	
J02	25 ft. (7.62 m) of ERS armored cable	
J05	50 ft. (15.2 m) of ERS armored cable	
J07	75 ft. (22.8 m) of ERS armored cable	
J10	100 ft. (30.5 m) of ERS armored cable	

Code	Description	
J12[2]	125 ft. (38.1 m) of ERS armored cable	

(1) *Maximum cable distance for Safety Instrumented Systems (SIS) installations. See Rosemount 3051S Electronic Remote Sensor (ERS) System Reference Manual for more information.*
(2) *Maximum cable distance for IS (intrinsically safe) installations. Other options may not be valid at longer distances.*

Mounting bracket

Code	Description	
B1[1]	Traditional flange bracket, carbon steel (CS), 2-inch pipe	★
B2[1]	Traditional flange bracket, CS, panel	★
B3[1]	Traditional flange flat bracket, CS, 2-inch pipe	★
B4	Bracket, all stainless steel (SST), 2-inch pipe and panel	★
B7[1]	Traditional flange bracket, B1 with SST bolts	★
B8[1]	Traditional flange bracket, B2 with SST bolts	★
B9[1]	Traditional flange bracket, B3 with SST bolts	★
BA[1]	Traditional flange bracket, B1, all SST	★
BC[1]	Traditional flange bracket, B3, all SST	★

(1) *Not available with **Pressure sensor/Module** codes T or E.*

Special configuration (software)

Code	Description	
C1[1]	Customer software configuration (*Configuration Data Sheet* must be completed)	★
C3	Gauge pressure calibration on Rosemount 3051SAM A4 only	★
C4[1]	NAMUR alarm and saturation levels, High alarm	★
C5[1]	NAMUR alarm and saturation levels, Low alarm	★
C6[1]	Custom alarm and saturation levels, High alarm (requires C1 and *Configuration Data Sheet*)	★
C7[1]	Custom alarm and saturation levels, Low alarm (requires C1 and *Configuration Data Sheet*)	★
C8[1]	Low alarm (standard Rosemount alarm and saturation levels)	★

(1) *Not available with **Configuration type** code S.*

Special configuration (hardware)

Code	Description	
D2[1]	½–14 NPT flange adapters	★
D4[2]	External ground screw assembly	★
D5[1]	Delete transmitter drain/vent valves (install plugs)	★
D7[1]	Coplanar™ flange without drain/vent ports	
D9[1]	RC ½ flange adapters	

(1) *Not available with **Process connection** code A11.*
(2) *This assembly is included with options E1, N1, K1, ND, E4, E7, N7, K7, E2, KA, KC, KD, K2, T1, EP, and KP.*

Product certifications

Code	Description	
E1	ATEX Flameproof	★
I1	ATEX Intrinsic Safety	★
N1	ATEX Type n	★
K1	ATEX Flameproof and Intrinsically Safe, Type n, Dust	★
ND	ATEX Dust	★
E4	Japan Flameproof	★
E5	USA Explosion-proof, Dust Ignition-proof	★
I5	USA Intrinsically Safe, Division 2	★
K5	USA Explosion-proof, Dust Ignition-proof, Intrinsically Safe, Division 2	★
E6(1)	Canada Explosion-proof, Dust Ignition-proof, Division 2	★
I6	Canada Intrinsically Safe	★
K6(1)	Canada Explosion-proof, Dust Ignition-proof, Intrinsically Safe, Division 2	★
E7	IECEx Flameproof	★
I7	IECEx Intrinsic Safety	★
N7	IECEx Type n	★
K7	IECEx Flameproof, Intrinsic Safety, Type n	★
E2	Brazil Flameproof	★
I2	Brazil Intrinsically Safe	★
K2	Brazil Flameproof, Intrinsic Safety, Type n	★
E3	China Flameproof	★
I3	China Intrinsic Safety, Dust Ignition-proof	★
EP	Korea Flameproof	★
IP	Korea Intrinsic Safety	★
KP	Korea Flameproof, Intrinsic Safety	★
EM	Technical Regulations Customs Union (EAC) Flameproof	★
IM	Technical Regulations Customs Union (EAC) Intrinsic Safety	★
KM	Technical Regulations Customs Union (EAC) Flameproof, Intrinsic Safety	★
KA(1)	ATEX and Canada Flameproof, Intrinsically Safe, Division 2	★
KB(1)	USA and Canada Explosion-proof, Dust Ignition-proof, Intrinsically Safe, Division 2	★
KC	USA and ATEX Explosion-proof, Intrinsically Safe, Division 2	★
KD(1)	USA, Canada, and ATEX Explosion-proof, Intrinsically Safe	★
EW	India Flameproof Approval	★
IW	India Intrinsic Safety	★
KW	India Flameproof and Intrinsically Safe	★

(1) *Not available with M20 or G½ conduit entry size.*

Shipboard approvals

Code	Description	
SBS	American Bureau of Shipping (ABS) Type Approval	★
SBV	Bureau Veritas (BV) Type Approval	★
SDN	Det Norske Veritas (DNV) Type Approval	★
SLL	Lloyds Register (LR) Type Approval	★

Calibration certification

Code	Description	
Q4	Calibration certificate	★
QP	Calibration certificate and tamper evident seal	★

Material traceability certification

Code	Description	
Q8	Material traceability certification per EN 10204 3.1	★

Quality certification for safety

Not available with **Output** codes F or X.

Code	Description	
QT	Safety certified to IEC 61508 with certificate of failure mode, effects, and diagnostic analysis (FMEDA)	★

Surface finish certification

Code	Description	
Q16	Surface finish certification for hygienic remote seals	★

Seal system performance reports

The QZ report quantifies the performance of the entire ERS™ system. One report is provided per ERS system. The QZ option is specified on the primary transmitter (**Configuration type** code P).

Code	Description	
QZ	Remote seal system performance calculation report	★

Terminal blocks

This is not available with **Configuration type** code S.

Code	Description	
T1	Transient terminal block	★

Sensor fill fluid

Silicone fill fluid is standard.

Code	Description	
L1	Inert sensor fill fluid	★

O-ring

Code	Description	
L2	Graphite-filled PTFE O-ring	★

Bolting material

Code	Description	
L4	Austenitic 316 stainless steel (SST) bolts	★
L5(1)	ASTM A 193, Grade B7M bolts	★
L6	Alloy K-500 bolts	★
L7(1)	ASTM A 453, Class D, Grade 660 bolts	★
L8	ASTM A 193, Class 2, Grade B8M bolts	★

(1) *Materials of construction comply with metallurgical requirements highlighted within NACE® MR 0175/International Organization for Standardization (ISO) 15156 for sour oil field production environments. Environmental limits apply to certain materials. Consult latest standard for details. Selected materials also conform to NACE MR 0103 for sour refining environments. Order with Q15 or Q25 to receive a NACE certificate.*

Display type (ERS™ primary only)

This is not available with **Configuration type** code S.

Code	Description	
M5	Plantweb™ LCD display	★
M7(1)	Remote mount LCD display and interface, Plantweb housing, no cable, stainless steel (SST) bracket	★
M8	Remote mount LCD display and interface, Plantweb housing, 50 ft. (15.2 m) cable, SST bracket	★
M9	Remote mount LCD display and interface, Plantweb housing, 100 ft. (30.5 m) cable, SST bracket	★

(1) *See the Rosemount 3051S Series Scalable Pressure, Flow, and Level Solution Reference Manual for cable requirements. Contact an Emerson representative for additional information.*

Pressure testing

Code	Description	
P1	Hydrostatic testing with certificate	

Special cleaning

This is not available with **Process connection** code A11.

Code	Description	
P2	Cleaning for special services	
P3	Cleaning for less than 1 ppm chlorine/fluorine	

NACE® certificate

Materials of construction comply with metallurgical requirements highlighted within NACE MR 0175/International Organization for Standardization (ISO) 15156 for sour oil field production environments. Environmental limits apply to certain materials. Consult latest standard for details. Selected materials also conform to NACE MR 0103 for sour refining environments. Order with Q15 or Q25 to receive a NACE certificate.

Code	Description	
Q15	Certificate of compliance to NACE MR0175/ISO 15156 for wetted materials	★
Q25	Certificate of compliance to NACE MR0103 for wetted materials	★

Rosemount 3051SAL Transmitter for ERS™ applications



- Integrated transmitter and direct mount seal in a single model number
- Variety of process connections including flanged, threaded, and hygienic remote seals
- Available with 15-year limited warranty

A Rosemount 3051SAL Scalable™ ERS Level Transmitter consists of three parts. First, specify the transmitter model codes found below. Finish the model number by specifying all desired options from the *Additional options* section.

Required model components

Model

Code	Transmitter type	
3051SAL	Scalable™ level transmitter	★

Performance class

The Rosemount 3051S ERS™ System offer three performance class options: Classic, Ultra, and Enhanced ERS System Performance. The Classic and Ultra performance classes are suited to lower static pressure and stable temperature conditions. The Enhanced ERS System Performance class provides better performance across temperature (–40 to +185 °F [–40 to +85 °C]) with improved performance at higher static pressure.

Code	Description	
1	Ultra: 0.055 % span accuracy, 150:1 rangedown, 15-year limited warranty	★
2	Classic: 0.065 % span accuracy, 150:1 rangedown	★
4	Enhanced ERS System Performance: 15-year limited warranty	★

Configuration type

Code	Description	
P	ERS™ - primary	★
S	ERS - secondary	★

Pressure type

Code	Description		
	Module	**Sensor**	
G	Coplanar™	Gauge	★
T	In-line	Gauge	★
E	In-line	Absolute	★
A	Coplanar	Absolute	

Pressure range

Specify the pressure range based on the maximum static pressure, not differential pressure.

Code	Description				
	Coplanar™ gauge	**In-line gauge**	**In-line absolute**	**Coplanar absolute**	
1A	N/A	–14.7 to 30 psig (–1.01 to 2.06 bar)	0 to 30 psia (0 to 2.06 bar)	0 to 30 psia (0 to 2.06 bar)	★
2A	–250 to 250 inH_2O (–621.6 to 621.6 mbar)	–14.7 to 150 psig (–1.01 to 10.34 bar)	0 to 150 psia (0 to 10.34 bar)	0 to 150 psia (0 to 10.34 bar)	★
3A	–393 to 1,000 inH_2O (–0.97 to 2.48 bar)	–14.7 to 800 psig (–1.01 to 55.15 bar)	0 to 800 psia (0 to 55.15 bar)	0 to 800 psia (0 to 55.15 bar)	★
4A	–14.2 to 300 psig (–0.97 to 20.68 bar)	–14.7 to 4,000 psig (–1.01 to 275.79 bar)	0 to 4,000 psia (0 to 275.79 bar)	0 to 4,000 psia (0 to 275.79 bar)	★
5A	–14.2 to 2,000 psig (–0.97 to 137.89 bar)	–14.7 to 10,000 psig (–1.01 to 689.47 bar)	0 to 10,000 psia (0 to 689.47 bar)	N/A	★

Transmitter output

Code	Description	
A	4–20 mA with digital signal based on HART® protocol	★

Housing style

Code	Description	Material	Conduit entry size	
Housings for ERS™ primary - Configuration type code P				
1A	Plantweb™ housing	Aluminum	½–14 NPT	★
1B	Plantweb housing	Aluminum	M20 x 1.5 (CM 20)	★
1J	Plantweb housing	Stainless steel (SST)	½–14 NPT	★
1K	Plantweb housing	SST	M20 x 1.5 (CM 20)	★
2E	Junction box with remote display output	Aluminum	½–14 NPT	★
2F	Junction box with remote display output	Aluminum	M20 x 1.5 (CM 20)	★
2M	Junction box with remote display output	SST	½–14 NPT	★
1C	Plantweb housing	Aluminum	G½	
1L	Plantweb housing	SST	G½	
2G	Junction box with remote display output	Aluminum	G½	

Code	Description	Material	Conduit entry size	
Housings for ERS™ primary - Configuration type code P				
Housings for ERS secondary - Configuration type code S				
2A	Junction box	Aluminum	½–14 NPT	★
2B	Junction box	Aluminum	M20 x 1.5 (CM 20)	★
2J	Junction box	SST	½–14 NPT	★
2C	Junction box	Aluminum	G½	

Seal system type

See *Seal system type* in Rosemount DP Level Transmitters and 1199 Diaphragm Seal Systems Product Data Sheet for more detail.

Code	Description		
Coplanar™ pressure module type			
1	Single direct mount seal system	Welded-repairable	★
2	Single direct mount seal system	All welded	★
In-line pressure module type			
1	Single direct mount seal system	All welded	★

High side connection type

Code	Description	
Single direct mount seal system (between transmitter and remote seal)		
0	No extension	★
2	2-in. (50 mm) extension	★
4	4-in. (100 mm) extension	★
5(1)	Thermal optimizer	★
6(2)	Thermal range expander - silicone 200 secondary fill fluid	★
7(2)(3)	Thermal range expander - SYLTHERM™ XLT secondary fill fluid	★
8(2)	Thermal range expander - Tri-Therm 300 secondary fill fluid	

(1) *Maximum working pressure (MWP) of the thermal optimizer is 4,000 psi (275 bar).*
(2) *Maximum working pressure (MWP) of the thermal range expander is 3,750 psi (258.6 bar).*
(3) *Emerson does not recommend thermal range expander with SYLTHERM XLT secondary fill fluid for use in vacuum applications below 6 psia (400 mbar-a).*

Low side connection type (reference pressure connection)

Code	Low side connection type (reference pressure connection)	
Single direct mount seal system		
00	None (in-line style sensor)	★
20	316L stainless steel (SST) isolator/SST transmitter flange	★
30	Alloy C-276 isolator/SST transmitter flange	★

Seal fill fluid

Code	Description	Specific gravity at 77 °F (25 °C)	Temperature limits[1][2]				
			No extension	2-in. (50 mm) extension	4-in. (100 mm) extension	Thermal range expander[3]	
D	Silicone 200	0.934	–49 to +401 °F (–45 to +205 °C)			N/A	★
F	Silicone 200 for vacuum applications	0.934	[5]				★
J[4]	Tri-Therm 300	0.795	–40 to +401 °F (–40 to +205 °C)	–40 to +464 °F (–40 to +240 °C)	–40 to +572 °F (–40 to +300 °C)	N/A	★
Q[4]	Tri-Therm 300 for vacuum applications	0.795	[5]				★
L	Silicone 704	1.07	32 to 401 °F (0 to 205 °C)	32 to 464 °F (0 to 240 °C)	32 to 572 °F (0 to 300 °C)	Up to 599 °F (315 °C)	★
C	Silicone 704 for vacuum applications	1.07	[5]				★
R	Silicone 705	1.09	68 to 401 °F (20 to 205 °C)	68 to 464 °F (20 to 240 °C)	68 to 572 °F (20 to 300 °C)	Up to 698 °F (370 °C)	★
V	Silicone 705 for vacuum applications	1.09	[5]				★
A[5]	SYLTHERM™ XLT	0.85	–157 to +293 °F (–105 to +145 °C)			N/A	★
H[5]	Inert (Halocarbon)	1.85	–49 to +320 °F (–45 to +160 °C)			N/A	★
G[4][6]	Glycerin and water	1.13	+5 to +203 °F (–15 to +95 °C)			N/A	★
N[4][5]	Neobee® M-20	0.94	+5 to +401 °F (–15 to +205 °C)	+5 to +437 °F (–15 to +225 °C)		N/A	★
P[4][6]	Propylene glycol and water	1.02	+5 to +203 °F (–15 to +95 °C)			N/A	★
Y[7]	UltraTherm™ 805	1.20	N/A			Up to 770 °F (410 °C)[8]	★
Z[7]	UltraTherm 805 for vacuum applications	1.20	[5]				★
Continue specifying a completed model number by choosing a remote **Seal style**.							

(1) *At ambient pressure of 14.7 psia (1 bar-a) and ambient temperature of 70 °F (21 °C). Temperature limits are reduced in vacuum service and may be limited by seal selection.*
(2) *Due to heat transfer to the transmitter, the maximum process temperature of the transmitter will be de-rated if ambient or process temperatures exceed 185 °F (85 °C). Consult Instrument Toolkit™ to verify the application.*
(3) *For complete process and ambient temperature limits, see thermal range expander temperature operating range.*
(4) *This is a food grade fill fluid.*
(5) *For use in vacuum applications below 14.7 psia (1 bar-a), refer to vapor pressure curves in Rosemount DP Level Fill Fluid Specifications Technical Note.*
(6) *Not suitable for vacuum applications.*
(7) *Only available with thermal range expander.*
(8) *UltraTherm 805 supports maximum design temperature of 850 °F (454 °C). Design temperature rating is for non-continuous use with a cumulative exposure time less of than 12 hours.*

Seal style

Seal type	Model	Process connection
	Flush Flanged (FF) Seal	2 in./DN 50/50A 3 in./DN 80/80A 4 in./DN 100/100A

Seal type	Model	Process connection
	Extended Flanged (EF) Seal	3 in./DN 80/80A 4 in./DN 100/100A
	Remote Flanged (RF) Seal	½ in. ¾ in. 1 in./DN 25/25A 1½ in./DN 40/40A
	PF Pancake Seal	2 in./DN 50/50A 3 in./DN 80/80A
	FC flush flanged seal - ring type joint (RTJ) gasket surface	2 in. 3 in.
	RC Remote Flanged Seal - Ring Type Joint (RTJ) gasket surface	½ in. ¾ in. 1 in. 1½ in.
	Remote Threaded (RT) Seal	¼ –18 NPT ½ –14 NPT ¾ –14 NPT 1–11.5 NPT 1¼–11.5 NPT
	SC Hygienic Tri-Clamp® Seal	1½ in. 2 in. 3 in.
	SS Hygienic Tank Spud Seal	4 in.

Additional options

Extended product warranty

Code	Description	
WR3	3-year limited warranty	★
WR5	5-year limited warranty	★

ERS™ connection cable

The pressure range should be specified based on the maximum static pressure, not differential pressure.

Code	Description	
R02	25 ft. (7.62 m) of ERS cable (gray color)	
R05	50 ft. (15.2 m) of ERS cable (gray color)	★
R10	100 ft. (30.5 m) of ERS cable (gray color)	★
R15	150 ft. (45.72 m) of ERS cable (gray color)	★

Code	Description	
R20[1]	200 ft. (60.96 m) of ERS cable (gray color)	
R22[2]	225 ft. (68.58 m) of ERS cable (gray color)	
R30	300 ft. (91.44 m) of ERS cable (gray color)	
R40	400 ft. (121.92 m) of ERS cable (gray color)	
R50	500 ft. (152.4 m) of ERS cable (gray color)	
H02	25 ft. (7.62 m) of ERS cable (blue color)	
H05	50 ft. (15.2 m) of ERS cable (blue color)	
H10	100 ft. (30.5 m) of ERS cable (blue color)	
H15	150 ft. (45.7 m) of ERS cable (blue color)	
H20[1]	200 ft. (60.96 m) of ERS cable (blue color)	
H22[1]	225 ft. (68.58 m) of ERS cable (blue color)	
J02	25 ft. (7.62 m) of armored ERS cable	
J05	50 ft. (15.2 m) of armored ERS cable	
J07	75 ft. (22.8 m) of armored ERS cable	
J10	100 ft. (30.5 m) of armored ERS cable	
J12[2]	125 ft. (38.1 m) of armored ERS cable	

(1) *Maximum cable distance for Safety Instrumented Systems (SIS) installations. See Safety Instrumented Systems (SIS) certification section of Rosemount 3051S Electronic Remote Sensor (ERS) System Reference Manual for more information.*
(2) *Maximum cable distance for intrinsically safe (IS) installations. Other options may not be valid at longer distances.*

Software configuration

This is not available with **Configuration type** code S.

Code	Description	
C1	Custom software configuration (requires *Configuration Data Sheet*)	★

Gauge pressure calibration

Code	Description	
C3	Gauge pressure calibration on Rosemount 3051SAL A4 only	★

Alarm limit

This is not available with **Configuration type** code S.

Code	Description	
C4	NAMUR alarm and saturation levels, High alarm	★
C5	NAMUR alarm and saturation levels, Low alarm	★
C6	Custom alarm and saturation levels, High alarm (requires C1 and *Configuration Data Sheet*)	★
C7	Custom alarm and saturation levels, Low alarm (requires C1 and *Configuration Data Sheet*)	★
C8	Low alarm (standard Rosemount alarm and saturation levels)	★

Ground screw

This assembly is included with options EP, KP, E1, N1, K1, ND, E4, E7, N7, K7, E2, KA, KC, KD, K2, T1, E3, EM, KM.

Code	Description	
D4	External ground screw assembly	★

Conduit plug

Code	Description	
DO	316 stainless steel (SST) conduit plug	★

Product certifications

Code	Description	
E1	ATEX Flameproof	★
I1	ATEX Intrinsic Safety	★
N1	ATEX Type n	★
K1	ATEX Flameproof and Intrinsically Safe, Type n, Dust	★
ND	ATEX Dust	★
E4	Japan Flameproof	★
E5	USA Explosion-proof, Dust Ignition-proof	★
I5	USA Intrinsically Safe, Division 2	★
K5	USA Explosion-proof, Dust Ignition-proof, Intrinsically Safe, Division 2	★
E6[(1)]	Canada Explosion-proof, Dust Ignition-proof, Division 2	★
I6	Canada Intrinsically Safe	★
K6[(1)]	Canada Explosion-proof, Dust Ignition-proof, Intrinsically Safe, Division 2	★
E7	IECEx Flameproof	★
I7	IECEx Intrinsic Safety	★
N7	IECEx Type n	★
K7	IECEx Flameproof, Intrinsic Safety, Type n	★
E2	Brazil Flameproof	★
I2	Brazil Intrinsically Safe	★
K2	Brazil Flameproof, Intrinsic Safety, Type n	★
E3	China Flameproof	★
I3	China Intrinsic Safety, Dust Ignition-proof	★
EP	Korea Flameproof	★
IP	Korea Intrinsic Safety	★
KP	Korea Flameproof, Intrinsic Safety	★
EM	Technical Regulations Customs Union (EAC) Flameproof	★
IM	Technical Regulations Customs Union (EAC) Intrinsic Safety	★
KM	Technical Regulations Customs Union (EAC) Flameproof, Intrinsic Safety	★
KA[(1)]	ATEX and Canada Flameproof, Intrinsically Safe, Division 2	★

Code	Description	
KB[1]	USA and Canada Explosion-proof, Dust Ignition-proof, Intrinsically Safe, Division 2	★
KC	USA and ATEX Explosion-proof, Intrinsically Safe, Division 2	★
KD[1]	USA, Canada, and ATEX Explosion-proof, Intrinsically Safe	★
EW	India Flameproof Approval	★
IW	India Intrinsic Safety	★
KW	India Flameproof and Intrinsically Safe	★

(1) *Not available with M20 or G½ conduit entry size.*

Shipboard approvals

Code	Description	
SBS	American Bureau of Shipping (ABS) Type Approval	★
SBV	Bureau Veritas (BV) Type Approval	★
SDN	Det Norske Veritas (DNV) Type Approval	★
SLL	Lloyds Register (LR) Type Approval	★

Sensor fill fluid

Silicone fill fluid is standard.

Code	Description	
L1	Inert sensor fill fluid	★

O-ring

Code	Description	
L2	Graphite-filled PTFE O-ring	★

Bolting material

Code	Description	
L4	Austenitic 316 stainless steel (SST) bolts	★

Display type (ERS™ primary only)

This is not available with **Configuration type** code S.

Code	Description	
M5	Plantweb™ LCD display	★
M7[1]	Remote mount LCD display and interface, Plantweb housing, no cable, stainless steel (SST) bracket	★
M8	Remote mount LCD display and interface, Plantweb housing, 50 ft. (15.2 m) cable, SST bracket	★
M9	Remote mount LCD display and interface, Plantweb housing, 100 ft. (30.5 m) cable, SST bracket	★

(1) *See the Rosemount 3051S Series Scalable Pressure, Flow, and Level Solution Reference Manual for cable requirements. Contact an Emerson representative for additional information.*

Pressure testing

Code	Description	
P1	Hydrostatic testing with certificate	

Special cleaning

This is not available with **Process connection** code A11.

Code	Description	
P2	Cleaning for special services	
P3	Cleaning for less than 1 ppm chlorine/fluorine	

Calibration certification

Code	Description	
Q4	Calibration certificate	★
QP	Calibration certificate and tamper evident seal	★

Material traceability certification

Code	Description	
Q8	Material traceability certification per EN 10204 3.1	★

Quality certification for safety

Not available with **Output** codes F or X.

Code	Description	
QT	Safety certified to IEC 61508 with certificate of failure mode, effects, and diagnostic analysis (FMEDA)	★

Seal system performance reports

The QZ report quantifies the performance of the entire ERS™ system. One report is provided per ERS system. The QZ option is specified on the primary transmitter (**Configuration type** code P).

Code	Description	
QZ	Remote seal system performance calculation report	★

Transient protection

This is not available with **Configuration type** code S.

Code	Description	
T1	Transient terminal block	★

NACE® certificate

Materials of construction comply with metallurgical requirements highlighted within NACE MR 0175/International Organization for Standardization (ISO) 15156 for sour oil field production environments. Environmental limits apply to certain materials. Consult latest standard for details. Selected materials also conform to NACE MR 0103 for

sour refining environments. UltraTherm™ 805 supports maximum design temperature of 850 °F (454 °C). Design temperature rating is for non-continuous use with a cumulative exposure time less of than 12 hours.

Code	Description	
Q15	Certificate of compliance to NACE MR0175/ISO 15156 for wetted materials	★
Q25	Certificate of compliance to NACE MR0103 for wetted materials	★

Rosemount 3051S Scalable™ Level Transmitter

3051S Scalable Level Transmitters combine the features and benefits of a high-performance 3051S with the durability and reliability of diaphragm seals all in a single model number.

3051SAL In-line with flushed flange (FF) seal



3051SAL Coplanar™ with SS hygienic tank spud seal



3051SAL Tuned-System™ Assembly with thermal range expander





Product features and capabilities include:

- Variety of process connections including flanged, threaded, and hygienic seals
- Quantified performance for the entire transmitter/seal assembly (QZ option)
- HART®, FOUNDATION™ Fieldbus, and wireless protocols

VIEW PRODUCT >

3051SAL Scalable Level Transmitter

A 3051SAL Scalable ERS™ Level Transmitter consists of three parts. First, specify the transmitter model codes found below. Then, specify a direct mount seal found. Finish the model number by specifying all desired options from the *Additional options* section.

Online product configurator

Many products are configurable online using our product configurator.

Select the **Configure** button or visit Emerson.com/global to start. With this tool's built-in logic and continuous validation, you can configure your products more quickly and accurately.

Specifications and options

The purchaser of the equipment must specify and select:

- Product materials
- Options
- Components

Sizing and selection

Use the Differential Pressure (DP) Level Sizing & Selection Tool to size Rosemount DP Level meters to meet your application-specific requirements.

The Sizing & Selection tool:

1. Verifies if a selected product meets your application requirements.
2. Provide a comparison between different system types.
3. Generates a detailed accuracy comparison graph.

Once a sizing is completed, the configuration tool will help create a complete and valid model code to match your requirements and include any additional options or approvals.

Optimizing lead time

The starred offerings (★) represent the most common options and should be selected for the fastest delivery. The non-starred offerings are subject to additional delivery lead time.

Required model components

Model

Code	Transmitter type	
3051SAL	Scalable™ level transmitter	★

Performance class

Code	Description	
1	Ultra: 0.055 % span accuracy, 150:1 rangedown, 15-year limited warranty	★
2	Classic: 0.065 % span accuracy, 150:1 rangedown	★

Configuration type

Code	Description	
C	Liquid level transmitter	★

Pressure module type

Code	Module type	Sensor type	
D	Coplanar™	Differential	★
G	Coplanar	Gauge	★
T	In-line	Gauge	

Pressure range

Code	Coplanar™ differential pressure (DP)	Coplanar gauge	In-line gauge	In-line absolute	Coplanar absolute	
1A	N/A	N/A	–14.7 to 30 psig (–1.01 to 2.06 bar)	0 to 30 psia (0 to 2.06 bar)	0 to 30 psia (0 to 2.06 bar)	★
2A	–250 to 250 inH_2O (–621.6 to 621.6 mbar)	–250 to 250 inH_2O (–621.6 to 621.6 mbar)	–14.7 to 150 psig (–1.01 to 10.34 bar)	0 to 150 psia (0 to 10.34 bar)	0 to 150 psia (0 to 10.34 bar)	★
3A	–1,000 to 1,000 inH_2O (–2.48 to 2.48 bar)	–393 to 1,000 inH_2O (–0.97 to 2.48 bar)	–14.7 to 800 psig (–1.01 to 55.15 bar)	0 to 800 psia (0 to 55.15 bar)	0 to 800 psia (0 to 55.15 bar)	★
4A	–300 to 300 psi (–20.68 to 20.68 bar)	–14.2 to 300 psig (–0.97 to 20.68 bar)	–14.7 to 4,000 psig (–1.01 to 275.79 bar)	0 to 4,000 psia (0 to 275.79 bar)	0 to 4,000 psia (0 to 275.79 bar)	★
5A	–2,000 to 2,000 psi (–137.89 to 137.89 bar)	–14.2 to 2,000 psig (–0.97 to 137.89 bar)	–14.7 to 10,000 psig (–1.01 to 689.47 bar)	0 to 10,000 psia (0 to 689.47 bar)	N/A	★

Transmitter output

Code	Description	
A	4–20 mA with digital signal based on HART® protocol	★
F(1)	FOUNDATION™ Fieldbus protocol	★
X(2)	Wireless (requires wireless options and wireless Plantweb™ housing)	★

(1) *Requires Plantweb housing.*
(2) *Only intrinsically safe approval codes apply.*

Housing style

Code	Description	Material	Conduit entry size	
00	None (SuperModule™ spare part, order **Output** code A)	N/A	N/A	★
1A	Plantweb™ housing	Aluminum	½–14 NPT	★
1B	Plantweb™ housing	Aluminum	M20 x 1.5	★
1J	Plantweb housing	SST	½–14 NPT	★
1K	Plantweb housing	Stainless steel (SST)	M20 x 1.5	★
5A(1)	Wireless Plantweb housing	Aluminum	½–14 NPT	★
5J(1)	Wireless Plantweb housing	SST	½–14 NPT	★
2E	Junction box housing with output for remote display and interface	Aluminum	½–14 NPT	★
2F	Junction box housing with output for remote display and interface	Aluminum	M20 x 1.5	★

Code	Description	Material	Conduit entry size	
2M	Junction box housing with output for remote display and interface	SST	½–14 NPT	★
1C	Plantweb housing	Aluminum	G½	
1L	Plantweb housing	SST	G½	
2G	Junction box housing with output for remote display and interface	Aluminum	G½	

(1) *Only available with **Output** code X.*

Seal system type

Code	Coplanar™ pressure module type		In-line pressure module type		
1	Direct mount single seal system	Welded-repairable	Direct mount single seal system	All welded	★
2	Direct mount single seal system	All welded	N/A	N/A	★
3	Tuned-System™ assembly - one direct mount and one remote mount seal with capillary	Welded-repairable	N/A	N/A	★
4	Tuned-System assembly - one direct mount and one remote mount seal with capillary	All welded	N/A	N/A	★
5	Balanced system - two remote mount seals with equal lengths of capillary	Welded-repairable	N/A	N/A	★
B	Balanced system - two remote mount seals with equal lengths of capillary	All welded	N/A	N/A	★
7	Remote mount single seal system with capillary - 316L low side transmitter isolator	Welded-repairable	Remote mount single seal system with capillary	All welded	★
8	Remote mount single seal system with capillary (legacy design)	316L low side transmitter isolator - all welded	N/A	N/A	★
C	Remote mount single seal system with capillary - 316L low side transmitter isolator	All welded	N/A	N/A	★
9	Remote mount single seal system with capillary - alloy C-276 low side transmitter isolator	Welded-repairable	N/A	N/A	★
A	Remote mount single seal system with capillary (legacy design)	Alloy C-276 low side transmitter isolator - all welded	N/A	N/A	★
D	Remote mount single seal system with capillary - alloy C-276 low side transmitter isolator	All welded	N/A	N/A	★

High side connection type (select based on seal system type chosen)

Code	Single seal system				Dual seal system		
	Direct mount		Remote mount with capillary		Tuned-System™ assembly	Balanced system	
	Coplanar™	In-line	Coplanar	In-line	Coplanar	Coplanar	
0	No extension		Standard	Standard	No extension/ standard	Standard	★

Code	Single seal system				Dual seal system		
	Direct mount		Remote mount with capillary		Tuned-System™ assembly	Balanced system	
2	2-inch (51 mm) extension	N/A	N/A	N/A	2-inch (51 mm) extension		★
4	4-inch (102 mm) extension	4-inch (102 mm) extension(1)	N/A	N/A	4-inch (102 mm) extension	N/A	★
5	N/A	Thermal optimizer	N/A	N/A	N/A	N/A	★
6(2)	Thermal range expander - silicone 200 secondary fill		Thermal range expander - silicone 200 secondary fill fluid single capillary		Thermal range expander - silicone 200 secondary fill with low side capillary		★
7(2)	Thermal range expander - SYLTHERM™ XLT secondary fill fluid		Thermal range expander - SYLTHERM XLT secondary fill fluid single capillary		Thermal range expander - SYLTHERM XLT secondary fill with low side capillary		★
8(2)	Thermal range expander - Tri-Therm 300 secondary fill fluid		Tri-Therm 300 secondary fill fluid single capillary		Tri-Therm 300 secondary fill fluid with low side capillary		

(1) *Maximum working pressure (MWP) is 4,000 psi (275 bar).*
(2) *MWP of the thermal range expander is 3,750 psi (258.6 bar).*

Low side connection type or capillary inner dimension (ID)

Code	Material for low side reference connection		Capillary ID			
	Direct mount		Remote mount with capillary	Tuned-System™ assembly	Balanced system	
	Coplanar™	In-line	Coplanar or in-line	Coplanar	Coplanar	
0	N/A	No reference connection	N/A	N/A	N/A	★
1(1)(2)	Assemble to one Rosemount remote seal	N/A	N/A	N/A	N/A	★
2	316L stainless steel (SST) isolator and SST transmitter flange	N/A	N/A	N/A	N/A	★
3	Alloy C-276 isolator and SST transmitter flange	N/A	N/A	N/A	N/A	★
B	N/A	N/A	0.03-inch (0.7 mm) ID capillary	0.03-inch (0.7 mm) ID capillary	0.03-inch (0.7 mm) ID capillary	★
C	N/A	N/A	0.04-inch (1.1 mm) ID capillary	0.04-inch (1.1 mm) ID capillary	0.04-inch (1.1 mm) ID capillary	★
D	N/A	N/A	0.075-inch (1.9 mm) ID capillary	0.075-inch (1.9 mm) ID capillary	0.075-inch (1.9 mm) ID capillary	★
E(3)	N/A	N/A	0.03-in. (0.7 mm) ID capillary, PVC coated with closed end	0.03-in. (0.7 mm) ID capillary, PVC coated with closed end	0.03-in. (0.7 mm) ID capillary, PVC coated with closed end	★
F	N/A	N/A	0.04-in. (1.1 mm) ID capillary, PVC coated with closed end	0.04-in. (1.1 mm) ID capillary, PVC coated with closed end	0.04-in. (1.1 mm) ID capillary, PVC coated with closed end	★

Code	Material for low side reference connection		Capillary ID			
	Direct mount		Remote mount with capillary	Tuned-System™ assembly	Balanced system	
G	N/A	N/A	0.075-in. (1.9 mm) ID capillary, PVC coated with closed end	0.075-in. (1.9 mm) ID capillary, PVC coated with closed end	0.075-in. (1.9 mm) ID capillary, PVC coated with closed end	★

(1) *Requires separate Rosemount 1199 or 1299 model number to be selected. With option code 1, you must select **Seal location** option code M (low side of transmitter) in the Rosemount Remote Mount Seal System Model.*
(2) *Not suitable for vacuum applications.*
(3) *PVC coating should not be exposed to temperatures above 212 °F (100 °C) to avoid possibility of thermal breakdown.*

Capillary length

Capillary length applies to both high and low side for balanced systems. Applies to low side only for Tuned-System™ assemblies. Applies to high side only for remote mount single seal systems with capillary.

Code	Description	
0	No capillary (required for direct mount single seal system)	★
A	1 ft. (0.3 m)	★
B	5 ft. (1.5 m)	★
C	10 ft. (3 m)	★
D	15 ft. (4.5 m)	★
E	20 ft. (6.1 m)	★
F	25 ft. (7.6 m)	★
G	30 ft. (9.1 m)	★
H	35 ft. (10.7 m)	★
J	40 ft. (12.2 m)	★
K	45 ft. (13.7 m)	★
L	50 ft. (15.2 m)	★
M	1.6 ft. (0.5 m)	★
N	3.3 ft. (1 m)	★
P	4.9 ft. (1.5 m)	★
R	6.6 ft. (2 m)	★
T	8.2 ft. (2.5 m)	★
U	9.8 ft. (3 m)	★
V	11.5 ft. (3.5 m)	★
W	13.1 ft. (4 m)	★
Y	16.4 ft. (5 m)	★
Z	19.7 ft. (6 m)	★
1	23 ft. (7 m)	★
2	26.2 ft. (8 m)	★
3	29.5 ft. (9 m)	★
4	32.8 ft. (10 m)	★
5	36.1 ft. (11 m)	★

Code	Description	
6	39.4 ft. (12 m)	★
7	42.6 ft. (13 m)	★
8	45.9 ft. (14 m)	★
9	49.2 ft. (15 m)	★

Seal fill fluid

Code	Description	Specific gravity at 77 °F (25 °C)	Temperature limits[1][2]				
			No extension	2-in. (50 mm) extension	4-in. (100 mm) extension	Thermal range expander[3]	
D	Silicone 200	0.934	–49 to +401 °F (–45 to +205 °C)			N/A	★
F	Silicone 200 for vacuum applications	0.934	[5]				★
J[4]	Tri-Therm 300	0.795	–40 to +401 °F (–40 to +205 °C)	–40 to +464 °F (–40 to +240 °C)	–40 to +572 °F (–40 to +300 °C)	N/A	★
Q[4]	Tri-Therm 300 for vacuum applications	0.795	[5]				★
L	Silicone 704	1.07	32 to 401 °F (0 to 205 °C)	32 to 464 °F (0 to 240 °C)	32 to 572 °F (0 to 300 °C)	Up to 599 °F (315 °C)	★
C	Silicone 704 for vacuum applications	1.07	[5]				★
R	Silicone 705	1.09	68 to 401 °F (20 to 205 °C)	68 to 464 °F (20 to 240 °C)	68 to 572 °F (20 to 300 °C)	Up to 698 °F (370 °C)	★
V	Silicone 705 for vacuum applications	1.09	[5]				★
A[5]	SYLTHERM™ XLT	0.85	–157 to +293 °F (–105 to +145 °C)			N/A	★
H[5]	Inert (Halocarbon)	1.85	–49 to +320 °F (–45 to +160 °C)			N/A	★
G[4][6]	Glycerin and water	1.13	+5 to +203 °F (–15 to +95 °C)			N/A	★
N[4][5]	Neobee® M-20	0.94	+5 to +401 °F (–15 to +205 °C)	+5 to +437 °F (–15 to +225 °C)		N/A	★
P[4][6]	Propylene glycol and water	1.02	+5 to +203 °F (–15 to +95 °C)			N/A	★
Y[7]	UltraTherm™ 805	1.20	N/A			Up to 770 °F (410 °C)[8]	★
Z[7]	UltraTherm 805 for vacuum applications	1.20	[5]				★
Continue specifying a completed model number by choosing a remote **Seal style**.							

(1) *At ambient pressure of 14.7 psia (1 bar-a) and ambient temperature of 70 °F (21 °C). Temperature limits are reduced in vacuum service and may be limited by seal selection.*
(2) *Due to heat transfer to the transmitter, the maximum process temperature of the transmitter will be de-rated if ambient or process temperatures exceed 185 °F (85 °C). Consult Instrument Toolkit™ to verify the application.*
(3) *For complete process and ambient temperature limits, see thermal range expander temperature operating range.*
(4) *This is a food grade fill fluid.*
(5) *For use in vacuum applications below 14.7 psia (1 bar-a), refer to vapor pressure curves in Rosemount DP Level Fill Fluid Specifications Technical Note.*
(6) *Not suitable for vacuum applications.*
(7) *Only available with thermal range expander.*

(8) *UltraTherm 805 supports maximum design temperature of 850 °F (454 °C). Design temperature rating is for non-continuous use with a cumulative exposure time less of than 12 hours.*

Seal style

Seal type	Model	Process connection
	Flush Flanged (FF) Seal	2 in./DN 50/50A 3 in./DN 80/80A 4 in./DN 100/100A
	Extended Flanged (EF) Seal	3 in./DN 80/80A 4 in./DN 100/100A
	Remote Flanged (RF) Seal	½ in. ¾ in. 1 in./DN 25/25A 1½ in./DN 40/40A
	PF Pancake Seal	2 in./DN 50/50A 3 in./DN 80/80A
	FC flush flanged seal - ring type joint (RTJ) gasket surface	2 in. 3 in.
	RC Remote Flanged Seal - Ring Type Joint (RTJ) gasket surface	½ in. ¾ in. 1 in. 1½ in.
	Remote Threaded (RT) Seal	¼ –18 NPT ½ –14 NPT ¾ –14 NPT 1–11.5 NPT 1¼–11.5 NPT
	SC Hygienic Tri-Clamp® Seal	1½ in. 2 in. 3 in.
	SS Hygienic Tank Spud Seal	4 in.

Wireless options

Update rate

This is only available with **Output** code X.

Code	Description	
WA	User configurable update rate	★

Operating frequency and protocol

Code	Description	
3	2.4 GHz direct sequence spread spectrum (DSSS), IEC 62591 (*Wireless*HART®)	★

Omni-directional wireless antenna

Code	Description	
WK	External antenna	★
WM	Extended range, external antenna	★
WN	High-gain, remote antenna	

SmartPower™

Long-life power module must be shipped separately; order power module 701PBKKF. This is not available with **Output** code A.

Code	Description	
1	Adapter for Black Power Module (intrinsically safe [IS] power module sold separately)	★

Additional options

HART® revision configuration (requires HART protocol output code A)

Option HR7 configures the HART output to HART Revision 7. This option requires the selection of the **Advanced diagnostics** (DA2) option. You can field configure a device with this option to HART Revision 5 or 7 if desired.

Code	Description	
HR7	Configured for HART Revision 7	★

Extended product warranty

Code	Description	
WR3	3-year limited warranty	★
WR5	5-year limited warranty	★

Plantweb™ control functionality

This is not available with **Output** codes A and X. With option code 10, you must select **Seal location** option code M. Requires FOUNDATION™ Fieldbus output code F.

Code	Description	
A01	FOUNDATION Fieldbus advanced control function block suite	★

Diagnostics suite

Code	Description	
D01[1]	FOUNDATION™ Fieldbus diagnostics suite (**Process Intelligence**, **Plugged Impulse Line Diagnostic**)	★

Code	Description	
DA2[2]	Advanced HART® diagnostics suite: ■ **Process Intelligence** ■ **Loop Integrity** ■ **Plugged Impulse Line Diagnostic** ■ **Process Alerts** ■ **Service Alerts** ■ **Variable Log** ■ **Event Log**	★

(1) *This is not available with **Output** codes X and A.*
(2) *Requires Plantweb™ housing and **Output** code A. Includes hardware adjustments as standard.*

Mounting bracket

Code	Description	
B4	Bracket, all stainless steel (SST), 2-in. pipe panel	★
BE	Bracket, 316 SST, B4-style with 316 SST bolting	★

Software configuration

This is not available with **Output** code F.

Code	Description	
C1	Custom software configuration (requires *Configuration Data Sheet*)	★

Gauge pressure calibration

Code	Description	
C3	Gauge pressure calibration on Rosemount 3051SAL A4 only	★

Alarm limit

This is not available with **Output** codes F or X.

Code	Description	
C4	NAMUR alarm and saturation levels, High alarm	★
C5	NAMUR alarm and saturation levels, Low alarm	★
C6	Custom alarm and saturation signal levels, High alarm (requires C1 and *Configuration Data Sheet*)	★
C7	Custom alarm and saturation signal levels, Low alarm (requires C1 and *Configuration Data Sheet*)	★
C8	Low alarm (standard Rosemount alarm and saturation levels)	★

Hardware adjustments

This is not available with **Output** codes F or X and **Housing style** codes 00, 2E, 2F, 2G, 2M, 5A, or 5J.

Code	Description	
D1	Hardware adjustments (**Zero**, **Span**, **Alarm**, **Security**)	★

Flange adapter

Code	Description	
D2	½–14 NPT flange adapter	★
D9	RC½ stainless steel (SST) flange adapter	

Ground screw

This assembly is included with options EP, KP, E1, N1, K1, ND, E4, E7, N7, K7, E2, E3, KA, KC, KD, IA, IB, IE, IF, IG, KG, T1, K2, N3, EM, or KM.

Code	Description	
D4	External ground screw assembly	★

Drain/vent valve

Code	Description	
D5	Delete transmitter drain/vent valves (install plugs)	★

Conduit plug

Emerson ships transmitter with 316 stainless steel (SST) conduit plug (uninstalled) in place of standard aluminum conduit plug.

Code	Description	
DO	316 SST conduit plug	★

Product certifications

Valid when SuperModule™ platform and housing have equivalent approvals.

Code	Description	
E1	ATEX Flameproof	★
I1	ATEX Intrinsic Safety	★
IA	ATEX FISCO Intrinsic Safety (FOUNDATION™ Fieldbus protocol only)	★
N1	ATEX Type n	★
K1	ATEX Flameproof and Intrinsically Safe, Type n, Dust	★
ND	ATEX Dust	★
E4	Japan Flameproof	★
E5	USA Explosion-proof, Dust Ignition-proof	★
I5	USA Intrinsically Safe, Division 2	★
IE	USA FISCO Intrinsically Safe (FOUNDATION Fieldbus protocol only)	★
K5	USA Explosion-proof, Dust Ignition-proof, Intrinsically Safe, Division 2	★
E6[(1)]	Canada Explosion-proof, Dust Ignition-proof, Division 2	★
I6	Canada Intrinsically Safe	★
IF	Canada FISCO Intrinsically Safe (FOUNDATION Fieldbus protocol only)	★
K6[(1)]	Canada Explosion-proof, Dust Ignition-proof, Intrinsically Safe, Division 2	★

Code	Description	
D3[2]	Measurement Canada Accuracy Approval	★
E7	IECEx Flameproof	★
I7	IECEx Intrinsic Safety	★
IG	IECEx FISCO Intrinsic Safety (FOUNDATION Fieldbus protocol only)	★
N7	IECEx Type n	★
K7	IECEx Flameproof, Intrinsic Safety, Type n	★
E2	Brazil Flameproof	★
I2	Brazil Intrinsically Safe	★
IB	Brazil FISCO Intrinsic Safety	★
K2	Brazil Flameproof, Intrinsic Safety, Type n	★
E3	China Flameproof	★
I3	China Intrinsic Safety, Dust Ignition-proof	★
EP	Korea Flameproof	★
IP	Korea Intrinsic Safety	★
KP	Korea Flameproof, Intrinsic Safety	★
EM	Technical Regulations Customs Union (EAC) Flameproof	★
IM	Technical Regulations Customs Union (EAC) Intrinsic Safety	★
IN	Technical Regulations Customs Union (EAC) FISCO Intrinsic Safety	
KM	Technical Regulations Customs Union (EAC) Flameproof, Intrinsic Safety	★
KA[1]	ATEX and Canada Flameproof, Intrinsically Safe, Division 2	★
KB[1]	USA and Canada Explosion-proof, Dust Ignition-proof, Intrinsically Safe, Division 2	★
KC	USA and ATEX Explosion-proof, Intrinsically Safe, Division 2	★
KD[1]	USA, Canada, and ATEX Explosion-proof, Intrinsically Safe	★
EW	India Flameproof Approval	★
IW	India Intrinsic Safety	★
IZ	India FISCO Intrinsic Safety	★
KW	India Flameproof and Intrinsically Safe	★

(1) *Not available with M20 or G½ conduit entry size.*
(2) *Requires Plantweb™ housing and hardware adjustments option code D1. Limited availability depending on transmitter type and range. Contact an Emerson representative for additional information.*

Shipboard approvals

Code	Description	
SBS	American Bureau of Shipping	★
SBV	Bureau Veritas (BV) Type Approval	★
SDN	Det Norske Veritas (DNV) Type Approval	★
SLL	Lloyd's Register (LR) Type Approval	★

Stainless steel tagging

Code	Description	
Y2	316 stainless steel (SST) nameplate, top tag, wire-on tag(s), and fasteners	★

Sensor fill fluid

Silicone fill fluid is standard.

Code	Description	
L1	Inert sensor fill fluid	★

O-ring

Code	Description	
L2	Graphite-filled PTFE O-ring	★

Bolting material

Code	Description	
L4	Austenitic 316 stainless steel (SST) bolts	★
L5(1)	ASTM A 193, Grade B7M bolts	★
L6	Alloy K-500 bolts	★
L7(1)	ASTM A 453, Class D, Grade 660 bolts	★
L8	ASTM A 193, Class 2, Grade B8M bolts	★

(1) *Materials of construction comply with metallurgical requirements highlighted within NACE® MR 0175/International Organization for Standardization (ISO) 15156 for sour oil field production environments. Environmental limits apply to certain materials. Consult latest standard for details. Selected materials also conform to NACE MR 0103 for sour refining environments. Order with Q15 or Q25 to receive a NACE certificate.*

Display type

See the Rosemount 3051S Series Scalable Pressure, Flow, and Level Solution Reference Manual for cable requirements. Contact an Emerson representative for additional information.

Not available with **Output** code A and **Housing** code 01.

Code	Description	
M5	Plantweb™ LCD display	★
M7	Remote mount LCD display and interface, Plantweb housing, no cable, stainless steel (SST) bracket	★
M8	Remote mount LCD display and interface, Plantweb housing, 50 ft. (15 m) cable, SST bracket	★
M9	Remote mount LCD display and interface, Plantweb housing, 100 ft. (31 m) cable, SST bracket	★

Pressure testing

Code	Description	
P1	Hydrostatic testing with certificate	

Special cleaning

This is not available with **Process connection** code A11.

Code	Description	
P2	Cleaning for special services	
P3	Cleaning for less than 1 ppm chlorine/fluorine	

Calibration certification

Code	Description	
Q4	Calibration certificate	★
QP	Calibration certificate and tamper evident seal	★

Material traceability certification

Code	Description	
Q8	Material traceability certification per EN 10204 3.1	★

Quality certification for safety

Not available with **Output** codes F or X.

Code	Description	
QT	Safety certified to IEC 61508 with certificate of failure mode, effects, and diagnostic analysis (FMEDA)	★

Seal system performance reports

Code	Description	
QZ	Remote seal system performance calculation report	★

Transient protection

The T1 option is not needed with FISCO **Product certifications**; transient protection is included in the FISCO **Product certifications** codes IA, IB, IE, IF, IG, and KG. This is not available with **Housing** codes 00, 5A, or 5J.

Code	Description	
T1	Transient terminal block	★

Conduit electrical connector

This is not available with **Housing** codes 5A or 5J.

Available with intrinsically safe approvals only. For FM Intrinsically Safe; Nonincendive option code I5 or FM FISCO Intrinsically Safe (option code IE), install in accordance with Rosemount drawing *03151-1009*.

Code	Description	
GE	M12, 4-pin, male connector (eurofast®)	★
GM	A size mini, 4-pin, male connector (minifast®)	★

NACE® certificate

Materials of construction comply with metallurgical requirements highlighted within NACE MR 0175/International Organization for Standardization (ISO) 15156 for sour oil field production environments. Environmental limits apply to certain materials. Consult latest standard for details. Selected materials also conform to NACE MR 0103 for sour refining environments. Order with Q15 or Q25 to receive a NACE certificate.

Code	Description	
Q15	Certificate of compliance to NACE MR0175/ISO 15156 for wetted materials	★
Q25	Certificate of compliance to NACE MR0103 for wetted materials	★

Diaphragm seals for Rosemount 3051SAL

Flush Flanged (FF) Seal



- Most common seal
- Good for use in general applications
- Easy installation on flanged connections ranging from 2 in. (DN 50) to 4 in. (DN 100)

Required model components

Model

Code	Description
FF	Flush flanged seal

Process connection size

Code	American Society of Mechanical Engineers (ASME) B16.5	EN 1092-1/GOST 33259-15	Japanese Industrial Standards (JIS) B2220	
G	2 in.	DN 50	50 A	★
7	3 in.	N/A	80 A	★
J	N/A	DN 80	N/A	★
9	4 in.	DN 100	100 A	★

Flange/pressure rating

Code	Description	
1	American Society of Mechanical Engineers (ASME) B16.5 Class 150	★
2	ASME B16.5 Class 300	★
4	ASME B16.5 Class 600	★

Code	Description	
G	PN 40 per EN 1092-1	★
5	ASME B16.5 Class 900	
6	ASME B16.5 Class 1500	
7	ASME B16.5 Class 2500	
H	PN 63 per EN 1092-1	
J	PN 100 per EN 1092-1	
A	10K per Japanese Industrial Standards (JIS) B2220	
B	20K per JIS B2220	
D	40K per JIS B2220	
E	PN 10/16 per EN 1092-1, available with DN 100 only	

Materials of construction

Code	Isolating diaphragm	Upper housing	Flange	
CA	316L stainless steel (SST)	316L SST	Carbon steel (CS)	★
DA	316L SST	316L SST	316 SST	★
CB(1)	Alloy C-276	316L SST	CS	★
DB(1)	Alloy C-276, seam-welded	316L SST	316 SST	★
D5	Duplex 2507 SST	316L SST	316 SST	
C5	Duplex 2507 SST	316L SST	CS	

(1) *Not available with **Option** code SC.*

Flushing connection ring (lower housing)

If no intermediate gasket material is selected, Emerson will supply a Klingersil® C-4401 gasket.

Lower housings are shipped loose and are not included in option P1 for hydrostatic pressure testing.

Code	Description	
0	None	★
A	316 stainless steel (SST)	★
B	Alloy C-276	★
Y	Assemble to Rosemount 319 flushing ring	★

Flushing connection quantity and size

Code	Description	
0	None	★
1	One ¼–18 NPT flushing connection	★
3	Two ¼–18 NPT flushing connections	★
7	One ½–14 NPT flushing connection	★
9	Two ½–14 NPT flushing connections	★
Y	Assemble to Rosemount 319 flushing ring	★

Additional options

Remote seal diaphragm thickness

This is not available with tantalum diaphragms (**Material of construction** codes CC and DC).

Code	Description	
SC	0.006 in. (150 µm) available with 316L stainless steel (SST)	

Flushing connection ring plugs

Code	Description	
SG	Stainless steel (SST) plug(s) for flushing connection(s)	
SH	SST drain/vent(s) for flushing connection(s)	

Drain/vent valve

Required when using **Seal system type** option codes C or D with **Differential pressure** module option code D.

Code	Description	
FV	Low side drain/vent valve	

Lower housing alignment clamp

Code	Description	
SA	Lower housing alignment clamp	★

Extended Flanged (EF) Seal



- Good for use in viscous applications with plugging issues
- Seal diaphragm installed flush with inner tank wall to prevent process plugging
- Easy installation on 3-in. (DN 80) and 4-in. (DN 100) flanged connections

Specification and selection of product materials, options, or components must be made by the purchaser of the equipment.

Required model components

Model

Code	Description	
EF	Extended flanged seal	★

Process connection size

Code	American Society of Mechanical Engineers (ASME) B16.5	EN 1092-1/GOST 33259-15	Japanese Industrial Standards (JIS) B2220	Extension diameters	
7	3-in. schedule 80	DN 80	80A	2.58 in. (66 mm)	★

Flange/pressure rating

Code	Description	
1	American Society of Mechanical Engineers (ASME) B16.5 Class 150	★
2	ASME B16.5 Class 300	★
4	ASME B16.5 Class 600	★
G	PN 40 per EN 1092-1	★
5	ASME B16.5 Class 900	
6	ASME B16.5 Class 1500	
7	ASME B16.5 Class 2500	
H	PN 63 per EN 1092-1	
J	PN 100 per EN 1092-1	
A	10K per Japanese Industrial Standards (JIS) B2220	
B	20K per JIS B2220	
D	40K per JIS B2220	
E	PN 10/16 per EN 1092-1, available with DN 100 only	

Materials of construction

Code	Isolating diaphragm	Extension/gasket surface	Mounting flange	
CA	316L stainless steel (SST)	316L SST	Carbon steel (CS)	★
DA	316L SST	316L SST	316 SST	★
CB	Alloy C-276	Alloy C-276	CS	
DB	Alloy C-276	Alloy C-276	316 SST	

Seal extension length

Code	Description	
20	2 in. (51 mm)	★
40	4 in. (102 mm)	★
60[1]	6 in. (152 mm)	

(1) *Only available with stainless steel (SST) (model codes CA and DA).*

Additional options

Cold temperature remote seal applications

Code	Description	
RB	Extra fill fluid for cold temperature applications	★

Remote seal diaphragm thickness

Code	Description	
SC	0.006 in. (150 µm) available with 316L stainless steel (SST), alloy C-276, and duplex 2205 SST for abrasive applications	

Remote seal diaphragm coating

Code	Description	
SZ	0.0002-in. (5 µm) gold-plated diaphragm	
SV	PTFE coated diaphragm for non-stick purposes	
FP(1)	CorrosionShield™ PFA coated diaphragm	

(1) *Not compatible with spiral wound gaskets.*

Remote Flanged (RF) Seal



- Designed to improve performance on smaller process connections
- Easy installation on flanged connections ranging from ½ to 1½ in. (DN 25– DN 40)
- Lower housing/flushing ring required

Required model components

Model

Code	Description	
RF	Remote flanged seal	★

Process connection size

Code	American Society of Mechanical Engineers (ASME) B16.5	EN 1092-1/GOST 33259-15	Japanese Industrial Standards (JIS) B2220	
2	1-in.	N/A	25A	★
4	1½-in.	N/A	40A	★

Flange/pressure rating

Code	Description	
1	American Society of Mechanical Engineers (ASME) B16.5 Class 150	★
2	ASME B16.5 Class 300	★
4	ASME B16.5 Class 600	★
G	PN 40 per EN 1092-1	★
5	ASME B16.5 Class 900	
6	ASME B16.5 Class 1500	
7	ASME B16.5 Class 2500	
A	10K per Japanese Industrial Standards (JIS) B2220	
B	20K per JIS B2220	
D	40K per JIS B2220	

Materials of construction

Code	Isolating diaphragm	Upper housing	Flange	
CA[(1)]	316L stainless steel (SST)	316L SST	Carbon steel (CS)	★
DA	316L SST	316L SST	316 SST	★
CB[(1)]	Alloy C-276	316L SST	CS	
DB	Alloy C-276	316L SST	316 SST	

Code	Isolating diaphragm	Upper housing	Flange	
D5	Duplex 2507 SST	316L SST	316 SST	

(1) *Not available with stud bolt design.*

Flushing connection ring material (lower housing)

If no intermediate gasket material is selected, Emerson will supply a Klingersil C-4401 aramid fiber gasket.

Lower housings are shipped loose and are not included in option P1 for hydrostatic pressure testing.

Code	Description	
A	316L stainless steel (SST)	★
B	Alloy C-276	★
Y	Assemble to Rosemount 319 flushing ring	★

Flushing connection quantity and size

Code	Description	
5	None	★
1	One ¼–18 NPT flushing connection	★
3	Two ¼–18 NPT flushing connections	★
7	One ½–14 NPT flushing connection	
9	Two ½–14 NPT flushing connections	
Y	Assemble to Rosemount 319 flushing ring	★

Additional options

Flushing connection ring plugs

Code	Description	
SG	Stainless steel (SST) plug(s) for flushing connection(s)	
SH	SST drain/vent(s) for flushing connection(s)	

Flushing ring connection gaskets

Code	Description	
SY	Klingersil C-4401 gasket	★
SJ	PTFE gasket	★
SR	Ethylene propylene gasket	
SN	GRAFOIL® gasket	
S6	Klinger® Top-Chem 2000 gasket	
SK	Barium sulfate-filled PTFE gasket	
SJ	PTFE gasket	★

PF Pancake Seal



- Remote mount connection with capillary on the side of the seal
- Support tube used to facilitate installation
- Can be ordered with or without flange

Required model components

Model

Code	Description	
PF	Pancake seal	★

Process connection size

Code	American Society of Mechanical Engineers (ASME)	EN 1092-1/GOST 33259-15	
G	2 in.	DN 50	★
7	3 in.	N/A	★
J	N/A	DN 80	★
0	No flanged supplied, seal maximum working pressure (MWP) based on customer supplied flange	N/A	★
9	N/A	No flanged supplied, seal MWP based on customer supplied flange	★
1	Class 150	N/A	★
2	Class 300	N/A	★
4	Class 600	N/A	★
G	N/A	PN40	★
5	Class 900	N/A	
6	Class 1500	N/A	
7	Class 2500	N/A	
H	N/A	PN63	
J	N/A	PN100	

Flange/pressure rating

Code	American Society of Mechanical Engineers (ASME) B16.5	EN 1092-1/GOST 33259-15	
0	No flange supplied, seal maximum working pressure (MWP) based on customer supplied flange	No flange supplied, seal MWP based on customer supplied flange	★
1	Class 150	N/A	★
2	Class 300	N/A	★

Code	American Society of Mechanical Engineers (ASME) B16.5	EN 1092-1/GOST 33259-15	
4	Class 600	N/A	★
G	N/A	PN 40	★
5	Class 900	N/A	
6	Class 1500	N/A	
7	Class 2500	N/A	
H	N/A	PN 63	
J	N/A	PN 100	

Materials of construction

Code	Isolating diaphragm	Upper housing	Flange	
LA(1)	316L stainless steel (SST)	316L SST	None	★
CA(1)	316L SST	316L SST	Carbon steel (CS)	★
DA(1)	316L SST	316L SST	316 SST	★
LB	Alloy C-276, seam-welded	316L SST	None	★
CB	Alloy C-276, seam-welded	316L SST	CS	★
DB	Alloy C-276, seam-welded	316L SST	316 SST	★
LC	Tantalum, seam-welded	316L SST	None	★
CC	Tantalum, seam-welded	316L SST	CS	★
DC	Tantalum, seam-welded	316L SST	316 SST	★
L6	Duplex 2205 SST	316 SST	None	
C6	Duplex 2205 SST	316 SST	CS	
D6	Duplex 2205 SST	316 SST	316 SST	
D5	Duplex 2507 SST	316L SST	316 SST	
C5	Duplex 2507 SST	316L SST	CS	
L5	Duplex 2507 SST	316L SST	None	

(1) *For use with customer-supplied spiral metallic gaskets.*

Flushing connection ring (lower housing)

If no intermediate gasket material is selected, Emerson will supply a Klingersil® C-4401 gasket.

Lower housings are shipped loose and are not included in option P1 for hydrostatic pressure testing.

Code	Description	
0	None	★
A	316 stainless steel (SST)	★
B	Alloy C-276	★
Y	Assemble to Rosemount 319 flushing ring	★

Flushing connection quantity and size

Code	Description	
0	None	★
1	One ¼–18 NPT flushing connection	★
3	Two ¼–18 NPT flushing connections	★
7	One ½–14 NPT flushing connection	★
9	Two ½–14 NPT flushing connections	★
Y	Assemble to Rosemount 319 flushing ring	★

Additional options

Lower housing alignment clamp

Code	Description	
SA	Lower housing alignment clamp	★

Flushing connection ring gaskets

Supplied with Klinger® C-4401 gasket if no other flushing connection ring gasket option is selected.

Code	Description	
S0	No gasket for lower housing	★
SY	Klinger C-4401 gasket	★
SJ	PTFE gasket	★
SK	Barium sulfate-filled PTFE gasket	
SN	GRAFOIL® gasket	

Flushing connection ring plugs

Code	Description	
SG	Stainless steel (SST) plug(s) for flushing connection(s)	
SH	SST drain/vent(s) for flushing connection(s)	

Remote seal diaphragm thickness

This is not available with tantalum diaphragms (**Materials of construction** codes CC and DC).

Code	Description	
SC	0.006 in. (150 µm) diaphragm thickness	

Cold temperature remote seal applications

Code	Description	
RB	Extra fill fluid for cold temperature applications	

Remote seal diaphragm coating

Code	Description	
SZ(1)	0.0002 in. (5 µm) gold-plated diaphragm	
SV	PTFE coated diaphragm for non-stick purposes	

(1) *Not available with tantalum diaphragms (**Materials of construction** codes CC and DC).*

FC flush flanged seal - ring type joint (RTJ) gasket surface



- RTJ gaskets are metallic sealing rings, often used in high pressure/high temperature applications.
- Gasket surface on seal contains groove for RTJ gasket (customer-supplied)

Required model components

Model

Code	Description
FC	Flush flanged seal - Ring Type Joint (RTJ) gasket surface

Process connection size

Code	Description	
G	2-in.	
7	3-in.	
9	4-in.	

Flange/pressure rating

Code	Description	
1	Class 150	
2	Class 300	
4	Class 600	
5	Class 900	
6	Class 1500	
7	Class 2500	

Materials of construction

Code	Diaphragm and wetted	Upper housing	Flange	
DA	316L stainless steel (SST)	316L SST	316 SST	

Code	Diaphragm and wetted	Upper housing	Flange	
KB	Alloy C-276	316L SST	316 SST	
K6	Duplex 2205 SST	316 SST	316 SST	
MB	Alloy C-276	316L SST	Carbon steel (CS)	
CA	316L SST	316L SST	CS	
M6	Duplex 2205 SST	316 SST	CS	
M5	Duplex 2507 SST	Duples 2205 SST	CS	
K5	Duplex 2507 SST	Duplex 2205 SST	316 SST	

Flushing connection ring material (lower housing)

Lower housings are shipped loose and are not included in option P1 for hydrostatic pressure testing.

Code	Description	
0	None	
A	316 stainless steel (SST)	
B	Alloy C-276	
Y	Assemble to Rosemount 319 flushing ring	

Flushing connection quantity and size

Code	Description	
0	None	
1	One ¼–18 NPT flushing connection	
3	Two ¼–18 NPT flushing connections	
7	One ½–14 NPT flushing connection	
9	Two ½–14 NPT flushing connections	
Y	Assemble to Rosemount 319 Flushing Ring	★

Additional options

Flushing ring connection plugs

Code	Description	
SF	Alloy C-276 plug(s) for flushing connection(s)	
SG	Stainless steel (SST) plug(s) for flushing connection(s)	
SH	SST drain/vent(s) for flushing connection(s)	

Remote seal diaphragm thickness

This is not available with tantalum diaphragms (**Material of construction** codes CC and DC).

Code	Description	
SC	0.006 in. (150 µm) available with 316L stainless steel (SST)	

Cold temperature remote seal applications

Code	Description	
RB	Extra fill fluid for cold temperature applications	

Remote seal diaphragm coating

This is only available on 316L stainless steel (SST) and alloy C-276.

Code	Description	
SZ	0.0002 in. (5 µm) gold-plated diaphragm	
SV	PTFE coated diaphragm for nonstick purposes only	

RC Remote Flanged Seal - Ring Type Joint (RTJ) gasket surface



- Remote mounted with capillary
- RTJ gaskets are metallic sealing rings, often used in high pressure/high temperature applications
- Gasket surface on seal contains groove for RTJ gasket (user supplied)

Required model components

Model

Code	Description
RC	Remote flanged seal - Ring Type Joint (RTJ) gasket surface

Process connection sizes

Code	Description	
1	½-in. (Class 150 to 1500 includes mounting ring bolts and mounting studs)	
A	¾-in. (Class 150 includes mounting ring bolts and mounting studs)	
2	1-in.	
4	1½-in.	

Flange/pressure rating

Code	Description	
1	Class 150	
2	Class 300	
4	Class 600	

Code	Description	
5	Class 900	
6	Class 1500	
7	Class 2500	

Materials of construction

Code	Diaphragm and wetted	Upper housing	
LA	316L SST	316L SST	
LB	Alloy C-276	316L SST	
LC	Tantalum	316L SST	

Flushing connection ring material (lower housing)

If no intermediate gasket material is selected, a Klingersil C-4401 aramid fiber gasket will be supplied.

Lower housings are shipped loose and are not included in option P1 for hydrostatic pressure testing.

Code	Description	
A	316L SST	
B	Alloy C-276	
Y	Assemble to Rosemount 319 flushing ring	

Flushing ring connection and size

Code	Description	
0	None	
1	One ¼–18 NPT flushing connection	
3	Two ¼–18 NPT flushing connections	
7	One ½–14 NPT flushing connection	
9	Two ½–14 NPT flushing connections	
Y	Assemble to Rosemount 319 Flushing Ring	★

Additional options

Flushing ring connection gaskets

Code	Description	
SY	Klingersil C-4401 gasket	★
SJ	PTFE gasket	★
SR	Ethylene propylene gasket	
SN	GRAFOIL® gasket	
S6	Klinger® Top-Chem 2000 gasket	
SK	Barium sulfate-filled PTFE gasket	
SJ	PTFE gasket	★

Flushing connection ring plugs

Code	Description	
SF	Alloy C-276 plug(s) for flushing connection(s)	
SG	316 SST plug(s) for flushing connection(s)	
SH	316 SST vent/drain for flushing connection(s)	

Remote seal diaphragm thickness

Code	Description	
SC	0.006 in. (150 µm) available with 316L stainless steel (SST), alloy C-276, and duplex 2205 SST for abrasive applications	

Remote seal bolt material

Note
Default is Tin plated CS.

Code	Description	
S3[(1)]	304 SST bolts (only available for stud bolt design)	
S4	316 SST bolts (only available for stud bolt design)	★

(1) *Standard stud bolts are carbon steel.*

Large diaphragm size

Code	Description	
S9	4.1-in. (104 mm) diaphragm diameter	

Cold temperature remote seal applications

Code	Description	
RB	Extra fill fluid for cold temperature applications	

Remote seal diaphragm coating

This is only available on 316L stainless steel (SST) and alloy C-276.

Code	Description	
SZ	0.0002 in. (5 µm) gold-plated diaphragm	
SV	PTFE coated diaphragm for nonstick purposes only	

Remote Threaded (RT) Seal



- For use with threaded process connections (¼-18 to 1-11.5 NPT)
- Rated for use in high-pressure applications (up to 2500 psi)
- Optional flushing connections available

Required model components

Model

Code	Description	
RT	Remote threaded seal	★

Process connection size

Code	Description	
3	½-14 NPT	★
4	¾-14 NPT	★
5	1-11.5 NPT	★
1	¼-18 NPT	
6	1¼ - 11.5 NPT	

Pressure rating

Code	Description	
0	2500 psi	★
2(1)	5000 psi	★

(1) *Consult an Emerson representative for pricing and availability.*

Isolating diaphragm material

Code	Description	Upper housing material	
DA	316L SST	316L SST	★
DB	Alloy C-276	316L SST	
D5	Duplex 2507 SST	316L SST	

Flushing connection ring material (lower housing)

If no intermediate gasket material is selected, a Klingersil C-4401 aramid fiber gasket will be supplied.

Default lower housing assembly bolts are carbon steel for ASME and 304 SST for EN.

Lower housings are shipped loose and are not included in option P1 for hydrostatic pressure testing.

Code	Description	
A	316L SST	★

Flushing ring connection quantity and size

Code	Description	
1	One ¼-in. flushing connection	
3	Two ¼-in. flushing connections	
5	None	
7	One ½-14 NPT flushing connection	
9	Two ½-14 NPT flushing connections	

Additional options

Remote seal flushing plug, drain/vent

Code	Description	
SG	316 SST plug(s) for flushing connection(s)	
SH	316 SST drain/vent(s) for flushing connection(s)	

SC Hygienic Tri-Clamp® Seal



- Good for use in hygienic applications
- Easy installation on Tri-Clover style Tri-Clamp connections (1.5-in. to 3-in.)
- Conforms to 3-A® standard 74-06

Required model components

Model

Code	Description	
SC(1)(2)	Tri-Clover style Tri Clamp® seal	★

(1) *Clamp and gasket furnished by user. The maximum working pressure is dependent upon the clamp pressure rating.*
(2) *All process wetted parts have surface finish of Ra < 32 µin (0.81 µm) standard unless otherwise specified.*

Process connection size

Code	Description	
5(1)	2-in.	★
7	3-in.	★

(1) *Min span is 150 inH_2O or 373 mbar for 2-in. Tri-Clamp seal.*

Maximum working pressure

Code	Description	
0	1000 PSI	★

Materials of construction

Code	Isolating diaphragm material	Upper housing material	
LA00	316L SST	316L SST	★
LB00	Alloy C-276	316L SST	

Additional options

Remote seal diaphragm polishing

Code	Description	
RE	Electropolishing	

Remote seal diaphragm surface finish

Code	Description	
RD	10 µin. (0.25 µm) Ra diaphragm surface finish	
RG	15 µin. (0.375 µm) Ra diaphragm surface finish	
RH	20 µin. (0.5 µm) Ra diaphragm surface finish	

Surface finish certification

Q16 is only available when the diaphragm seal has surface finish options (RD, RG, and RH).

Code	Description	
Q16	Surface finish certification for hygienic remote seals	★

SS Hygienic Tank Spud Seal



- Commonly used in hygienic level applications
- Seal diaphragm installed flush with inner tank wall
- Conforms to 3-A standard 74-06

Required model components

Model

Code	Description	
SS[1][2]	Hygienic Tank Spud Seal	★

(1) *Clamp and ethylene propylene O-ring (conforms to 3-A standard 74 and USP Class VI) supplied.*
(2) *All process wetted parts have surface finish of Ra < 32 µin (0.81 µm) standard unless otherwise specified.*

Process connection size

Code	Description	
A	4-in. Sch. 5 Tri-Clamp	★

Maximum working pressure (clamp rating)

Code	Description	
0	150 psi (10.3 bar)	★

Upper housing

Code	Description	
A	316L SST	★

Materials of construction

Code	Diaphragm and wetted	Extension	
AL[1]	316L SST	316L SST	★

(1) *Diaphragm brazed and TIG-welded to extension.*

Extension length

Code	Description	
2	2-in. (50 mm) extension	★

Additional options

Tank spud included with shipment

Code	Description	
S1	SST Tank spud included with shipment	★

Specifications

Performance specifications

Conformance to specification

Technology leadership, advanced manufacturing techniques, and statistical process control ensure pressure measurement specification conformance to ±3σ or better.

Reference accuracy

Stated reference accuracy equations include terminal based linearity, hysteresis, and repeatability. For FOUNDATION™ Fieldbus and wireless devices, use calibrated range in place of span.

Table 1: Transmitter with Coplanar Sensor Module (Single Variable)

For Rosemount 3051S assembled to Rosemount 1199 Remote Seals, use 3051SAL specifications.

Differential pressure (3051S_CD, 3051SMV_ _ 3 or 4) Gauge pressure (3051S_CG, 3051SAM_ _G[1])			
	Ultra	**Classic**	**Ultra for flow[2]**
Ranges 2–4	±0.025% of span; For spans less than 10:1, ±(0.005 + 0.0035[URL/Span])% of span	±0.035% of span; For spans less than 10:1, ±(0.015 + 0.005[URL/Span])% of span	±0.04% of reading up to 8:1 DP turndown from URL; ±(0.04 + 0.0023[URL/Reading])% of reading to 200:1 DP turndown from URL
Range 5	±0.05% of span; For spans less than 10:1, ±(0.005 + 0.0045[URL/Span])% of span	±0.065% of span; For spans less than 10:1, ±(0.015 + 0.005[URL/Span])% of span	N/A
Range 1	±0.09% of span; For spans less than 15:1, ±(0.015 + 0.005[URL/Span])% of span	±0.10% of span; For spans less than 15:1, ±(0.025 + 0.005[URL/Span])% of span	N/A
Range 0	±0.09% of span; For spans less than 2:1, ±0.045% of URL	±0.10% of span; For spans less than 2:1, ±0.05% of URL	N/A
Absolute pressure (3051S_CA, 3051SAM_ _A[1])			
	Ultra	**Classic**	
Ranges 1–4	±0.025% of span; For spans less than 10:1, ±(.004[URL/Span])% of span	±0.035% of span; For spans less than 10:1, ±(0.0065[URL/Span])% of span	
Range 0	±0.075% of span; For spans less than 5:1, ±(0.025 + 0.01[URL/Span])% of span	±0.075% of span; For spans less than 5:1, ±(0.025 + 0.01[URL/Span])% of span	

(1) *Specifications are for each gauge/absolute pressure sensor of the Electronic Remote Sensor (ERS)™ System and are not reflective of the DP calculation.*

(2) *Ultra for Flow is only available for Rosemount 3051S_CD ranges 2-3. For calibrated spans from 1:1 to 2:1 of URL, add ±0.005 percent of span analog output error.*

Table 2: Transmitter with In-Line Sensor Module

For Rosemount 3051S assembled to Rosemount 1199 Remote Seals, use 3051SAL specifications.

Absolute pressure (3051S_TA, 3051SAM_ _E[1]) **Gauge pressure (3051S_TG, 3051SAM_ _T[1])**		
	Ultra	**Classic**
Ranges 1– 4	±0.025% of span For spans less than 10:1, ±(0.004[URL/Span])% of span	±0.035% of span For spans less than 10:1, ±(0.0065[URL/Span])% of span
Range 5	±0.04% of span For spans less than 10:1 ±0.004% of URL	±0.065% of span For spans less than 10:1 ±0.0065% of URL

(1) *Specifications are for each gauge/absolute pressure sensor of the ERS system and are not reflective of the DP calculation.*

Table 3: Transmitter with Multivariable Sensor Module

For Rosemount 3051S assembled to Rosemount 1199 Remote Seals, use 3051SAL specifications.

Differential pressure and Static pressure (3051SMV_ _1 or 2)		
	Classic MV	**Ultra for flow[1]**
DP Ranges 2–3	±0.04% of span For spans less than 10:1, ±(0.01 + 0.004[URL/Span]) % of span	±0.04% of reading up to 8:1 DP turndown from URL ±(0.04 + 0.0023[URL/Reading])% of reading to 200:1 DP turndown from URL
DP Range 4	±0.055% of span For spans less than 10:1, ±(0.015 + 0.005[URL/ Span])% of span	±0.05% of reading up to 3:1 DP turndown from URL ±(0.05 + 0.0145[URL/RDG])% of reading to 100:1 DP turndown from URL
DP Range 5	±0.065% of span For spans less than 10:1, ±(0.015 + 0.005[URL/ Span])% of span	N/A
DP Range 1	±0.10% of span For spans less than 15:1, ±(0.025 + 0.005[URL/ Span])% of span	N/A
AP and GP Ranges 3–5[2][3]	±0.055% of span For spans less than 10:1, ±(0.0065[URL/Span])% of span	±0.025% of span For spans less than 10:1, ±(0.004[URL/Span])% of span

(1) *Ultra for Flow is only available for Rosemount 3051SMV DP ranges 2-4. For calibrated DP spans from 1:1 to 2:1 of URL, add ±0.005 percent of span analog output error with transmitter output code A.*
(2) *For DP range 1, 4 or 5, Classic MV and Ultra for Flow static pressure accuracy is ±0.055 percent of span on SP Range 4 only. For spans less than 5:1, ±(0.013[URL/Span]) percent of span.*
(3) *For DP range 4 Classic MV and Ultra for Flow static pressure accuracy is ±0.055 percent of span on SP Range 5 only. For spans less than 5:1 ±(0.013[URL/Span]) percent of span.*

Table 4: Liquid Level Transmitter

Rosemount 3051SAL		
	Ultra	**Classic**
Ranges 2–5	±0.055% of span For spans less than 10:1, ±(0.015 + 0.005[URL/Span])% of span	±0.065% of span For spans less than 10:1, ±(0.015 + 0.005[URL/Span])% of span

Table 5: DP Reference Accuracy of Rosemount 3051S ERS System

Reference Accuracy specifications for ERS system assume that the configuration contains two transmitters with identical sensor ranges, each transmitter sensor is calibrated 0 – URL, and the DP Span = 10 percent of transmitter URL.

Two coplanar gauge transmitters (3051SAM_ _G)		
	Ultra	**Classic**
Ranges 2–4	±0.035% of DP span	±0.049% of DP span

Table 5: DP Reference Accuracy of Rosemount 3051S ERS System *(continued)*

Range 5	±0.071% of DP span	±0.092% of DP span
Two coplanar absolute transmitters (3051SAM_ _A)		
	Ultra	**Classic**
Ranges 1–4	±0.035% of DP span	±0.049% of DP span
Two in-line gauge transmitters (3051SAM_ _T)		
	Ultra	**Classic**
Ranges 1–4	±0.035% of DP span	±0.049% of DP span
Two liquid level transmitters (3051SAL)		
	Ultra	**Classic**
Ranges 1–5	±0.092% of DP span	±0.092% of DP span

Process temperature RTD interface

Specifications for process temperature are for the transmitter portion only. The transmitter is compatible with any Pt 100 (100 ohm platinum) RTD. Examples of compatible RTDs include Rosemount 214C RTD Temperature Sensors.

Process temperature (3051SMV_ _1 or 3)
±0.67 °F (0.37 °C)

DP total accuracy for Enhanced ERS System performance

Includes full ambient and temperature range from –40 to 85 °C (–40 to 185 °F) requires two transmitters with identical sensor ranges. Specification are only applicable for spans down to 10:1.

Sensor type	**3051SAM_ _G2, 3051SAL_ _G2 250 inH_2O (622.1 mbar)**	**3051SAM_ _G3, 3051SAL_ _G3 1000 inH_2O (2488.4 mbar)**	**3051SAM_ _T1, 3051SAL_ _T1 30 psi (2.1 bar)**	**3051SAM_ _T2, 3051SAL_ _T2 150 psi (10.34 bar)**	**3051SAM_ _G4, 3051SAL_ _G4 300 psi (20.7 bar)**	**3051SAM_ _T3, 3051SAL_ _T3 800 psi (55.2 bar)**
Rosemount 3051SAM(1)	0.2 inH_2O (0.5 mbar)	0.6 inH_2O (1.4 mbar)	0.9 inH_2O (2.2 mbar)	1.5 inH_2O (4.0 mbar)	6.2 inH_2O (15 mbar)	7.8 inH_2O (19 mbar)
Rosemount 3051SAL with direct mount seal types and sizes below(2): ■ FF, FC, PF ≥ 2-in./ DN50 ■ EF ≥ 3-in./DN80 ■ All RT, RF, RC, SS ■ SC ≥ 2.5-in.	2.2 inH_2O (5.5 mbar)	2.3 inH_2O (5.8 mbar)	3.0 inH_2O (7.5 mbar)	3.2 inH_2O (8.0 mbar)	6.5 inH_2O (16 mbar)	8.3 inH_2O (21 mbar)
Rosemount 3051SAL with other seal types and sizes	Consult Instrument Toolkit™ for performance.					

(1) *For Rosemount 3051SAM assembled to a Rosemount 1199 Diaphragm Seal, use Rosemount 3051SAL specification for identical seal types and sizes.*

(2) *For Rosemount 3051SAL with direct mount seals, specification applies to process temperatures from -45 to 205 °C and excludes diaphragm option code SC, 6-mil diaphragm thickness. Seal types outside these parameters will require a Toolkit calculation for performance.*

Transmitter total performance

Total performance is based on combined errors of reference accuracy, ambient temperature effect, and line pressure effect at normal operating conditions (70 percent of span typical reading, 740 psi [51 bar] line pressure). For performance of ranges not listed please contact the factory.

Models		Ultra	Classic and classic MV	Ultra for flow[1]
3051S_CD	Ranges 2–3	±0.1% of span For ±50 °F (28 °C) temperature changes; 0–100% relative humidity, from 1:1 to 5:1 rangedown	±0.14% of span For ±50 °F (28 °C) temperature changes, 0–100% relative humidity, from 1:1 to 5:1 rangedown	±0.15% of reading For ±50 °F (28 °C) temperature changes, 0-100% relative humidity, over 8:1 DP turndown from URL
3051S_CG	Ranges 2–5			
3051S_CA	Ranges 2–4			
3051S_T	Ranges 2–4			
3051SMV[2] [3]	DP Ranges 2–3			
3051SAM_ _G[4]	Ranges 2–5			
3051SAM_ _A[4]	Ranges 2–4			
3051SAM_ _T[4]	Ranges 2–4			
3051SAM_ _E[4]	Ranges 2–4			
3051SAL		Use Instrument Toolkit™ or the QZ Option to quantify the total performance of a remote seal assembly under operating conditions.		

(1) *Ultra for Flow is only available for 3051S_CD Ranges 2–3 and 3051SMV DP Ranges 2–4.*
(2) *For Rosemount 3051SMV, Transmitter Total Performance specification applies to differential pressure measurement only.*
(3) *Only applicable with static pressure range 3 and 4.*
(4) *Specifications are for each gauge/absolute pressure sensor of the ERS system and are not reflective of the DP calculation.*

Multivariable flow performance

Note

Flow performance specifications assume device is configured for full compensation of static pressure, process temperature, density, viscosity, gas expansion, discharge coefficient, and thermal correction variances over the specified process operating range using multivariable type M or flow meter measurement types 1 through 4.

Mass, Energy, Actual Volumetric, and Totalized Flow Reference Accuracy[1]		
Models	**Ultra for flow**	**Classic MV[2]**
3051SMV[3]		
DP Ranges 2–3[4]	±0.65% of flow rate over a 14:1 flow range (200:1 DP range)	±0.70% of flow rate over 8:1 flow range (64:1 DP range)
DP Range 1	N/A	±0.90% of flow rate over 8:1 flow range (64:1 DP range)
Annubar flow meter (3051SFA)		
Ranges 2–3	±0.80% of flow rate at 14:1 flow turndown	±1.15% of flow rate at 8:1 flow turndown
Compact Annubar flow meter (3051SFC_A)		
Ranges 2–3		
Standard	±1.55% of flow rate at 14:1 flow turndown	±1.60% of flow rate at 8:1 flow turndown
Calibrated	±0.80% of flow rate at 14:1 flow turndown	±1.00% of flow rate at 8:1 flow turndown

Mass, Energy, Actual Volumetric, and Totalized Flow Reference Accuracy[1]		
Models	**Ultra for flow**	**Classic MV[2]**
Compact Conditioning Orifice flow meter (3051SFC_C)		
Ranges 2–3		
β = 0.4	±0.75% of flow rate at 14:1 flow turndown	±1.10% of flow rate at 8:1 flow turndown
β = 0.50, 0.65	±1.15% of flow rate at 14:1 flow turndown	±1.45% of flow rate at 8:1 flow turndown
Compact Orifice flow meter(3051SFC_P)[5]		
Ranges 2-3		
β = 0.4	±1.30% of flow rate at 14:1 flow turndown	±1.45% of flow rate at 8:1 flow turndown
β = 0.50, 0.65	±1.30% of flow rate at 14:1 flow turndown	±1.45% of flow rate at 8:1 flow turndown
Integral Orifice flow meter (3051SFP)		
Ranges 2–3		
Bore < 0.160	±2.55% of flow rate at 14:1 flow turndown	±2.65% of flow rate at 8:1 flow turndown
0.160 ≤ Bore < 0.500	±1.55% of flow rate at 14:1 flow turndown	±1.70% of flow rate at 8:1 flow turndown
0.500 ≤ Bore ≤ 1.000	±1.05% of flow rate at 14:1 flow turndown	±1.25% of flow rate at 8:1 flow turndown
1.000 < Bore	±1.55% of flow rate at 14:1 flow turndown	±1.70% of flow rate at 8:1 flow turndown

(1) *Energy, actual volumetric, and totalized flow not available with transmitter output code F.*
(2) *Differential pressure calibrated at up to 1/10th full scale for optimum flow accuracy/rangeability.*
(3) *Uncalibrated differential producer (0.2 < beta < 0.6 Orifice) installed per ASME MFC 3M or ISO 5167-1. Uncertainties for discharge coefficient, producer bore, tube diameter, and gas expansion factor as defined in ASME MFC 3M or ISO 5167-1. Reference accuracy does not include RTD sensor accuracy.*
(4) *Only applies to static pressure range 3 and 4. For static pressure range 5, contact the factory.*
(5) *For line sizes less than 2-in. (50mm) or greater than 8-in. (200 mm), see the Rosemount DP Flow Meters and Primary Elements Product Data Sheet.*

Uncompensated Flow performance

Note
For measurement types 5–7, refer to the reference accuracy specification for the Rosemount 3051SMV with measurement type P.

NOTICE
These flow measurement accuracies assume a constant density, viscosity, and expansibility factor.

NOTICE
Range 1 flow meters experience an additional uncertainty up to 0.9%. Consult your Emerson representative for exact specifications.

Table 6: Flow Meter Performance Specifications

Flow performance specifications assume the device only uses differential pressure (DP) readings without pressure and temperature compensation.

Models	Ultra	Classic	Ultra-For-Flow
Annubar™ flow meter Rosemount 3051SFA			
Ranges 2–3	±0.95% of flow rate at 8:1 flow turndown	±1.25% of flow rate at 8:1 flow turndown	±0.80% of flow rate at 14:1 flow turndown
Compact annubar flow meter (3051SFC_A)			
Ranges 2–3			
Standard	±1.65% of flow rate at 8:1 flow turndown	±1.70% of flow rate at 8:1 flow turndown	±1.55% of flow rate at 14:1 flow turndown
Calibrated	±0.95% of flow rate at 8:1 flow turndown	±1.25% of flow rate at 8:1 flow turndown	±0.80% of flow rate at 14:1 flow turndown
Compact conditioning orifice flow meter 3051SFC_C			
Ranges 2–3			
β = 0.4	±0.90% of flow rate at 8:1 flow turndown	±1.10% of flow rate at 8:1 flow turndown	±0.75% of flow rate at 14:1 flow turndown
β = 0.50, 0.65	±1.25% of flow rate at 8:1 flow turndown	±1.40% of flow rate at 8:1 flow turndown	±1.15% of flow rate at 14:1 flow turndown
Compact orifice flow meter 3051SFC_P (1)			
Ranges 2–3	±1.35% of flow rate at 8:1 flow turndown	±1.80% of flow rate at 8:1 flow turndown	±1.30% of flow rate at 14:1 flow turndown
Integral orifice flow meter (3051SFP)			
Ranges 2–3			
Bore < 0.160	±2.65% of flow rate at 8:1 flow turndown	±2.70% of flow rate at 8:1 flow turndown	±2.60% of flow rate at 14:1 flow turndown
0.160 ≤ Bore < 0.500	±1.70% of flow rate at 8:1 flow turndown	±1.80% of flow rate at 8:1 flow turndown	±1.60% of flow rate at 14:1 flow turndown
0.500 ≤ Bore ≤ 1.000	±1.25% of flow rate at 8:1 flow turndown	±1.35% of flow rate at 8:1 flow turndown	±1.15% of flow rate at 14:1 flow turndown
1.000 < Bore	±1.70% of flow rate at 8:1 flow turndown	±1.80% of flow rate at 8:1 flow turndown	±1.60% of flow rate at 14:1 flow turndown

(1) *For line sizes less than 2 in. (50 mm) or greater than 8 in. (200 mm), add an additional 5 percent uncertainty.*

Long term stability

Table 7: Pressure

Models		Ultra, Enhanced, and Ultra for flow(1)	Classic and Classic MV
3051S_CD	Ranges 2–5	±0.15% of URL for 15 years; for ±50 °F (28 °C) temperature changes, up to 1000 psi (68.95 bar) line pressure	±0.20% of URL for 15 years; for ±50 °F (28 °C) temperature changes, up to 1000 psi (68.95 bar) line pressure
3051S_CG	Ranges 2–5		
3051S_CA	Ranges 1–4		
3051S_T	Ranges 1–5		
3051SAM_ _G(2)	Ranges 2–5		
3051SAM_ _A(2)	Ranges 1–4		
3051SAM_ _T(2)	Ranges 1–5		
3051SAM_ _E(2)	Ranges 1–5		
3051SMV_ _3,4	Ranges 2–5		
3051SF_ _D,3,4	Ranges 2–5		

Table 7: Pressure *(continued)*

Models		Ultra, Enhanced, and Ultra for flow[1]	Classic and Classic MV
3051SMV_ _1,2	DP Ranges 2–5	±0.15% of URL for 15 years; for ±50 °F (28 °C) temperature changes, up to 1000 psi (68.95 bar) line pressure	±0.20% of URL for 15 years; for ±50 °F (28 °C) temperature changes, up to 1000 psi (68.95 bar) line pressure
3051SF_1,2	AP and GP Ranges 3–4		

(1) *Ultra is only available for Rosemount 3051S, 3051SMV_ _3 and 4, 3051SF_3, 4, 7, and D. Ultra for Flow is only available on 3051S_CD ranges 2–3, 3051SMV DP ranges 2–4, and 3051SF DP ranges 2–3.*
(2) *Specifications are for each gauge/absolute pressure sensor of the ERS system and are not reflective of the DP calculation.*

Table 8: Process Temperature

Specifications for process temperature are for the transmitter portion only. The transmitter is compatible with any Pt 100 (100 ohm platinum) RTD. Examples of compatible RTDs include the Rosemount Series 214C RTD Temperature Sensors.

Models		
3051SMV 3051SF	RTD Interface	The greater of ±0.185 °F (0.103 °C) or 0.1% of reading per 5 years (excludes RTD sensor stability).

Warranty

Note
Warranty details can be found in Emerson Terms and Conditions of Sale.

Models	Ultra, Enhanced, and Ultra for flow[1]	Classic and Classic MV[2]	Optional extended warranty[3]
All Rosemount 3051S Products	15-year limited warranty	1-year limited warranty	WR3: 3-year limited warranty WR5: 5-year limited warranty

(1) *Rosemount Ultra and Ultra for Flow transmitters have a limited warranty of 15 years from date of shipment. All other provisions of Emerson standard limited warranty remain the same.*
(2) *Goods are warranted for 12 months from the date of initial installation or 18 months from the date of shipment by seller, whichever period expires first.*
(3) *Rosemount extended warranties have a limited warranty of three or five years from date of shipment.*

Dynamic performance

Table 9: Total Time Response at 75 °F (24 °C), Includes Dead Time

For FOUNDATION™ Fieldbus (output code F), add 52 ms to stated values (not including segment macro-cycle). For option code DA2, add 45 ms (nominal) to stated values.

Consult Instrument Toolkit™ for transmitter configurations with remote seals including Rosemount 3051SAL.

3051S_C 3051SF_D	3051S_T	3051SMV_ _1 or 2 3051SF_1, 2, 5, or 6	3051SMV_ _3 or 4 3051SF_3, 4, or 7	ERS System (3051SAM)
DP Ranges 2–5: 100 ms Range 1: 255 ms Range 0: 700 ms	100 ms	DP Range 1: 310 ms DP Range 2: 170 ms DP Range 3: 155 ms AP and GP: 240 ms	DP Ranges 2–5: 145 ms DP Range 1: 300 ms DP Range 0: 745 ms	360 ms

Table 10: Dead Time

For option code DA2, dead time is 90 milliseconds (nominal).

3051S_C 3051S_T 3051SF_D 3051SAL_C	3051SMV 3051SF_1-7	ERS System (includes 3051SAM, 3051SAL_P, and 3051SAL_S models)
45 ms (nominal)	DP: 100 ms AP and GP: 140 ms RTD Interface: 1 s	220 ms

Table 11: Sensor Update Rate

Does not apply to Wireless (output code X). See IEC 62591 (Wireless HART® protocol) for wireless update rate.

3051S_C or T 3051SF_D 3051SAL_C	3051SMV 3051SF_1-7		ERS System (includes 3051SAM, 3051SAL_P, and 3051SAL_S models)
22 updates per second	DP: 22 updates per sec. AP and GP: 11 updates per second RTD Interface: 1 update per second	Calculated variables(1): Mass/volumetric flow rate: 22 updates per second Energy flow rate: 22 updates per second Totalized flow: 1 update per second	11 updates per second

(1) *Energy, Volumetric, and Totalized flow not available with transmitter output code F.*

Ambient temperature effect

Table 12: Transmitter with Coplanar Sensor Module (Single Variable)

Differential Pressure: (3051S_CD, 3051SMV_ _3 or 4) **Gauge Pressure: (3051S_CG, 3051SAM_ _G(1))**			
	Ultra **per 50 °F (28 °C)**	**Classic** **per 50 °F (28 °C)**	**Ultra for flow(2)** **–40 to 185 °F (–40 to 85 °C)**
Ranges 2–5(3)	±(0.009% URL + 0.025% span) from 1:1 to 10:1; ±(0.018% URL + 0.08% span) from >10:1 to 200:1	±(0.0125% URL +0.0625% span) from 1:1 to 5:1; ±(0.025% URL + 0.125% span) from >5:1 to 150:1	±0.13% of reading up to 8:1 DP turndown from URL; ±(0.0187% URL + 0.13% reading) > 8:1 and ≤ 100:1 DP turndown from URL
Range 0	±(0.25% URL + 0.05% span) from 1:1 to 30:1	±(0.25% URL + 0.05% span) from 1:1 to 30:1	N/A
Range 1	±(0.1% URL + 0.25% span) from 1:1 to 50:1	±(0.1% URL + 0.25% span) from 1:1 to 50:1	N/A
Absolute Pressure: (3051S_CA, 3051SAM_ _A(1))			
	Ultra **per 50 °F (28 °C)**	**Classic** **per 50 °F (28 °C)**	
Ranges 2–4	±(0.0125% URL + 0.0625% span) from 1:1 to 5:1; ±(0.025% URL + 0.125% span) from >5:1 to 200:1	±(0.0125% URL + 0.0625% span) from 1:1 to 5:1; ±(0.025% URL + 0.125% span) from >5:1 to 150:1	
Range 0	±(0.1% URL + 0.25% span) from 1:1 to 30:1	±(0.1% URL + 0.25% span) from 1:1 to 30:1	

Table 12: Transmitter with Coplanar Sensor Module (Single Variable) *(continued)*

Range 1	±(0.0125% URL + 0.0625% span) from 1:1 to 5:1; ±(0.025% URL + 0.125% span) from >5:1 to 100:1	±(0.0125% URL + 0.0625% span) from 1:1 to 5:1; ±(0.025% URL + 0.125% span) from >5:1 to 100:1

(1) *Specifications are for each gauge/absolute pressure sensor of the ERS system and are not reflective of the DP calculation.*
(2) *Ultra for Flow is only available for Rosemount 3051S_CD Ranges 2–3 and 3051SMV DP Ranges 2–3.*
(3) *Use Classic specification for Rosemount 3051SMV DP Range 5 Ultra and 3051S_CD Range 5 Ultra.*

Table 13: Ambient Temperature Effect for Transmitter with In-line Sensor Module

Absolute Pressure: (3051S_TA, 3051SAM_ _E(1)) Gauge Pressure: (3051S_TG, 3051SAM_ _T(1))		
	Ultra per 50 °F (28 °C)	**Classic per 50 °F (28 °C)**
Ranges 2–4	±(0.009% URL + 0.025% span) from 1:1 to 10:1; ±(0.018% URL + 0.08% span) from >10:1 to 200:1	±(0.0125% URL + 0.0625% span) from 1:1 to 5:1; ±(0.025% URL + 0.125% span) from >5:1 to 150:1
Range 5	±(0.05% URL + 0.075% span) from 1:1 to 10:1	±(0.05% URL + 0.075% span) from 1:1 to 5:1
Range 1	±(0.0125% URL + 0.0625% span) from 1:1 to 5:1; ±(0.025% URL + 0.125% span) from >5:1 to 100:1	±(0.0125% URL + 0.0625% span) from 1:1 to 5:1; ±(0.025% URL + 0.125% span) from >5:1 to 100:1

(1) *Specifications are for each gauge/absolute pressure sensor of the ERS system and are not reflective of the DP calculation.*

Table 14: Ambient Temperature Effect for Transmitter with Multivariable Sensor Module

Differential Pressure and Static Pressure (3051SMV_ _1 or 2)		
Models	**Ultra for flow –40 to 185 °F (–40 to 85 °C)(1).**	**Classic MV Per 50 °F (28 °C)**
DP Ranges 2–3(2)	±0.13 reading up to 8:1 DP turndown from URL; ±(0.13 + 0.0187[URL/Reading])% reading to 100:1 DP turndown from URL	±(0.0125% URL + 0.0625% span) from 1:1 to 5:1; ±(0.025% URL + 0.125% span) for >5:1 to 100:1
DP Range 2, SP Range 5	±0.35% of reading less than or equal to 5:1 ±[0.35 + 0.050 (URL/RDG)]% of reading greater than 5:1	±(0.025% URL + 0.100% span) from 1:1 to 5:1 ±(0.025% URL + 0.125% span) from 5:1 to 100:1
DP Range 3, SP Range 5	±0.25% of reading less than or equal to 5:1 ±[0.25 + 0.045 (URL/RDG)]% of reading greater than 5:1	±(0.025% URL + 0.0750% span) from 1:1 to 5:1 ±(0.025% URL + 0.125% span) from 5:1 to 100:1
DP Range 4	±0.130% of reading less than or equal to 3:1 ±(0.050 + 0.065 [URL/RDG])% of reading greater than 3:1	±(0.025% URL + 0.125% span) from 1:1 to 30:1 ±(0.035% URL + 0.125% span) from 30:1 to 100:1
DP Range 5	N/A	±(0.025% URL + 0.125% span) from 1:1 to 30:1 ±(0.035% URL + 0.125% span) from 30:1 to 100:1
DP Range 1	N/A	±(0.1% URL + 0.25% span) from 1:1 to 50:1
AP and GP	±(0.009% URL + 0.025% span) from 1:1 to 10:1; ±(0.018% URL + 0.08% span) for >10:1(3)	±(0.0125% URL + 0.0625% span) from 1:1 to 10:1; ±(0.025% URL + 0.125% span) for >10:1 to 100:1

(1) *Temperature limit for 3051SMV with static pressure range 5 is –20 to 185 °F (–29 to 85 °C)*
(2) *Only applies to SP ranges 3 and 4.*
(3) *For DP range 4 or 5, Ultra for Flow ambient temperature effect on static pressure is ±(0.0125% URL + 0.0625% Span) from 1:1 to 10:1; ±(0.025% URL + 0.125% Span) for >10:1.*

Table 15: Ambient temperature effect for Liquid Level Transmitter

Rosemount 3051SAL	
Ultra	**Classic**
See Instrument Toolkit™.	

Process temperature RTD interface

Table 16: Process Temperature (3051SMV_ _1 or 3)

Note
Lower process temperature limit for Rosemount 3051SMV static pressure range 5 is –20 °F (–28 °C).

Specifications for process temperature are for the transmitter portion only. The transmitter is compatible with any Pt 100 (100 ohm platinum) RTD. Examples of compatible RTDs include Rosemount series 214C RTD Temperature Sensors.

Classic MV Per 50 °F (28 °C)	Ultra for flow –40 to 185 °F (–40 to 85 °C)
±0.39 °F (0.216 °C) per 50 °F (28 °C)	±0.39 °F (0.216 °C) per 50 °F (28 °C)

Line pressure effect

Note
The line pressure effect specifications also apply to option code P9, where applicable.

Table 17: Line Pressure Effect

3051S_CD 3051SMV (DP measurement only)(1)	Ultra and Ultra-For-Flow	Classic and classic MV
Zero error(2)		
Range 2–3(3)	± 0.025% upper range limit (URL) per 1,000 psi (68.95 bar)	± 0.05% URL per 1,000 psi (68.95 bar)
DP range 2, SP range 5	± 0.075% of reading per 1,000 psi (68.95 bar)	± 0.1% of reading per 1,000 psi (68.95 bar)
DP range 3, SP range 5	± 0.025% URL per 1,000 psi (68.95 bar)	± 0.05% URL per 1,000 psi (68.95 bar)
Range 0	± 0.125% URL per 100 psi (6.89 bar)	± 0.125% URL per 100 psi (6.89 bar)
Range 1	± 0.25% URL per 1,000 psi (68.95 bar)	± 0.25% URL per 1,000 psi (68.95 bar)
Span error(4)		
Range 2–3(3)	± 0.1% of reading per 1,000 psi (68.95 bar)	± 0.1% of reading per 1,000 psi (68.95 bar)
DP range 2, SP range 5	± 0.2% of reading per 1,000 psi (68.95 bar)	± 0.2% of reading per 1,000 psi (68.95 bar
DP range 3, SP range 5	± 0.1% of reading per 1,000 psi (68.95 bar)	± 0.1% of reading per 1,000 psi (68.95 bar)
Range 0	± 0.15% of reading per 100 psi (6.89 bar)	± 0.15% of reading per 100 psi (6.89 bar)
Range 1	± 0.40% of reading per 1,000 psi (68.95 bar)	± 0.40% of reading per 1,000 psi (68.95 bar)

(1) *Lower process temperature limit for Rosemount 3051SMV static pressure range 5 is –20 °F (–28 °C).*
(2) *Zero error can be removed by performing a zero trim at line pressure.*
(3) *Only available with SP ranges 3 and 4.*
(4) *Specifications for option code P0 are two times those shown above.*

Mounting position effects

Models		Ultra, Ultra for flow, Classic and Classic MV
3051S_CD or CG 3051SMV_ _ 3 or 4 3051SF_3, 4, 7, or D 3051SAM_ _G		Zero shifts up to ±1.25 inH_2O (3.11 mbar), which can be zeroed span: no effect
3051S_CA 3051S_T 3051SAM_ _A, T, or E		Zero shifts to ±2.5 inH_2O (6.22 mbar), which can be zeroed span: no effect
3051SMV_ _ 1 or 2 3051SF_1, 2, 5, or 6	DP Sensor	Zero shifts up to ±1.25 inH_2O (3.11 mbar), which can be zeroed span: no effect

Models		Ultra, Ultra for flow, Classic and Classic MV
	GP/AP Sensor	Zero shifts to ±2.5 inH_2O (6.22 mbar), which can be zeroed span: no effect
3051SAL		With liquid level diaphragm in vertical plane, zero shift of up to ±1 inH_2O (2.49 mbar). With diaphragm in vertical plane, zero shift of up to ±5 inH_2O (12.43 mbar) plus extension length on extended units. All zero shifts can be zeroed. Span: no effect

Vibration effect

Less than ±0.1 percent of URL when tested per the requirements of IEC60770-1 field or pipeline with high vibration level (10–60 Hz 0.21 mm displacement peak amplitude/60–2000 Hz 3g).

For housing style codes 1J, 1K, 1L, 2J, and 2M: Less than ±0.1 percent of URL when tested per the requirements of IEC60770-1 field with general application or pipeline with low vibration level (10–60 Hz 0.15 mm displacement peak amplitude/60–500 Hz 2g).

Power supply effect

Less than ±0.005 percent of calibrated span per volt change in voltage at the transmitter terminals.

Electromagnetic compatibility

Meets all industrial environment requirements of EN61326 and NAMUR NE-21. Maximum deviation <1 % span during EMC disturbance.

Note
NAMUR NE-21 does not apply to Wireless (transmitter output code X).

Note
During surge event, device with 4-20 mA (transmitter output option code A) may exceed maximum EMC deviation limit reset. Within the specified start-up time, device self-recovers and return to normal operation.

Transient protection (option T1)

Tested in accordance with the Institute of Electrical and Electronics Engineers (IEEE) C62.41.2-2002, Location Category B

- 6 kV crest, 100 kHz (0.5 µs)
- 3 kA crest (8 × 20 µs)
- 6 kV crest (1.2 × 50 µs)

Europe

Certificate: Baseefa18ATEX0144X

Standards: EN IEC 60079-0:2018, EN60079-11:2012

Markings: Ex II (1) G, [Ex ia Ga] IIC, T_{amb} = –50 °C to +75 °C

Special Conditions: The CC21 Commissioning Cable must only be used in a non-hazardous area – it provides an interface between unspecified non-hazardous area equipment and a Mesh sensor. It must not be used to provide power whilst located in a hazardous area.

Functional specifications

Range and sensor limits

Table 18: Transmitter with Coplanar Sensor Module (Single Variable)

Range	DP sensor[1] (3051S_CD, 3051SMV_ _3, 4, or D 3051SF_3, 4, or 7, 3051SAL_CD)		GP sensor (3051S_CG, 3051SAM_ _G, 3051SAL_ _G)		AP sensor[2] (3051S_CA, 3051SAM_ _A, 3051SAL_ _A)	
	Lower (LRL)[3]	Upper (URL)	Lower (LRL)[4]	Upper (URL)	Lower (LRL)	Upper (URL)
0	–3.00 inH_2O (–7.46 mbar)	3.00 inH_2O (7.46 mbar)	N/A	N/A	0 psia (0 bar)	5.00 psia (0.34 bar)
1	–25.00 inH_2O (–62.16 mbar)	25.00 inH_2O (62.16 mbar)	–25.00 inH_2O (–62.16 mbar)	25.00 inH_2O (62.16 mbar)	0 psia (0 bar)	30.00 psia (2.07 bar)
2	–250.00 inH_2O (–621.60 mbar)	250.00 inH_2O (621.60 mbar)	–250.00 inH_2O (–621.60 mbar)	250.00 inH_2O (621.60 mbar)	0 psia (0 bar)	150.00 psia (10.34 bar)
3	–1000.00 inH_2O (–2.49 bar)	1000.00 inH_2O (2.49 bar)	0.5 psia (34.47 mbar)	1000.00 inH_2O (2.49 bar)	0 psia (0 bar)	800.00 psia (55.16 bar)
4	–300.00 psi (–20.68 bar)	300.00 psi (20.68 bar)	0.5 psia (34.47 mbar)	300.00 psi (20.68 bar)	0 psia (0 bar)	4000.00 psia (275.79 bar)
5	–2000.00 psi (–137.90 bar)	2000.00 psi (137.90 bar)	0.5 psia (34.47 mbar)	2000.00 psi (137.90 bar)	N/A	N/A

(1) *Rosemount 3051SF Flow Meters only available with ranges 1, 2, and 3.*
(2) *Range 0 is not available for 3051SAL_ _A.*
(3) *The Lower Range Limit (LRL) is 0 inH_2O (0 mbar) for Ultra for Flow Performance Class and Rosemount 3051SF Flow Meters.*
(4) *Assumes atmospheric pressure of 14.7 psia (1 bar).*

Table 19: Transmitter with In-Line Sensor Module

Range	GP sensor (3051S_TG, 3051SAM_ _T, 3051SAL_ _T)		AP sensor (3051S_TA, 3051SAM_ _E, 3051SAL_ _E)	
	Lower (LRL)[1]	Upper (URL)	Lower (LRL)	Upper (URL)
1	–14.70 psig (–1.01 bar)	30.00 psig (2.07 bar)	0 psia (0 bar)	30.00 psia (2.07 bar)
2	–14.70 psig (–1.01 bar)	150.00 psig (10.34 bar)	0 psia (0 bar)	150.00 psia (10.34 bar)
3	–14.70 psig (–1.01 bar)	800.00 psig (55.16 bar)	0 psia (0 bar)	800.00psia (55.16 bar)
4	–14.70 psig (–1.01 bar)	4000.00 psig (275.79 bar)	0 psia (0 bar)	4000.00 psia (275.79 bar)
5	–14.70 psig (–1.01 bar)	10,000.00 psig (689.48 bar)	0 psia (0 bar)	10,000.00 psia (689.48 bar)

(1) *Assumes atmospheric pressure of 14.7 psia (1 bar-a).*

Table 20: Transmitter with Multivariable Sensor Module (3051SMV_ _1, 3051SMV_ _2, 3051SF_1, 3051SF_2, 3051SF_5, and 3051SF_6)

Range	DP sensor	
	Lower (LRL)[1]	Upper (URL)
1	–25.00 inH_2O (–62.30 mbar)	25.00 inH_2O (62.30 mbar)
2	–250.00 inH_2O (–0.62 bar)	250.00 inH_2O (0.62 bar)

Table 20: Transmitter with Multivariable Sensor Module (3051SMV_ _1, 3051SMV_ _2, 3051SF_1, 3051SF_2, 3051SF_5, and 3051SF_6) *(continued)*

Range	DP sensor	
	Lower (LRL)[1]	Upper (URL)
3	–1000.00 inH_2O (–2.49 bar)	1000.00 inH_2O (2.49 bar)
4	–150.00 psi (–10.30 bar)	150.00 psi (10.30 bar)
5	–2000.00 psi (–137.90 bar)	2000.00 psi (137.90 bar)

(1) *Lower (LRL) is 0 inH_2O (0 mbar) for Ultra for Flow and Rosemount 3051SF_ flow meters.*

Table 21: Static Pressure Sensor (GP/AP)

Range	Lower (LRL)	Upper (URL)[1]
3	GP[2][3]: –14.20 psig (–0.98 bar) AP: 0.50 psia (34.5 mbar)	GP: 800 psig (55.16 bar) AP: 800 psia (55.16 bar)
4	GP[2][3]: –14.20 psig (–0.98 bar) AP: 0.50 psia (34.5 mbar)	GP: 3626 psig (250.0 bar) AP: 3626 psia (250.0 bar)
5	GP[2][3][4]: –14.20 psig (–0.98 bar)	GP[5]: 6,092 psi (420 bar)

(1) *For SP Range 4 with DP Range 1, the URL is 2000 psi (137.9 bar).*
(2) *Inert fill: minimum pressure = 1.5 psia (0.10 bar) or –13.2 psig (–0.91 bar).*
(3) *Assumes atmospheric pressure of 14.7 psia (1 bar-a).*
(4) *Static pressure range 5 is a sealed gauge sensor.*
(5) *For temperature range –40 to –20 °F URL is 4,500 PSI (310.26 bar), for temperature range –20 to 185 °F URL is 6,092 PSI (420 bar).*

Table 22: Process Temperature RTD Interface (3051SMV_ _1 or 3, 3051SF_1, 3, 5 or 7)

Transmitter is compatible with any Pt 100 RTD sensor. Examples of compatible RTDs include Rosemount Series 214C RTD Temperature Sensors.

Lower (LRL)	Upper (URL)
–328 °F (–200 °C)	1562 °F (850 °C)

Minimum span limits

Table 23: Transmitter with Coplanar Sensor Module (Single Variable)

Range	DP sensor[1] (3051S_CD, 3051SMV_ _3 or 4, 3051SF_D, 3, 4 or 7, 3051SAL_ _CD[2])		GP sensor (3051S_CG, 3051SAM_ _G[3], 3051SAL_ _G[2][3])		AP sensor (3051S_CA, 3051SAM_ _A[3], 3051SAL_ _A [2][3])	
	Ultra and Ultra for Flow	Classic	Ultra	Classic	Ultra	Classic
0	0.10 inH_2O (0.25 mbar)	0.10 inH_2O (0.25 mbar)	N/A	N/A	0.167 psia (11.49 mbar)	0.167 psia (11.49 mbar)
1	0.50 inH_2O (1.24 mbar)	0.50 inH_2O (1.24 mbar)	0.50 inH_2O (1.24 mbar)	0.50 inH_2O (1.24 mbar)	0.30 psia (20.68 mbar)	0.30 psia (20.68 mbar)
2	1.25 inH_2O (3.11 mbar)	1.67 inH_2O (4.14 mbar)	1.25 inH_2O (3.11 mbar)	1.67 inH_2O (4.14 mbar)	0.75 psia (51.71 mbar)	1.00 psia (68.95 mbar)
3	5.0 inH_2O (12.44 mbar)	6.67 inH_2O (16.58 mbar)	5.0 inH_2O (12.44 mbar)	6.67 inH_2O (16.58 mbar)	4.00 psia (275.79 mbar)	5.33 psia (367.72 mbar)
4	1.50 psi (103.42 mbar)	2.00 psi (137.90 mbar)	1.50 psig (103.42 mbar)	2.00 psig (137.90 mbar)	20.00 psia (1.38 bar)	26.67 psia (1.84 bar)

Table 23: Transmitter with Coplanar Sensor Module (Single Variable) *(continued)*

Range	DP sensor[1] (3051S_CD, 3051SMV_ _3 or 4, 3051SF_D, 3, 4 or 7, 3051SAL_ _CD[2])		GP sensor (3051S_CG, 3051SAM_ _G[3], 3051SAL_ _G[2][3])		AP sensor (3051S_CA, 3051SAM_ _A[3], 3051SAL_ _A [2][3])	
	Ultra and Ultra for Flow	Classic	Ultra	Classic	Ultra	Classic
5	10.00 psi (689.48 mbar)	13.33 psi (919.30 mbar)	10.00 psig (689.48 mbar)	13.33 psig (919.30 mbar)	N/A	N/A

(1) *Rosemount 3051SF flow meters only available with ranges 1, 2, and 3.*
(2) *For Rosemount 3051SAL models, use Classic minimum span limits.*
(3) *Specifications are for each gauge/absolute pressure sensor of the ERS system and are not reflective of the DP calculation.*

Table 24: Transmitter with In-Line Sensor Module

Range	GP sensor (3051S_TG, 3051SAM_ _T[1], 3051SAL_ _T[2])		AP sensor (3051S_TA, 3051SAM_ _E[1], 3051SAL_ _E[2])	
	Ultra	Classic	Ultra	Classic
1	0.30 psig (20.68 mbar)	0.30 psig (20.68 mbar)	0.30 psia (20.68 mbar)	0.30 psia (20.68 mbar)
2	0.75 psig (51.71 mbar)	1.00 psig (68.95 mbar)	0.75 psia (51.71 mbar)	1.00 psia (68.95 mbar)
3	4.00 psig (275.79 mbar)	5.33 psig (367.72 mbar)	4.00 psia (275.79 mbar)	5.33 psia (367.72 mbar)
4	20.00 psig (1.38 bar)	26.67 psig (1.84 bar)	20.00 psia (1.38 bar)	26.67 psia (1.84 bar)
5	1,000.00 psig (68.95 bar)	2,000.00 psig (137.90 bar)	1,000.00 psia (68.95 bar)	2,000.00 psia (137.90 bar)

(1) *Specifications are for each gauge/absolute pressure sensor of the ERS system and are not reflective of the DP calculation.*
(2) *For Rosemount 3051SAL models, use classic minimum span limits.*

Table 25: Transmitter with Multivariable Sensor Module (3051SMV_ _1 or 2, 3051SF_1, 2, 5, or 6)

Range	DP sensor	
	Ultra for Flow	Classic MV
1	N/A	0.5 inH_2O (1.24 mbar)
2	1.3 inH_2O (3.23 mbar)	2.5 inH_2O (6.22 mbar)
3	5.0 inH_2O (12.43 mbar)	10.0 inH_2O (24.86 mbar)
4	1.5 psi (103.42 mbar)	3.0 psi (206.84 mbar)
5	N/A	20.0 psi (1.38 bar)
Range	**Static pressure sensor (GP/AP)**	
	Ultra for Flow	**Classic MV**
3	4.0 psi (275.79 mbar)	8.0 psi (551.58 mbar)
4	18.13 psi (1.25 bar)	36.26 psi (2.50 bar)
5	1000 psi (68.95 bar)	2000 psi (137.90 bar)

Process temperature RTD interface (3051SMV_ _1 or 3, 3051SF_1, 3, 5 or 7)

Minimum span = 50 °F (28 °C)

DP span considerations for ERS applications

It is recommended that the DP rangedown (operating pressure/DP span) for ERS applications not exceed 100:1. Consult with Emerson sales representative when considering a Rosemount 3051S ERS System for applications beyond 100:1 rangedown.

Service

Rosemount 3051S, 3051SMV_P, 3051SAM, and 3051SF_5, 6, 7, or D (Direct Process Variable Output)

Liquid, gas, and vapor applications

Rosemount 3051SAL

Liquid level applications

Rosemount 3051SMV_M and 3051SF_1, 2, 3, or 4 (Mass and Energy Flow Output)

Note
For option code A: 4-20mA HART® only.

Some fluid types are only supported by certain measurement types.

Table 26: Fluid Compatibility with Pressure and Temperature Compensation

• Available — Not available

Code		Fluid types			
	Measurement type	Liquids	Saturated steam	Superheated steam	Gas and natural gas
1	DP/P/T (full compensation)	•	•	•	•
2	DP/P	•	•	•	•
3	DP/T	•	•	—	—
4	DP only	•	•	—	—

4–20 mA HART® protocol

Zero and span adjustment

Zero and span values can be set anywhere within the range. Span must be greater than or equal to the minimum span.

Output

The 2-wire 4–20 mA is user-selectable for linear or square root output. Digital process variable superimposed on 4–20 mA signal is available to any host that conforms to the HART® protocol.

Power supply

External power supply required.

- Rosemount 3051S and 3051SF_D: 10.5 to 42.4 Vdc with no load
- Rosemount 3051S and 3051SF_D with Advanced HART Diagnostics Suite: 12 to 42.4 Vdc with no load
- Rosemount 3051SMV and 3051SF_1-7: 12 to 42.4 Vdc with no load
- Rosemount 3051S ERS System: 16.0 to 42.4 Vdc with no load

Load limitations

Maximum loop resistance is determined by the voltage level of the external power supply, as described by:

Figure 3: Rosemount 3051S and 3051SF_D

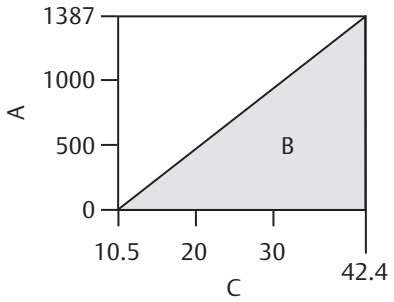

Maximum Loop Resistance = 43.5 × (Power Supply Voltage – 10.5)

The Field Communicator requires a minimum loop resistance of 250 Ω for communication.

A. Load (ohms)
B. Operating region
C. Voltage (Vdc)

Figure 4: Rosemount 3051SMV and 3051SF_1-7, 3051S and 3051SF_D with HART® Diagnostics (option code DA2)

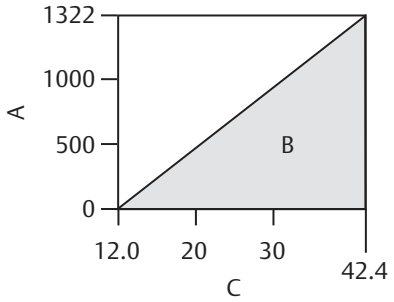

Maximum Loop Resistance = 43.5 × (Power Supply Voltage – 12.0)

The Field Communicator requires a minimum loop resistance of 250 Ω for communication.

A. Load (ohms)
B. Operating region
C. Voltage (Vdc)

Figure 5: Rosemount 3051S ERS System

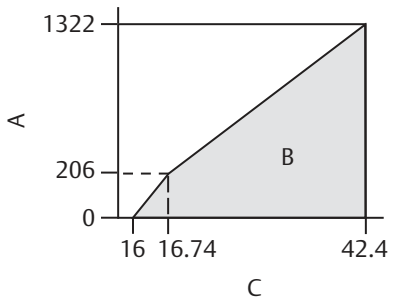

If supply voltage ≤ 16.74 Vdc: Maximum Loop Resistance = 277 x (Power Supply Voltage – 16.0) If supply voltage > 16.74 Vdc: Maximum Loop Resistance = 43.5 x (Power Supply Voltage – 12.0)

The Field Communicator requires a minimum loop resistance of 250 Ω for communication.

A. Load (ohms)
B. Operating region
C. Voltage (Vdc)

Selectable HART revisions (option code HR7)

The 2-wire 4–20 mA is user-selectable for linear or square root output. Digital process variable superimposed on 4–20 mA signal is available to any host that conforms to HART protocol. The Rosemount 3051S with Advanced HART Diagnostics (DA2) comes with Selectable HART revisions. Digital communications based on HART Revision 7 (with option code HR7 selected) or Revision 5 (default) protocol can be selected. The HART revision can be switched in the field using any HART-based configuration. See the Rosemount 3051S Reference Manual for instructions on how to switch HART revision.

Advanced HART diagnostics suite (Option Code DA2)

The Process Intelligence diagnostic provides statistical data (standard deviation, mean, coefficient of variation) that can be used to detect process and process equipment anomalies including but not limited to:

- Furnace flame instability
- Pump cavitation
- Distillation column flooding
- Fluid composition change
- Entrained air
- Agitation loss
- Process leak

This diagnostic allows you to take preventative measures before abnormal process situations result in unscheduled downtime or rework.

The Loop Integrity diagnostic pro-actively detects and notifies you of changes in the electrical loop before they affect your process operation. Example loop problems that can be detected include water in the terminal compartment, corrosion of terminals, improper grounding, and unstable power supplies.

The Plugged Impulse Line diagnostic uses the same statistical processing technology as Process Intelligence to detect plugging in impulse piping that may prevent the transmitter from obtaining an accurate process reading. It can also detect and alert you to other process connection issues, such as plugged Annubar™ or orifice plate process taps.

The Device Dashboard presents the diagnostics in a graphical, task-based interface that provides single click access to critical process/device information and descriptive graphical troubleshooting.

Suite includes:

- Process Intelligence

- Loop Integrity
- Plugged Impulse Line
- Status Log
- Variable Log
- Advanced Process Alerts
- Service Alerts
- Time Stamp capability

FOUNDATION™ Fieldbus protocol

Power supply

External power supply required; transmitters operate on 9.0–32.0 Vdc (9.0–17.5 Vdc for FISCO) transmitter terminal voltage.

Current draw

17.5 mA for all configurations (including LCD display option)

Parameters:

- Schedule entries: 22 (max.)
- Links: 25 (max.)
- Virtual Communications Relationships (VCR): 20 (max.)

Standard function blocks

Resource block	Contains hardware, electronics, and diagnostic information.
Transducer block	Contains actual sensor measurement data including the sensor diagnostics and the ability to trim the pressure sensor or recall factory defaults.
LCD display block	Configures the local display.
Analog Input blocks	Processes the measurements for input into other function blocks. The output value is in engineering or custom units and contains a status indicating measurement quality.
PID block with auto-tune	Contains all logic to perform PID control in the field including cascade and feedforward. Auto-tune capability allows for superior tuning for optimized control performance.

Backup Link Active Scheduler (LAS)

The transmitter can function as a Link Active Scheduler if the current link master device fails or is removed from the segment.

Software upgrade in the field

Software for the Rosemount 3051S with FOUNDATION Fieldbus is easy to upgrade in the field using the FOUNDATION Fieldbus Common Device Software Download procedure.

Plantweb alerts

Enable the full power of the Plantweb™ digital architecture by diagnosing instrumentation issues, communicating advisory, maintenance, and failure details, and recommending a solution.

Advanced control function block suite (option code A01)

Input selector block	Selects between inputs and generates an output using specific selection strategies such as minimum, maximum, midpoint, average, or first “good.”
Arithmetic block	Provides pre-defined application-based equations including flow with partial density compensation, electronic remote sensors, hydrostatic tank gauging, ratio control and others.

Signal characterizer block Characterizes or approximates any function that defines an input/output relationship by configuring up to twenty X, Y coordinates. The block interpolates an output value for a given input value using the curve defined by the configured coordinates.

Integrator block Compares the integrated or accumulated value from one or two variables to pre-trip and trip limits and generates discrete output signals when the limits are reached. This block is useful for calculating total flow, total mass, or volume over time.

Output splitter block Splits the output of one PID or other control block so that the PID will control two valves or other actuators.

Control selector block Selects one of up to three inputs (highest, middle, or lowest) that are normally connected to the outputs of PID or other control function blocks.

Block	Execution time
Resource	N/A
Transducer	N/A
LCD Display Block	N/A
Analog Input 1	20 milliseconds
PID with Auto-tune	35 milliseconds
Input Selector	20 milliseconds
Arithmetic	20 milliseconds
Signal Characterizer	20 milliseconds
Integrator	20 milliseconds
Output Splitter	20 milliseconds
Control Selector	20 milliseconds

FOUNDATION Fieldbus diagnostics suite (option code D01)

Note
Only applies to Rosemount 3051S with transmitter output code F.

Process Intelligence provides statistical data (standard deviation and mean) that can be used to detect process and process equipment anomalies, including:

- furnace flame instability
- pump cavitation
- distillation column flooding
- fluid composition change
- entrained air
- agitation loss
- process leak

This diagnostic allows you to take preventative measures before abnormal process situations result in unscheduled downtime or rework.

The Plugged Impulse Line diagnostic uses the same statistical processing technology as Process Intelligence to detect plugging in impulse piping that may prevent the transmitter from obtaining an accurate process reading. It can also detect and alert you to other process connection issues, such as plugged Annubar or orifice plate process taps.

The Device Dashboard presents the diagnostics in a graphical, task-based interface that provides single click access to critical process/device information and descriptive graphical troubleshooting.

Suite includes: Process Intelligence and Plugged Impulse Line diagnostics.

IEC 62591 (*Wireless* HART® protocol)

Output

IEC 62591 (*Wireless* HART), 2.4 GHz DSSS

Radio frequency power output from antenna

- External antenna (WK option): Maximum of 10 mW (10 dBm) EIRP
- Extended range, external antenna (WM option): Maximum of 18 mW (12.5 dBm) EIRP
- Remote (WJ option) antenna: Maximum of 17 mW (12.3 dBm) EIRP
- High-gain, remote antenna (WN option): Maximum of 40 mW (16 dBm) EIRP

Local display

The optional seven-digit LCD display can display user-selectable information such as primary variable in engineering units, percent of range, sensor module temperature, and electronics temperature. The display updates based on the wireless update rate.

Update rate

User selectable 1 second to 60 minutes.

Power module

Field replaceable, keyed connection eliminates the risk of incorrect installation, Intrinsically Safe Lithium-thionyl chloride Power Module with Polybutadiene Terephthalate (PBT) enclosure. Ten-year life at one minute update rate.[1][2]

Overpressure limits

Transmitters withstand the following limits without damage:

Table 27: Coplanar Sensor Module (Single Variable)

Range	DP[1] and GP	AP
	3051S_CD, 3051S_CG 3051SMV_ _3 or 4 3051SF_3, 4, 7, or D 3051SAM_ _G	**3051S_CA 3051SAM_ _A**
0	750 psi (51.71 bar)	60 psia (4.14 bar)
1	2000 psi (137.90 bar)	750 psia (51.71 bar)
2	3626 psi (250.00 bar)	1500 psia (103.42 bar)
3	3626 psi (250.00 bar)	1600 psia (110.32 bar)
4	3626 psi (250.00 bar)	6000 psia (413.69 bar)
5	3626 psi (250.00 bar)	N/A

(1) *The overpressure limit of a DP Sensor with the P9 option is 4500 psig (310.3 bar). The overpressure limit of a DP Sensor with the P0 option is 6092 psig (420 bar).*

(1) Reference conditions are 70 °F (21 °C), and routing data for three additional network devices. Note: Continuous exposure to ambient temperature limits of –40 °F or 185 °F (–40 °C or 85 °C) may reduce specified life by less than 20 percent.
(2) 6.5-year life at one minute update rates when used with 3051SMV.

Table 28: In-Line Sensor Module

Range	GP	AP
	3051S_TG **3051SAM_ _T**	**3051S_TA** **3051SAM_ _E**
1	750 psi (51.71 bar)	
2	1500 psi (103.42 bar)	
3	1600 psi (110.32 bar)	
4	6000 psi (413.69 bar)	
5	15000 psi (1034.21 bar)	

Coplanar multivariable sensor module (3051SMV_ _1 or 2, 3051SF_1, 2, 5, or 6)

DP range	Static pressure range (GP/AP)[1]		
	3	**4**	**5[2]**
1	1600 psi (110.32 bar)	2000 psi (137.90 bar)	N/A
2	1600 psi (110.32 bar)	3626 psi (250.00 bar)	3626 psi (250.00 bar) if applied to one side 6500 psi (448,16 bar) if applied to both sides
3	1600 psi (110.32 bar)	3626 psi (250.00 bar)	
4	N/A	3626 psi (250.00 bar)	
5	N/A	3626 psi (250.00 bar)	N/A

(1) *Pressure can be applied to one or both sides.*
(2) *Static pressure range 5 is a sealed gauge sensor.*

Liquid level transmitter (Rosemount 3051SAL)

Overpressure limit is dependent on the flange rating or sensor rating (whichever is lower). Use Instrument Toolkit™ to ensure the seal system meets all pressure and temperature limits.

Static pressure limits

Coplanar sensor module (single variable)

Operates within specifications between static line pressures of:

Range	DP sensor[1]
	3051S_CD **3051SMV_ _3 or 4 3051SF_3, 4, 7, or D**
0	0.5 psia to 750 psig (0.03 to 51.71 bar)
1	0.5 psia to 2000 psig (0.03 to 137.90 bar)
2	0.5 psia to 3626 psig (0.03 to 250.00 bar)
3	0.5 psia to 3626 psig (0.03 to 250.00 bar)
4	0.5 psia to 3626 psig (0.03 to 250.00 bar)
5	0.5 psia to 3626 psig (0.03 to 250.00 bar)

(1) *The static pressure limit of a DP Sensor with the P9 option is 4500 psig (310,26 bar). The static pressure limit of a DP Sensor with the P0 option is 6092 psig (420,00 bar).*

Coplanar multivariable sensor module

(3051SMV_ _1 or 2, 3051SF_1, 2, 5, or 6)

Operates within specifications between static line pressures of 0.5 psia (0.03 bar) and the values in the table below:

DP range	Static pressure range (GP/AP)		
	3	4	5[1]
1	800 psi (55.15 bar)	2000 psi (137.90 bar)	N/A
2	800 psi (55.15 bar)	3626 psi (250.00 bar)	6092 psi (420.00 bar)
3	800 psi (55.15 bar)	3626 psi (250.00 bar)	6092 psi (420.00 bar)
4	N/A	3626 psi (250.00 bar)	6092 psi (420.00 bar)
5	N/A	3626 psi (250.00 bar)	N/A

(1) *Static pressure range 5 is a sealed gauge sensor.*

Maximum working pressure limits

Maximum working pressure is the maximum pressure allowed for normal transmitter operation. For a differential pressure transmitter, the maximum working pressure is the static line pressure under which the transmitter can safely operate. If one side of the transmitter is exposed to the full static line pressure due to mis-valving, the transmitter will experience an output shift and must be re-zeroed. For a gauge or absolute pressure transmitter, the maximum working pressure is the same as the Upper Range Limit (URL). The maximum working pressure of transmitters with assemble-to options is limited by the lowest maximum pressure rating of the individual components.

Table 29: Rosemount 3051S Maximum Working Pressure

Range	3051S_CD 3051SAL_ _D 3051SAM_ _D	3051S_CG 3051SAL_ _G 3051SAM_ G	3051S_CA 3051SAL_ _A 3051SAM_ _A	3051S_TA 3051SAL_ _E 3051SAM_ _E	3051S_TG 3051SAL_ _T 3051SAM_ _T
0	750 psi 51.7 bar 5.17 MPa	N/A	5 psia 0.35 bar-a 0.035 MPa	N/A	N/A
1	2,000 psi 138 bar 13.8 MPa	0.9 psi 0.062 bar 0.0062 MPa	30 psia 2.07 bar-a 0.207 MPa	30 psia 2.07 bar-a 0.207 MPa	30 psi 2.07 bar-a 0.207 MPa
2	3,626 psi 250 bar 25 MPa	9 psi 0.62 bar 0.062 MPa	150 psia 10.3 bar-a 1.03 MPa	150 psia 10.3 bar-a 1.03 MPa	150 psi 10.3 bar-a 1.03 MPa
3	3,626 psi 250 bar 25 MPa	36 psi 2.48 bar 0.248 MPa	800 psia 55.2 bar-a 5.52 MPa	800 psia 55.2 bar-a 5.52 MPa	800 psi 55.2 bar-a 5.52 MPa
4	3,626 psi 250 bar 25 MPa	300 psi 20.7 bar 2.07 MPa	4,000 psia 276 bar-a 27.6 MPa	4,000 psia 276 bar-a 27.6 MPa	4,000 psi 276 bar-a 27.6 MPa
5	3,626 psi 250 bar 25 MPa	2,000 psi 138 bar 13.8 MPa	N/A	10,000 psia 690 bar-a 69.0 MPa	10,000 psi 690 bar-a 69.0 MPa

Note

The maximum working pressure limit of a DP Sensor with the P9 option is 4,500 psig (310,26 bar). The maximum working pressure limit of a DP Sensor with the P0 option is 6,092 psig (420,00 bar).

Table 30: Rosemount 3051SMV Maximum Working Pressure

	Static pressure range (GP/AP)		
DP range	3	4	5
1	800 psi 55.2 bar 5.52 MPa	2,000 psi 138 bar 13.8 MPa	N/A

Table 30: Rosemount 3051SMV Maximum Working Pressure *(continued)*

	Static pressure range (GP/AP)		
DP range	**3**	**4**	**5**
2	800 psi 55.2 bar 5.52 MPa	3,626 psi 250 bar 25 MPa	6,092 psi 420 bar 42.0 MPa
3	800 psi 55.2 bar 5.52 MPa	3,626 psi 250 bar 25 MPa	6,092 psi 420 bar 42.0 MPa
4	N/A	3,626 psi 250 bar 25 MPa	6,092 psi 420 bar 42.0 MPa
5	N/A	3,626 psi 250 bar 25 MPa	N/A

Burst pressure limits

Coplanar™ sensor module (3051S_C, 3051SMV, 3051SF, 3051SAM_ _G or A)

10,000 psig (689.47 bar)

Differential pressure (DP) range 2-4, static pressure range 5

16,400 psi (1,130.74 bar)

In-line sensor module (3051S_T, 3051SAM_ _T or E)

- Ranges 1–4: 11,000 psi (758.42 bar)
- Range 5: 26,000 psi (1792.64 bar)

Temperature limits

Ambient

–40 to 185 °F (–40 to 85 °C)

With LCD display[3]: –40 to 176 °F (–40 to 80 °C)

With option code P0: –20 to 185 °F (–28 to 85 °C)

With option code BR6: –76 to 185 °F (–60 to 85 °C)

Rosemount 3051SMV with SP Range 5: –20 to 185 °F (–28 to 85 °C)

Storage

–50 to 185 °F (–46 to 85 °C)

With LCD display: –40 to 185 °F (–40 to 85 °C)

With wireless output: –40 to 185 °F (–40 to 85 °C)

With option code BR6: –76 to 185 °F (–60 to 85 °C)

(3) LCD display may not be readable and LCD display updates will be slower at temperatures below –4 °F (–20 °C) to –40 °F (–40 °C). LCD display may be ordered with option code BR6, but the display is not functional below –40 °F (–40 °C). Functionality recovers as temperature reaches –4 °F (–20 °C) again.

Process temperature limits

At atmospheric pressures and above:

Coplanar sensor module 3051S_C, 3051SMV(1), 3051SF, 3051SAM_ _G or A	
Silicone fill sensor	N/A
with coplanar flange(2)	–40 to 250 °F (–40 to 121 °C)(3)
with traditional flange(4)	–40 to 300 °F (–40 to 149 °C)(3)(5)
with level flange(4)	–40 to 300 °F (–40 to 149 °C)(3)
with Rosemount 305 integral manifold(2)	–40 to 300 °F (–40 to 149 °C)(3)(5)
Inert fill sensor(2)	–40 to 185 °F (–40 to 85 °C)(6)(7)
with Option Code BR6, coplanar flange	–76 to 250 °F (–60 to 121 °C)(3)
with Option Code BR6, traditional flange	–75 to 300 °F (–60 to 149 °C)(3)
In-line sensor module 3051S_T, 3051SAM_ _T or E	
Silicone fill sensor(2)	–40 to 250 °F (–40 to 121 °C)(3)
with Option Code BR6	–76 to 250 °F (–60 to 121 °C)(3)
Inert fill sensor(2)	–22 to 250 °F (–30 to 121 °C)(3)
Rosemount 3051SAL Level Transmitter	
SYLTHERM XLT	–157 to 293 °F (–105 to 145 °C)
Silicone 704(8)	32 to 599 °F (0 to 315 °C)
Silicone 705(8)	68 to 698 °F (20 to 370 °C)
UltraTherm 805	770 °F (410 °C) with 850 °F (454 °C) design(9)
Silicone 200	–49 to 401 °F (–45 to 205 °C)
Tri-Therm 300	–40 to 401 °F (–40 to 205 °C)
Inert (Halocarbon)	–49 to 320 °F (–45 to 160 °C)
Glycerin and water(10)(11)	5 to 203 °F (–15 to 95 °C)
Neobee M-20(10)	5 to 437 °F (–15 to 225 °C)
Propylene glycol and water(10)(11)	5 to 203 °F (–15 to 95 °C)

(1) *Lower process temperature limit for 3051SMV static pressure range 5 is –20 °F.*
(2) *The maximum ambient temperature is reduced by 1.5° for every degree by which the process fluid temperature exceeds 185 °F (85 °C).*
(3) *220 °F (104 °C) limit in vacuum service; 130 °F (54 °C) for pressures below 0.5 psia.*
(4) *The maximum ambient temperature is reduced by 1.0° for every degree by which the process fluid temperature exceeds 185 °F (85 °C) for all traditional flanges and vertical mount level flanges.*
(5) *–20 °F (–29 °C) is the lower process temperature limit with option code P0.*
(6) *160 °F (71 °C) limit in vacuum service.*
(7) *Not available for 3051S_CA.*
(8) *Only available with Seal Connection Type/Capillary ID, Description Codes C, D, F, G, J, K, N, and P.*
(9) *UltraTherm 805 supports a maximum design temperature of 850 °F (454 °C). Design temperature rating is for non-continuous use with a cumulative exposure time less of than 12 hours. Continuous use temperature is rated to 770 °F (410 °C).*
(10) *This is a food grade fill fluid.*
(11) *Not suitable for vacuum applications.*

Thermal Range Expander temperature operating range

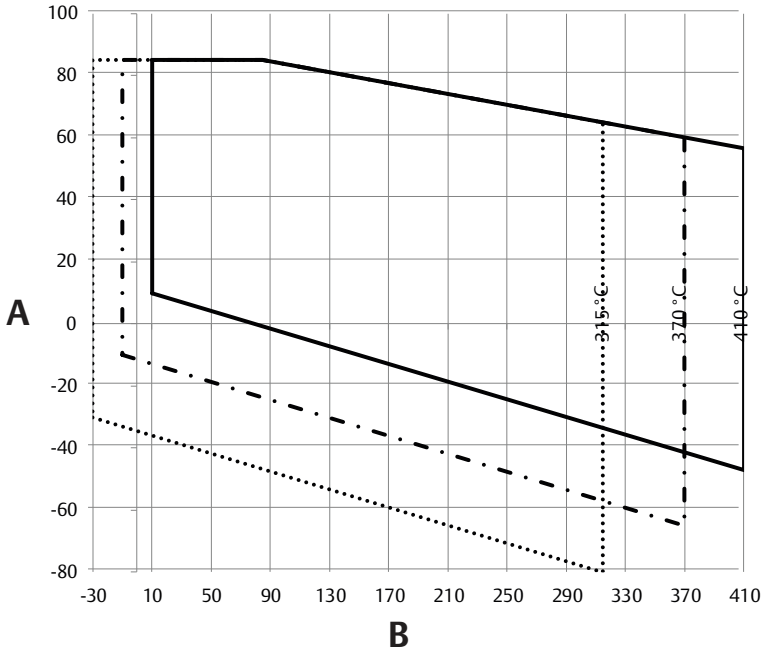

···· Silicone 704

·-·-· Silicone 705

— UltraTherm 805

A. Ambient temperature (°C)
B. Process temperature (°C)

Humidity limits

0–100 percent relative humidity

Turn-on time

When power is applied to the transmitter during startup, performance will be within specifications per the time period described below:

Note
Does not apply to wireless option code X.

For option code F, device will communicate on a segment in less than 20 seconds.

Transmitter	Turn-on time (typical)
3051S, 3051SF_D, 3051SAL_ _C	2 seconds
Diagnostics	5 seconds
3051SMV, 3051SF_1-7	5 seconds
3051S ERS System	6 seconds

Volumetric displacement

Less than 0.005 in^3 (0,08 cm^3)

Damping

Note
Does not apply to wireless option code X.

Analog output response time to a step change is user-selectable from 0 to 60 seconds for one time constant. For Rosemount 3051SMV, 3051SF_1-7, each variable can be individually adjusted. Software damping is in addition to sensor module response time.

Failure mode alarm

4–20 mA HART® (output option code A)

If self-diagnostics detect a gross transmitter failure, the analog signal will be driven offscale to alert the user. Rosemount standard (default), NAMUR, and custom alarm levels are available (see Alarm configuration).

High or low alarm signal is software-selectable or hardware-selectable via the optional switch (option D1).

Alarm configuration

Configuration	High alarm	Low alarm
Default	≥ 21.75 mA	≤ 3.75 mA
NAMUR compliant(1)	≥ 22.5 mA	≤ 3.6 mA
Custom levels(2)(3)	20.2 - 23.0 mA	3.4 - 3.8 mA

(1) *Analog output levels are compliant with NAMUR recommendation NE 43, see option codes C4 or C5.*
(2) *Low alarm must be 0.1 mA less than low saturation and high alarm must be 0.1 mA greater than high saturation.*
(3) *For Rosemount 3051SMV and option code DA2, low alarm custom values are 3.57 - 3.8 mA.*

Physical specifications

Material selection

Emerson provides a variety of Rosemount products with various product options and configurations, including materials of construction that can be expected to perform well in a wide range of applications.

The product information presented is intended as a guide for the purchaser to make an appropriate selection for the application. It is the purchaser's sole responsibility to make a careful analysis of all process parameters (such as all chemical components, temperature, pressure, flow rate, abrasives, contaminants, etc.), when specifying product, materials, options, and components for the particular application. Emerson is not in a position to evaluate or guarantee the compatibility of the process fluid or other process parameters with the product, options, configuration, or materials of construction selected.

Electrical connections

½–14 NPT, G½, and M20 × 1½ conduit. HART® interface connections fixed to terminal block for Output code A and X.

Process connections

Coplanar sensor module (Rosemount 3051S_C, 3051SMV, 3051SF, 3051SAM_ _G or A)	
Standard	¼–18 NPT on 2⅛-in. centers
Flange Adapters	½–14 NPT and RC½ on 2-in. (50.8 mm), 2⅛-in. (54.0 mm), or 2¼-in. (57.2 mm) centers

In-line sensor module (Rosemount 3051S_T, 3051SAM_ _T or E)	
Standard	½–14 NPT female
F11 Code	Non-threaded instrument flange (available in SST for sensor ranges 1–4 only)
G11 Code	G½ A DIN 16288 male (available in SST for sensor ranges 1–4 only)
H11 Code	Autoclave type F-250C (Pressure relieved 9⁄16–18 gland thread; ¼ OD high pressure tube 60° cone; available in SST for sensor range 5 only)
Level transmitter (Rosemount 3051SAL)	
FF Seal	2-in. (DN 50), 3-in. (DN 80), or 4-in. (DN 100); ANSI Class 150, 300, 600, 900, 1500, and 2500 flange; JIS 10K, 20K, or 40K flange; PN 10/16 or PN 40 flange
PF Seal	
EF Seal	
RF Seal	1-in. (DN 25) or 1½-in. (DN 40); ANSI Class 150, 300, or 600 flange; JIS 10K, 20K, or 40K flange; PN 40 flange
RT Seal	¼–18, ½–14, ¾–14, or 1–11.5 NPT Female
FC Seal	2- or 3-in.; ANSI Class 150, 300, 600, 900, 1500, 2500 flange; PN 63 or PN 100 flange
RC Seal	½-, ¾-, 1-, or 1½-in.; ANSI Class 150, 300, 600, 900, 1500, 2500 flange; PN 63 or PN 100 flange
SC Seal	1½-, 2-, or 3-in. Hygienic Tri-Clover Style Tri Clamp
SS Seal	4-in. Hygienic Tank Spud

Process-wetted parts

Process isolating diaphragms

Coplanar™ sensor module (3051S_C, 3051SMV)	
316L SST (UNS S31603), Alloy C-276 (UNS N10276), Alloy 400 (UNS N04400), Tantalum (UNS R05440), Gold-Plated Alloy 400, Gold-plated 316L SST	
B11 Code	Low side process connection is SST
In-line sensor module (3051S_T)	
316L SST (UNS S31603), Alloy C-276 (UNS N10276)	
Level transmitter (Rosemount 3051SAL)	
FF Seal	316L SST, Alloy C-276, Tantalum
EF Seal	
RF Seal	
RT Seal	
PF Seal	
FC Seal	
RC Seal	
SC Seal	316L SST, Alloy C-276
SS Seal	

Drain/vent valves

316 SST, Alloy C-276, or Alloy 400/K-500 material

(Drain vent seat: Alloy 400, Drain vent stem: Alloy K-500)

Note
Alloy 400/K-500 is not available with Rosemount 3051SAL.

Process flanges and flange adapters

Plated carbon steel

SST: CF-8M (Cast 316 SST) per ASTM A743

Cast C-276: CW-12MW per ASTM A494

Alloy 400: M-30C per ASTM A494

Wetted O-rings

Glass-filled PTFE (Graphite-filled PTFE with isolating diaphragm code 6)

Rosemount 3051SAL mounting flange

Zinc-cobalt plated CS or 316 SST

Rosemount 3051SAL seal extension

CF-3M (Cast 316L SST, material per ASTM A743) or CW-12MW (Cast C-276, material per ASTM A494)

Non-wetted parts

Electronics housing

Low-copper aluminum alloy or CF-8M (Cast 316 stainless steel [SST])

Enclosures meet NEMA® Type 4X, IP66, and IP68 [66 ft. (20 m) for 168 hours] when properly installed.

Note
IP 68 not available with Wireless output.

Coplanar sensor module housing

SST: CF-3M (Cast 316L SST)

Bolts

Plated carbon steel per ASTM A449, Type 1

Austenitic 316 SST per ASTM F593

ASTM A453, Class D, Grade 660 SST

ASTM A193, Grade B7M alloy steel

ASTM A193, Class 2, Grade B8M SST

Alloy K-500

Sensor module fill fluid

Silicone is standard.

Inert is available as option code (L1).

Note
Inert is not available with Rosemount 3051S_CA.

Inert for in-line series uses Fluorinert™ FC-43.

Inert for coplanar series uses Halocarbon.

Seal fill fluid (liquid level only)

Rosemount 3051SAL: Silicone 200, Tri-Therm 300, Silicone 704, Silicone 705, UltraTherm™ 805, inert, SYLTHERM™ XLT, Neobee® M-20, glycerin and water, propylene glycol and water

Paint for aluminum housing

Polyurethane

Cover O-rings

Buna-N

Wireless antenna

External antenna (WK/WM): PBT/PC integrated omni-directional antenna

Remote antenna (WN): Fiberglass omni-directional antenna

Power module

Field replaceable, keyed connection eliminates the risk of incorrect installation, Intrinsically Safe Lithium-thionyl chloride power module with PBT enclosure

Shipping weights

Table 31: Sensor Modules

Coplanar sensor module(1)
3.1 lb. (1.4 kg)
In-line sensor module
1.4 lb. (0.6 kg)

(1) *Flange and bolts not included.*

Table 32: Transmitters

Fully functional transmitter with module, terminal bock, standard covers, and connector board, if applicable.

Transmitter with coplanar sensor module (3051SAM_ _G or A)	
Junction Box housing, SST flange	6.3 lb. (2.8 kg)
Plantweb™ housing, SST flange	6.7 lb. (3.1 kg)
Wireless Plantweb housing, SST flange	7.3 lb. (3.3 kg)
Transmitter with in-line sensor module (3051SAM_ _T or E)	
Junction box housing	3.2 lb. (1.4 kg)
Plantweb housing	3.7 lb. (1.7 kg)
Wireless Plantweb housing	4.2 lb. (1.9 kg)

Table 33: Transmitter Options

Option code	Option	Add lb. (kg)
1J, 1K, 1L	SST Plantweb™ housing	3.5 (1.6)
2J	SST junction box housing	3.4 (1.5)
2A, 2B, 2C	Aluminum junction box housing	1.1 (0.5)
1A, 1B, 1C	Aluminum Plantweb housing	1.1 (0.5)
M5(1)	LCD display for aluminum Plantweb housing LCD display for SST Plantweb housing	0.8 (0.4) 1.6 (0.7)
B4	SST mounting bracket for coplanar flange	1.2 (0.5)
B1, B2, B3	Mounting bracket for traditional flange	1.7 (0.8)

Table 33: Transmitter Options *(continued)*

Option code	Option	Add lb. (kg)
B7, B8, B9	Mounting bracket for traditional flange with SST bolts	1.7 (0.8)
BA, BC	SST bracket for traditional flange	1.6 (0.7)
B4	SST mounting bracket for in-line	1.3 (0.6)
F12, F22[(2)]	SST traditional flange with SST drain vents	3.2 (1.5)
F13, F23[(2)]	Cast C-276 traditional flange with Alloy C-276 drain vents	3.6 (1.6)
E12, E22[(2)]	SST coplanar Flange with SST drain vents	1.9 (0.9)
F14, F24[(2)]	Cast Alloy 400 traditional flange with Alloy 400/K-500 drain vents	3.6 (1.6)
F15, F25[(2)]	SST traditional flange with Alloy C-276 drain vents	3.2 (1.5)
G21	Level flange (3-in., Class 150)	12.6 (5.7)
G22	Level flange (3-in., Class 300)	15.9 (7.2)
G11	Level flange (2-in., Class 150)	6.8 (3.1)
G12	Level flange (2-in., Class 300)	8.2 (3.7)
G31	DIN level flange, SST, DN 50, PN 40	7.8 (3.5)
G41	DIN level flange, SST, DN 80, PN 40	13.0 (5.9)

(1) *Includes LCD display and display cover.*
(2) *Includes mounting bolts.*

Table 34: Transmitter Components

Item	Weight in lb. (kg)
Aluminum standard cover	0.4 (0.2)
SST standard cover	1.3 (0.6)
Aluminum display cover	0.7 (0.3)
SST display cover	1.5 (0.7)
Wireless extended cover	0.7 (0.3)
LCD display[(1)]	0.1 (0.04)
Junction box terminal block	0.2 (0.1)
Plantweb terminal block	0.2 (0.1)
Power module	0.5 (0.2)

(1) *Display only.*

Table 35: Rosemount 3051SAL without SuperModule Platform, Housing, or Transmitter Options

Flange	Flush lb. (kg)	2-in. Ext. lb. (kg)	4-in. Ext. lb. (kg)	6-in. Ext. lb. (kg)
2-in., Class 150	9.5 (4.3)	N/A	N/A	N/A
3-in., Class 150	15.7 (7.1)	16.4 (7.4)	17.6 (8.0)	18.9 (8.6)
4-in., Class 150	21.2 (9.6)	20.9 (9.5)	22.1 (10.0)	23.4 (10.6)
2-in., Class 300	11.3 (5.1)	N/A	N/A	N/A
3-in., Class 300	19.6 (8.9)	20.3 (9.2)	21.5 (9.8)	22.8 (10.3)
4-in., Class 300	30.4 (13.8)	30.3 (13.7)	31.5 (14.3)	32.8 (14.9)
2-in., Class 600	12.8 (5.8)	N/A	N/A	N/A
3-in., Class 600	22.1 (10.0)	22.8 (10.3)	24.0 (10.9)	25.3 (11.5)

Table 35: Rosemount 3051SAL without SuperModule Platform, Housing, or Transmitter Options *(continued)*

Flange	Flush lb. (kg)	2-in. Ext. lb. (kg)	4-in. Ext. lb. (kg)	6-in. Ext. lb. (kg)
DN 50/PN 40	11.3 (5.1)	N/A	N/A	N/A
DN 80/PN 40	16.0 (7.3)	16.7 (7.6)	17.9 (8.1)	19.2 (8.7)
DN 100/PN 10/16	11.2 (5.1)	11.9 (5.4)	13.1 (5.9)	14.4 (6.5)
DN 100/PN 40	12.6 (5.7)	13.3 (6.0)	14.5 (6.6)	15.8 (7.1)

Product certifications

See the Rosemount 3051S Quick Start Guides for detailed information on the existing approvals and certifications.

Product approval information	Links
Rosemount 3051S Series Pressure Transmitter and 3051SF Series Flow Meter with Advanced HART® Diagnostics QSG	Link
Rosemount 3051S Transmitter with FOUNDATION™ Fieldbus protocol QSG	Link
Rosemount 3051S Series Pressure Transmitter and Rosemount 3051SF Series Flow Meter with HART® Protocol QSG	Link
Rosemount 3051S Series Pressure Transmitter and Rosemount 3051SF Series Flow Meter with *Wireless*HART® Protocol QSG	Link

Dimensional drawings

Transmitter with coplanar module

Dimensions are in inches (millimeters).

Figure 6: Transmitter with Coplanar Sensor Module and Flange (Front View)

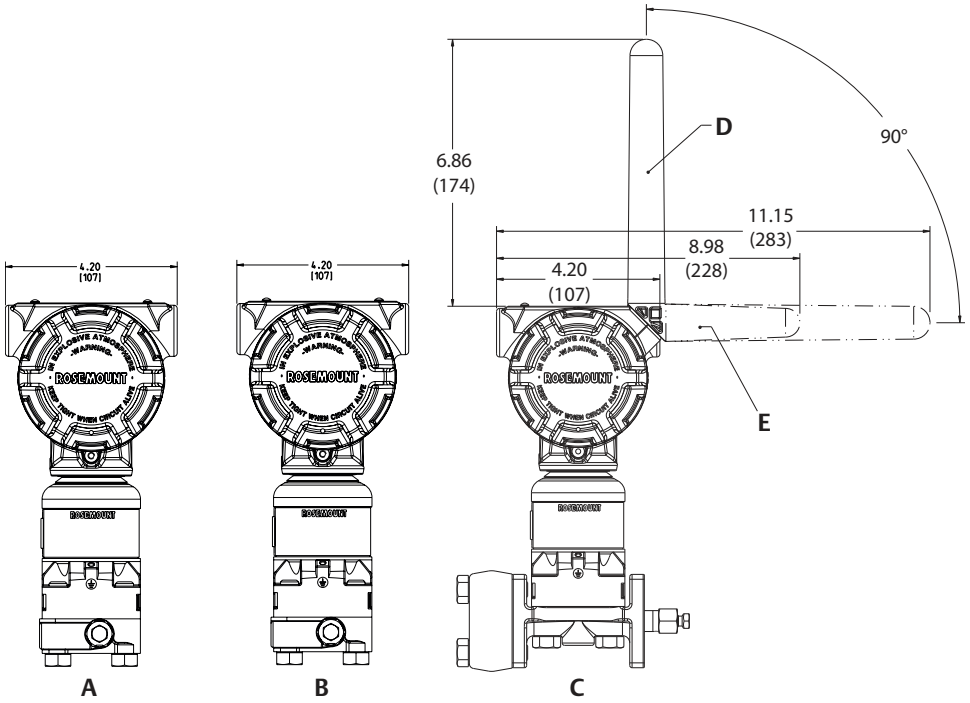

A. Plantweb™ housing
B. Junction box housing
C. Wireless housing
D. Extended range external antenna
E. External antenna

Figure 7: Transmitter with Coplanar Sensor Module and Flange (Side View)

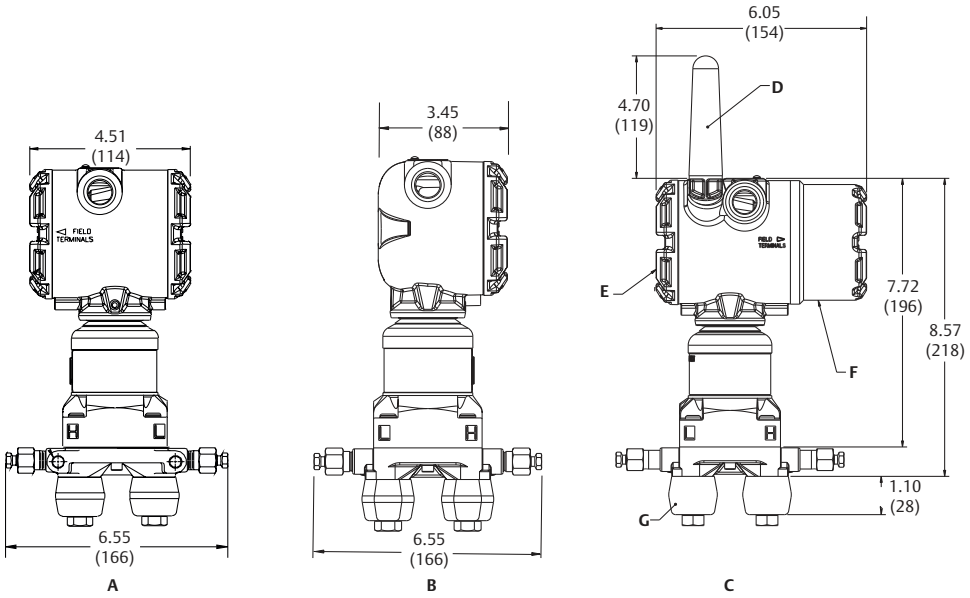

A. Plantweb housing
B. Junction box housing
C. Wireless housing
D. 2.4 GHz standard range antenna
E. Transmitter electronics
F. Field terminals
G. Flange adapters (optional)

Figure 8: Transmitter with Coplanar Sensor Module and Traditional Flange (Front View)

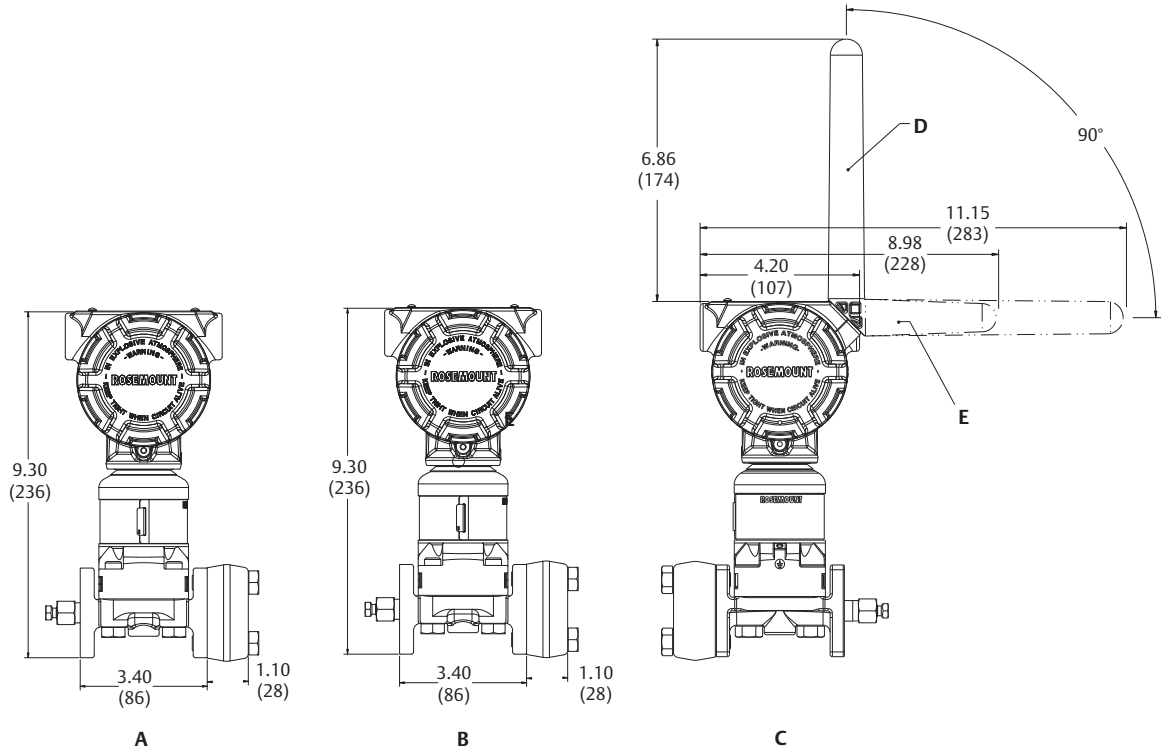

A. Plantweb housing
B. Junction box housing
C. Wireless housing
D. Extended range external antenna
E. External antenna

Figure 9: Transmitter with Coplanar Sensor Module and Traditional Flange (Side View)

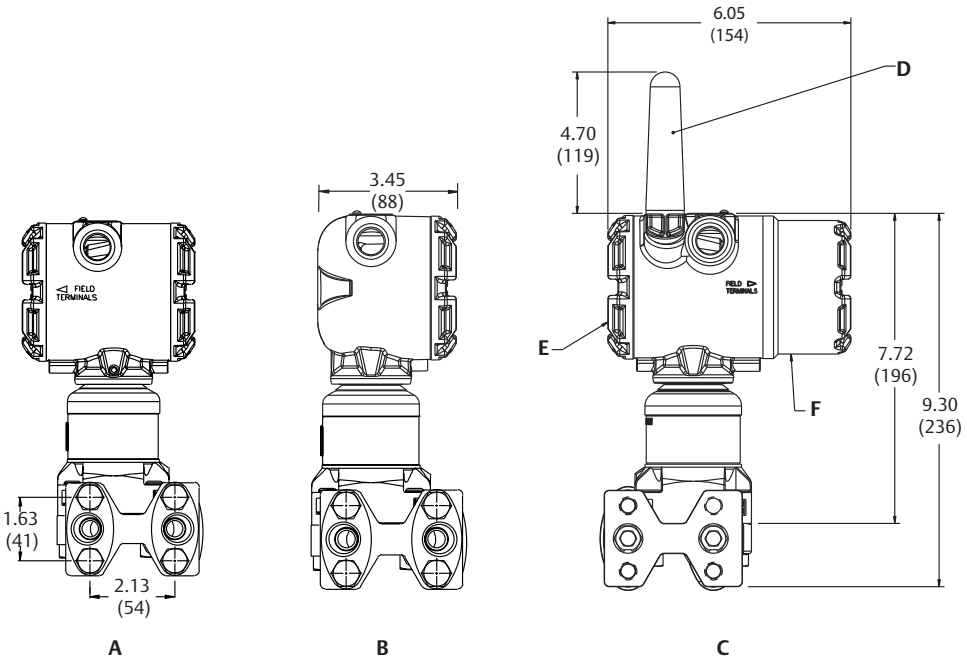

A. Plantweb housing
B. Junction box housing
C. Wireless housing
D. External antenna
E. Transmitter electronics
F. Field terminals

Transmitter with inline module

Dimensions are in inches (millimeters).

Figure 10: Transmitter with In-line Sensor Module (Front View)

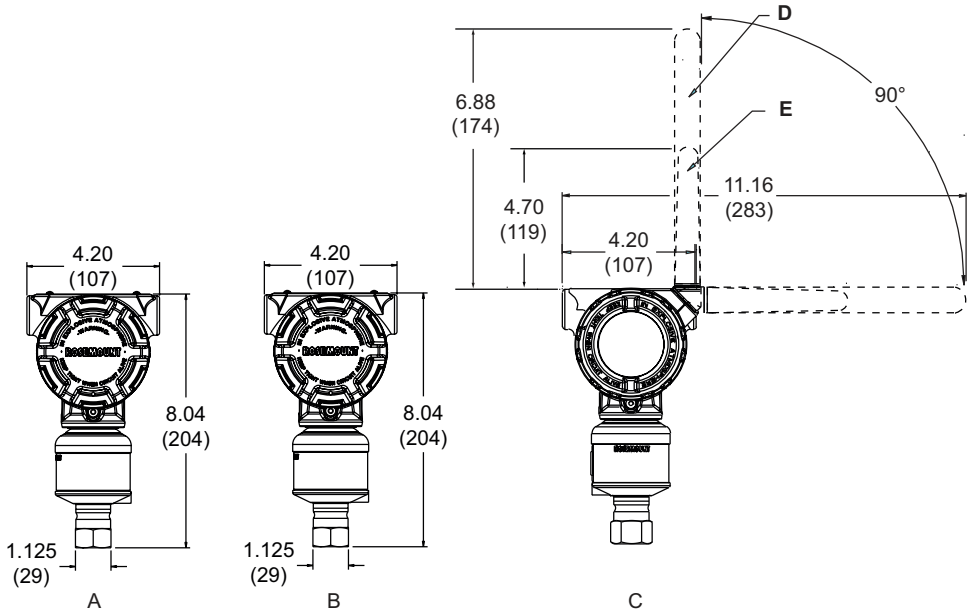

Note

For ranges 1A-4A, ½-in. NPT 316L SST process wetted connection. For detailed dimensions on other configurations, see Type I drawings at Emerson.com/Rosemount.

A. Plantweb housing
B. Junction box housing
C. Wireless housing
D. Extended range external antenna
E. External antenna

Figure 11: Transmitter with In-line Sensor Module (Side View)

Note
For ranges 1A-4A, ½-in. NPT 316L SST process wetted connection. For detailed dimensions on other configurations, see Type I drawings at Emerson.com/Rosemount.

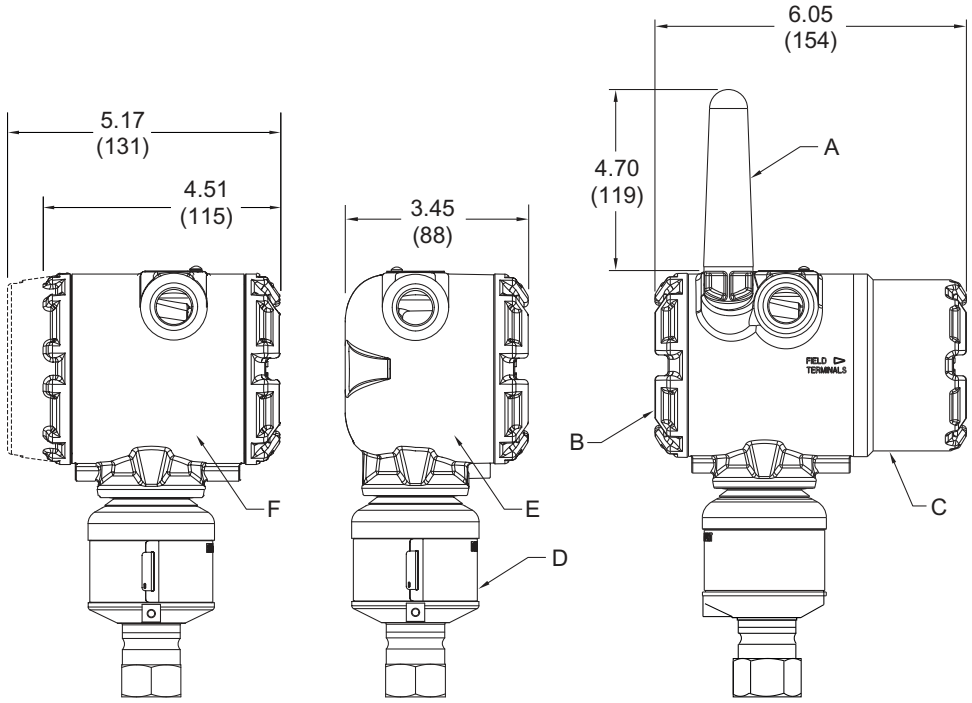

A. Plantweb housing
B. Junction box housing
C. Wireless housing
D. 2.4 GHz standard range antenna
E. Transmitter electronics
F. Field terminals

Remote mount antenna

Dimensions are in inches (millimeters).

Figure 12: High Gain, Remote Mount Antenna (WN Option)

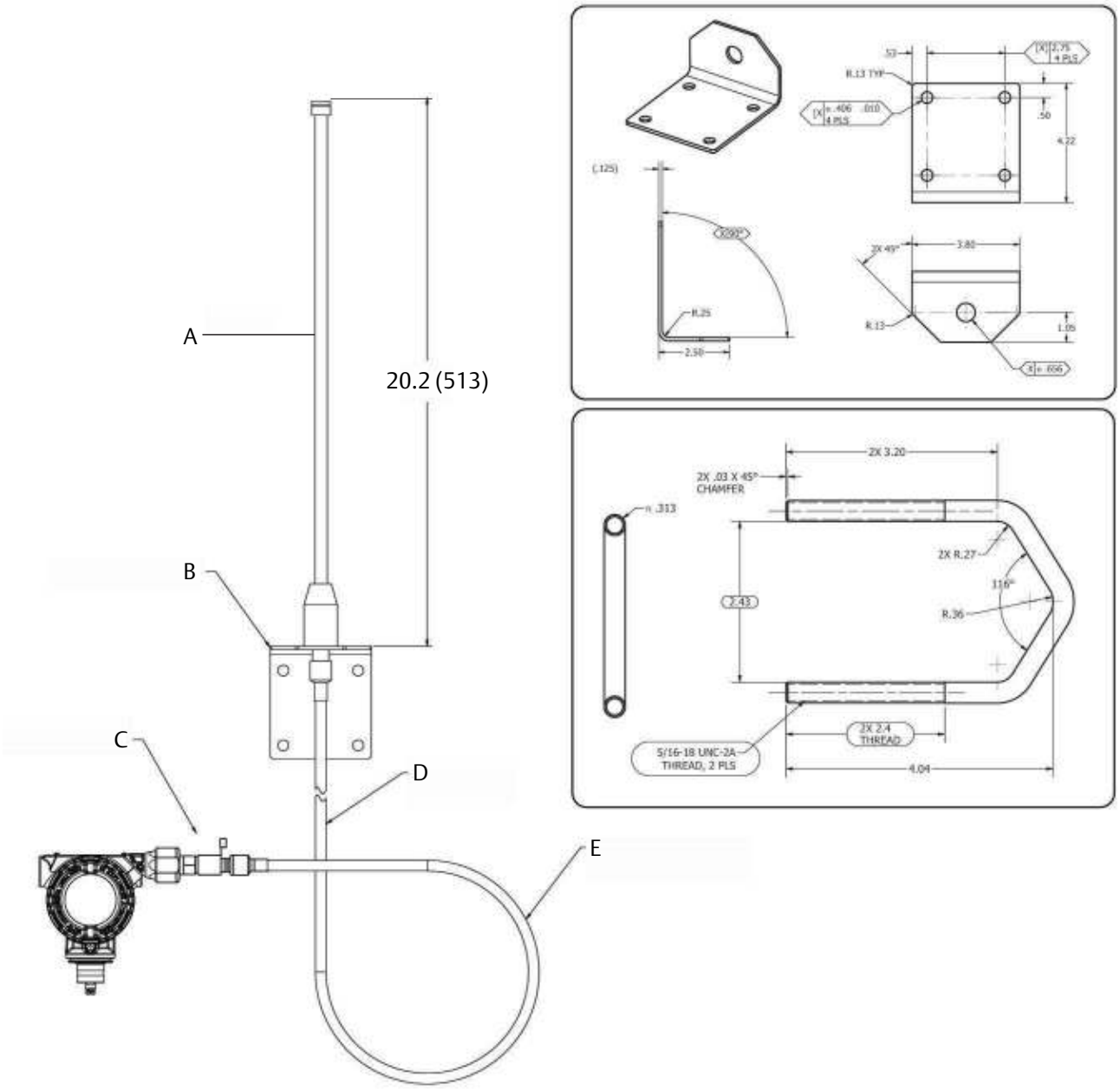

A. Antenna
B. Mounting bracket
C. Lightning arrester
D. 25 ft. (7.6 m) cable
E. Min drip loop Ø12-in. (0.3 m)

Mounting configurations

Dimensions are in inches (millimeters).

Figure 13: Coplanar Mounting Configurations (B4 Bracket)

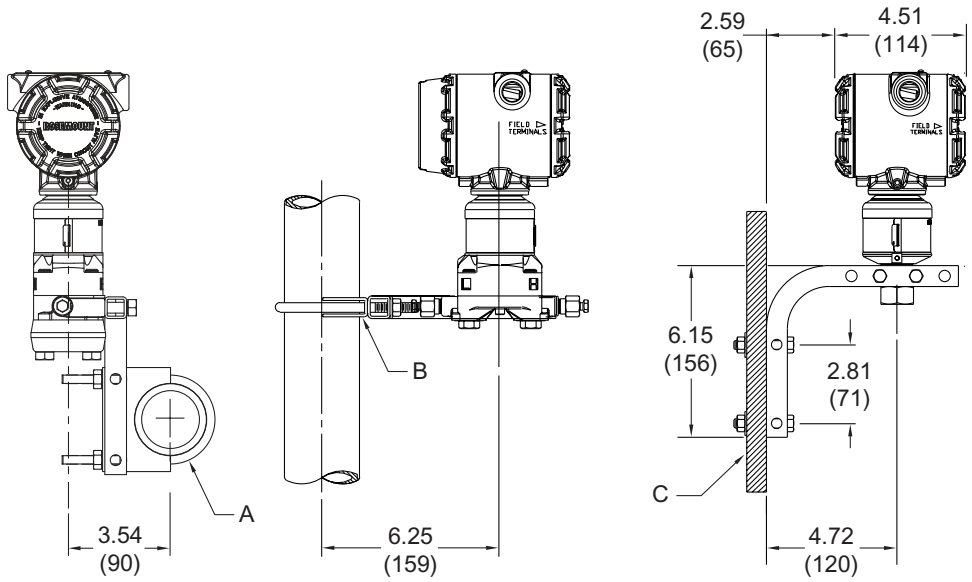

A. Pipe mount (front view)
B. Pipe mount (side view)
C. Panel mount (side view)

Figure 14: Traditional Mounting Configurations

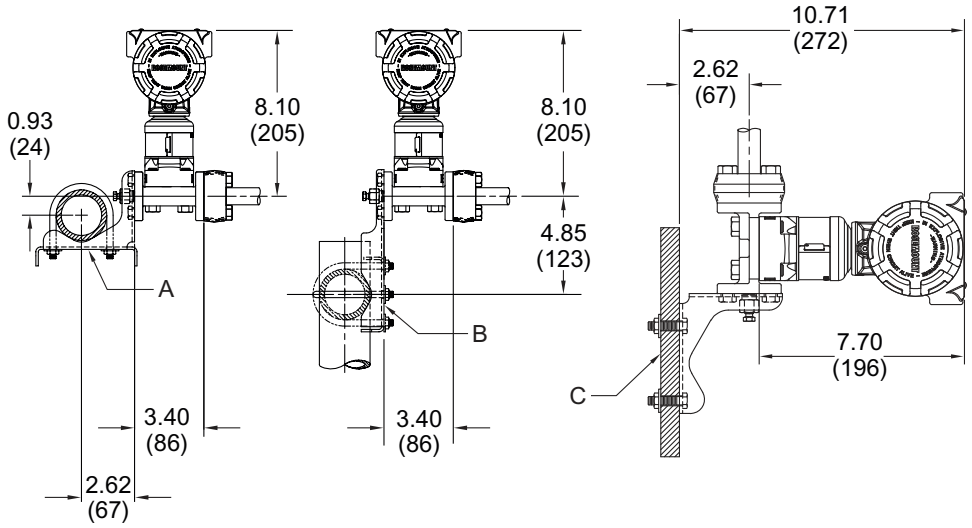

A. Pipe mount
B. Pipe mount (flat bracket)
C. Panel mount

Figure 15: In-line Mounting Configurations (B4 Bracket)

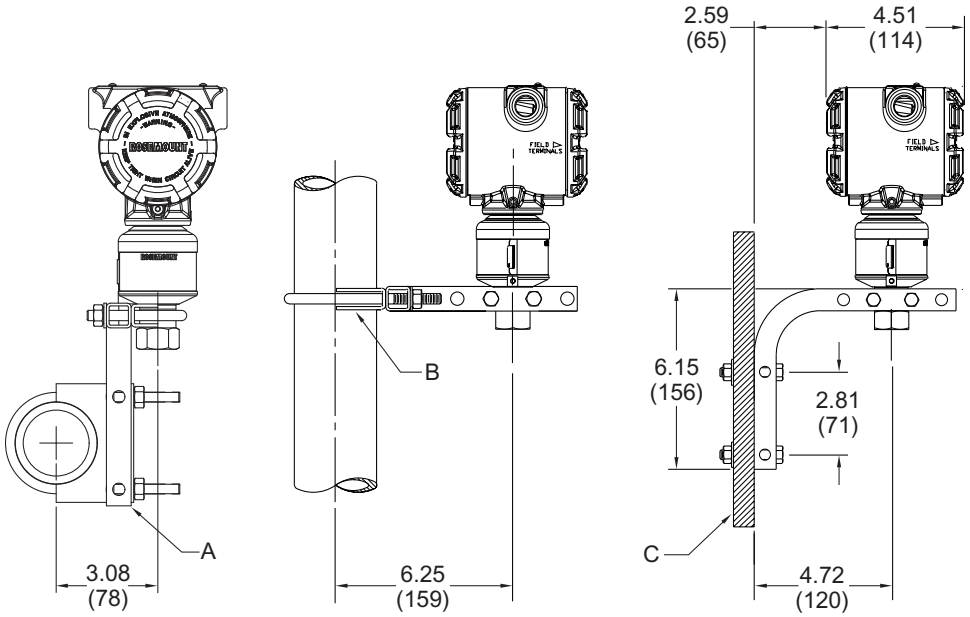

A. Pipe mount (front view)
B. Pipe mount (side view)
C. Panel mount (side view)

Figure 16: Remote Display Mounting Configurations (B4 Bracket)

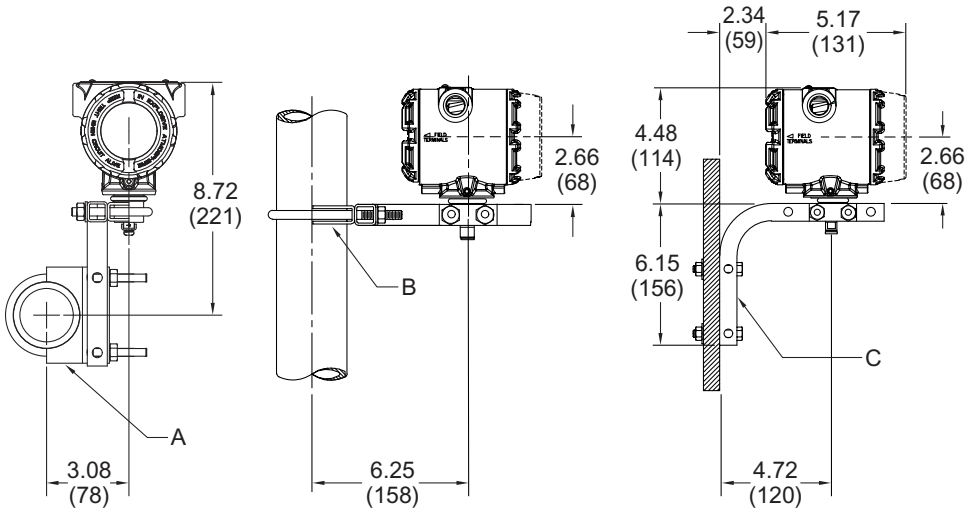

A. Pipe mount (front view)
B. Pipe mount (side view)
C. Panel mount (side view)

Flow meters

Dimensions are in inches (millimeters).

Figure 17: Rosemount 3051SFA Annubar Flow Meter

Note
The Pak-Lok Annubar model is available up to Class 600 ANSI (1,440 psig at 100 °F [99 bar at 38 °C]).

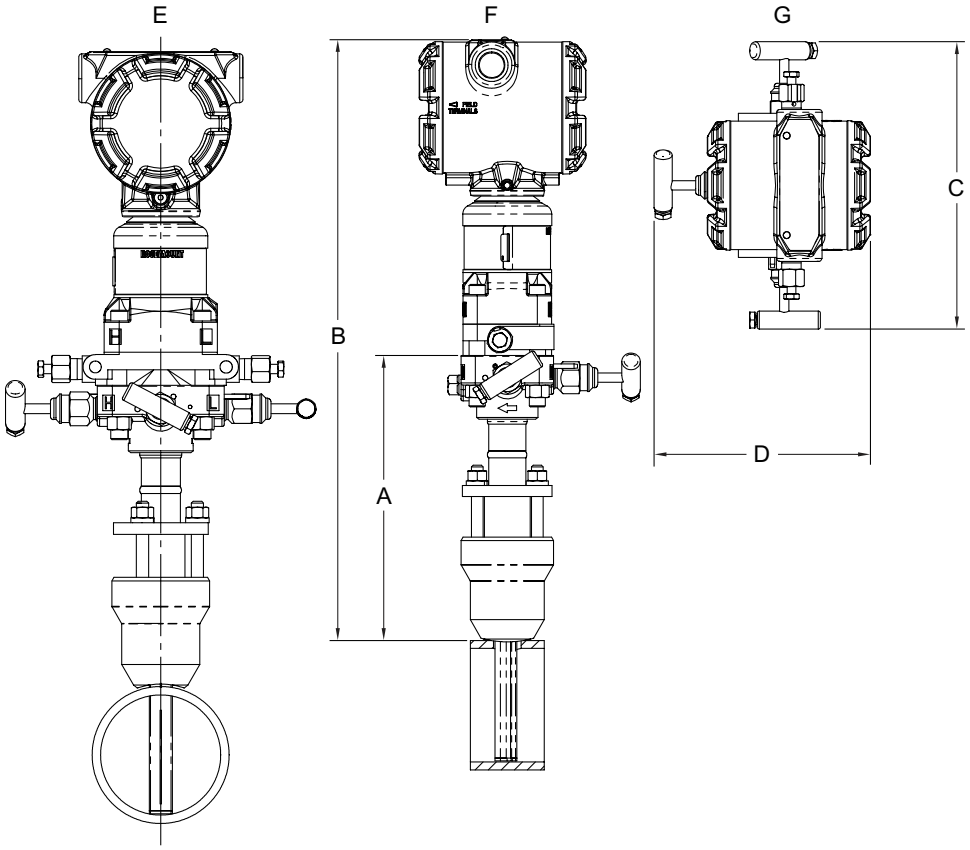

A. *Dimension A (reference Table 36)*
B. *Dimension B (reference Table 36)*
C. *Dimension C (reference Table 36)*
D. *Dimension D (reference Table 36)*
E. *Front view*
F. *Side view*
G. *Top view*

Table 36: Rosemount 3051CFA Annubar Flow Meter Dimensional Data

Sensor size	A (Max)	B (Max)	C (Max)	D (Max)
1	8.50 (215,9)	17.10 (434,3)	8.66 (220,0)	7.00 (177,8)
2	11.00 (279,4)	19.60 (497,8)	8.66 (220,0)	7.00 (177,8)
3	12.00 (304,8)	20.60 (523,2)	8.66 (220,0)	7.00 (177,8)

Figure 18: Rosemount 3051SFC Compact Orifice Flow Meter (Primary Element Type code A)

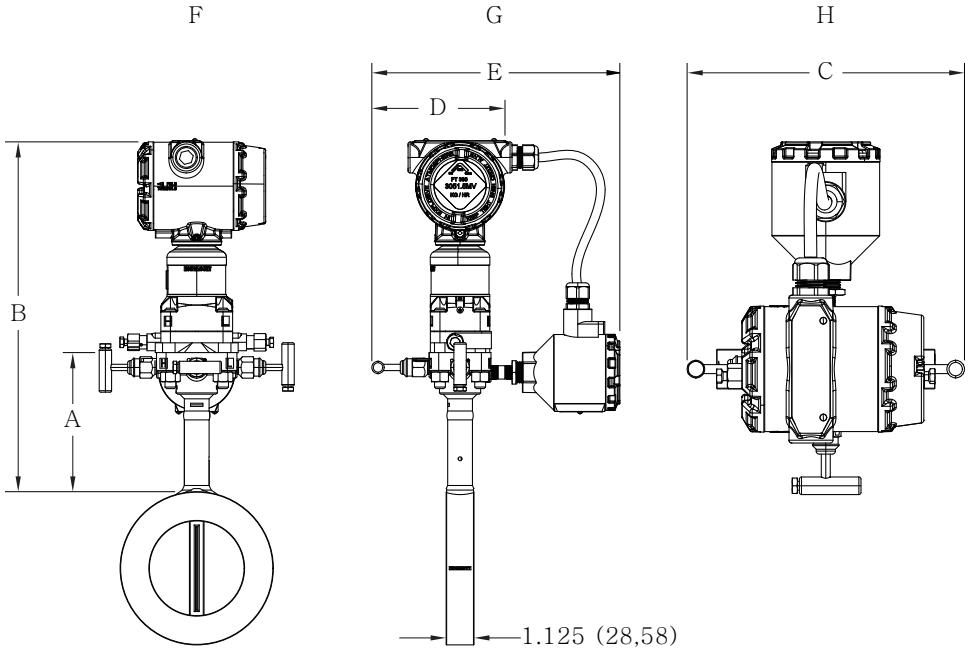

A. *Dimension A (reference Table 37)*
B. *Dimension B (reference Table 37)*
C. *Dimension C (reference Table 37)*
D. *Dimension D (reference Table 37)*
E. *Dimension E (reference Table 37)*
F. *Front view (orifice plate)*
G. *Side view (orifice plate)*
H. *Top view (orifice plate)*

Figure 19: Rosemount 3051SFC Compact Orifice Flow Meter (Primary Element Type code C and P)

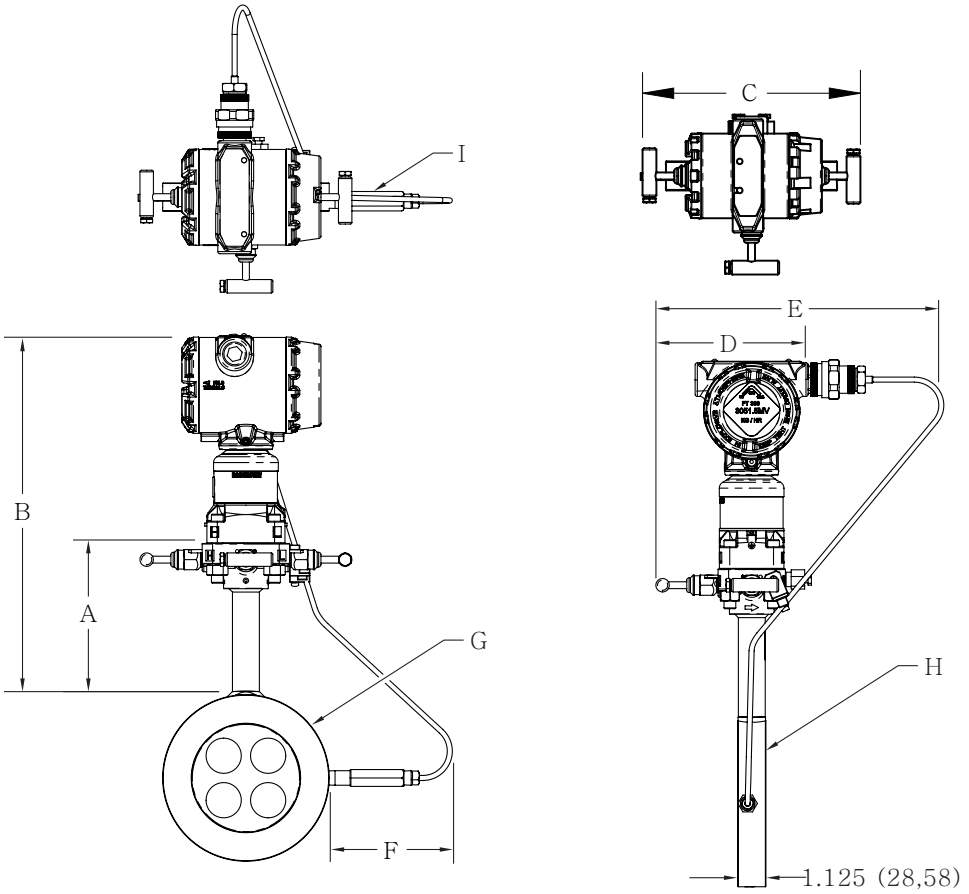

A. Dimension A (reference Table 37)
B. Dimension B (reference Table 37)
C. Dimension C (reference Table 37)
D. Dimension D (reference Table 37)
E. Dimension E (reference Table 37)
F. Dimension F (reference Table 37)
G. Front view (orifice plate)
H. Side view (orifice plate)
I. Top view (orifice plate)

Table 37: Rosemount 3051SFC Compact Orifice Flow Meter Dimensional Data

Primary element type	A	B	Transmitter height	C	D	E	F
Type A	5.62 (143)	Transmitter Height + A	8.53 (217)	7.75 (197) - closed 8.25 (210) - open	6.00 (152) - closed 6.25 (159) - open	10.0 (254) - closed 10.25 (260,3) - open	N/A
Type P and C	5.62 (143)	Transmitter Height + A	7.70 (196)	7.75 (197) - closed 8.25 (210) - open	6.00 (152) - closed 6.25 (159) - open	10.2 (257,8) - closed 10.4 (26,2) - open	Max of 7.2 (184)

Figure 20: Rosemount 3051SFP Integral Orifice Flow Meter

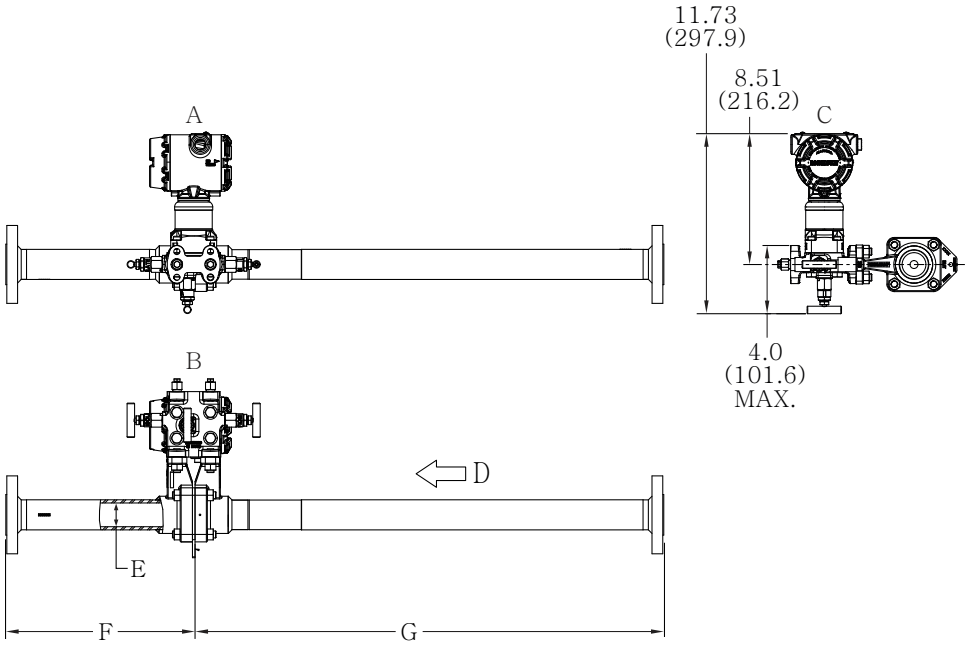

A. Front view
B. Bottom view
C. Side view
D. Direction of flow
E. Bore diameter (B.D.)
F. Downstream dimension (including orifice plate)
G. Upstream dimension

Scalable level transmitters

Dimensions are in inches (millimeters).

Figure 21: Rosemount 3051S Scalable Level Transmitter with FF Seal

Note
Seal dimensions and pressure ratings can be found in the Rosemount DP Level Transmitters and 1199 Remote Seals Product Data Sheet.

Note
Lower housing (flushing ring) is available with FFW style flange.

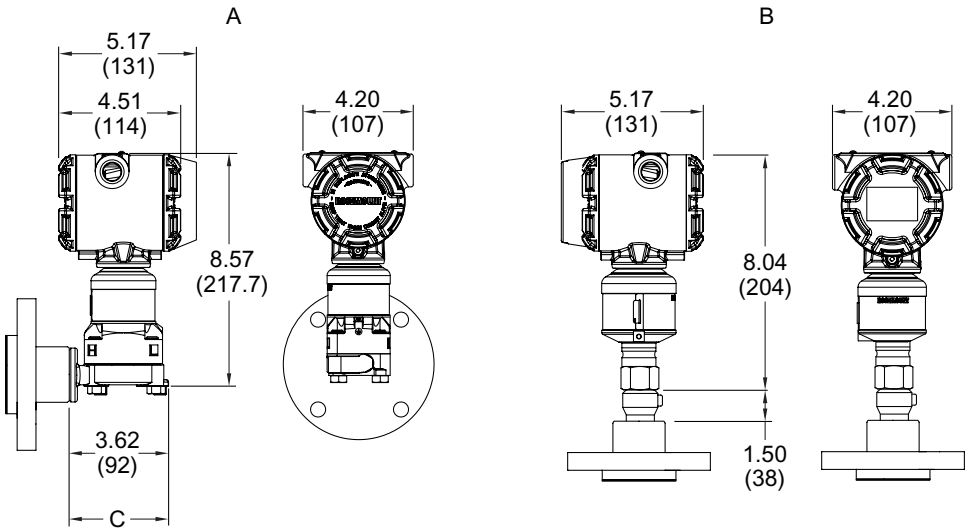

A. Coplanar
B. In-line
C. + Direct mount extension length

Figure 22: Rosemount 3051S Scalable Level Transmitter with EF Seal

Note
Seal dimensions and pressure ratings can be found in the Rosemount DP Level Transmitters and 1199 Remote Seals Product Data Sheet.

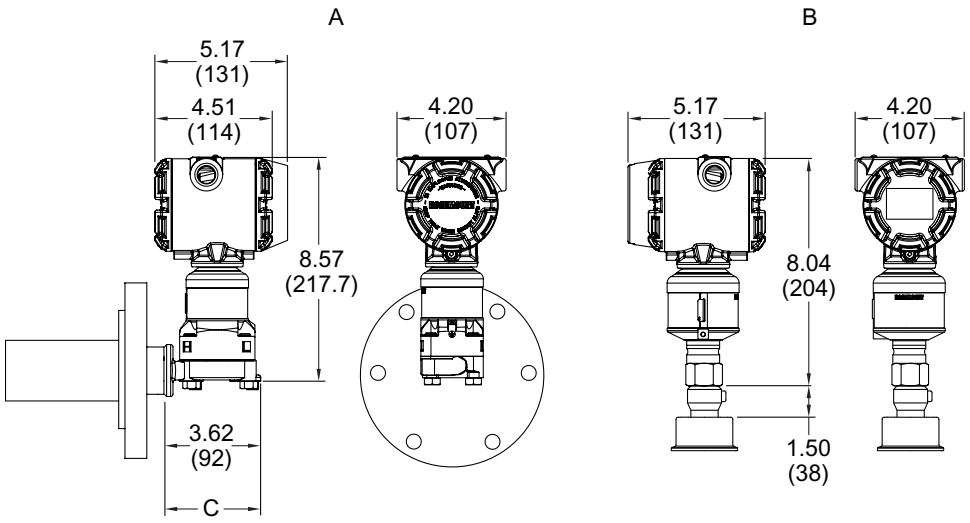

A. Coplanar
B. In-line
C. + Direct mount extension length

Figure 23: Rosemount 3051S Scalable Level Transmitter with RF Seal

Note
Seal dimensions and pressure ratings can be found in the Rosemount DP Level Transmitters and 1199 Remote Seals Product Data Sheet.

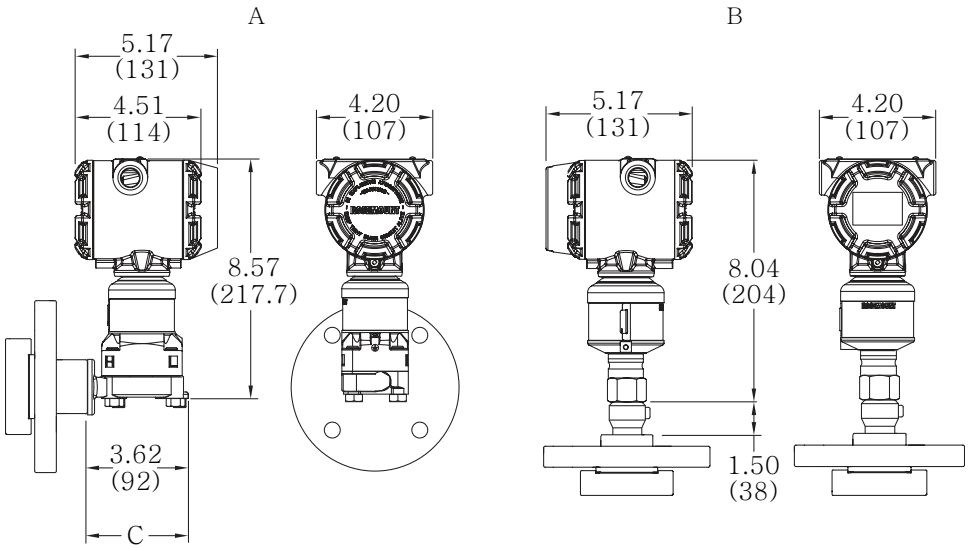

A. Coplanar
B. In-line
C. + Direct mount extension length

Figure 24: Rosemount 3051S Scalable Level Transmitter with RT Seal

Note
Seal dimensions and pressure ratings can be found in the Rosemount DP Level Transmitters and 1199 Remote Seals Product Data Sheet.

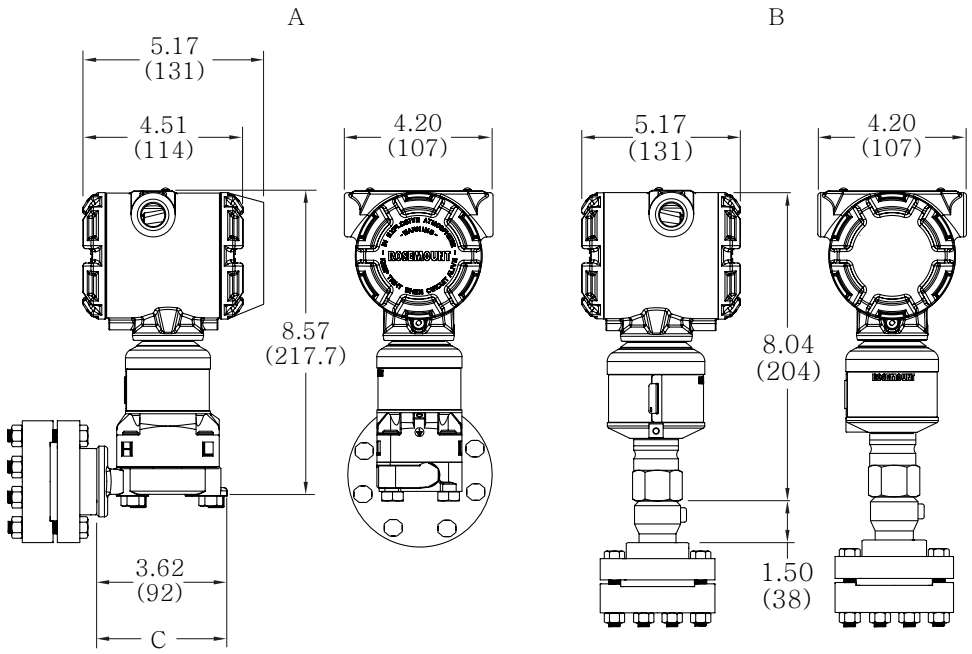

A. Coplanar
B. In-line
C. + Direct mount extension length

Figure 25: Rosemount 3051S Scalable Level Transmitter with SS Seal

Note
Seal dimensions and pressure ratings can be found in the Rosemount DP Level Transmitters and 1199 Remote Seals Product Data Sheet.

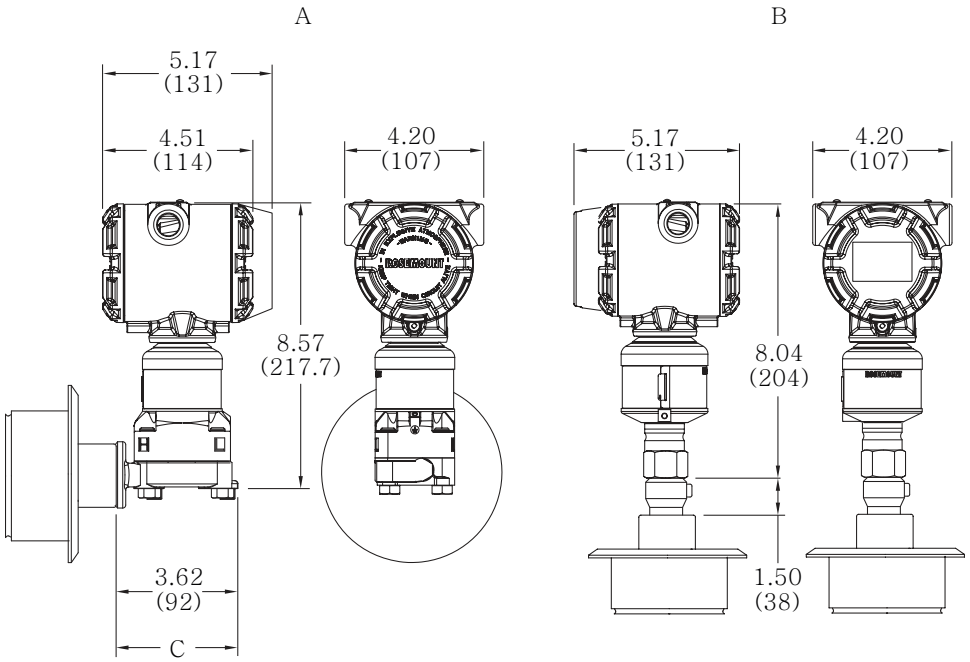

A. Coplanar
B. In-line
C. + Direct mount extension length

Figure 26: Rosemount 3051S Scalable Level Transmitter with SC Seal

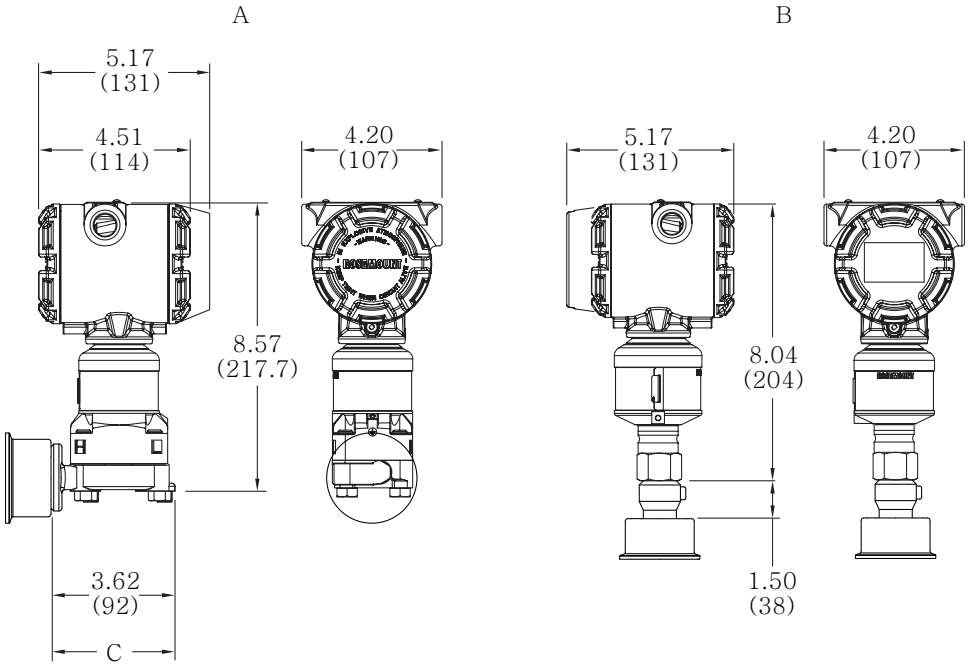

A. Coplanar
B. In-line
C. + Direct mount extension length

Figure 27: Rosemount 3051S Scalable Level Transmitter with Thermal Range Expander

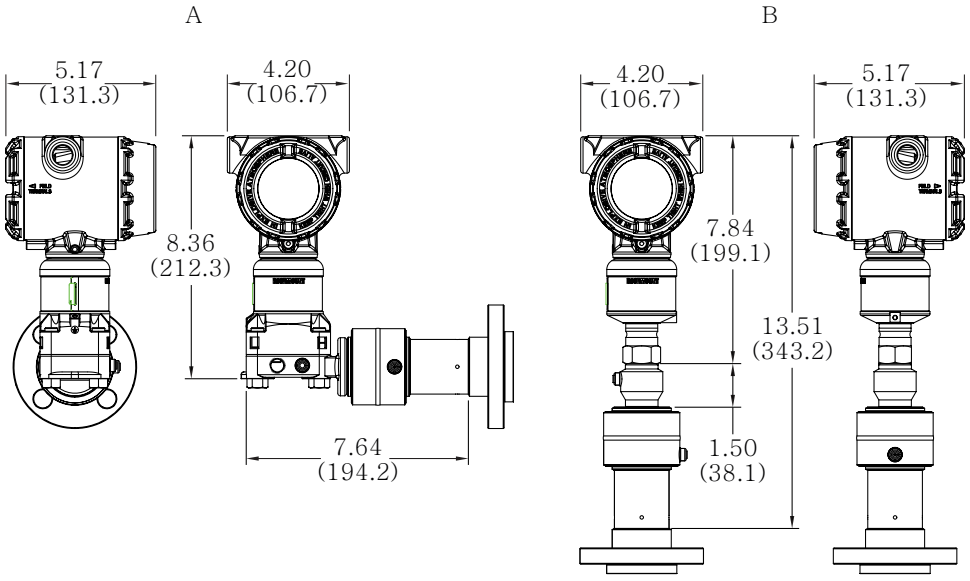

A. Coplanar
B. In-line

Accessories

Rosemount Engineering Assistant (EA) software packages

The Rosemount Engineering Assistant software supports flow configuration for the Rosemount 3051SMV. The package is available with or without modem and connecting cables. All configurations are packaged separately. For best performance of the EA software, the following computer hardware and software is recommended:

Note
Engineering Assistant version 6.1 or later requires the use of Microsoft®.NET Framework version 2.0 or later. If .NET version 2.0 is not currently installed, the software will be automatically installed during the Engineering Assistant installation. Microsoft.NET version 2.0 requires an additional 200 MB of disk space.

Minimum system requirements for Engineering Assistant 5.5.1 for the Rosemount 3051SMV FOUNDATION Fieldbus with fully compensated mass flow block

- Intel® Core™ Duo, 2.4 GHz
- Operating System: Windows™ 7, 32- or 64-bit
- 600 MB of available hard disk space
- USB port

Minimum system requirements for Engineering Assistant 6 for the Rosemount 3051SMV HART device

- Pentium®-grade Processor: 500 MHz or faster
- Operating System: Microsoft Windows 2000 (32-bit), Windows XP Professional (32-bit), Windows 7, or Windows 8
- 256 MB RAM
- 100 MB of available hard disk space
- RS232 serial port or USB port (for use with HART® modem)
- CD-ROM

Table 38: Engineering Assistant Software Packages

Code	Product description
EA	Engineering Assistant Software Program
Software media	
2	EA Rev. 5 (Compatible with Rosemount 3051SMV FOUNDATION Fieldbus, Rosemount 3095, and Rosemount 333)
3	EA Rev. 6 (Compatible with Rosemount 3051SMV HART only)
Language	
E	English
Modem and connecting cables	
0	None
H	Serial port HART modem and cables
B	USB port HART modem and cables
License	
N1	Single PC license
N2	Site license
Typical model number: EA 2 E 0 N1	

Accessories

Item description	Part number
Serial port HART modem and cables only	03095-5105-0001
USB port HART modem and cables only(1)	03095-5105-0002
Long-life power module for Wireless option	701PBKKF

(1) *Supported by SNAP-ON™ EA with AMS Device Manager version 6.2 or higher.*

00813-0100-4801
Rev. UW
April 2026

For more information: **Emerson.com/global**

©2026 Emerson. All rights reserved.

Emerson Terms and Conditions of Sale are available upon request. The Emerson logo is a trademark and service mark of Emerson Electric Co. Rosemount is a mark of one of the Emerson family of companies. All other marks are the property of their respective owners.

ROSEMOUNT™

EMERSON™