Product Data Sheet
00813-0300-4750, Rev CC
October 2022

Rosemount® 8750W Magnetic Flowmeter System

for Utility, Water, and Wastewater Applications



- Best in class value with performance, reliability, and diagnostics suited for monitoring applications
- Reliable all welded coil housing and lightweight sensor design rated to IP68
- Available in 4–20mA with HART®, FOUNDATION™ Fieldbus, Modbus® RS-485, Process Diagnostics, and SMART™ Meter Verification to improve reliability and performance
- Available with drinking water certifications

ROSEMOUNT™

EMERSON™

Product Selection Guide

The Rosemount 8750W Magnetic Flowmetersensor is available in a flanged style and transmitter is available in remote and integral transmitter configurations to ensure compatibility with all utility, water, and wastewater applications.

Transmitter selection

Transmitter	General characteristics
Field mount 	■ Integral and remote configurations available ■ HART/Analog and Pulse outputs available ■ FOUNDATION™ Fieldbus and pulse output available ■ Modbus RS-485 and Pulse output available ■ Advanced Diagnostics available ■ LCD display, optional (with optional optical switch local operator interface)(1) ■ Two discrete channels (optional)
Wall mount 	■ Wall mount configuration ■ HART/Analog and Pulse outputs available ■ Modbus RS-485 and Pulse output available ■ FOUNDATION™ Fieldbus and pulse output available ■ Advanced Diagnostics available ■ Local LCD display, optional (with optional 15 button tactile key pad (1)) ■ Two discrete channels, optional

(1) *HART or Modbus protocol only.*

Contents

Product Selection Guide 2
Magmeter Diagnostics 3
Magnetic flow meter sizing 4
Ordering information 7
Product specifications 17
Product certifications 33
Dimensional drawings 33

Sensor selection

Table 1: Sensor Selection

Sensor	General characteristics
Flanged 	■ Flanged process connections Welded coil housing ■ ½-in. (15 mm) to 48-in. (1200 mm) ■ Standard, reference, and bullet-nose electrodes available

Selecting materials

For guidance on selecting materials, refer to the *Rosemount™ Magnetic Flowmeter Material Selection Guide (00816-0100-3033)* , available at www.emerson.com/rosemount.

Access information when you need it with asset tags

Newly shipped devices include a unique QR code asset tag that enables you to access serialized information directly from the device. With this capability, you can:

- Access device drawings, diagrams, technical documentation, and troubleshooting information in your MyEmerson account
- Improve mean time to repair and maintain efficiency
- Ensure confidence that you have located the correct device
- Eliminate the time-consuming process of locating and transcribing nameplates to view asset information

Magmeter Diagnostics

Rosemount diagnostics reduce cost & improve output by enabling new practices

Rosemount Magnetic Flowmeters provide device diagnostics that detect and warn of abnormal situations throughout the life of the meter - from installation to maintenance and meter verification. With Rosemount Magnetic Flowmeter diagnostics enabled, plant availability and throughput can be improved, and costs through simplified installation, maintenance and troubleshooting can be reduced.

Table 2: Magnetic flowmeter diagnostics

Diagnostic name	Diagnostic category	Product capability
Basic diagnostics		
Grounding and Wiring Fault	Installation	Standard
Tunable Empty Pipe	Process	Standard
Electronics Temperature	Meter Health	Standard
Coil Fault	Meter Health	Standard
Transmitter Fault	Meter Health	Standard

Table 2: Magnetic flowmeter diagnostics *(continued)*

Diagnostic name	Diagnostic category	Product capability
Reverse Flow	Process	Standard
Coil current	Maintenance	Standard
Electrode saturation	Process/Maintenance	Standard
Advanced diagnostics		
High Process Noise	Process	Suite 1 (DA1)
Coated Electrode Detection	Process	Suite 1 (DA1)
Commanded Smart Meter Verification	Meter Health	Suite 2 (DA2)
Continuous Smart Meter Verification	Meter Health	Suite 2 (DA2)
4-20 mA Loop Verification(1)	Installation	Suite 2 (DA2)

(1) *Available with HART output only.*

Options for accessing diagnostics

Rosemount Magmeter Diagnostics can be accessed through the Local Operator Interface (LOI), ProLink® III v3.1, a HART Field Communicator(1), and AMS® Suite: Intelligent Device Manager(1). Contact your local Rosemount representative to activate diagnostics or for diagnostic availability on existing transmitters.

Access diagnostics through the LOI for quicker installation, maintenance, and meter verification

Rosemount Magnetic Flowmeter Diagnostics are available through the LOI to simplify maintenance.

Access diagnostics through ProLink III v. 3.0 (HART)/ProLink III v. 3.1 (HART, Modbus)

Simplify maintenance and troubleshooting practices by utilizing ProLink III v3.0/v3.1 to access diagnostics and troubleshooting information, log variable data, run SMART Meter Verification, and print verification reports.

Access diagnostics through AMS Intelligent Device Manager(1) for the ultimate value

The value of the diagnostics increases significantly when AMS Intelligent Device Manager is used. AMS Intelligent Device Manager provides a simplified screen flow and procedures for how to respond to the diagnostic messages.

Magnetic flow meter sizing

Selecting the appropriate sensor size is an important step when considering a magnetic flow meter. The physical properties of the process fluid, as well as the fluid velocity should be considered. It may be necessary to select a flow sensor that is larger or smaller than the adjacent piping to ensure the fluid velocity is in the recommended flow range for the application.

Table 3: Sizing guidelines

Application	Velocity range (ft/s)	Velocity range (m/s)
Full Range	0 to 39	0 to 12
Preferred Service	2 to 20	0.6 to 6.1
Abrasive Slurries	3 to 10	0.9 to 3.1
Non-Abrasive Slurries	5 to 15	1.5 to 4.6

(1) Available with HART output only.

Note
Operation outside these guidelines may also give acceptable performance.

To convert flow rate to velocity, use the appropriate factor listed in Table 4 and the following equation:

$$\text{Velocity} = \frac{\text{Flow Rate}}{\text{Factor}}$$

Example: English units	Example: SI units
Magmeter Size: 4 in. (factor from Table 4 = 39.679) Normal Flow Rate: 300 GPM $\text{Velocity} = \frac{300\ (\text{gpm})}{39.679}$ **Velocity = 7.56 ft/s**	Magmeter Size: 100 mm (factor from Table 4 = 492.78) Normal Flow Rate: 800 L/min $\text{Velocity} = \frac{800\ (\text{L/min})}{492.78}$ **Velocity = 1.62 m/s**

Table 4: Line size vs. conversion factor

Nominal line size—Inches (mm)	Gallons per minute factor	Liters per minute factor
½ (15)	0.947	11.762
1 (25)	2.694	33.455
1½ (40)	6.345	78.806
2 (50)	10.459	129.89
2 ½ (65)	14.923	185.33
3 (80)	23.042	286.17
4 (100)	39.679	492.78
5 (125)	62.356	774.42
6 (150)	90.048	1,118.3
8 (200)	155.93	1,936.5
10 (250)	245.78	3,052.4
12 (300)	352.51	4,378.0
14 (350)	421.70	5,237.3
16 (400)	550.80	6,840.6
18 (450)	697.19	8,658.6
20 (500)	866.51	10,761
24 (600)	1,253.2	15,564
30 (750)	2006.0	24,913
36 (900)	2,935.0	36,451
40 (1000)	3,652.1	45,357
42 (1050)	4,115.1	51,107
48 (1200)	5,407.6	67,159

Table 5: Line size vs. velocity/rate

Nominal line size in inches (mm)	Minimum/maximum flow rate							
	Gallons per minute				Liters per minute			
	at 0.04 ft/s (low-flow cutoff)	at 1 ft/s (min range setting)	at 3 ft/s	at 39.37 ft/s (max range setting)	at 0.012 m/s (low-flow cutoff)	at 0.3 m/s (min range setting)	at 1 m/s	at 12 m/s (max range setting)
½ (15)	0.038	0.947	2.841	37.287	0.141	3.529	11.76	141.15
1 (25)	0.108	2.694	8.081	106.05	0.401	10.04	33.45	401.46
1½ (40)	0.254	6.345	19.04	249.82	0.946	23.64	78.81	945.67
2 (50)	0.418	10.459	31.38	411.77	1.559	38.97	129.89	1,558.7
2½ (65)	0.597	14.923	44.77	587.51	2.224	55.60	185.33	2,224.0
3 (80)	0.922	23.042	69.13	907.17	3.434	85.85	286.17	3,434.0
4 (100)	1.587	39.679	119.04	1,562.2	5.913	147.84	492.78	5,913.4
5 (125)	2.494	62.356	187.07	2,454.9	9.293	232.33	774.42	9,293.0
6 (150)	3.602	90.048	270.14	3,545.2	13.42	335.50	1,118.3	13,420
8 (200)	6.237	155.93	467.79	6,138.9	23.24	580.96	1,936.5	23,238
10 (250)	9.831	245.78	737.34	9,676.3	36.63	915.73	3,052.4	36,629
12 (300)	14.10	352.51	1,057.5	13,878	52.54	1,313.4	4,378.0	52,535
14 (350)	16.87	421.71	1,265.1	16,603	62.85	1,571.2	5,237.3	62,848
16 (400)	22.03	550.80	1,652.4	21,685	82.09	2,052.2	6,840.6	82,087
18 (450)	27.89	697.19	2,091.6	27,448	103.90	2,597.6	8,658.6	103,903
20 (500)	34.66	866.51	2,599.5	34,114	129.14	3,228.4	10,761	129,137
24 (600)	50.13	1,253.2	3,759.6	49,339	186.77	4,669.2	15,564	186,769
30 (750)	80.24	2,006.0	6,018.0	78,976	298.96	7,474.0	24,913	298,959
36 (900)	117.40	2,935.0	8,805.1	115,553	437.42	10,935	36,451	437,416
40 (1000)	146.09	3,652.1	10,956	143,785	544.29	13,607	45,357	544,286
42 (1050)	164.60	4,115.1	12,345	162,011	613.28	15,332	51,107	613,278
48 (1200)	216.30	5,407.6	16,223	212.898	805.91	20,148	67,159	805,908

Upstream and downstream piping

To ensure specified accuracy over widely varying process conditions, it is recommended to install the sensor with a minimum of five straight pipe diameters upstream and two pipe diameters downstream from the electrode plane.

Figure 1: Upstream and downstream straight pipe diameters

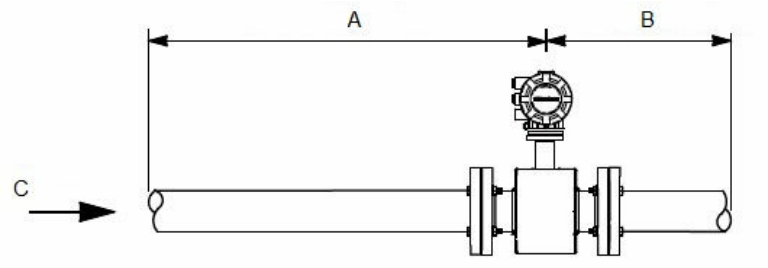

A. *Five pipe diameters (upstream)*
B. *Two pipe diameters (downstream)*
C. *Flow direction*

Installations with reduced upstream and downstream straight runs are possible. In reduced straight run installations, the meter may not meet accuracy specifications. Reported flow rates will still be highly repeatable.

Sensor process reference grounding

In addition to grounding required by applicable safety/electrical standards or codes, a reliable ground path is required between the sensor and the process fluid. Optional grounding rings or process reference electrodes are available with the sensor to ensure proper grounding. See Table 5 and Table 6.

Ordering information

Rosemount 8750W Magnetic Flowmeter Platform



The Rosemount 8750W Magnetic Flowmeter is available in a flanged sensor design. The sensors are fabricated from stainless and carbon steel and welded to provide a sealed coil housing that protects against moisture or other contaminants. Sizes range from ½ inch (15 mm) to 48 inch (1200 mm). The field mount transmitter has a die cast aluminum housing for excellent reliability. The wall mount transmitter features an easy to use operator interface. Both transmitter styles are available with advanced diagnostics to provide the best insight into the process and the meter's health.

Model code structure

Figure 2: Guide to model code structure

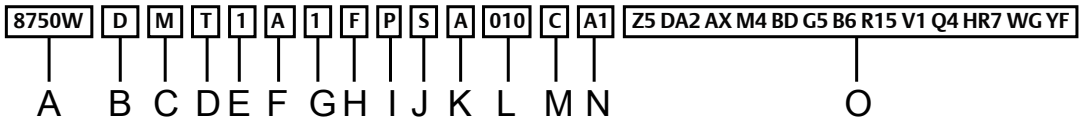

A	Base model—Magnetic Flowmeter System (utility, water, and wastewater)		
B	Sensor design revision	I	Lining material
C	Transmitter class	J	Electrode material
D	Transmitter mount	K	Electrode type
E	Transmitter power	L	Line size
F	Transmitter outputs	M	Flange type and material
G	Conduit entries	N	Flange rating
H	Sensor style	O	Options

Example model code with one selection out of each required category:

8750W D M T 1 A 1 F P S A 010 CA1 Z5 DA2 AX M4 BO G5 B6 R15 V1 Q4 HR7 WG YF

The starred (★) offerings represent the best delivery options.

Requirements

Table 6: Requirements - select one from each available choice

Code	Description	
Transmitter class		
M	Revision 4 electronics	★
0	Spare sensor, no transmitter	
Transmitter mount		
T	Integral field mount	★
R	Remote field mount	★
W	Remote wall mount	★
Transmitter power		
1	AC Power Supply (90–250VAC, 50/60Hz)	★
2	DC Power Supply (12–42VDC)	★
0	Spare sensor, no transmitter	

Table 6: Requirements - select one from each available choice *(continued)*

Code	Description			
Transmitter outputs				
A	4–20mA output with digital HART protocol & scalable pulse output			★
F	FOUNDATION™ Fieldbus & scalable pulse output			★
M	Modbus RS-485 electronics, scalable pulse			★
0	Spare sensor, no transmitter			
Conduit entries				
Code	**Type**	**Integral mount quantity**	**Remote mount quantity**	
1	½–14 NPT	2	4	★
2	M20–1.5 adapters	2	4	★
4(1)	½–14 NPT, additional entry	3	5	
5(1)	M20–1.5, additional entry	3	5	
0	Spare sensor, integral mount only, no transmitter	N/A	N/A	
Sensor style				
F	Flanged			★
0	Spare transmitter, no sensor			
Lining material				
T(2)	PTFE			★
P(3)	Polyurethane			★
N(4)	Neoprene			★
0	Spare transmitter, no sensor			
Electrode material				
S	316L stainless steel			★
H	Nickel alloy 276 (UNS N 10276)			★
0	Spare transmitter, no sensor			
Electrode type				
A	2 Measurement electrodes – standard			★
B(5)	2 Measurement electrodes – bulletnose			★
E	2 Measurement electrodes plus 1 reference electrode – standard			★
F(5)	2 Measurement electrodes plus 1 reference electrode – bulletnose			★
0	Spare transmitter, no sensor			

Table 6: Requirements - select one from each available choice *(continued)*

Code	Description			
Line size		**Liner availability[6]**		
		PTFE code T	**Poly code P**	**Neoprene code N**
005	½-in. (15 mm)	★		
010	1-in. (25 mm)	★	★	★
015	1½-in. (40 mm)	★	★	★
020	2-in. (50 mm)	★	★	★
025	2½-in. (65 mm)	★		★
030	3-in. (80 mm)	★	★	★
040	4-in. (100 mm)	★	★	★
050	5-in. (125 mm)	★		★
060	6-in. (150 mm)	★	★	★
080	8-in. (200 mm)	★	★	★
100	10-in. (250 mm)	★	★	★
120	12-in. (300 mm)	★	★	★
140	14-in. (350 mm)	★	★	★
160	16-in. (400 mm)	★	★	★
180	18-in. (450 mm)	★	★	★
200	20-in. (500 mm)	★	★	★
240	24-in. (600 mm)	★	★	★
300	30-in. (750 mm)	★	★	★
360	36-in. (900 mm)	★	★	★
400	40-in. (1000 mm)			★
420	42-in. (1050 mm)		★	★
480	48-in. (1200 mm)		★	★
000	Spare transmitter, no sensor			
Flange type - see Table 8 for line size vs. flange type and rating				
C	Slip-on,raised-face, carbon steel			★
S	Slip-on,raised-face, 304/304L SST			★
F	Slip-on, flat-face, carbon steel			
G	Slip-on,flat-face, 304/304L SST			
0	Spare transmitter, no sensor			

Table 6: Requirements - select one from each available choice *(continued)*

Code	Description
Flange rating - see Table 8 for line size vs. flange type and rating	
A1	ASME B16.5, Class 150
A3	ASME B16.5, Class 300
AD	AWWA C207Class D; line size 30-in. and above; flat face flange only
AE	AWWA C207Class E; line size 30-in. and above; flat face flange only
DD	EN1092-1,PN10
DE	EN1092-1,PN16
DF	EN 1092-1, PN25
DH	EN 1092-1, PN40
GD	GB/T9119,PN10
GE	GB/T9119,PN16
GH	GB/T9119,PN40
JP	JISB2220, 10K
JR	JISB2220, 20K
KU	AS4087, PN16
KW	AS4087, PN21
KY	AS4087, PN35
TK	AS2129, Table D
TL	AS2129, Table E
00	Spare transmitter, no sensor

(1) *Not available with the wall mount transmitter.*
(2) *Available in ½ - to 36-in. (15 mm to 900 mm) line sizes.*
(3) *Available in line sizes 1- to 36-in., 42-in., and 48-in. (25 mm to 900 mm, 1050 mm, and 1200 mm) line sizes.*
(4) *Available in line sizes 1- to 48-in. (25 mm to 1200 mm) line sizes.*
(5) *Not available in ½-in. (15mm).*
(6) *In the Line size section, the starred (★) offerings represent available liner based on line size. Consult factory for additional Flange Type/Rating sensor availability*

Options

Note
These are not required, but they must be included in the model number if desired.

Table 7: Rosemount 8750W options

Code	Description	
Hazardous area certifications		
-[1]	Ordinary Locations - (no code required)	★
Z5	US Approvals, Class I Div 2, Non-Incendive and Dust for Non-Flammable Fluids	★
Z6	Canadian Approvals, Class I Div 2, Non-Incendive and Dust for Non-Flammable Fluids	★
ND	ATEX Dust	★
Z1[2]	ATEX Non-Sparking and Dust for Non-Flammable Fluids	★
NF	IECEx Dust	★
Z7[2]	IECEx Non-Sparking and Dust for Non-Flammable Fluids	★
Z2[2]	INMETRO Non-Sparking and Dust for Non-Flammable Fluids	★
Z3[2]	NEPSI Non-Sparking and Dust for Non-Flammable Fluids	★
Advanced diagnostics		
DA1	Process Diagnostics, High Process Noise Detection, and Electrode Coating	★
DA2	Smart Meter Verification	★
Discrete input/discrete output		
AX[3][4]	Two Discrete Channels (DI/DO 1, DO 2)	★
Display		
M4[5]	LCD with Local Operator Interface	★
M5	LCD display only	
Certifications		
PD	European Pressure Equipment Directive Certification (PED)	★
CR	Canadian Registration Number (CRN) Certification	
BD	ASME B31.3 Process Piping Standard	
DW[6]	NSF DrinkingWater Certification	
Grounding rings		
G1	316L stainless steel (Qty 2)	★
G2	Nickel alloy C-276; UNS N 10276 (Qty 2)	
G5	316L stainless steel (Qty 1)	★
G6	Nickel alloy C-276; UNS N 10276 (Qty 1)	
Miscellaneous		
C1	Custom Configuration (completed CDS form required with order)	
D1	High Accuracy Calibration (base ref accuracy 0.2% of rate)	
B6	316 SST Mounting Bracket with U-bolt Kit for 2-in. Pipe Mount	
P05[7]	5-point verification	
P10[8]	10-point verification	

Table 7: Rosemount 8750W options *(continued)*

Code	Description	
Submergence protection		
R05	Potted junction box with 50 feet of combo cable/cable gland for use in conduit	
R10	Potted junction box with 100 feet of combo cable/cable gland for use in conduit	
R15	Potted junction box with 150 feet of combo cable/cable gland for use in conduit	
R20	Potted junction box with 200 feet of combo cable/cable gland for use in conduit	
R25	Potted junction box with 250 feet of combo cable/cable gland for use in conduit	
R30	Potted junction box with 300 feet of combo cable/cable gland for use in conduit	
S05	Potted junction box with 50 feet of submersible combo cable/cable gland	
S10	Potted junction box with 100 feet of submersible combo cable/cable gland	
S15	Potted junction box with 150 feet of submersible combo cable/cable gland	
S20	Potted junction box with 200 feet of submersible combo cable/cable gland	
S25	Potted junction box with 250 feet of submersible combo cable/cable gland	
S30	Potted junction box with 300 feet of submersible combo cable/cable gland	
Special paint		
V1	Coal tar paint (submersible/direct burial)	
Quality certificates		
Q4	Calibration certificate per ISO 10474 3.1/EN 10204 3.1	
Q8	Material traceability per ISO 10474 3.1/EN 10204 3.1	
Revision configuration		
HR7	HART Revision 7	
Witness inspection		
WG	Witness Inspection	
Quick Start Guide language		
YF	French	★
YG	German	★
YI	Italian	★
YM	Chinese (Mandarin)	★
YP	Portuguese (Brazil)	★
YR	Russian	★
YS	Spanish	★

(1) *CSA (C/US) marked, CE marked, EAC marked and C-tick marked.*
(2) *DC power only.*
(3) *Requires Conduit Entry code 4 or 5 when ordered with field mount transmitter.*
(4) *Not available with FOUNDATION Fieldbus (output code F).*
(5) *Not available with FOUNDATION Fieldbus (output code F).*
(6) *NSF drinking water certification is available with the PTFE liner in line sizes 0.5- to 36-in (15 mm to 900 mm) and the polyurethane liner in line sizes 4-to 36-in., 42-in., and 48-in. (80 mm to 900 mm, 1050 mm, and 1200 mm).*

(7) *Available for ½ - to 24-in (15 mm to 600 mm) at velocities 1, 3, 5, 7, 10 ft/s; 30-in. (700 mm) at velocities 1, 3, 5, 7, 8 ft/s; 36-in. (900 mm) at velocities 1, 2, 3, 5, 6 ft/s; 40- to 48-in.(1000mm to 1200mm) not available.*

(8) *Available for ½ - to 24-in. (15 mm to 600 mm) at velocities 1, 2, 3, 4, 5, 6, 7, 8, 9, 10 ft/s; 30- to 48-in. (700 mm to 1200 mm) not available.*

Table 8: Slip on flange options by line size

	Flange code and rating																	
	A1	**A3**	**AD**	**AE**	**DD**	**DE**	**DF**	**DH**	**GD**	**GE**	**GH**	**JP**	**JR**	**KU**	**KW**	**KY**	**TK**	**TL**
Size code	ASME Class 150	ASME Class 300	AWWA Class D	AWWA Class E	EN PN10	EN PN16	EN PN25	EN PN40	GB/T PN 10	GB/T PN 16	GB/T PN 40	JIS 10K	JIS 20K	AS4087 PN16	AS4087 PN21	AS4087 PN35	AS2129 Table D	AS2129 Table E
005	★	★						★			★	★	★				★	★
010	★	★						★			★	★	★				★	★
015	★	★						★			★	★	★				★	★
020	★	★				★		★			★	★	★	★	★	★	★	★
025	★	★				★		★			★	★	★	★	★	★	★	★
030	★	★				★		★			★	★	★	★	★	★	★	★
040	★	★				★		★		★	★	★	★	★	★	★	★	★
050	★	★				★		★		★	★	★	★	★	★	★	★	★
060	★	★				★		★		★	★	★	★	★	★	★	★	★
080	★	★			★	★	★	★	★	★	★	★	★				★	★
100	★	★			★	★	★	★	★	★	★	★	★	★	★	★	★	★
120	★	★			★	★	★	★	★	★	★	★	★	★	★	★	★	★
140	★	★			★	★	★	★	★	★	★	★	★	★	★	★	★	★
160	★	★			★	★	★	★	★	★	★	★	★	★	★	★	★	★
180	★	★			★	★	★	★	★	★	★	★	★	★	★	★	★	★
200	★	★			★	★	★	★	★	★	★	★	★	★	★	★	★	★
240	★	★			★	★	★	★	★	★	★	★	★	★	★	★	★	★
300			★	★										★	★	★	★	★
360			★	★	★	★			★	★				★	★	★	★	★
400			★	★	★	★			★	★				★	★		★	★
420			★	★														
480			★	★	★												★	★

Ordering flowmeter equipment

Ordering procedure

To order, select the desired sensor and/or transmitter by specifying model codes from the ordering table.

For remote transmitter applications, note the cable specification requirements.

Standard configuration

Unless the Configuration Data Sheet is completed, the transmitter will be shipped as follows:

Engineering units:	ft/sec
4mA:	0
20mA:	30
Sensor size:	3-in.
Empty pipe:	On
Sensor calibration number:	1000005010000000

Integrally mounted transmitters are factory configured with the paired sensor size and appropriate calibration number.

Custom configuration (option code C1)

If Option Code C1 is ordered, the Configuration Data Sheet (CDS) must be submitted at the time of order.

Standard tagging

Instrument tags for the transmitter and sensors are as follows:

- 316SST laser etched label, permanently attached
- Main label - Tag name: 1 line 21 characters
- Additional 316SST 'wire-on' tag available: 5 lines, 17 characters per line (6 mm height)

Interconnecting cable

Interconnecting cables are required to connect a remote mount transmitter to the sensor. When ordering cable, review the hazardous area approval requirements and the installation location requirements for proper cable selection.

- Cables can be ordered as individual component cables or a combination coil drive/electrode cable.
- Cables can be ordered as part of the transmitter model number or as a spare parts kit. Integrally mounted transmitters are factory wired and do not require additional interconnecting cables.
- Individual component cables require equal lengths of coil drive cable and electrode cable and should be limited to less than 500 feet (152 m). Consult an Emerson Flow representative (see back page) for lengths between 500-1000 feet (152-300 m).
- Combination coil drive/electrode cable is only available for Ordinary Locations and should be limited to less than 330 feet (100 m).

Component cable kits

Standard temp (-20 °C to 75 °C)				
Cable kit #	Description	Component	Alpha direct p/n	Alpha equivalent
08732-0065-0001 (feet)	Kit, Component Cables, Std Temp, (includes Coil and Electrode)	Coil	518243	2442C
		Electrode	518245	2413C
08732-0065-0002 (meters)	Kit, Component Cables, Std Temp (includes Coil and Electrode)	Coil	Not available	Not available
		Electrode	Not available	Not available
08732-0065-0003 (feet)	Kit, Component Cables, Std Temp (includes Coil and I. S. Electrode)	Coil	518243	Not available
		I. S. Electrode	518244	Not available
08732-0065-0004 (meters)	Kit, Component Cables, Std Temp (includes Coil and I. S. Electrode)	Coil	Not available	Not available
		I.S. Electrode	Not available	Not available

Extended temp (-50 °C to 125 °C)				
Cable kit #	Description	Component	Alpha direct p/n	Alpha equivalent
08732-0065-1001 (feet)	Kit, Component Cables, Ext Temp (includes Coil and Electrode)	Coil	840310	Not available
		Electrode	518189	Not available
08732-0065-1002 (meters)	Kit, Component Cables, Ext Temp (includes Coil and Electrode)	Coil	Not available	Not available
		Electrode	Not available	Not available
08732-0065-1003 (feet)	Kit, Component Cables, Ext Temp (includes Coil and I. S. Electrode)	Coil	840310	Not available
		I. S. Electrode	840309	Not available
08732-0065-1004 (meters)	Kit, Component Cables, Ext Temp (includes Coil and I. S. Electrode)	Coil	Not available	Not available
		I.S. Electrode	Not available	Not available

Combo cable kits

Coil/electrode cable (-20 °C to 80 °C)	
Cable Kit #(1)	
08732-0065-2001 (feet)	Kit, Combo Cable, Standard
08732-0065-2002 (meters)	
08732-0065-3001 (feet)	Kit, Combo Cable, Submersible(2)
08732-0065-3002 (meters)	

(1) *Only available for Ordinary Locations.*
(2) *80 °C dry/60 °C wet/33ft continuous submergence.*

Product specifications

Basic specifications

The tables below outline some of the basic performance, physical, and functional specifications.

Table 9: Wall mount transmitter Specifications

	Style	Wall mount
	Base accuracy(1)	0.5% Standard 0.2% High Accuracy Option
	Mounting	Remote
	Power supply	Global AC or DC
	User interface	LCD display with 15 button tactile keypad (optional) LCD display only (optional) No display (standard)
	Communication protocol	HART with 4–20mA FOUNDATION™ fieldbus Modbus RS-485
	Diagnostics	Basic, DA1, DA2
	Sensor compatibility	All Rosemount plus other manufacturers
	Detailed specifications	Transmitter specifications
	Ordering information	Ordering information

(1) *For complete accuracy specifications, please refer to Transmitter functional specifications.*

Table 10: Field mount transmitter specifications

	Style	Field mount
	Base accuracy(1)	0.5% Standard 0.2% High Accuracy Option
	Mounting	Integral or Remote
	Power supply	Global AC or DC
	User interface	LCD display with 4 Optical Switch LOI (optional) LCD display only (optional) No display (standard)
	Communication protocol	HART FOUNDATION™ fieldbus Modbus RS-485
	Diagnostics	Basic, DA1, DA2
	Sensor compatibility	All Rosemount plus other manufacturers
	Detailed specifications	Transmitter specifications
	Ordering information	Ordering information

(1) *For complete accuracy specifications, please refer to Transmitter functional specifications.*

Table 11: Sensor specifications

	Style	Flanged
	Base accuracy(1)	0.5% Standard 0.25% High Accuracy Option
	Line sizes	½-in. to 48-in. (15 mm to 1200 mm)
	Design features	Standard Process Design
	Detailed specifications	Sensor specifications
	Ordering information	Ordering information

(1) *For complete accuracy specifications, refer to the sensor detailed specifications.*

Table 12: Lining Material Selection

Liner material	General characteristics
PTFE 	Process temperature: 0 to +248 °F (-18 to +120 °C)
Polyurethane 	Process temperature: 0 to +140 °F (-18 to +60 °C)
	Typically applied in clean water
Neoprene 	Typically applied in water with chemicals, and sea water
	Process temperature: 0 to 176 °F (-18 to 80 °C)

Table 13: Electrode Material

Electrode material	General characteristics
316L Stainless Steel	Good corrosion resistance
	Good abrasion resistance
Nickel Alloy 276 (UNS N10276)	Better corrosion resistance
	High strength

Table 14: Electrode Type

Electrode type	General characteristics
Standard Measurement	Lowest cost
	Good for most applications
Measurement + Reference Electrode	Low cost grounding option especially for large line sizes

Table 14: Electrode Type *(continued)*

Electrode type	General characteristics
(Also see Table 15 and Table 16 for grounding options and installation)	If using a reference electrode, process fluid must have a minimum conductivity of 100 microSiemens/cm
	Not recommended for electrolytic or galvanic corrosion applications
Bulletnose	Extended head protrudes into the flow stream for self-cleaning
	Best option for coating processes

Table 15: Process Reference Options

Grounding options	General characteristics
No Grounding Options (grounding straps)	Acceptable for conductive unlined pipe
	Grounding straps provided at no cost
Reference Electrode	Same material as measurement electrodes
	Sufficient grounding option when process fluid conductivity is greater than 100 microSiemens/cm
	Not recommended in electrolysis applications, galvanic corrosion applications, applications where the electrodes may coat, or non-conductive pipe.
Grounding Rings	Low conductivity process fluids
	Cathodic or electrolysis applications that may have stray currents in or around the process
	Variety of materials for process fluid compatibility

Table 16: Process Reference Installation

Type of pipe	Grounding straps	Grounding rings	Reference electrode	Lining protectors
Conductive unlined pipe	Acceptable	Not required	Not required	Not required
Conductive lined pipe	Not acceptable	Acceptable	Acceptable	Acceptable
Non-conductive pipe	Not acceptable	Acceptable	Not recommended	Acceptable

Transmitter specifications

Transmitter functional specifications

Transmitter coil drive current

500mA

Flow rate range

Capable of processing signals from fluids with velocities between 0.04 and 39 ft/s (0.01 to 12 m/s) for both forward and reverse flow in all sensor sizes. Full scale continuously adjustable between –39 and 39 ft/s (–12 to 12 m/s).

Conductivity limits

Process liquid must have a conductivity of 100 microSiemens/cm (100 micromhos/cm) or greater.

Power supply

- 90 - 250VAC @ 50/60Hz

- 12 - 42VDC

Line power fuses

- 90 - 250VAC systems:
  - 2 amp quick acting
  - Bussman AGC2 or equivalent
- 12 - 42VDC systems
  - 3 amp quick acting
  - Bussman AGC3 or equivalent

Power consumption

- 90 - 250VAC: 40VA maximum
- 12 - 42VDC: 15W maximum

Switch-on current

- At 250VAC: Maximum 35.7A (< 5ms)
- At 42VDC: Maximum 42A (< 5ms)

AC power supply requirements

Units powered by 90 - 250VAC have the following power requirements. Peak inrush is 35.7A at 250VAC supply, lasting approximately 1ms. Inrush for other supply voltages can be estimated with: Inrush (Amps) = Supply (Volts) / 7.0

Figure 3: AC current requirements

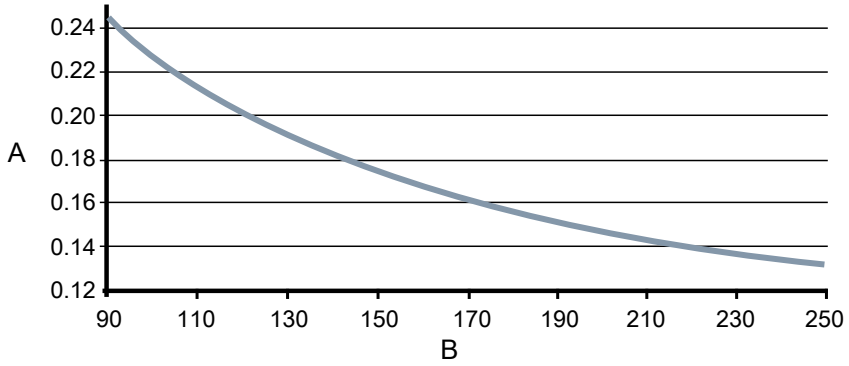

A. Supply current (amps)
B. Power supply (VAC)

Figure 4: Apparent power

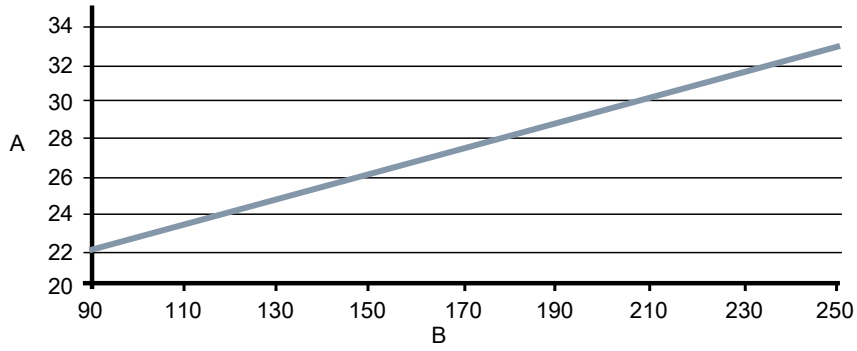

A. Apparent power (VA)
B. Power supply (VAC)

DC power supply requirements

Units powered by 12VDC power supply may draw up to 1.2A of current steady state. Peak inrush is 42A at 42VDC supply, lasting approximately 1ms. Inrush for other supply voltages can be estimated with: Inrush (Amps) = Supply (Volts) / 1.0

Figure 5: DC current requirements

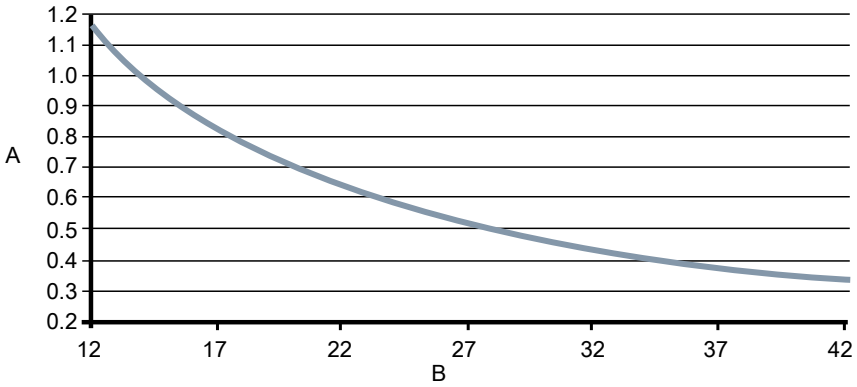

A. Supply current (amps)
B. Power supply (VDC)

Ambient temperature limits

- Operating:
  - –58 to 140 °F (–50 to 60 °C) without LOI/Display
  - –4 to 140 °F (–20 to 60 °C) with LOI/Display
  - The LOI/Display will not be visible at temperatures below -20 °C
- Storage:
  - –58 to 185 °F (–50 to 85 °C) without LOI/Display
  - –22 to 176 °F (–30 to 80 °C) with LOI/Display

Humidity limits

0–95% RH to 140 °F (60 °C)

Altitude

2000 meters maximum

Transient protection rating

Built in transient protection that conforms to:

- IEC 61000-4-4 for burst currents
- IEC 61000-4-5 for surge currents
- IEC 611185-2.2000, Class 3 up to 2kV and up to 2kA protection

Turn-on time

- 5 minutes to rated accuracy from power up
- 5 seconds from power interruption

Start-up time

50ms from zero flow

Low flow cut-off

Adjustable between 0.01 and 38.37 ft/s (0.003 and 11.7 m/s). Below selected value, output is driven to the zero flow rate signal level.

Overrange capability

Signal output will remain linear until 110% of upper range value or 44 ft/s (13 m/s). The signal output will remain constant above these values. Out of range message displayed on LOI/Display and the Field Communicator.

Damping

Adjustable between 0 and 256 seconds

Advanced diagnostics capabilities

Basic

- Ground/wiring fault
- Self test
- Transmitter faults
- Pulse output test
- Tunable empty pipe
- Reverse flow
- Coil circuit fault
- Electronics temperature

Process diagnostics (DA1)

- High process noise
- Electrode coating diagnostic

Smart Meter Verification (DA2)

- Smart Meter Verification (continuous or commanded)
- 4-20mA loop verification(1)

Output signals

Analog output adjustment (2)

4–20mA, switch-selectable as internally or externally powered.

Analog loop load limitations

- Internally powered 24VDC max, 500 ohms max loop resistance
- Externally powered 10.8 - 30VDC max.
- Loop resistance is determined by the voltage level of the external power supply at the transmitter terminals:

Figure 6: Analog loop load limitations

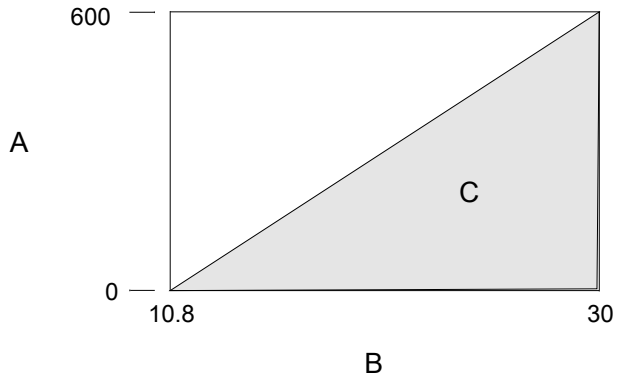

A. Load (ohms)
B. Power supply (volts)
C. Operating region

- $R_{max} = 31.25 (V_{ps} – 10.8)$
- V_{ps} = power supply voltage (volts)
- Rmax = maximum loop resistance (ohms)

The analog output is automatically scaled to provide 4mA at lower range value and 20mA at upper range value. Full scale continuously adjustable between -39 and 39 ft/s (-12 to 12 m/sec), 1 ft/s (0.3 m/s) minimum span.

HART Communications is a digital flow signal. The digital signal is superimposed on the 4–20mA signal and is available for the control system interface. A minimum of 250 ohms loop resistance is required for HART communications.

Analog alarm mode

High or low alarm signal is user-selectable via the Alarm switch on the front of the electronics. NAMUR-compliant alarm limits are software configurable and can be preset via CDS (C1). Individual diagnostic alarms are also software configurable. Alarms will drive the analog signal to the following mA values.

Low	3.75 mA	Requires CDS (C1)
High	22.50 mA	Factory default
NAMUR Low	3.5 mA	Requires CDS (C1)
NAMUR High	22.6 mA	Requires CDS (C1)

FOUNDATION™ Fieldbus output

Output signal	Manchester-encoded digital signal that conforms to IEC 1158-2 and ISA 50.02
Scheduled Entries	Seven (7)
Links	Twenty (20)

(2) For transmitters with intrinsically safe outputs (option code B), power must be supplied externally.

Virtual Communications Relationships (VCRs)	One (1) predefined (F6, F7) Nineteen (19) configurable
FISCO compliant	Reference appropriate 8732EM Apporvals QSG for details

FOUNDATION™ fieldbus function blocks

Table 17: Function block execution times

Block	Execution time (milliseconds)
Resource (RB)	—
Transducer (TB)	—
Analog Input (AI)	15
Proportional/Integral/Derivative (PID)	20
Integrator (INT)	25
Arithemetic (AR)	25
Discrete Output (DO)	15

Transducer Block	The transducer block calculates flow from the measured induced voltage. The calculation includes information related to the calibration number, line size, and diagnostics.
Resource Block	The resource block contains physical transmitter information, including available memory, manufacturer identification, device type, software tag, and unique identification.
Backup Link Active Scheduler (LAS)	The transmitter is classified as a device link master. A device link master can function as a Link Active Scheduler (LAS) if the current link master device fails or is removed from the segment. The host or other configuration tool is used to download the schedule for the application to the link master device. In the absence of a primary link master, the transmitter will claim the LAS and provide permanent control for the H1 segment.
Diagnostics	The transmitter automatically performs continuous self-diagnostics. The user can perform on-line testing of the transmitter digital signal. Advanced simulation diagnostics are available. This enables remote verification of the electronics via a flow signal generator built into the electronics. The sensor strength value can be used to view the process flow signal and provide information regarding filter settings.
Analog Input	The AI function block processes the measurement and makes it available to other function blocks. The AI function block also allows filtering, alarming, and engineering unit changes.
Arithmetic Block	Provides pre-defined application-based equations including flow with partial density compensation, electronic remote seals, hydrostatic tank gauging, ratio control and others.
Proportional/ Integral/Derivative	The PID function block provides a sophisticated implementation of the universal PID algorithm. The PID function block features input for feed forward control, alarms on the process variable, and control deviation. The PID type (series or Instrument Society of America [ISA]) is user-selectable on the derivative filter.
Integrator	The standard integrator block is available for totalization of flow.
	Reverse Flow Detects and reports reverse flow
	Software Lockout A write-lock switch and software lockout are provided in the resource function block.
	Totalizer Non-volatile totalizer for net, gross, forward and reverse totals.
Discrete Output	The DO function block processes a discrete setpoint and saves it to a specified channel to produce an output signal. The block supports mode control, output tracking, and simulation.

Modbus RS-485 output

Transmitters with a Modbus output provide an RS-485 signal to a Modbus host system; data rates can be configured from 1200 baud to 115.2 kilobaud.

Scalable pulse frequency adjustment

- 0-10,000Hz, switch-selectable as internally or externally powered [3]
- Pulse value can be set to equal desired volume in selected engineering units
- Pulse width adjustable from 0.1 to 650 ms
- Internally powered: Outputs up to 12VDC[4]
- Externally powered: Input 5 - 28VDC

Output testing

Analog output test [4]	Transmitter may be commanded to supply a specified current between 3.5 and 23mA.
Pulse output test	Transmitter may be commanded to supply a specified frequency between 1 and 10,000Hz.[3]

Optional discrete output function (AX option)

Externally powered at 5 - 28VDC, 240mA max, solid state switch closure to indicate either:

Reverse flow	Activates switch closure output when reverse flow is detected.
Zero flow	Activates switch closure output when flow goes to 0 ft/s or below low flow cutoff.
Empty pipe	Activates switch closure output when an empty pipe condition is detected.
Transmitter faults	Activates switch closure output when a transmitter fault is detected.
Flow limit 1, flow limit 2	Activates switch closure output when the transmitter measures a flow rate that meets the conditions established for this alert. There are two independent flow limit alerts that can be configured as discrete outputs.
Totalizer limit	Activates switch closure output when the transmitter measures a total flow that meets the conditions established for this alert.
Diagnostic status	Activates switch closure output when the transmitter detects a condition that meets the configured criteria of this output.

Optional discrete input function (AX option)

Externally powered at 5 - 28VDC, 1.4 - 20mA to activate switch closure to indicate either:

Reset Totalizer A (or B or C)	Resets Totalizer A (or B or C) value to zero.
Reset All Totals	Resets all totalizer values to zero.
Positive Zero Return (PZR)	Forces outputs of the transmitter to zero flow.

Security lockout

Security lockout switch on the electronics board can be set to deactivate all LOI and HART-based communicator functions to protect configuration variables from unwanted or accidental change.

LOI lockout

The display can be manually locked to prevent unintentional configuration changes. The display lock can be activated through a HART communication device, or by holding the UP arrow for 3 seconds and then following the on-screen instructions. When the display lock is activated, a lock symbol will appear in the lower right hand corner of the display. To deactivate the display lock, hold the UP arrow for 3 seconds and follow the on-screen instructions.

Display auto lock can be configured from the LOI with the following settings: OFF, 1 Minute, or 10 Minutes

(3) For transmitters with intrinsically safe outputs (option code B), frequency range is limited to 0-5000Hz and must be powered externally.
(4) For transmitters with intrinsically safe outputs (option code B), power must be supplied externally.

Sensor compensation

Rosemount sensors are calibrated in a flow lab at the factory and are assigned a calibration number. The calibration number must be entered into the transmitter, enabling interchangeability of sensors without calculations or a compromise in standard accuracy.

Transmitters and other manufacturers' sensors can be calibrated at known process conditions or at the Rosemount NIST-Traceable Flow Facility. Transmitters calibrated on site require a two-step procedure to match a known flow rate. This procedure can be found in the operations manual.

Performance specifications

System specifications are given using the frequency output and with the unit at reference conditions.

Accuracy

Includes the combined effects of linearity, hysteresis, and repeatability.

- Standard system accuracy:
  - ±0.5% of rate from 1 to 39 ft/s (0.3 to 12 m/s)
  - ±0.005 ft/s (0.0015 m/s) from the low flow cutoff to 1 ft/s (0.3 m/s)
- Optional high accuracy:(5)
  - ±0.2% of rate ±1.0 mm/sec from 2.5 to 39 ft/s (0.8 to 12 m/s)

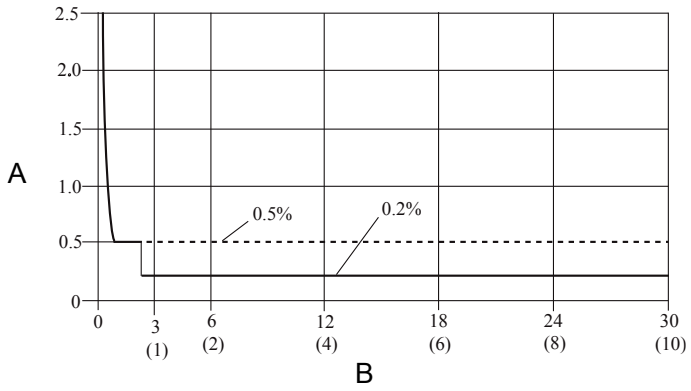

A. Percentage of rate
B. Velocity in ft/s (m/s)

Analog output effects

Analog output has the same accuracy as frequency output plus an additional ±4 μA at room temperature.

Repeatability	±0.1% of reading
Response time (analog output)	20 ms max response time to step change in input
Stability	±0.1% of rate over six months
Ambient temperature effect	±0.25% change over operating temperature range

(5) For sensor sizes greater than 12 in. (300 mm) the high accuracy is ±0.50% of rate from 2.5 to 39 ft/sec (0.8 to 12 m/sec).

Wall mount transmitter physical specifications

Materials of construction

Housing	Low copper aluminum Type 4X and IEC 60529 IP66, IP69
Paint	Polyurethane coat (1.8 to 2.2 mils thick)
Cover gaskets	Silicone

Electrical connections

Conduit entries	½–14 NPT or M20–1.5(1)
Terminal block screws	6-32 (No. 6) suitable for up to 14 AWG wire
Safety grounding screws	External stainless assembly, M5; internal 8-32 (No. 8)

(1) *M20–1.5 connections provided with an adapter.*

Vibration rating

2G per IEC 61298

Dimensions

See Dimensional drawings.

Weight

Wall mount transmitter	Approximately 11 lbs. (5 kg)

Add 1 pound (0.5 kg) for LOI/Display.

Field mount transmitter physical specifications

Materials of construction

Standard housing	Low copper aluminum Type 4X and IEC 60529 IP66/67/68/69(1)
Paint	Polyurethane coat (1.8 to 2.2 mils thick)
Cover gasket	Aluminum housing: Buna-N

(1) *For applications where the transmitter may be submerged, even temporarily, contact Emerson Flow Technical Support for details.*

Electrical connections

Conduit entries	Available in 1/2 inch NPT or M20. See ordering table footnotes for details
Terminal block screws	6-32 (No. 6) suitable for up to 14 AWG wire
Safety grounding screws	External stainless assembly, M5; internal 8-32 (No. 8)

Vibration rating

Integral mount	2G per IEC 61298
Remote mount	5G per IEC 61298

Dimensions

See Dimensional drawings.

Weight

Field mount transmitter only	Aluminum	Approximately 7 lbs. (3.2 kg)

Add 1 pound (0.5 kg) for LOI/Display.

Sensor specifications



Functional specifications

Service

Conductive liquids and slurries

Line sizes

½ inch to 48 inch (15 mm to 1200 mm)

Sensor coil resistance

2 - 20 Ω

Interchangeability

Rosemount 8750W sensors are interchangeable with 8750W transmitters. System accuracy is maintained regardless of line size or optional features. Each sensor nameplate has a sixteen-digit calibration number that can be entered into a transmitter during configuration.

Upper range limit

39.37 ft/s (12 m/s)

Ambient temperature limits

- –20 to 140 °F (–29 to 60 °C) standard carbon steel housing design

Pressure limits

See Process temperature limits.

Vacuum limits

PTFE lining	Full vacuum to +248 °F (+120 °C) through 4-in. (100 mm) line sizes. Consult an Emerson Flow representative (see back page) for vacuum applications with line sizes of 6 inches (150 mm) or larger.
All other standard sensor lining materials	Full vacuum to maximum material temperature limits for all available line sizes.

Submergence protection IP68

The remote mount sensor is rated IP68 for submergence to a depth of 33 ft (10 m) for a period of 48 hours. IP68 rating requires that the transmitter must be remote mount. Installer must use IP68 approved cable glands, conduit connections, and/or conduit plugs.

Conductivity limits

Process liquid must have a conductivity of 100 microSiemens/cm or greater. Consult an Emerson Flow representative (see back page), for conductivity less than 100 microSiemens/cm.

Process temperature limits

PTFE lining	0 to +248 °F (–18 to +120 °C)
Polyurethane lining	0 to +140 °F (–18 to +60 °C)
Neoprene lining	0 to +176 °F (–18 to +80 °C)

Notes

- Carbon steel flanges for PED have a minimum process temperature limit of 0 °C.
- Sensors ordered with hazardous location ratings may have different maximum process temperature limits. The sensors must be installed and used as directed by the installation drawing number noted on the serial nameplate.

Table 18: Temperature vs. Pressure Limits for ASME B16.5 class flanges (1)

Sensor temperature vs. pressure limits for ASME B16.5 class flanges (½ -in. to 24-in. Line Sizes)(2)					
Flange material	**Flange rating**	**Pressure**			
		@ -20 to 100 °F (-29 to 38 °C)	**@ 200 °F (93 °C)**	**@ 300 °F (149 °C)**	**@ 350 °F (177 °C)**
Carbon Steel	Class 150	285 psi	260 psi	230 psi	215 psi
	Class 300	740 psi	675 psi	655 psi	645 psi
304 Stainless Steel	Class 150	275 psi	235 psi	205 psi	190 psi
	Class 300	720 psi	600 psi	530 psi	500 psi

(1) *Liner temperature limits must also be considered.*
(2) *30-in. and 36-in. AWWA C207 Class D rated to 150 psi at atmospheric temperature.*

Table 19: Temperature vs. Pressure Limits for AS2129 Table D and E flanges (1)

Sensor temperature vs. pressure limits for AS2129 Table D and E flanges (4 inch to 24 inch line sizes)					
Flange Material	**Flange Rating**	**Pressure**			
		@ -29 to 50 °C (-20 to 122 °F)	**@ 100 °C (212 °F)**	**@ 150 °C (302 °F)**	**@ 200 °C (392 °F)**
Carbon Steel	D	101.6 psi	101.6 psi	101.6 psi	94.3 psi
	E	203.1 psi	203.1 psi	203.1 psi	188.6 psi

(1) *Liner temperature limits must also be considered.*

Table 20: Temperature vs. Pressure Limits for EN 1092-1 flanges (1)

Sensor temperature vs. pressure limits for EN 1092-1 flanges (15 mm to 600 mm Line Sizes)					
Flange material	**Flange rating**	**Pressure**			
		@ -29 to 50 °C (-20 to 122 °F)	**@ 100 °C (212 °F)**	**@ 150 °C (302 °F)**	**@ 175 °C (347 °F)**
Carbon Steel	PN 10	10 bar	10 bar	9.7 bar	9.5 bar
	PN 16	16 bar	16 bar	15.6 bar	15.3 bar
	PN 40	40 bar	40 bar	39.1 bar	38.5 bar
304 Stainless Steel	PN 10	9.1 bar	7.5 bar	6.8 bar	6.5 bar
	PN 16	14.7 bar	12.1 bar	11.0 bar	10.6 bar
	PN 40	36.8 bar	30.3 bar	27.5 bar	26.5 bar

(1) *Liner temperature limits must also be considered.*

Table 21: Temperature vs. Pressure Limits for GB/T 9119 Flanges (1)

Temperature vs. Pressure Limits for GB/T 9119 Flanges				
Flange material	**Flange rating**	**Pressure (Mpa)**		
		≤ 20 °C	**@ 100 °C (212 °F)**	**@ 150 °C (302 °F)**
Carbon steel Group 3E0	PN 10	1.00	0.92	0.88
	PN 16	1.60	1.48	1.40
	PN 40	4.00	3.71	3.52
304 SST Group 11E0	PN 10	1.00	0.90	0.81
	PN 16	1.60	1.45	1.31
	PN 40	4.00	3.63	3.27

(1) *Liner temperature limits must also be considered.*

Table 22: Temperature vs. Pressure Limits for JIS B2220 Flanges (1)

Temperature vs. Pressure Limits for JIS B2220 Flanges			
Flange material	**Flange rating**	**Pressure (Mpa)**	
		≤ 50 °C (122 °F)	**@ 120 °C (248 °F)**
Carbon steel	10K	1.4	1.4
Carbon steel	10K	1.4	1.4
Carbon steel	10K	1.4	1.4

(1) *Liner temperature limits must also be considered.*

Physical specifications

Emerson Rosemount magnetic flow meters are designed to the standards defined in ASME B31.3. This standard is used as the basis for all of our other pressure vessel certifications such as CRN and PED

Non-wetted materials

Sensor Pipe	Type 304/304L SST

Flanges	A105 Carbon steel, Type 304/304L SST(1)
Coil housing	Rolled carbon steel or 300 series stainless steel
Paint	Polyurethane coat (2.6 mils or greater)

(1) *Ambient temperature low limit for A105 carbon steel is –20 °F (–29 °C) per ANSI B16.5. For colder ambient environments, stainless steel flanges must be used.*

Process-wetted materials

Lining	PTFE, Polyurethane, Neoprene
Electrodes	316L SST, Nickel Alloy 276 (UNS N10276)

Flat-faced flanges

Flat-faced flanges are manufactured with full-face liners. Available in Neoprene only.

Process connections

ASME B16.5	■ Class 150 and Class 300: ½ inch to 24 inch (15 mm to 600 mm)
AWWA C207	■ Class D: 30 inch to 48 inch (750 mm to 1200 mm) ■ Class E: 30 inch to 48 inch (750 mm to 1200 mm)
EN 1092-1	■ PN10: 200 mm to 900 mm (8 inch to 36 inch) ■ PN16: 100 mm to 900 mm (4 inch to 36 inch) ■ PN16: 50 mm to 900 mm (2 inch to 36 inch) ■ PN25: 200 mm to 900 mm (8 inch to 36 inch) ■ PN40: 15 mm to 900 mm (½ inch to 36 inch)
AS2129	■ Table D and Table E: 15 mm to 900 mm (½ inch to 36 inch)
AS4087	■ PN16, PN21: 2 inch to 40 inch, 48 inch (8 inch excluded) (50 mm to 1000 mm, 1200 mm) ■ PN35: 2 inch to 36 inch (8 inch excluded) (50 mm to 900 mm)
GB/T9119	■ PN10: 8 and 24, 36, 40, 48 inch (200 mm to 600 mm, 900 mm, 1000 mm, 1200 mm) ■ PN16: 4 and 24, 36, 40 inch (100 mm to 600 mm, 900 mm, 1000 mm) ■ PN40: ½ to 24 inch (15 mm to 600 mm)
JIS B2220	■ 10K, 20K: ½ to 24 inch (15 mm to 600 mm)

Electrical connections

Conduit entries	Available with ½ inch NPT and M20
Terminal block screws	6-32 (No. 6) suitable for up to 14 AWG wire
Safety grounding screws	External stainless assembly, M5; internal 8-32 (No. 8)

Process reference electrode (optional)

A process reference electrode can be installed similarly to the measurement electrodes through the sensor lining. It will be made of the same material as the measurement electrodes.

Grounding rings (optional)

Grounding rings can be installed between the flange and the sensor face on both ends of the sensor. Single ground rings can be installed on either end of the sensor. They have an I.D. slightly larger than the sensor I.D. and an external tab to attach ground straps. Grounding rings are available in 316L SST, and Nickel Alloy 276 (UNS N10276). See Figure 5.

Dimensions

See Dimensional drawings.

Weight

See Table 23 through Table 30.

Product certifications

For detailed approval certification information and installation drawings, please see the appropriate document listed below:

- Document number 00825-MA00-0004: *Rosemount 8750W Approval Document - IECEx and ATEX*
- Document number 00825-MA00-0005: *Rosemount 8750W Approval Document – Class Division*
- Document number 00825-MA00-0006: *Rosemount 8750W Approval Document – North America Zone*

Dimensional drawings

Figure 7: Remote field mount transmitter

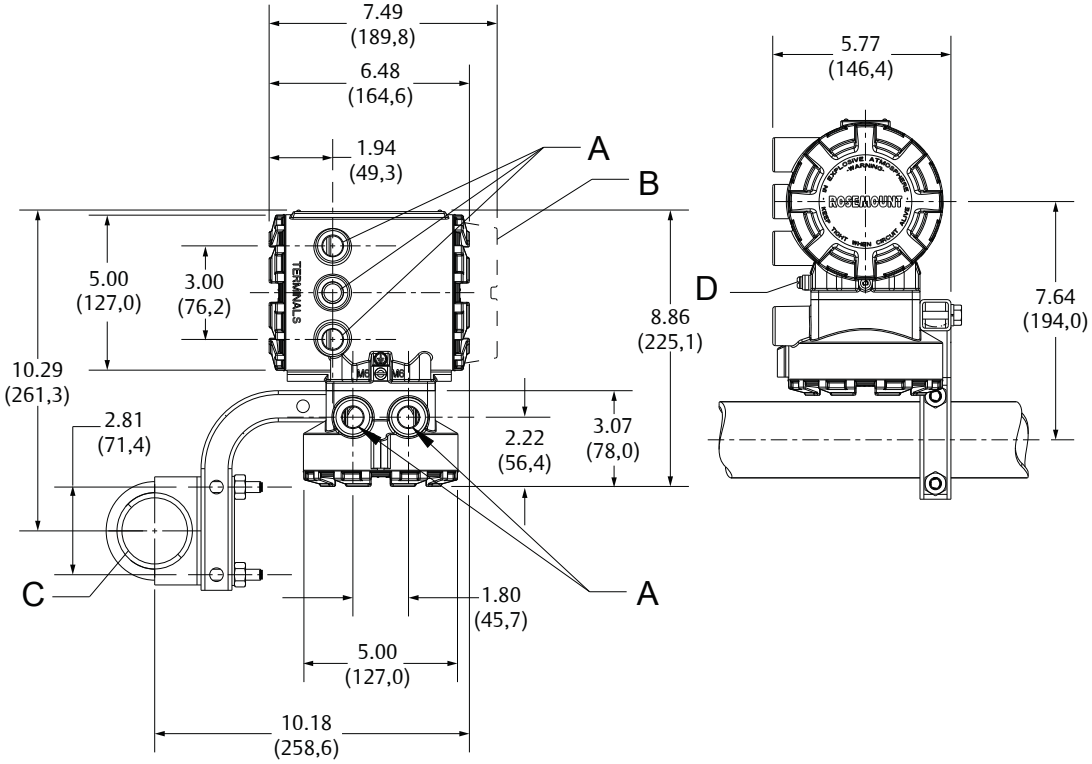

A. ½-in.–14 NPT or M20 conduit entry
B. LOI cover
C. 2-in. pipe bracket
D. Ground lug

Figure 8: Integral field mount transmitter

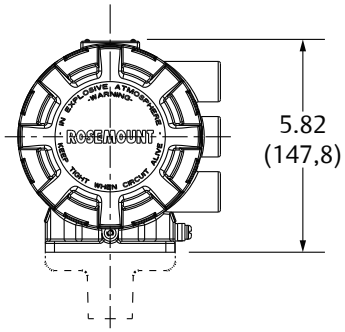

Figure 9: Wall mount transmitter with standard cover

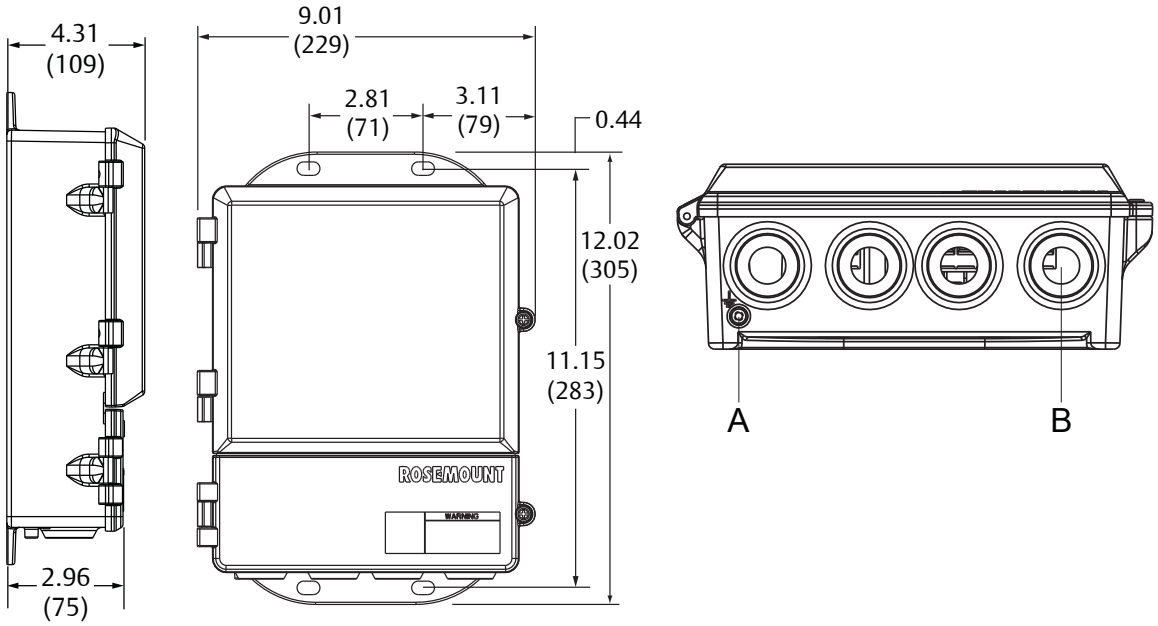

A. Ground lug
B. ½-in.–14 NPT conduit connection (four places)

Figure 10: Wall mount transmitter with LOI cover

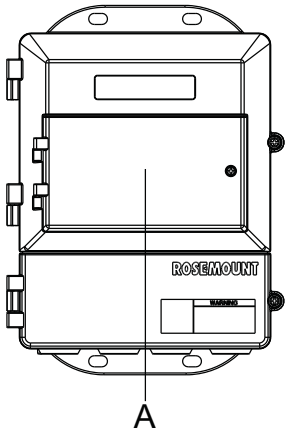

A. LOI Keypad cover

Figure 11: Raised face flanged sensor ½ - to 2½ -in. (15 mm to 65 mm)

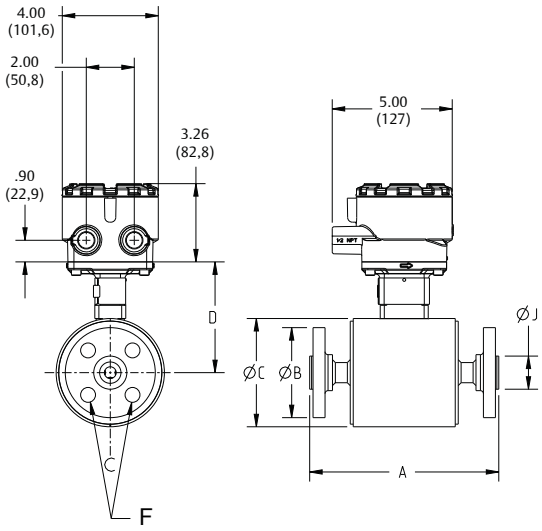

- F - Flange bolts to straddle center line

Table 23: Raised face flanged sensor ½ - to 2½ -in. (15 mm to 65 mm) dimensions

Size, description	Overall length			Dim B	Dim C	Dim D	Dim J	Flow tube wgt (lbs./ kg)
	Dim A PTFE	Dim A Neoprene	Dim A Poly					
0.5-in. (15 mm) ASME - 150, SO/RF	7.88 (200)	7.88 (200)	7.88 (200)	3.50 (89)	4.50 (114)	4.41 (112)	1.38 (35)	9 (4)
0.5-in. (15 mm) ASME - 300, SO/RF	7.88 (200)	7.88 (200)	7.88 (200)	3.74 (95)	4.50 (114)	4.41 (112)	1.38 (35)	10 (5)
0.5-in. (15 mm) EN 1092-1 - PN40, SO/RF	7.88 (200)	7.88 (200)	7.88 (200)	3.74 (95)	4.50 (114)	4.41 (112)	1.77 (45)	10 (5)

Table 23: Raised face flanged sensor ½ - to 2½ -in. (15 mm to 65 mm) dimensions *(continued)*

Size, description	Overall length			Dim B	Dim C	Dim D	Dim J	Flow tube wgt (lbs./ kg)
	Dim A PTFE	Dim A Neoprene	Dim A Poly					
0.5-in. (15 mm) AS 2129 table D, SO/RF	7.88 (200)	7.88 (200)	7.88 (200)	3.74 (95)	4.50 (114)	4.41 (112)	1.85 (47)	8 (4)
0.5-in. (15 mm) AS 2129 table E, SO/RF	7.88 (200)	7.88 (200)	7.88 (200)	3.74 (95)	4.50 (114)	4.41 (112)	1.85 (47)	8 (4)
0.5-in. (15 mm) JIS B2220 - 10K, SO/RF	7.88 (200)	7.88 (200)	7.88 (200)	3.74 (95)	4.50 (114)	4.41 (112)	1.77 (45)	10 (5)
0.5-in. (15 mm) JIS B2220 - 20K, SO/RF	7.88 (200)	7.88 (200)	7.88 (200)	3.74 (95)	4.50 (114)	4.41 (112)	1.77 (45)	10 (5)
0.5-in. (15 mm) GB/T9119 PN40, SO/RF	7.88 (200)	7.88 (200)	7.88 (200)	3.74 (95)	4.50 (114)	4.41 (112)	1.77 (45)	10 (5)
1-in. (25 mm) ASME - 150, SO/RF	7.88 (200)	7.88 (200)	7.88 (200)	4.25 (108)	4.50 (114)	4.41 (112)	2.00 (51)	11 (5)
1-in. (25 mm) ASME - 300, SO/RF	7.88 (200)	7.88 (200)	7.88 (200)	4.88 (124)	4.50 (114)	4.41 (112)	2.00 (51)	14 (6)
1-in. (25 mm) EN 1092-1 - PN40, SO/RF	7.88 (200)	7.88 (200)	7.88 (200)	4.53 (115)	4.50 (114)	4.41 (112)	2.68 (68)	14 (6)
1-in. (25 mm) AS 2129 table D, SO/RF	7.88 (200)	7.88 (200)	7.88 (200)	4.53 (115)	4.50 (114)	4.41 (112)	2.56 (65)	10 (5)
1-in. (25 mm) AS 2129 table E, SO/RF	7.88 (200)	7.88 (200)	7.88 (200)	4.53 (115)	4.50 (114)	4.41 (112)	2.48 (63)	10 (5)
1 -in. (25mm) JISB2220-10K,SO/RF	7.88 (200)	7.88 (200)	7.88 (200)	4.92 (125)	4.50 (114)	4.41 (112)	2.64 (67)	13 (6)
1-in. (25 mm) JIS B2220 - 20K, SO/RF	7.88 (200)	7.88 (200)	7.88 (200)	4.92 (125)	4.50 (114)	4.41 (112)	2.64 (67)	14 (6)
1-in. (25 mm) GB/T9119 PN40, SO/RF	7.88 (200)	7.88 (200)	7.88 (200)	4.53 (115)	4.50 (114)	4.41 (112)	2.68 (68)	14 (6)
1.5-in (40 mm) ASME - 150, SO/RF	7.87 (200)	7.80 (198)	7.87 (200)	5.00 (127)	5.21 (132)	4.82 (122)	2.88 (73)	15 (7)
1.5-in. (40 mm) ASME - 300, SO/RF	7.87 (200)	7.80 (198)	7.87 (200)	6.12 (155)	5.21 (132)	4.82 (122)	2.88 (73)	21 (9)
1.5-in. (40 mm) EN 1092-1 - PN40, SO/RF	7.87 (200)	7.80 (198)	7.87 (200)	5.91 (150)	5.21 (132)	4.82 (122)	3.46 (88)	19 (9)
1.5-in. (40 mm) AS 2129 table D, SO/RF	7.87 (200)	7.80 (198)	7.87 (200)	5.31 (135)	5.21 (132)	4.82 (122)	3.07 (78)	12 (6)
1.5-in. (40 mm) AS 2129 table E, SO/RF	7.87 (200)	7.80 (198)	7.87 (200)	5.31 (135)	5.21 (132)	4.82 (122)	3.07 (78)	13 (6)
1.5-in. (40 mm) JIS B2220 - 10K, SO/RF	7.87 (200)	7.80 (198)	7.87 (200)	5.51 (140)	5.21 (132)	4.82 (122)	3.19 (81)	16 (7)
1.5-in. (40 mm) JIS B2220 - 20K, SO/RF	7.87 (200)	7.80 (198)	7.87 (200)	5.51 (140)	5.21 (132)	4.82 (122)	3.19 (81)	17 (8)

Table 23: Raised face flanged sensor ½ - to 2½ -in. (15 mm to 65 mm) dimensions *(continued)*

Size, description	Overall length			Dim B	Dim C	Dim D	Dim J	Flow tube wgt (lbs./ kg)
	Dim A PTFE	Dim A Neoprene	Dim A Poly					
1.5-in. (40 mm) GB/T9119 PN40, SO/RF	7.87 (200)	7.80 (198)	7.87 (200)	5.91 (150)	5.21 (132)	4.82 (122)	3.46 (88)	19 (9)
2-in. (50 mm) ASME - 150, SO/RF	7.87 (200)	7.80 (198)	7.87 (200)	6.00 (152)	5.21 (132)	4.82 (122)	3.62 (92)	20 (9)
2-in. (50 mm) ASME - 300, SO/RF	7.87 (200)	7.80 (198)	7.87 (200)	6.50 (165)	5.21 (132)	4.82 (122)	3.62 (92)	23 (11)
2-in. (50 mm) EN 1092-1 - PN40, SO/RF	7.87 (200)	7.80 (198)	7.87 (200)	6.50 (165)	5.21 (132)	4.82 (122)	4.02 (102)	24 (11)
2-in. (50 mm) AS 2129 table D, SO/RF	7.87 (200)	7.80 (198)	7.87 (200)	5.91 (150)	5.21 (132)	4.82 (122)	3.54 (90)	14 (6)
2-in. (50 mm) AS 2129 table E, SO/RF	7.87 (200)	7.80 (198)	7.87 (200)	5.91 (150)	5.21 (132)	4.82 (122)	3.54 (90)	15 (7)
2-in. (50 mm) JIS B2220 - 10K, SO/RF	7.87 (200)	7.80 (198)	7.87 (200)	6.10 (155)	5.21 (132)	4.82 (122)	3.78 (96)	18 (8)
2-in. (50 mm) JIS B2220 - 20K, SO/RF	7.87 (200)	7.80 (198)	7.87 (200)	6.10 (155)	5.21 (132)	4.82 (122)	3.78 (96)	19 (9)
2-in. (50 mm) AS 4087 PN16, SO/RF	7.87 (200)	7.80 (198)	7.87 (200)	5.91 (150)	5.21 (132)	4.82 (122)	3.54 (90)	16 (7)
2-in. (50 mm) AS 4087 PN21, SO/RF	7.87 (200)	7.80 (198)	7.87 (200)	6.50 (165)	5.21 (132)	4.82 (122)	4.06 (103)	34 (16)
2-in. (50 mm) AS 4087 PN35, SO/RF	7.87 (200)	7.80 (198)	7.87 (200)	6.50 (165)	5.21 (132)	4.82 (122)	4.06 (103)	96 (44)
2-in. (50 mm) GB/T9119 PN40, SO/RF	7.87 (200)	7.80 (198)	7.87 (200)	6.50 (165)	5.21 (132)	4.82 (122)	4.02 (102)	23 (11)
2.5-in. (65 mm) ASME - 150, SO/RF	7.82 (199)	7.76 (197)	N/A	7.00 (178)	6.31 (160)	5.37 (136)	4.12 (105)	27 (12)
2.5-in. (65 mm) ASME - 300, SO/RF	7.82 (199)	7.76 (197)	N/A	7.50 (191)	6.31 (160)	5.37 (136)	4.12 (105)	32 (15)
2.5-in. (65 mm) EN 1092-1 - PN16, SO/RF	7.82 (199)	7.76 (197)	N/A	7.28 (185)	6.31 (160)	5.37 (136)	4.80 (122)	27 (12)
2.5-in. (65 mm) EN 1092-1 - PN40, SO/RF	7.82 (199)	7.76 (197)	N/A	7.28 (185)	6.31 (160)	5.37 (136)	4.80 (122)	31 (14)
2.5-in. (65 mm) AS 2129 table D, SO/RF	7.82 (199)	7.76 (197)	N/A	6.50 (165)	6.31 (160)	5.37 (136)	4.06 (103)	17 (8)
2.5-in. (65 mm) AS 2129 table E, SO/RF	7.82 (199)	7.76 (197)	N/A	6.50 (165)	6.31 (160)	5.37 (136)	4.06 (103)	19 (9)
2.5-in. (65 mm) JIS B2220 - 10K, SO/RF	7.82 (199)	7.76 (197)	N/A	6.89 (175)	6.31 (160)	5.37 (136)	4.57 (116)	25 (11)
2.5-in. (65 mm) JIS B2220 - 20K, SO/RF	7.82 (199)	7.76 (197)	N/A	6.89 (175)	6.31 (160)	5.37 (136)	4.57 (116)	26 (12)

Table 23: Raised face flanged sensor ½ - to 2½ -in. (15 mm to 65 mm) dimensions *(continued)*

Size, description	Overall length			Dim B	Dim C	Dim D	Dim J	Flow tube wgt (lbs./ kg)
	Dim A PTFE	Dim A Neoprene	Dim A Poly					
2.5-in. (65 mm) AS 4087 PN16, SO/RF	7.82 (199)	7.76 (197)	N/A	6.50 (165)	6.31 (160)	5.37 (136)	4.06 (103)	18 (8)
2.5-in. (65 mm) AS 4087 PN21, SO/RF	7.82 (199)	7.76 (197)	N/A	7.28 (185)	6.31 (160)	5.37 (136)	4.80 (122)	24 (11)
2.5-in. (65 mm) AS 4087 PN35, SO/RF	7.82 (199)	7.76 (197)	N/A	7.28 (185)	6.31 (160)	5.37 (136)	4.80 (122)	27 (12)
2.5-in. (65 mm) GB/T9119 PN40, SO/RF	7.82 (199)	7.76 (197)	N/A	7.28 (185)	6.31 (160)	5.37 (136)	4.80 (122)	31 (14)

Figure 12: Raised face flanged sensor 3-in to 48-in. (75 mm to 1200 mm)

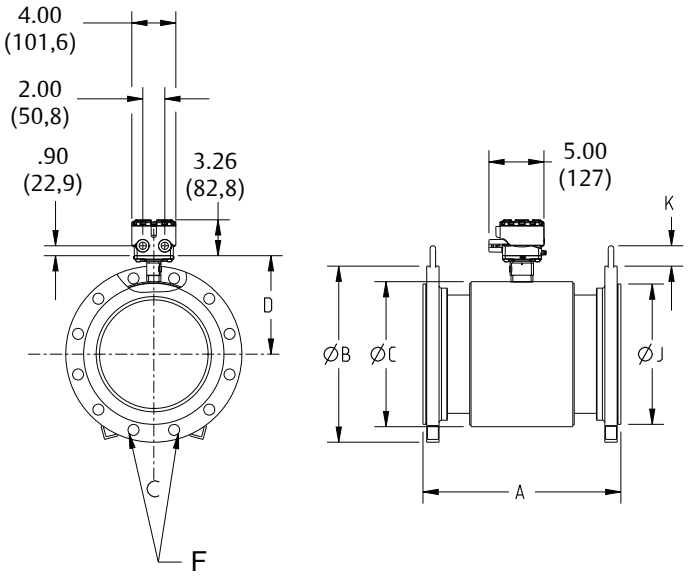

- F - Flange bolts to straddle center line

Table 24: Raised face flanged Sensor 3- to 6-in. (75 mm to 150 mm) dimensions

Size, description	Overall length			Dim B	Dim C	Dim D	Dim J	Dim K	Flow tube wgt (lbs./ kg)
	Dim A PTFE	Dim A Neoprene	Dim A Poly						
3-in. (80 mm) ASME - 150, SO/RF	7.87 (200)	7.75 (197)	7.87 (200)	7.50 (191)	7.21 (183)	5.82 (148)	5.00 (127)	1.70 (43)	34 (15)
3-in. (80 mm) ASME - 300, SO/RF	8.63 (219)	8.51 (216)	8.63 (219)	8.25 (210)	7.21 (183)	5.82 (148)	5.00 (127)	1.70 (43)	43 (19)
3-in. (80 mm) EN 1092-1 - PN40, SO/RF	7.87 (200)	7.75 (197)	7.87 (200)	7.87 (200)	7.21 (183)	5.82 (148)	5.43 (138)	1.70 (43)	38 (17)
3-in. (80 mm) AS 2129 table D, SO/RF	7.87 (200)	7.75 (197)	7.87 (200)	7.28 (185)	7.21 (183)	5.82 (148)	4.80 (122)	1.70 (43)	24 (11)

Table 24: Raised face flanged Sensor 3- to 6-in. (75 mm to 150 mm) dimensions *(continued)*

Size, description	Overall length			Dim B	Dim C	Dim D	Dim J	Dim K	Flow tube wgt (lbs./ kg)
	Dim A PTFE	Dim A Neoprene	Dim A Poly						
3-in. (80 mm) AS 2129 table E, SO/RF	7.87 (200)	7.75 (197)	7.87 (200)	7.28 (185)	7.21 (183)	5.82 (148)	4.80 (122)	1.70 (43)	25 (11)
3-in. (80 mm) JIS - 10K, SO/RF	7.87 (200)	7.75 (197)	7.87 (200)	7.28 (185)	7.21 (183)	5.82 (148)	4.96 (126)	1.70 (43)	28 (13)
3-in. (80 mm) JIS - 20K, SO/RF	7.87 (200)	7.75 (197)	7.87 (200)	7.87 (200)	7.21 (183)	5.82 (148)	5.20 (132)	1.70 (43)	34 (16)
3-in. (80 mm) AS 4087 PN16, SO/RF	7.87 (200)	7.75 (197)	7.87 (200)	7.28 (185)	7.21 (183)	5.82 (148)	4.80 (122)	1.70 (43)	20 (9)
3-in. (80 mm) AS 4087 PN21, SO/RF	7.87 (200)	7.75 (197)	7.87 (200)	8.07 (205)	7.21 (183)	5.82 (148)	5.55 (141)	1.70 (43)	56 (25)
3-in. (80 mm) AS 4087 PN35, SO/RF	7.87 (200)	7.75 (197)	7.87 (200)	8.07 (205)	7.21 (183)	5.82 (148)	5.55 (141)	1.70 (43)	109 (49)
3-in. (80 mm) GB/T9119 PN40, SO/RF	7.87 (200)	7.75 (197)	7.87 (200)	7.87 (200)	7.21 (183)	5.82 (148)	5.43 (138)	1.70 (43)	37 (17)
4-in. (100 mm) ASME - 150, SO/RF	9.84 (250)	9.69 (246)	9.84 (250)	9.00 (229)	7.91 (201)	6.17 (157)	6.19 (157)	1.70 (43)	45 (20)
4-in. (100 mm) ASME - 300, SO/RF	10.88 (276)	10.73 (273)	10.88 (276)	10.00 (254)	7.91 (201)	6.17 (157)	6.19 (157)	1.70 (43)	65 (29)
4-in. (100 mm) EN 1092-1 - PN16, SO/RF	9.84 (250)	9.69 (246)	9.84 (250)	8.66 (220)	7.91 (201)	6.17 (157)	6.22 (159)	1.70 (43)	41 (19)
4-in. (100 mm) EN 1092-1 - PN40, SO/RF	9.84 (250)	9.69 (246)	9.84 (250)	9.25 (235)	7.91 (201)	6.17 (157)	6.38 (162)	1.70 (43)	49 (22)
4-in. (100 mm) AS 2129 table D, SO/RF	9.84 (250)	9.69 (246)	9.84 (250)	8.46 (215)	7.91 (201)	6.17 (157)	6.06 (154)	1.70 (43)	31 (14)
4-in. (100 mm) AS 2129 table E, SO/RF	9.84 (250)	9.69 (246)	9.84 (250)	8.46 (215)	7.91 (201)	6.17 (157)	6.06 (154)	1.70 (43)	33 (15)
4-in. (100 mm) JIS - 10K, SO/RF	9.84 (250)	9.69 (246)	9.84 (250)	8.27 (210)	7.91 (201)	6.17 (157)	5.95 (151)	1.70 (43)	35 (16)
4-in. (100 mm) JIS - 20K, SO/RF	9.84 (250)	9.69 (246)	9.84 (250)	8.86 (225)	7.91 (201)	6.17 (157)	6.30 (160)	1.70 (43)	44 (20)
4-in. (100 mm) AS 4087 PN16, SO/RF	9.84 (250)	9.69 (246)	9.84 (250)	8.46 (215)	7.91 (201)	6.17 (157)	6.06 (154)	1.70 (43)	28 (13)
4-in. (100 mm) AS 4087 PN21, SO/RF	9.84 (250)	9.69 (246)	9.84 (250)	9.05 (230)	7.91 (201)	6.17 (157)	6.57 (167)	1.70 (43)	68 (31)
4-in. (100 mm) AS 4087 PN35, SO/RF	9.84 (250)	9.69 (246)	9.84 (250)	9.05 (230)	7.91 (201)	6.17 (157)	6.57 (167)	1.70 (43)	119 (54)
4-in. (100 mm) GB/T9119 PN16, SO/RF	9.84 (250)	9.69 (246)	9.84 (250)	8.66 (220)	7.91 (201)	6.17 (157)	6.22 (158)	1.70 (43)	41 (19)
4-in. (100 mm) GB/T9119 PN40, SO/RF	9.84 (250)	9.69 (246)	9.84 (250)	9.25 (235)	7.91 (201)	6.17 (157)	6.38 (162)	1.70 (43)	49 (22)

Table 24: Raised face flanged Sensor 3- to 6-in. (75 mm to 150 mm) dimensions *(continued)*

Size, description	Overall length			Dim B	Dim C	Dim D	Dim J	Dim K	Flow tube wgt (lbs./ kg)
	Dim A PTFE	Dim A Neoprene	Dim A Poly						
5-in. (125 mm) ASME - 150, SO/RF	9.79 (249)	9.71 (247)	N/A	10.00 (254)	9.61 (244)	7.02 (178)	7.31 (186)	1.70 (43)	54 (24)
5-in. (125 mm) ASME - 300,SO/RF	10.94 (278)	10.86 (276)	N/A	11.00 (279)	9.61 (244)	7.02 (178)	7.31 (186)	1.70 (43)	89 (40)
5-in. (125 mm) EN 1092-1 - PN16, SO/RF	9.79 (249)	9.50 (241)	N/A	9.84 (250)	9.61 (244)	7.02 (178)	7.40 (188)	1.70 (43)	55 (25)
5-in. (125 mm) EN 1092-1 - PN40, SO/RF	9.79 (249)	9.71 (247)	N/A	10.63 (270)	9.61 (244)	7.02 (178)	7.40 (188)	1.70 (43)	65 (29)
5-in. (125 mm) AS 2129 table D, SO/RF	9.79 (249)	9.71 (247)	N/A	10.04 (255)	9.61 (244)	7.02 (178)	7.32 (186)	1.70 (43)	43 (20)
5-in. (125 mm) AS 2129 table E, SO/RF	9.79 (249)	9.71 (247)	N/A	10.04 (255)	9.61 (244)	7.02 (178)	7.31 (186)	1.70 (43)	44 (20)
5-in. (125 mm) JIS - 10K, SO/RF	9.79 (249)	9.71 (247)	N/A	9.84 (250)	9.61 (244)	7.02 (178)	7.17 (182)	1.70 (43)	49 (22)
5-in. (125 mm) JIS - 20K, SO/RF	9.79 (249)	9.71 (247)	N/A	10.63 (270)	9.61 (244)	7.02 (178)	7.68 (195)	1.70 (43)	64 (29)
5-in. (125 mm) GB/T9119 PN16, SO/RF	9.79 (249)	9.50 (241)	N/A	9.84 (250)	9.61 (244)	7.02 (178)	7.40 (188)	1.70 (43)	51 (23)
5-in. (125 mm) GB/T9119 PN40, SO/RF	9.79 (249)	9.71 (247)	N/A	10.63 (270)	9.61 (244)	7.02 (178)	7.40 (188)	1.70 (43)	60 (27)
6-in. (150 mm) ASME - 150, SO/RF	11.81 (300)	11.61 (295)	11.73 (298)	11.00 (279)	9.98 (253)	7.30 (185)	8.50 (216)	1.70 (43)	68 (31)
6-in. (150 mm) ASME - 300, SO/RF	13.06 (302)	12.88 (327)	13.00 (330)	12.50 (318)	9.98 (253)	7.30 (185)	8.50 (216)	1.70 (43)	117 (53)
6-in. (150 mm) EN 1092-1 - PN16, SO/RF	11.81 (300)	11.61 (295)	11.73 (298)	11.22 (285)	9.98 (253)	7.30 (185)	8.35 (212)	1.70 (43)	67 (31)
6-in. (150 mm) EN 1092-1 - PN40, SO/RF	13.06 (332)	12.88 (327)	13.00 (330)	11.81 (300)	9.98 (253)	7.30 (185)	8.58 (218)	1.70 (43)	95 (43)
6-in. (150 mm) AS 2129 table D, SO/RF	11.81 (300)	11.61 (295)	11.73 (298)	11.02 (280)	9.98 (253)	7.30 (185)	8.31 (211)	1.70 (43)	52 (24)
6-in. (150 mm) AS 2129 table E, SO/RF	11.81 (300)	11.61 (295)	11.73 (298)	11.02 (280)	9.98 (253)	7.30 (185)	8.15 (207)	1.70 (43)	57 (26)
6-in. (150 mm) JIS - 10K, SO/RF	11.81 (300)	11.61 (295)	11.73 (298)	11.02 (280)	9.98 (253)	7.30 (185)	8.35 (212)	1.70 (43)	64 (29)
6-in. (150 mm) JIS - 20K, SO/RF	11.81 (300)	11.61 (295)	11.73 (298)	12.01 (305)	9.98 (253)	7.30 (185)	9.06 (230)	1.70 (43)	82 (37)
6-in. (150 mm) AS 4087 PN16,SO/RF	11.81 (300)	11.61 (295)	11.73 (298)	11.02 (280)	9.98 (253)	7.30 (185)	8.31 (211)	1.70 (43)	46 (21)
6-in. (150 mm) AS 4087 PN21,SO/RF	11.81 (300)	11.61 (295)	11.73 (298)	12.01 (305)	9.98 (253)	7.30 (185)	9.13 (232)	1.70 (43)	98 (45)

Table 24: Raised face flanged Sensor 3- to 6-in. (75 mm to 150 mm) dimensions *(continued)*

Size, description	Overall length			Dim B	Dim C	Dim D	Dim J	Dim K	Flow tube wgt (lbs./ kg)
	Dim A PTFE	Dim A Neoprene	Dim A Poly						
6-in. (150 mm) AS 4087 PN35, SO/RF	11.81 (300)	11.61 (295)	11.73 (298)	12.01 (305)	9.98 (253)	7.30 (185)	9.13 (232)	1.70 (43)	186 (84)
6-in. (150 mm) GB/T9119 PN16, SO/RF	11.81 (300)	11.61 (295)	11.73 (298)	11.22 (285)	9.98 (253)	7.30 (185)	8.35 (212)	1.70 (43)	64 (29)
6-in. (150 mm) GB/T9119 PN40, SO/RF	13.06 (332)	12.88 (327)	13.00 (330)	11.81 (300)	9.98 (253)	7.30 (185)	8.58 (218)	1.70 (43)	94 (43)

Table 25: Raised Face Flanged Sensor 8- to 12-in. (200 mm to 300 mm) dimensions

Size, description	Overall length			Dim B	Dim C	Dim D	Dim J	Dim K	Flow tube wgt (lbs./ kg)
	Dim A PTFE	Dim A Neoprene	Dim A Poly						
8-in. (200 mm) ASME - 150, SO/RF	13.78 (350)	13.53 (344)	13.65 (347)	13.50 (343)	11.92 (303)	8.27 (210)	10.62 (270)	1.70 (43)	105 (48)
8-in. (200 mm) ASME - 300,SO/RF	15.60 (396)	15.42 (392)	15.54 (395)	15.00 (381)	11.92 (303)	8.27 (210)	10.62 (270)	1.70 (43)	183 (83)
8-in. (200 mm) EN 1092-1 - PN10, SO/RF	13.78 (350)	13.53 (344)	13.65 (347)	13.39 (340)	11.92 (303)	8.27 (210)	10.55 (268)	1.70 (43)	97 (44)
8-in. (200 mm) EN 1092-1 - PN16, SO/RF	13.78 (350)	13.53 (344)	13.65 (347)	13.39 (340)	11.92 (303)	8.27 (210)	10.55 (268)	1.70 (43)	96 (43)
8-in. (200 mm) EN 1092-1 - PN25, SO/RF	13.78 (350)	13.53 (344)	13.65 (347)	14.17 (360)	11.92 (303)	8.27 (210)	10.94 (278)	1.70 (43)	120 (54)
8-in. (200 mm) EN 1092-1 - PN40, SO/RF	15.60 (396)	15.42 (392)	15.54 (395)	14.76 (375)	11.92 (303)	8.27 (210)	11.22 (285)	1.70 (43)	158 (72)
8-in. (200 mm) AS 2129 table D, SO/RF	13.78 (350)	13.53 (344)	13.65 (347)	13.19 (335)	11.92 (303)	8.27 (210)	10.55 (268)	1.70 (43)	77 (35)
8-in. (200 mm) AS 2129 table E, SO/RF	13.78 (350)	13.53 (344)	13.65 (347)	13.19 (335)	11.92 (303)	8.27 (210)	10.39 (264)	1.70 (43)	86 (39)
8-in. (200 mm) JIS - 10K, SO/RF	13.78 (350)	13.53 (344)	13.65 (347)	12.99 (330)	11.92 (303)	8.27 (210)	10.32 (262)	1.70 (43)	81 (37)
8-in. (200 mm) JIS - 20K, SO/RF	15.60 (396)	15.42 (392)	15.54 (395)	13.78 (350)	11.92 (303)	8.27 (210)	10.83 (275)	1.70 (43)	134 (61)
8-in. (200 mm) AS 4087 PN16, SO/RF	13.78 (350)	13.53 (344)	13.65 (347)	13.19 (335)	11.92 (303)	8.27 (210)	10.55 (268)	1.70 (43)	73 (32)
8-in. (200 mm) AS 4087 PN21, SO/RF	13.78 (350)	13.53 (344)	13.65 (347)	14.57 (370)	11.92 (303)	8.27 (210)	11.65 (296)	1.70 (43)	136 (62)
8-in. (200 mm) AS 4087 PN35, SO/RF	15.60 (396)	15.42 (392)	15.54 (395)	14.57 (370)	11.92 (303)	8.27 (210)	10.24 (260)	1.70 (43)	241 (109)
8-in. (200 mm) GB/T9119 PN10, SO/RF	13.78 (350)	13.53 (344)	13.65 (347)	13.39 (340)	11.92 (303)	8.27 (210)	10.55 (268)	1.70 (43)	96 (43)

Table 25: Raised Face Flanged Sensor 8- to 12-in. (200 mm to 300 mm) dimensions *(continued)*

Size, description	Overall length			Dim B	Dim C	Dim D	Dim J	Dim K	Flow tube wgt (lbs./ kg)
	Dim A PTFE	Dim A Neoprene	Dim A Poly						
8-in. (200 mm) GB/T9119 PN16, SO/RF	13.78 (350)	13.53 (344)	13.65 (347)	13.39 (340)	11.92 (303)	8.27 (210)	10.55 (268)	1.70 (43)	95 (43)
8-in. (200 mm) GB/T9119 PN40, SO/RF	15.60 (396)	15.42 (392)	15.54 (395)	14.76 (375)	11.92 (303)	8.27 (210)	11.22 (285)	1.70 (43)	154 (70)
10-in. (250 mm) ASME - 150, SO/RF	17.98 (457)	17.61 (447)	17.73 (450)	16.00 (406)	13.12 (333)	8.91 (226)	12.75 (324)	2.00 (51)	138 (63)
10-in. (250 mm) ASME - 300,SO/RF	17.88 (454)	17.61 (447)	17.73 (450)	17.50 (445)	13.12 (333)	8.91 (226)	12.75 (324)	2.00 (51)	247 (112)
10-in. (250 mm) EN 1092-1 - PN10, SO/RF	17.98 (457)	17.61 (447)	17.73 (450)	15.55 (395)	13.12 (333)	8.91 (226)	12.60 (320)	2.00 (51)	122 (55)
10-in. (250 mm) EN 1092-1 - PN16, SO/RF	17.98 (457)	17.61 (447)	17.73 (450)	15.94 (405)	13.12 (333)	8.91 (226)	12.60 (320)	2.00 (51)	126 (57)
10-in. (250 mm) EN 1092-1 - PN25, SO/RF	17.98 (457)	17.61 (447)	17.73 (450)	16.73 (425)	13.12 (333)	8.91 (226)	13.19 (335)	2.00 (51)	158 (72)
10-in. (250 mm) EN 1092-1 - PN40, SO/RF	17.98 (457)	17.61 (447)	17.73 (450)	17.72 (450)	13.12 (333)	8.91 (226)	13.58 (345)	2.00 (51)	221 (100)
10-in. (250 mm) AS 2129 table D, SO/RF	17.98 (457)	17.61 (447)	17.73 (450)	15.94 (405)	13.12 (333)	8.91 (226)	12.91 (328)	2.00 (51)	112 (51)
10-in. (250 mm) AS 2129 table E, SO/RF	17.98 (457)	17.61 (447)	17.73 (450)	15.94 (405)	13.12 (333)	8.91 (226)	12.91 (328)	2.00 (51)	127 (57)
10-in. (250 mm) JIS B2220 - 10K, SO/RF	17.98 (457)	17.61 (447)	17.73 (450)	15.75 (430)	13.12 (333)	8.91 (226)	12.76 (324)	2.00 (51)	118 (53)
10-in. (250 mm) AS 4087 PN16, SO/RF	17.98 (457)	17.61 (447)	17.73 (450)	15.94 (405)	13.12 (333)	8.91 (226)	12.91 (328)	2.00 (51)	168 (76)
10-in. (250 mm) AS 4087 PN21, SO/RF	17.98 (457)	17.61 (447)	17.73 (450)	16.93 (395)	13.12 (333)	8.91 (226)	13.74 (349)	2.00 (51)	258 (117)
10-in. (250) AS 4087 PN35, SO/RF	17.88 (454)	17.61 (447)	17.73 (450)	16.93 (395)	13.12 (333)	8.91 (226)	12.24 (311)	2.00 (51)	333 (151)
10-in. (250 mm) GB/T 9119 PN10, SO/RF	17.98 (457)	17.61 (447)	17.73 (450)	15.55 (395)	13.12 (333)	8.91 (226)	12.60 (320)	2.00 (51)	105 (48)
10-in. (250 mm) GB/T 9119 PN16, SO/RF	17.98 (457)	17.61 (447)	17.73 (450)	15.94 (405)	13.12 (333)	8.91 (226)	12.60 (320)	2.00 (51)	117 (53)
10-in. (250 mm) GB/T 9119 PN40, SO/RF	17.88 (454)	17.61 (447)	17.73 (450)	17.72 (450)	13.12 (333)	8.91 (226)	13.58 (345)	2.00 (51)	213 (97)
12-in. (300 mm) ASME - 150, SO/RF	19.91 (506)	19.58 (497)	19.70 (500)	19.00 (483)	15.12 (384)	9.91 (252)	15.00 (381)	2.00 (51)	238 (108)
12-in. (300 mm) ASME - 300,SO/RF	19.92 (506)	19.58 (497)	19.70 (500)	20.50 (521)	15.12 (384)	9.91 (252)	15.00 (381)	2.00 (51)	346 (157)
12-in. (300 mm) EN 1092-1 - PN10, SO/RF	19.91 (506)	19.58 (497)	19.70 (500)	17.52 (445)	15.12 (384)	9.91 (252)	14.57 (370)	2.00 (51)	187 (85)

Table 25: Raised Face Flanged Sensor 8- to 12-in. (200 mm to 300 mm) dimensions *(continued)*

Size, description	Overall length			Dim B	Dim C	Dim D	Dim J	Dim K	Flow tube wgt (lbs./ kg)
	Dim A PTFE	Dim A Neoprene	Dim A Poly						
12-in. (300 mm) EN 1092-1 - PN16, SO/RF	19.91 (506)	19.58 (497)	19.70 (500)	18.11 (460)	15.12 (384)	9.91 (252)	14.88 (378)	2.00 (51)	198 (90)
12-in. (300 mm) EN 1092-1 - PN25, SO/RF	19.91 (506)	19.58 (497)	19.70 (500)	19.09 (485)	15.12 (384)	9.91 (252)	15.55 (395)	2.00 (51)	243 (110)
12-in. (300 mm) EN 1092-1 - PN40, SO/RF	19.92 (506)	19.58 (497)	19.70 (500)	20.28 (515)	15.12 (384)	9.91 (252)	16.14 (410)	2.00 (51)	340 (154)
12-in. (300 mm) AS 2129 table D, SO/RF	19.91 (506)	19.58 (497)	19.70 (500)	17.91 (455)	15.12 (384)	9.91 (252)	14.88 (378)	2.00 (51)	185 (84)
12-in. (300 mm) AS 2129 table E, SO/RF	19.91 (506)	19.58 (497)	19.70 (500)	17.91 (455)	15.12 (384)	9.91 (252)	14.72 (374)	2.00 (51)	197 (89)
12-in. (300 mm) JIS B2220 - 10K, SO/RF	19.91 (506)	19.58 (497)	19.70 (500)	17.52 (445)	15.12 (384)	9.91 (252)	14.49 (368)	2.00 (51)	178 (81)
12-in. (300 mm) AS 4087 PN16, SO/RF	19.91 (506)	19.58 (497)	19.70 (500)	17.91 (455)	15.12 (384)	9.91 (252)	14.88 (378)	2.00 (51)	264 (120)
12-in. (300 mm) AS 4087 PN21, SO/RF	19.91 (506)	19.58 (497)	19.70 (500)	19.29 (490)	15.12 (384)	9.91 (252)	15.98 (406)	2.00 (51)	361 (164)
12-in. (300 mm) AS 4087 PN35, SO/RF	19.92 (506)	19.58 (497)	19.70 (500)	19.29 (490)	15.12 (384)	9.91 (252)	14.25 (362)	2.00 (51)	452 (205)
12-in. (300 mm) GB/T 9119 PN10, SO/RF	19.91 (506)	19.58 (497)	19.70 (500)	17.52 (445)	15.12 (384)	9.91 (252)	14.57 (370)	2.00 (51)	185 (84)
12-in. (300 mm) GB/T 9119 PN16, SO/RF	19.91 (506)	19.58 (497)	19.70 (500)	18.11 (460)	15.12 (384)	9.91 (252)	14.88 (378)	2.00 (51)	204 (92)
12-in. (300 mm) GB/T 9119 PN40, SO/RF	19.92 (506)	19.58 (497)	19.70 (500)	20.28 (515)	15.12 (384)	9.91 (252)	16.14 (410)	2.00 (51)	343 (156)

Table 26: Raised face flanged sensor 14- to 18-in. (350 mm to 450 mm) dimensions

Size, description	Overall length			Dim B	Dim C	Dim D	Dim J	Dim K	Flow tube wgt (lbs./ kg)
	Dim A PTFE	Dim A Neoprene	Dim A Poly						
14-in. (350 mm) ASME - 150,SO/RF	21.75 (553)	21.55 (547)	21.67 (550)	21.00 (533)	16.38 (416)	10.54 (268)	16.25 (413)	2.00 (51)	251 (114)
14-in. (350 mm) ASME - 300, SO/RF	21.75 (553)	21.55 (547)	21.67 (550)	23.00 (584)	16.38 (416)	10.54 (268)	16.25 (413)	2.00 (51)	453 (205)
14-in. (350 mm) EN 1092-1 - PN10, SO/RF	21.75 (553)	21.55 (547)	21.67 (550)	19.88 (505)	16.38 (416)	10.54 (268)	16.93 (430)	2.00 (51)	198 (90)
14-in. (350 mm) EN 1092-1 - PN16, SO/RF	21.75 (553)	21.55 (547)	21.67 (550)	20.47 (520)	16.38 (416)	10.54 (268)	17.24 (438)	2.00 (51)	221 (100)
14-in. (350 mm) EN 1092-1 - PN25, SO/RF	21.75 (553)	21.55 (547)	21.67 (550)	21.85 (555)	16.38 (416)	10.54 (268)	17.72 (450)	2.00 (51)	297 (135)

Table 26: Raised face flanged sensor 14- to 18-in. (350 mm to 450 mm) dimensions *(continued)*

Size, description	Overall length			Dim B	Dim C	Dim D	Dim J	Dim K	Flow tube wgt (lbs./ kg)
	Dim A PTFE	Dim A Neoprene	Dim A Poly						
14-in. (350 mm) EN 1092-1 - PN40, SO/RF	21.75 (553)	21.55 (547)	21.67 (550)	22.83 (580)	16.38 (416)	10.54 (268)	18.31 (465)	2.00 (51)	404 (183)
14-in. (350 mm) AS 2129 table D, SO/RF	21.75 (553)	21.55 (547)	21.67 (550)	20.67 (525)	16.38 (416)	10.54 (268)	17.24 (438)	2.00 (51)	181 (82)
14-in. (350 mm) AS 2129 table E, SO/RF	21.75 (553)	21.55 (547)	21.67 (550)	20.67 (525)	16.38 (416)	10.54 (268)	17.24 (438)	2.00 (51)	207 (94)
14-in. (350 mm) JIS B2220 - 10K, SO/RF	21.75 (553)	21.55 (547)	21.67 (550)	19.29 (490)	16.38 (416)	10.54 (268)	16.26 (413)	2.00 (51)	170 (77)
14-in. (350 mm) AS 4087 PN16,SO/RF	21.75 (553)	21.55 (547)	21.67 (550)	20.67 (525)	16.38 (416)	10.54 (268)	17.24 (438)	2.00 (51)	367 (167)
14 -in. (350mm) AS4087 PN21,SO/RF	21.75 (553)	21.55 (547)	21.67 (550)	21.65 (550)	16.38 (416)	10.54 (268)	18.07 (459)	2.00 (51)	409 (186)
14-in. (350 mm) AS 4087 PN35, SO/RF	21.75 (553)	21.55 (547)	21.67 (550)	21.65 (550)	16.38 (416)	10.54 (268)	16.50 (419)	2.00 (51)	622 (282)
14-in. (350 mm) GB/T 9119 PN10, SO/RF	21.75 (553)	21.55 (547)	21.67 (550)	19.88 (505)	16.38 (416)	10.54 (268)	16.93 (430)	2.00 (51)	192 (87)
14-in. (350 mm) GB/T 9119 PN16, SO/RF	21.75 (553)	21.55 (547)	21.67 (550)	20.47 (520)	16.38 (416)	10.54 (268)	17.24 (438)	2.00 (51)	219 (99)
14-in. (350 mm) GB/T 9119 PN40, SO/RF	21.75 (553)	21.55 (547)	21.67 (550)	22.83 (580)	16.38 (416)	10.54 (268)	18.31 (465)	2.00 (51)	421 (191)
16-in. (400 mm) ASME - 150, SO/RF	23.71 (602)	23.51 (597)	23.63 (600)	23.50 (597)	18.40 (467)	11.55 (293)	18.50 (470)	3.13 (80)	346 (157)
16-in. (400 mm) ASME - 300,SO/RF	23.71 (602)	23.51 (597)	23.63 (600)	25.50 (648)	18.40 (467)	11.55 (293)	18.50 (470)	3.13 (80)	632 (287)
16-in. (400 mm) EN 1092-1 - PN10, SO/RF	23.71 (602)	23.51 (597)	23.63 (600)	22.24 (565)	18.40 (467)	11.55 (293)	18.98 (482)	3.13 (80)	272 (123)
16-in. (400 mm) EN 1092-1 - PN16, SO/RF	23.71 (602)	23.51 (597)	23.63 (600)	22.83 (580)	18.40 (467)	11.55 (293)	19.28 (490)	3.13 (80)	306 (139)
16-in. (400 mm) EN 1092-1 - PN25, SO/RF	23.71 (602)	23.51 (597)	23.63 (600)	24.41 (620)	18.40 (467)	11.55 (293)	19.88 (505)	3.13 (80)	498 (226)
16-in. (400 mm) EN 1092-1 - PN40, SO/RF	23.71 (602)	23.51 (597)	23.63 (600)	25.98 (660)	18.40 (467)	11.55 (293)	21.06 (535)	3.13 (80)	606 (275)
16-in. (400 mm) AS 2129 table D, SO/RF	23.71 (602)	23.51 (597)	23.63 (600)	22.83 (580)	18.40 (467)	11.55 (293)	19.25 (489)	3.13 (80)	243 (110)
16-in. (400 mm) AS 2129 table E, SO/RF	23.71 (602)	23.51 (597)	23.63 (600)	22.83 (580)	18.40 (467)	11.55 (293)	19.25 (489)	3.13 (80)	287 (130)
16-in. (400 mm) JIS B2220 - 10K, SO/RF	23.71 (602)	23.51 (597)	23.63 (600)	22.05 (560)	18.40 (467)	11.55 (293)	18.70 (475)	3.13 (80)	250 (114)
16-in. (400 mm) AS 4087 PN16, SO/RF	23.71 (602)	23.51 (597)	23.63 (600)	22.83 (580)	18.40 (467)	11.55 (293)	19.25 (489)	3.13 (80)	458 (208)

Table 26: Raised face flanged sensor 14- to 18-in. (350 mm to 450 mm) dimensions *(continued)*

Size, description	Overall length			Dim B	Dim C	Dim D	Dim J	Dim K	Flow tube wgt (lbs./ kg)
	Dim A PTFE	Dim A Neoprene	Dim A Poly						
16-in. (400 mm) AS 4087 PN21,SO/RF	23.71 (602)	23.51 (597)	23.63 (600)	24.02 (610)	18.40 (467)	11.55 (293)	20.31 (516)	3.13 (80)	603 (273)
16-in. (400 mm) AS 4087 PN35, SO/RF	23.71 (602)	23.51 (597)	23.63 (600)	24.02 (610)	18.40 (467)	11.55 (293)	19.02 (483)	3.13 (80)	804 (364)
16-in. (400 mm) GB/T 9119 PN10, SO/RF	23.71 (602)	23.51 (597)	23.63 (600)	22.24 (565)	18.40 (467)	11.55 (293)	18.98 (482)	3.13 (80)	241 (109)
16-in. (400 mm) GB/T 9119 PN16, SO/RF	23.71 (602)	23.51 (597)	23.63 (600)	22.83 (580)	18.40 (467)	11.55 (293)	19.28 (490)	3.13 (80)	303 (137)
16-in. (400 mm) GB/T 9119 PN40, SO/RF	23.71 (602)	23.51 (597)	23.63 (600)	25.98 (660)	18.40 (467)	11.55 (293)	21.06 (535)	3.13 (80)	636 (289)
18-in. (450) ASME - 150, SO/RF	23.46 (596)	23.51 (597)	23.38 (594)	25.00 (635)	20.42 (519)	12.57 (319)	21.00 (533)	3.13 (80)	440 (200)
18-in. (450 mm) ASME - 300, SO/RF	23.46 (596)	23.51 (597)	23.38 (594)	28.00 (711)	20.42 (519)	12.57 (319)	21.00 (533)	3.13 (80)	849 (385)
18-in. (450 mm) EN 1092-1 - PN10, SO/RF	23.46 (596)	23.51 (597)	23.38 (594)	24.21 (615)	20.42 (519)	12.57 (319)	20.94 (532)	3.13 (80)	370 (168)
18-in. (450 mm) EN 1092-1 - PN16, SO/RF	23.46 (596)	23.51 (597)	23.38 (594)	25.20 (640)	20.42 (519)	12.57 (319)	21.65 (550)	3.13 (80)	423 (192)
18-in. (450 mm) EN 1092-1 - PN25, SO/RF	23.46 (596)	23.51 (597)	23.38 (594)	26.38 (670)	20.42 (519)	12.57 (319)	21.85 (555)	3.13 (80)	686 (312)
18-in. (450 mm) EN 1092-1 - PN40, SO/RF	23.46 (596)	23.51 (597)	23.38 (594)	26.97 (685)	20.42 (519)	12.57 (319)	22.05 (560)	3.13 (80)	759 (345)
18-in. (450 mm) AS 2129 table D, SO/RF	23.46 (596)	23.51 (597)	23.38 (594)	25.20 (640)	20.42 (519)	12.57 (319)	20.94 (532)	3.13 (80)	345 (156)
18-in. (450 mm) AS 2129 table E, SO/RF	23.46 (596)	23.51 (597)	23.38 (594)	25.20 (640)	20.42 (519)	12.57 (319)	21.73 (552)	3.13 (80)	403 (183)
18-in. (450 mm) JIS B2220 - 10K, SO/RF	23.46 (596)	23.51 (597)	23.38 (594)	24.41 (620)	20.42 (519)	12.57 (319)	20.87 (530)	3.13 (80)	362 (164)
18-in. (450 mm) JIS B2220 - 20K, SO/RF	23.46 (596)	23.51 (597)	23.38 (594)	26.58 (675)	20.42 (519)	12.57 (319)	22.05 (560)	3.13 (80)	693 (314)
18-in. (450 mm) AS 4087 PN16, SO/RF	23.46 (596)	23.51 (597)	23.38 (594)	25.20 (640)	20.42 (519)	12.57 (319)	21.73 (552)	3.13 (80)	312 (141)
18-in. (450 mm) AS 4087 PN21, SO/RF	23.46 (596)	23.51 (597)	23.38 (594)	26.58 (675)	20.42 (519)	12.57 (319)	22.48 (571)	3.13 (80)	442 (200)
18-in. (450 mm) AS 4087 PN35, SO/RF	23.46 (596)	23.51 (597)	23.38 (594)	26.58 (675)	20.42 (519)	12.57 (319)	20.98 (533)	3.13 (80)	859 (390)
18-in. (450 mm) GB/T9119 PN10, SO/RF	23.46 (596)	23.51 (597)	23.38 (594)	24.41 (620)	20.42 (519)	12.57 (319)	20.94 (532)	3.13 (80)	370 (168)
18-in. (450 mm) GB/T9119 PN16, SO/RF	23.46 (596)	23.51 (597)	23.38 (594)	25.20 (640)	20.42 (519)	12.57 (319)	21.65 (550)	3.13 (80)	423 (192)

Table 26: Raised face flanged sensor 14- to 18-in. (350 mm to 450 mm) dimensions *(continued)*

Size, description	Overall length			Dim B	Dim C	Dim D	Dim J	Dim K	Flow tube wgt (lbs./ kg)
	Dim A PTFE	Dim A Neoprene	Dim A Poly						
18-in. (450 mm) GB/T9119 PN40, SO/RF	23.46 (596)	23.51 (597)	23.38 (594)	26.97 (685)	20.42 (519)	12.57 (319)	22.05 (560)	3.13 (80)	782 (355)

Table 27: Raised face flanged sensor 20- to 36-in. (500 mm to 900 mm) dimensions

Size, description	Overall length			Dim B	Dim C	Dim D	Dim J	Dim K	Flow tube wgt (lbs./ kg)
	Dim A PTFE	Dim A Neoprene	Dim A Poly						
20-in. (500 mm) ASME - 150, SO/RF	23.46 (596)	23.51 (597)	23.38 (594)	27.50 (699)	22.44 (570)	13.58 (345)	23.00 (584)	3.13 (80)	544 (247)
20-in. (500 mm) ASME - 300, SO/RF	23.46 (596)	23.51 (597)	23.38 (594)	30.50 (775)	22.44 (570)	13.58 (345)	23.00 (584)	3.13 (80)	1027 (466)
20-in. (500 mm) EN 1092-1 - PN10, SO/RF	23.46 (596)	23.51 (597)	23.38 (594)	26.38 (670)	22.44 (570)	13.58 (345)	23.03 (585)	3.13 (80)	448 (204)
20-in. (500 mm) EN 1092-1 - PN16, SO/RF	23.46 (596)	23.51 (597)	23.38 (594)	28.15 (715)	22.44 (570)	13.58 (345)	24.02 (610)	3.13 (80)	542 (212)
20-in. (500 mm) EN 1092-1 - PN25, SO/RF	23.46 (596)	23.51 (597)	23.38 (594)	28.74 (730)	22.44 (570)	13.58 (345)	24.21 (615)	3.13 (80)	832 (378)
20-in. (500 mm) EN 1092-1 - PN40, SO/RF	23.46 (596)	23.51 (597)	23.38 (594)	29.72 (755)	22.44 (570)	13.58 (345)	24.21 (615)	3.13 (80)	913 (414)
20-in. (500 mm) AS 2129 table D, SO/RF	23.46 (596)	23.51 (597)	23.38 (594)	27.76 (705)	22.44 (570)	13.58 (345)	23.98 (609)	3.13 (80)	446 (203)
20-in. (500 mm) AS 2129 table E, SO/RF	23.46 (596)	23.51 (597)	23.38 (594)	27.76 (705)	22.44 (570)	13.58 (345)	23.98 (609)	3.13 (80)	503 (228)
20-in. (500 mm) JIS B2220 - 10K, SO/RF	23.46 (596)	23.51 (597)	23.38 (594)	26.58 (675)	22.44 (570)	13.58 (345)	23.03 (585)	3.13 (80)	428 (195)
20-in. (500 mm) JIS B2220 - 20K, SO/RF	23.46 (596)	23.51 (597)	23.38 (594)	28.74 (730)	22.44 (570)	13.58 (345)	24.21 (615)	3.13 (80)	819 (372)
20-in. (500 mm) AS 4087 PN16, SO/RF	23.46 (596)	23.51 (597)	23.38 (594)	27.76 (705)	22.44 (570)	13.58 (345)	23.98 (609)	3.13 (80)	428 (195)
20-in. (500 mm) AS 4087 PN21, SO/RF	23.46 (596)	23.51 (597)	23.38 (594)	28.94 (735)	22.44 (570)	13.58 (345)	24.96 (634)	3.13 (80)	602 (274)
20-in. (500 mm) AS 4087 PN35,SO/RF	23.46 (596)	23.51 (597)	23.38 (594)	28.94 (735)	22.44 (570)	13.58 (345)	23.50 (587)	3.13 (80)	974 (442)
20-in. (500 mm) GB/T9119 PN10, SO/RF	23.46 (596)	23.51 (597)	23.38 (594)	26.38 (670)	22.44 (570)	13.58 (345)	23.03 (585)	3.13 (80)	445 (202)
20-in. (500 mm) GB/T9119 PN16, SO/RF	23.46 (596)	23.51 (597)	23.38 (594)	28.15 (715)	22.44 (570)	13.58 (345)	24.02 (610)	3.13 (80)	555 (252)
20-in. (500 mm) GB/T9119 PN40, SO/RF	23.46 (596)	23.51 (597)	23.38 (594)	29.72 (755)	22.44 (570)	13.58 (345)	24.21 (615)	3.13 (80)	978 (444)

Table 27: Raised face flanged sensor 20- to 36-in. (500 mm to 900 mm) dimensions *(continued)*

Size, description	Overall length			Dim B	Dim C	Dim D	Dim J	Dim K	Flow tube wgt (lbs./ kg)
	Dim A PTFE	Dim A Neoprene	Dim A Poly						
24-in. (600 mm) ASME - 150, SO/RF	23.46 (596)	23.51 (597)	23.63 (600)	32.00 (813)	26.50 (673)	15.61 (396)	27.25 (692)	3.13 (80)	634 (287)
24-in. (600 mm) ASME - 300, SO/RF	23.46 (596)	23.51 (597)	23.63 (600)	36.00 (914)	26.50 (673)	15.61 (396)	27.25 (692)	3.13 (80)	1335 (606)
24-in. (600 mm) EN 1092-1 - PN10, SO/RF	23.46 (596)	23.51 (597)	23.63 (600)	30.71 (780)	26.50 (673)	15.61 (396)	26.97 (685)	3.13 (80)	466 (211)
24-in. (600 mm) EN 1092-1 - PN16, SO/RF	23.46 (596)	23.51 (597)	23.63 (600)	33.07 (840)	26.50 (673)	15.61 (396)	28.54 (725)	3.13 (80)	665 (302)
24-in. (600 mm) EN 1092-1 - PN25, SO/RF	23.46 (596)	23.51 (597)	23.63 (600)	33.27 (845)	26.50 (673)	15.61 (396)	28.35 (720)	3.13 (80)	938 (426)
24-in. (600 mm) EN 1092-1 - PN40, SO/RF	23.46 (596)	23.51 (597)	23.63 (600)	35.04 (890)	26.50 (673)	15.61 (396)	28.94 (735)	3.13 (80)	1207 (528)
24-in. (600 mm) AS 2129 table D, SO/RF	23.46 (596)	23.51 (597)	23.63 (600)	32.48 (825)	26.50 (673)	15.61 (396)	28.35 (720)	3.13 (80)	501 (227)
24-in. (600 mm) AS 2129 table E, SO/RF	23.46 (596)	23.51 (597)	23.63 (600)	32.48 (825)	26.50 (673)	15.61 (396)	28.23 (717)	3.13 (80)	625 (283)
24-in. (600 mm) JIS B2220 - 10K, SO/RF	23.46 (596)	23.51 (597)	23.63 (600)	31.30 (795)	26.50 (673)	15.61 (396)	27.17 (690)	3.13 (80)	451 (204)
24-in. (600 mm) AS 4087 PN16, SO/RF	23.46 (596)	23.51 (597)	23.63 (600)	32.48 (825)	26.50 (673)	15.61 (396)	28.35 (720)	3.13 (80)	1133 (514)
24-in. (600 mm) AS 4087 PN21,SO/RF	23.46 (596)	23.51 (597)	23.63 (600)	33.47 (850)	26.50 (673)	15.61 (396)	29.09 (739)	3.13 (80)	1605 (728)
24-in. (600 mm) AS 4087 PN35, SO/RF	23.46 (596)	23.51 (597)	23.63 (600)	33.47 (850)	26.50 (673)	15.61 (396)	27.52 (699)	3.13 (80)	1777 (806)
24-in. (600 mm) GB/T 9119 PN10, SO/RF	23.46 (596)	23.51 (597)	23.63 (600)	30.71 (780)	26.50 (673)	15.61 (396)	26.97 (685)	3.13 (80)	486 (221)
24-in. (600 mm) GB/T 9119 PN16, SO/RF	23.46 (596)	23.51 (597)	23.63 (600)	33.07 (840)	26.50 (673)	15.61 (396)	28.54 (725)	3.13 (80)	669 (304)
24-in. (600 mm) GB/T 9119 PN40, SO/RF	23.46 (596)	23.51 (597)	23.63 (600)	35.04 (890)	26.50 (673)	15.61 (396)	28.94 (735)	3.13 (80)	1282 (581)
30-in. (750 mm) AS 2129 table D, SO/RF	29.34 (745)	29.39 (747)	29.26 (743)	39.17 (995)	33.00 (838)	16.38 (416)	34.96 (888)	3.13 (80)	929 (421)
30-in. (750 mm) AS 2129 table E, SO/RF	29.34 (745)	29.39 (747)	29.26 (743)	39.17 (995)	33.00 (838)	16.38 (416)	33.75 (857)	3.13 (80)	1059 (480)
30-in. (750 mm) AS 4087 PN16, SO/RF	29.34 (745)	29.39 (747)	29.26 (743)	39.17 (995)	33.00 (838)	16.38 (416)	34.96 (888)	3.13 (80)	975 (442)
30-in. (750 mm) AS 4087 PN21, SO/RF	29.34 (745)	29.39 (747)	29.26 (743)	39.96 (1015)	33.00 (838)	16.38 (416)	33.35 (898)	3.13 (80)	948 (430)
30-in. (750 mm) AS 4087 PN35, SO/RF	29.34 (745)	29.39 (747)	29.26 (743)	39.96 (1015)	33.00 (838)	16.38 (416)	33.35 (898)	3.13 (80)	2096 (950)

Table 27: Raised face flanged sensor 20- to 36-in. (500 mm to 900 mm) dimensions *(continued)*

Size, description	Overall length			Dim B	Dim C	Dim D	Dim J	Dim K	Flow tube wgt (lbs./ kg)
	Dim A PTFE	Dim A Neoprene	Dim A Poly						
30-in. (750 mm) JIS B2220 - 10K, SO/RF	29.34 (745)	29.39 (747)	29.26 (743)	38.19 (970)	33.00 (838)	16.38 (416)	33.66 (855)	3.13 (80)	862 (392)
36-in. (900 mm) AS 2129 table D, SO/RF	35.25 (895)	35.30 (897)	35.17 (893)	46.26 (1175)	39.00 (991)	21.86 (555)	41.34 (1050)	3.13 (80)	1396 (633)
36-in. (900 mm) AS 2129 table E, SO/RF	35.25 (895)	35.30 (897)	35.17 (893)	46.26 (1175)	39.00 (991)	21.86 (555)	41.34 (1050)	3.13 (80)	1648 (747)
36-in. (900 mm) AS 4087 PN16, SO/RF	35.25 (895)	35.30 (897)	35.17 (893)	46.26 (1175)	39.00 (991)	21.86 (555)	41.34 (1050)	3.13 (80)	1574 (714)
36-in. (900 mm) AS 4087 PN21,SO/RF	35.25 (895)	35.30 (897)	35.17 (893)	46.26 (1175)	39.00 (991)	21.86 (555)	41.73 (1060)	3.13 (80)	2197 (997)
36-in. (900 mm) AS 4087 PN35, SO/RF	35.25 (895)	35.30 (897)	35.17 (893)	46.65 (1185)	39.00 (991)	21.86 (555)	40.55 (1030)	3.13 (80)	3133 (1421)
36-in. (900 mm) GB/T9119 PN10, SO/RF	35.25 (895)	35.30 (897)	35.17 (893)	43.9 (1115)	39.00 (991)	21.86 (555)	39.57 (1005)	3.13 (80)	1209 (549)
36-in. (900 mm) GB/T9119 PN16, SO/RF	35.25 (895)	35.30 (897)	35.17 (893)	44.29 (1125)	39.00 (991)	21.86 (555)	39.37 (1000)	3.13 (80)	1429 (649)
36-in. (900 mm) EN 1092-1 - PN10, SO/RF	35.25 (895)	35.30 (897)	35.17 (893)	43.90 (1120)	39.00 (991)	21.86 (555)	39.57 (1005)	3.13 (80)	1364 (619)
36-in. (900 mm) EN 1092-1 - PN16, SO/RF	35.25 (895)	35.30 (897)	35.17 (893)	44.29 (1125)	39.00 (991)	21.86 (555)	39.37 (1000)	3.13 (80)	1719 (780)
36-in. (900 mm) JIS B2220 - 10K, SO/RF	35.25 (895)	35.30 (897)	35.17 (893)	44.09 (1120)	39.00 (991)	21.86 (555)	39.57 (1005)	3.13 (80)	1194 (543)

Table 28: Raised face flanged sensor 40-in. and 48-in. (1000 mm and 1200 mm) dimensions

Size, description	Overall length			Dim B	Dim C	Dim D	Dim J	Dim K	Flow tube wgt (lbs./ kg)
	Dim A PTFE	Dim A Neoprene	Dim A Poly						
40-in. (1000 mm) EN 1092-1 - PN10, SO/RF	N/A	39.40 (1001)	NA	48.43 (1230)	47.27 (1201)	25.86 (657)	43.70 (1110)	3.38 86)	1444 (655)
40-in. (1000 mm) EN 1092-1 - PN16, SO/RF	N/A	39.40 (1001)	NA	49.41 (1255)	47.27 (1201)	25.86 (657)	43.90 (1115)	3.38 86)	1559 (707)
40-in. (1000 mm) AS 2129 table D, SO/RF	N/A	39.40 (1001)	NA	49.41 (1255)	47.27 (1201)	25.86 (657)	44.61 (1133)	3.38 86)	1494 (678)
40-in. (1000 mm) AS 2129 table E, SO/RF	N/A	39.40 (1001)	NA	49.41 (1255)	47.27 (1201)	25.86 (657)	44.49 (1130)	3.38 86)	1806 (819)
40-in. (1000 mm) AS 4087 PN16, SO/RF	N/A	39.40 (1001)	NA	49.41 (1255)	47.27 (1201)	25.86 (657)	44.61 (1133)	3.38 86)	2175 (987)
40-in. (1000 mm) AS 4087 PN21, SO/RF	N/A	39.40 (1001)	NA	50.20 (1275)	47.27 (1201)	25.86 (657)	45.24 (149)	3.38 86)	2464 (1118)

Table 28: Raised face flanged sensor 40-in. and 48-in. (1000 mm and 1200 mm) dimensions *(continued)*

Size, description	Overall length			Dim B	Dim C	Dim D	Dim J	Dim K	Flow tube wgt (lbs./ kg)
	Dim A PTFE	Dim A Neoprene	Dim A Poly						
40-in. (1000 mm) GB/T9119 PN10, SO/RF	N/A	39.40 (1001)	NA	48.43 (1230)	47.27 (1201)	25.86 (657)	43.70 (1110)	3.38 86)	1576 (715)
40-in. (1000 mm) GB/T9119 PN16, SO/RF	N/A	39.40 (1001)	NA	49.41 (1255)	47.27 (1201)	25.86 (657)	43.90 (1115)	3.38 86)	1735 (787)
48-in. (1200 mm) EN 1092-1 - PN10, SO/RF	N/A	47.20 (1199)	NA	57.28 (1455)	55.27 (1404)	29.86 (758)	52.36 (1330)	3.38 86)	1949 (884)
48-in. (1200 mm) AS 2129 table D, SO/RF	N/A	47.20 (1199)	NA	58.66 (1490)	55.27 (1404)	29.86 (758)	53.86 (1368)	3.38 86)	2068 (938)
48-in. (1200 mm) AS 2129 table E,SO/RF	N/A	47.20 (1199)	NA	58.66 (1490)	55.27 (1404)	29.86 (758)	53.74 (1365)	3.38 86)	2680 (1216)
48-in. (1200) AS 4087 PN16, SO/RF	N/A	47.20 (1199)	NA	58.66 (1490)	55.27 (1404)	29.86 (758)	53.86 (1368)	3.38 86)	2703 (1226)
48-in. (1200 mm) AS 4087 PN21,SO/RF	N/A	47.20 (1199)	NA	60.24 (1530)	55.27 (1404)	29.86 (758)	54.53 (1385)	3.38 86)	3152 (1430)
48-in. (1200 mm) GB/T9119 PN10, SO/RF	N/A	47.20 (1199)	NA	57.28 (1455)	55.27 (1404)	29.86 (758)	52.36 (1330)	3.38 86)	2081 (944)
48-in. (1200 mm) GB/T9119 PN16, SO/RF	N/A	47.20 (1199)	NA	58.46 (1485)	55.27 (1404)	29.86 (758)	52.36 (1330)	3.38 86)	2832 (1284)

Figure 13: Flat face sensor 30- to 48-kin. (750 mm to 1200 mm)

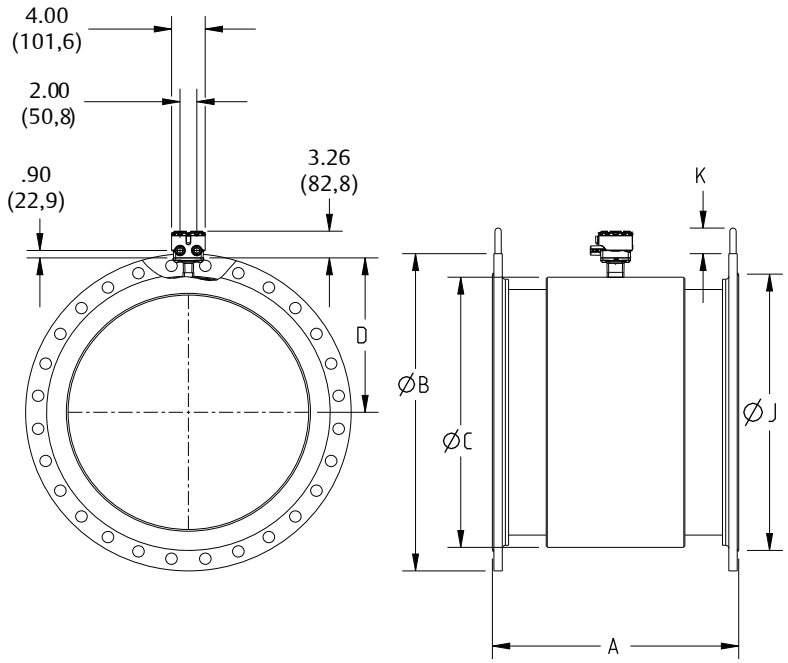

- F - Flange bolts to straddle center line

Table 29: Flat face sensor 30- to 48-in. (750 mm to 1200 mm) dimensions

Size, description	Length			Dim B	Dim C	Dim D	Liner Ø on face			Dim K	Flow tube wgt (lbs./kg)
	Dim A PTFE	Dim A Neoprene	Dim A Poly				Dim J PTFE	Dim J Neoprene	Dim J Poly		
30-in. (750 mm) AWWA CLASS D, SO/FF	29.34 (745)	29.39 (747)	29.26 (743)	38.75 (984)	33.00 (838)	16.38 (416)	33.75 (857)	38.75 (984)	33.75 (857)	3.13 (80)	789 (358)
30-in. (750 mm) AWWA CLASS E, SO/FF	29.34 (745)	29.39 (747)	29.26 (743)	38.75 (984)	33.00 (838)	16.38 (416)	33.75 (857)	38.75 (984)	33.75 (857)	3.13 (80)	1205 (548)
30-in. (750 mm) AWWA CLASS F, SO/FF	29.34 (745)	29.39 (747)	29.26 (743)	43.00 (1092)	33.00 (838)	16.38 (416)	33.75 (857)	43.0 (1092)	33.75 (857)	3.13 (80)	1795 (816)
36-in. (900) AWWA C207 CLASS D, SO/FF	35.25 (825)	35.3 (897)	35.17 (893)	46.00 (1168)	39.00 (991)	21.86 (555)	40.25 (1022)	40.25 (1022)	40.25 (1022)	3.13 (80)	1148 (521)
36-in. (900 mm) AWWA C207 CLASS E, SO/FF	35.25 (825)	35.30 (897)	35.17 (893)	46.00 (1168)	39.00 (991)	21.86 (555)	40.25 (1022)	46.00 (1168)	40.25 (1022)	3.13 (80)	1911 (867)
36-in. (900 mm) AWWA C207CLASS F, SO/FF	35.25 (825)	35.30 (897)	35.17 (893)	50.00 (1270)	39.00 (991)	21.86 (555)	40.25 (1022)	50.00 (1270)	40.25 (1022)	3.13 (80)	2651 (1202)
40-in. (1000 mm) AWWA CLASS D, SO/FF	N/A	39.40 (1001)	N/A	50.75 (1289)	47.27 (1201)	25.86 (657)	N/A	50.75 (1289)	N/A	3.38 (86)	1435 (651)
40-in. (1000 mm) AWWA CLASS E, SO/FF	N/A	39.40 (1001)	N/A	50.75 (1289)	47.27 (1201)	25.86 (657)	N/A	50.75 (1289)	N/A	3.38 (86)	2464 (1118)
42-in. (1050 mm) AWWA CLASS D, SO/FF	N/A	42.00 (1067)	N/A	53.00 (1346)	49.27 (1251)	26.86 (682)	N/A	53.00 (1346)	N/A	3.38 (86)	1550 (703)
42-in. (1050 mm) AWWA CLASS E, SO/FF	N/A	42.00 (1067)	N/A	53.00 (1346)	49.27 (1251)	26.86 (682)	N/A	53.00 (1346)	N/A	3.38 (86)	2400 (1089)
48-in. (1200 mm) AWWA CLASS D, SO/FF	N/A	47.2 (1199)	N/A	59.50 (1511)	55.27 (1404)	29.86 (758)	N/A	59.50 (1511)	N/A	3.38 (86)	1892 (848)

Figure 14: Flanged sensor ½- to 48-in. (15 mm to 1200 mm) grounding ring

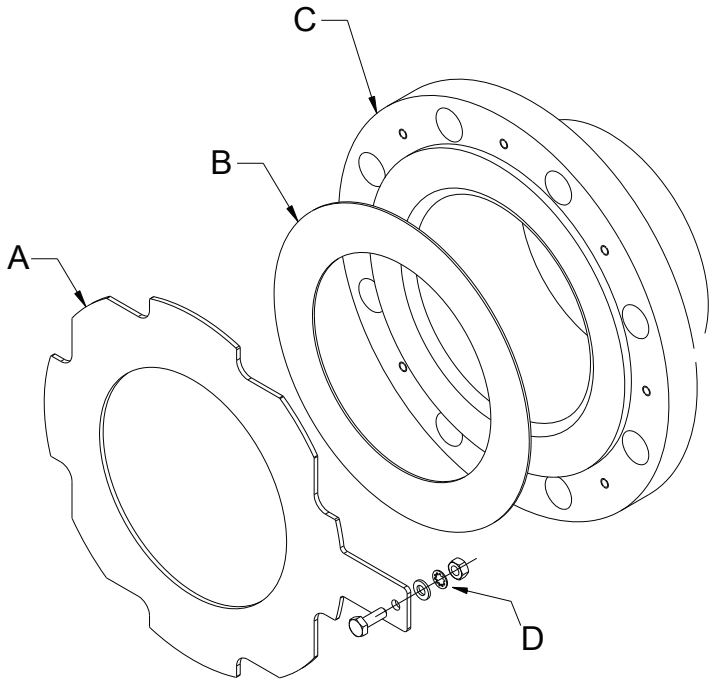

A. Grounding ring
B. Customer supplied gasket
C. Flow tube
D. Grounding strap hardware

Table 30: Flanged sensor ½- to 48-in. (15 mm to 1200 mm) grounding ring dimensions

	Single grounding ring thickness		Double grounding ring thickness	
	Min	Max	Min	Max
0.5-in. (15 mm)	0.059 (1,5)	N/A	0.12 (3)	N/A
1-in. (25 mm)	0.059 (1,5)	N/A	0.12 (3)	N/A
1.5-in. (40 mm)	0.059 (1,5)	N/A	0.12 (3)	N/A
2-in. (50 mm)	0.059 (1,5)	N/A	0.12 (3)	N/A
2.5-in. (65 mm)	0.059 (1,5)	N/A	0.12 (3)	N/A
3-in. (80 mm)	0.059 (1,5)	N/A	0.12 (3)	N/A
4-in. (100 mm)	0.059 (1,5)	N/A	0.12 (3)	N/A
5-in. (125 mm)	0.059 (1,5)	0.12 (3)	0.12 (3)	0.24 (6,1)
6-in. (150 mm)	0.059 (1,5)	N/A	0.12 (3)	N/A
8-in. (200 mm)	0.059 (1,5)	N/A	0.12 (3)	N/A
10-in. (250mm)	0.059 (1,5)	N/A	0.12 (3)	N/A
12-in. (300mm)	0.059 (1,5)	0.12 (3)	0.12 (3)	0.24 (6,1)
14-in. (350mm)	0.12 (3)	0.25 (6,4)	0.24 (6,1)	0.5 (12,7)
16-in. (400mm)	0.12 (3)	0.25 (6,4)	0.24 (6,1)	0.5 (12,7)
18-in. (450mm)	0.12 (3)	0.25 (6,4)	0.24 (6,1)	0.5 (12,7)

Table 30: Flanged sensor ½- to 48-in. (15 mm to 1200 mm) grounding ring dimensions *(continued)*

	Single grounding ring thickness		Double grounding ring thickness	
	Min	**Max**	**Min**	**Max**
20-in. (500mm)	0.12 (3)	0.25 (6,4)	0.24 (6,1)	0.5 (12,7)
24-in. (600mm)	0.187 (4,7)	0.25 (6,4)	0.374 (9.5)	0.5 (12,7)
30-in. (750mm)	0.187 (4,7)	0.25 (6,4)	0.374 (9.5)	0.5 (12,7)
36-in. (900mm)	0.187 (4,7)	0.25 (6,4)	0.374 (9.5)	0.5 (12,7)
40-in. (1000 mm)	0.25 (6,4)	N/A	0.5 (12,7)	N/A
42-in. (1050 mm)	0.25 (6,4)	N/A	0.5 (12,7)	N/A
48-in. (1200 mm)	0.25 (6,4)	N/A	0.5 (12,7)	N/A

00813-0300-4750
Rev. CC
October 2022

For more information: **www.emerson.com**

©2022 Rosemount, Inc. All rights reserved.

The Emerson and Rosemount logos are trademarks and service marks of Emerson Electric Co. All other marks are property of their respective owners.

ROSEMOUNT™

EMERSON™