Product Data Sheet
00813-0100-4004, Rev KK
November 2024

Rosemount™ 8800D Vortex Flowmeter



Industry Leading Vortex

- HART®, FOUNDATION™ Fieldbus, and Modbus® RS-485 Protocols
- All welded, non-clog design provides maximum performance, reliability and enhanced safety by eliminating ports and gaskets.
- CriticalProcess™ increases process availability and enhances overall safety.
- SIL 2/3 Capable: IEC 61508 certified by an accredited 3rd party agency for use in safety instrumented systems up to SIL 3.
- Available with optional multivariable output. Internal temperature compensation provides cost-effective saturated steam and liquid mass flow measurement.
- Adaptive Digital Signal Processing (ADSP) provides vibration immunity and flow range optimization.
- Reducer™ Vortex extends the measurable flow range, reduces installation costs, and minimizes project risk.
- Simplified troubleshooting through device diagnostics and meter verification.
- Available in wafer, flanged, dual, quad, weld end, threaded end, reducer, and high pressure designs.

Product Overview

Rosemount 8800 selection guide

Rosemount 8800 Flanged vortex flow meter



- Wide range of flange ratings available
- Ideal for all applications from general purpose to the most demanding applications
- Available with ½ inch through 12 inch (15 mm through 300 mm) line sizes

Rosemount 8800 Reducer vortex flow meter

- Flanged vortex flow meter with reducing flanges integrated into the design
- Reduces cost by eliminating the need for field assembly of reduced piping
- Both reducer and standard vortex have a common face-to-face dimension which allows the user to change the meter without impacting the piping layout or drawing
- Available with 1 inch through 14 inch (25 mm through 350 mm) line sizes



Contents

Product Overview 2
Flow rate sizing 10
Ordering Information - Single/Dual transmitter 11
Ordering information – Quad transmitter 19
Product Specifications 28
Product certifications 53
Dimensional drawings 54

Rosemount 8800 MultiVariable vortex flow meter



- Integral temperature sensor enables temperature compensated mass flow for saturated steam and liquids
- Incorporates temperature sensor into the vortex meter using the shedder bar as a thermowell, which keeps the vortex and temperature sensors isolated from process for easy verification and replacement
- Capability to capture a pressure input from a HART® pressure device for pressure compensation mass flow for saturated steam
- Pressure and Temperature compensation mass flow for Superheated Steam
- Superheat Diagnostics allows for an alert and/or alarm to activate when degrees of superheat are close to saturated conditions.
- Available with integrated thermowell for 1½ inch through 12 inch (40 mm through 300 mm) Flanged and 2 inch through 12 inch (50 mm through 300 mm) Reducer Vortex meter body sizes

Rosemount 8800 Wafer vortex flow meter

- Lightweight, cost-effective solution
- Easy installation with standard alignment rings
- Ideal for utility applications
- Available with ½ inch through 8 inch (15 mm through 200 mm) line sizes



Rosemount 8800 Weld-end vortex flow meter



- Flange gaskets are eliminated by welding the flow meter directly into your process piping
- The only vortex flow meter available with zero potential leak points
- Ideal for applications where reducing potential leak points is important
- Available with ½ inch through 12 inch (15 mm through 300 mm) line sizes

Rosemount 8800 Threaded End vortex flow meter



- Easy installation by matching existing threaded pipe union
- Reduce cost by eliminating flanged connections
- Available for ½ inch through 2 inch (15 mm through 50 mm) and 1 inch through 2 inch (25 mm through 50 mm) Reducer meter body sizes

Rosemount 8800 Dual vortex flow meter



- Flanged vortex flow meter with redundant electronics and sensors
- Use for SIS and other applications where redundancy is critical
- Available with ½ inch through 12 inch (15 mm through 300 mm) line sizes

Rosemount 8800 Quad vortex flow meter

- Emerson delivers an integrated quadruple sensor configuration providing 2oo3 voting plus an addition independent output for process control
- Reduce installation costs with a simple drop-in solution
- Decrease operating expenses and maintenance over traditional dP orifice flow meters
- Excellent rangeability and no need for zeroing
- Couple with the CriticalProcess (CPA) option to ensure ultimate safety and reliability
- Transmitters available with independent configurations
- Available with 2 inch through 12 inch (50 mm through 300 mm) line sizes

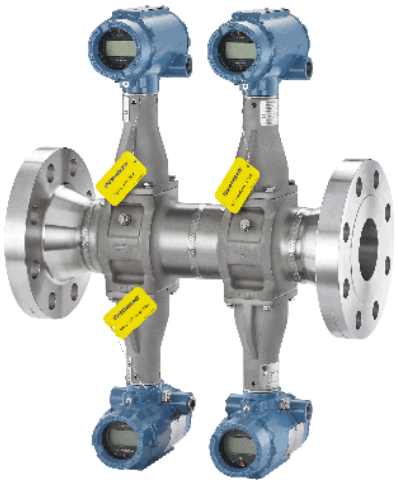

The Rosemount 8800D delivers reliability, safety, and maximum process availability



- Rosemount Reliability — The Rosemount 8800D Vortex eliminates impulse lines, ports, and gaskets to improve reliability.
- Non-clog Design — Unique all welded, gasket-free construction which has no ports or crevices that can clog.
- SIL 2/3 Capable — The Rosemount 8800D Vortex is certified by an accredited 3rd party agency for use in safety instrumented systems up to SIL 3 (minimum requirement of single use [1oo1] for SIL 2 and redundant use [1oo2] for SIL 3).
- Vibration Immunity — Mass balancing of the sensor system, and Adaptive Digital Signal Processing (ADSP) provide vibration immunity.
- Replaceable Sensor — The sensor is isolated from the process and can be replaced without breaking the process seal. All line sizes use the same sensor design allowing a single spare to serve every meter.
- Simplified Troubleshooting — Device Diagnostics enable field verification of meter electronics and sensor without process shutdown.

The Rosemount 8800D Critical Process Vortex increases process availability and enhances overall safety



Eliminate bypass piping for critical process installations

Traditional vortex installations in critical applications include a bypass line to allow process fluid to be redirected around the vortex flow meter during routine sensor maintenance. Rosemount's unique non-wetted sensor can be installed without bypass piping, even in the most difficult process environments.

Improve process availability

Eliminate the need to shut down the process during routine maintenance and meter verification.

Enhances safety in hazardous process fluid applications

A Critical Process Valve (CPA option) enables access to the sensor cavity to verify that no process fluid is present.

The Rosemount 8800D MultiVariable™ flowmeter boosts reliability, confidence, and control while reducing safety risks, maintenance costs, and down time in liquid and steam flow applications

MTA MultiVariable Output with Temperature Compensation provided by integral temperature sensor for saturated steam or compensated liquids

MPA MultiVariable Output with Pressure Compensation provided by external pressure device with HART burst mode for saturated steam

MCA MultiVariable Output with Temperature and Pressure Compensation provided by integral temperature sensor and external pressure device with HART burst mode for superheated or saturated steam



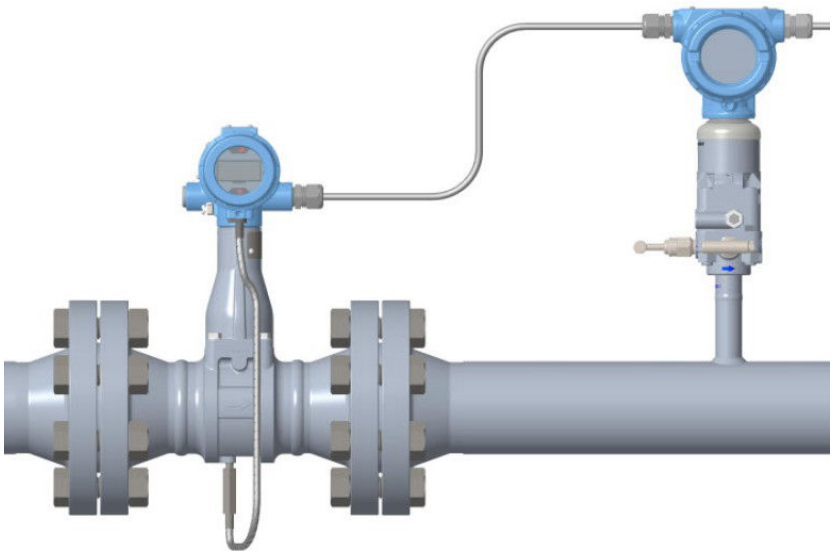

Gain confidence in your mass flow measurement accuracy

Emerson MultiVariable Vortex provides the highest level of accurate steam mass flow over the widest range using an external pressure and/or internal temperature measurement to capture your dynamic operating conditions. This delivers the confidence required for your billing statements and also achieves better control in steam applications.

Reduce safety risks and maintenance burdens associated with many-component measurement solutions

By selecting Emerson MultiVariable Vortex, the safety risk to operators is reducing while at the same time, the maintenance required is reduced and simplified. The plant area shutdown requirements are reduced while performing maintenance or verification tasks, which also reduces the cost implications of being offline.

Overcome challenges of steam mass-flow measurement with a more durable solution

Emerson MultiVariable Vortex delivers the performance confidence and system reliability required in steam applications. Cost implications related to poor quality steam, complex system architecture and process shutdowns are eliminated by reducing vulnerability to leakage, clogging, plugging and freezing.

Reduced installation complexity with the Remote Transmitter



For installations where the transmitter must be located remotely from the sensor, two remote cable styles are available:

- Standard cable can be used for applications where environmental or physical damage is unlikely, or if the cable will be enclosed in conduit.
- Armored cable should be used when maximum reliability or resistance to environmental and physical damage are a concern. Cable glands of appropriate metal type are provided.

Both cable types are offered in standard lengths (10, 20, 33, 50, and 75 ft. [3, 6, 10, 15, and 23 meters]). Standard cable can also be ordered in custom lengths.

Detect process fluid change from liquid to gas with SMART Fluid Diagnostics



Oil and gas separators

- Remotely detect when your separator dump valve allows gas to pass through your water dump leg.
- Selectable alert modes (digital, analog or pulse) signal when gas flow is detected.

Steam, nitrogen, or air blow down

- Control your Clean in Place (CIP) or blow down cycles with a single meter that measures the flow rate of your primary process fluid as well as the change from liquid to gas flow.
- Set your control system to control down cycle based on alert from in-line vortex meter.
- Selectable alert modes (digital, analog or pulse) signal when gas flow is detected.

Provide comparison to external time reference with Elapsed Time Meter

- Running totalizer of hours of operation
- Accuracy 1 hour per year maximum deviation



Access process variables and diagnostics locally with the optional LCD Display



The LCD display can be configured to alternate between selected display options, such as flow, totalizer, mA output, temperature (MTA/MCA) and pressure (MPA/MCA). Diagnostics and fault conditions, when present, will also appear on the display for local troubleshooting. For detailed information, see LCD indicator functional specifications.

Access information when you need it with asset tags

Newly shipped devices include a unique QR code asset tag that enables you to access serialized information directly from the device. With this capability, you can:

- Access device drawings, diagrams, technical documentation, and troubleshooting information in your MyEmerson account
- Improve mean time to repair and maintain efficiency
- Ensure confidence that you have located the correct device
- Eliminate the time-consuming process of locating and transcribing nameplates to view asset information.

Flow rate sizing

Sizing calculations are required to select the proper flow meter size. These calculations provide pressure loss, accuracy, minimum and maximum flow rate data to guide in proper selection. Vortex sizing software can be found using the Sizing & Selection Tool. The Sizing & Selection Tool can be accessed online or downloaded for offline use using this link:

www.Emerson.com/FlowSizing

For reference for typical flow rates for common applications, please see Typical flow velocities and rates or refer to product reference manual 00809-0100-4004 or 00809-1100-4004.

Ordering Information - Single/Dual transmitter



Model code structure

In conjunction with a complete model code string, we strongly recommend every meter be configured at the factory for your application. Use the Rosemount 8800D Configuration Data Sheet (00806-0100-4004) to convey your configuration information to the factory.

Figure 1: Guide to model code structure



A. Model
B. Meter style
C. Line size
D. Wetted material
E. Process connection & pressure rating
F. Sensor process temperature range
G. Housing material & conduit entries
H. Output options
I. Calibration
J. Options

Example model code with one selection out of each required category:

8800D F 020 S A1 N 1 D 1 M5 MTA Q4 Q8

Optimizing lead times

The starred offerings (★) represent the most common options and should be selected for the fastest delivery times. The non-starred offerings can be subject to additional delivery lead time. Please inquire on specific model configurations.

Requirements

Table 1: Requirements - select one from each available choice

Code	Description	
Base model		
8800D	Vortex Flow Meter	★
Meter style		
F	Standard body style for use with flanged, welded, and threaded process connections	★
W	Wafer body style for use with wafer-style process connections	★
R	Reducer – Meter body is one nominal size smaller than line size selection for use with flanged or threaded process connections	★
D[(1)]	Dual-sensor for use with flanged, welded, and threaded process connections	
Line size		
005[(2)]	½ inch (15 mm)	★
010	1 inch (25 mm)	★
015	1½ inch (40 mm)	★
020	2 inch (50 mm)	★
030	3 inch (80 mm)	★
040	4 inch (100 mm)	★
060	6 inch (150 mm)	★
080	8 inch (200 mm)	★
100	10 inch (250 mm)	
120	12 inch (300 mm)	
140[(3)]	14 inch (350 mm)	
Wetted materials		
S	316 wrought stainless and CF-3M cast stainless; Material of construction is 316/316L.	★
H[(4)]	UNS N06022 wrought nickel alloy; CW2M cast nickel alloy.	
C	A105 forged carbon steel and WCB cast carbon steel	
L	LF2 forged carbon steel and LCC cast carbon steel	
D[(5)]	UNS S32760 wrought duplex stainless steel and 6A cast duplex stainless steel	
Process connection style and pressure rating		
A1	ASME B16.5 RF Class 150	★
A3	ASME B16.5 RF Class 300	★
A6	ASME B16.5 RF Class 600	
A7[(6)]	ASME B16.5 RF Class 900	
A8[(7)]	ASME B16.5 RF Class 1500	
K0	EN 1092-1 PN 10 Type B1	
K1[(8)]	EN 1092-1 PN 16 (PN 10/16 for wafer style) Type B1	★
K2	EN 1092-1 PN 25 Type B1	
K3	EN 1092-1 PN 40 (PN 25/40 for wafer style) Type B1	★
K4	EN 1092-1 PN 63 Type B1	

Table 1: Requirements - select one from each available choice *(continued)*

Code	Description	
K6	EN 1092-1 PN 100 Type B1	
K7[6]	EN 1092-1 PN 160 Type B1	
K8[7]	EN 1092-1 PN 250 Type B1	
B1[9]	ASME B16.5 RTJ Class 150 for flange-style only	
B3	ASME B16.5 RTJ Class 300 for flange-style only	
B6	ASME B16.5 RTJ Class 600 for flange-style only	
B7[6]	ASME B16.5 RTJ Class 900 for flange-style only	
B8[7]	ASME B16.5 RTJ Class 1500 for flange-style only	
C1	ASME B16.5 RF Class 150, smooth finish	
C3	ASME B16.5 RF Class 300, smooth finish	
C6	ASME B16.5 RF Class 600, smooth finish	
C7[6]	ASME B16.5 RF Class 900, smooth finish	
C8[7]	ASME B16.5 RF Class 1500, smooth finish	
J1	JIS 10K	
J2	JIS 20K	
J4	JIS 40K	
L0	EN 1092-1 PN 10 Type B2	
L1[8]	EN 1092-1 PN 16 (PN 10/16 for wafer style) Type B2	
L2	EN 1092-1 PN 25 Type B2	
L3	EN 1092-1 PN 40 (PN 25/40 for wafer style) Type B2	
L4	EN 1092-1 PN 63 Type B2	
L6	EN 1092-1 PN 100 Type B2	
L7[6]	EN 1092-1 PN 160 Type B2	
M0	EN 1092-1 PN 10 Type D for flange style only	
M1[8]	EN 1092-1 PN 16 Type D for flange style only	
M2	EN 1092-1 PN 25 Type D for flange style only	
M3	EN 1092-1 PN 40 Type D for flange style only	
M4	EN 1092-1 PN 63 Type D for flange style only	
M6	EN 1092-1 PN 100 Type D for flange style only	
M7[6]	EN 1092-1 PN 160 Type D for flange style only	
N0	EN 1092-1 PN 10 Type F	
N1[8]	EN 1092-1 PN 16 Type F	
N2	EN 1092-1 PN 25 Type F	
N3	EN 1092-1 PN 40Type F	
N4	EN 1092-1 PN 63 Type F	
N6	EN 1092-1 PN 100 Type F	
N7[6]	EN 1092-1 PN 160 Type F	
T8[10]	Threaded End process connections, NPT, Schedule 80S	

Table 1: Requirements - select one from each available choice *(continued)*

Code	Description	
T9[11]	Threaded End process connections, NPT, Schedule 160S	
W1[12]	Weld-end, Schedule 10S	
W4[12]	Weld-end, Schedule 40S	
W8[9][12]	Weld-end, Schedule 80S	
W9[12]	Weld-end, Schedule 160S	
Sensor process temperature range		
N[13]	Standard: –40 to +450 °F (–40 to +232 °C)	★
E[13]	Extended: –330 to +800 °F (–200 to +427 °C)	★
S[13]	Severe service: –330 to +842 °F (–200 to +450 °C) and nickel alloy construction for increased corrosion resistance	★
Housing material and conduit entries		
1	Aluminum housing, two ½–14 NPT conduit entries	★
2[14]	Aluminum housing, two M20 x 1.5 conduit entries	★
3[14]	Aluminum housing, two PG 13.5 conduit adapters	★
4	Aluminum housing, one G1/2 conduit adapter (one conduit entry)	★
5	Aluminum housing, two G1/2 conduit adapters (two conduit entries)	★
6	Stainless steel housing, two ½–14 NPT conduit entries	
7[14]	Stainless steel housing, two M20 x 1.5 conduit entries	
Outputs		
D	4–20 mA digital electronics (HART protocol)	★
P	4–20 mA digital electronics (HART protocol) with scaled pulse	★
F[15][16]	FOUNDATION Fieldbus digital signal	★
M[15][16]	Modbus RS-485 (device status and 4 dynamic variables)	★
Calibration		
1	Flow calibration	★

(1) *Duals from ½ inch through 4 inch (15 mm through 100 mm) have dual bar meter body design. Duals from 6 inch through 12 inch (150 mm through 350 mm) have single bar meter body design. Please contact an Emerson Flow representative for more information on 2 inch through 4 inch (50 mm to 100 mm) on single bar dual meter body design.*
(2) *Not available for Rosemount 8800DR.*
(3) *Code 140 (14 inch [350 mm]) size is only available with reducer.*
(4) *See Table 17 for collared vs. weld neck flange configuration.*
(5) *Available in Flanged and Dual from 6 inch through 12 inch and Reducer from 8 inch through 12 inch Class 1500 in 6 inch and 8 inch meter body sizes and Class 900 in 10 inch through 12 inch meter body sizes.*
(6) *Available on flanged and dual style meters from ½ inch through 8 inch (15–200 mm) and reducer style meters from 1 inch through 8 inch (25–200 mm). Also available in 10 inch through 12 inch (250-300 mm) flanged and dual meters along with 12 inch (300 mm) reducers when using Super Duplex material of construction.*
(7) *Available for flange and dual style meters from 1 inch through 8 inch (25–200 mm) and reducer style meters from 1.5 inch through 10 inch (40–250 mm).*
(8) *For line sizes using EN 1092 flanges that share dimensions with higher rated flanges, the highest rated flange will be used in manufacturing. Example: 8800DF020 with "K1" (PN16) will be built using PN40 flanges.*
(9) *Not available with ½ inch line size.*
(10) *Available with Meter style code F and D from ½ inch through 2 inch (15 mm through 50 mm) line sizes and Meter style code R (reducer) in 1 inch (25 mm) line sizes with Wetted materials codes S and D.*
(11) *Available in Meter style code F and D from ½ inch through 2 inch (15 mm through 50 mm) line sizes and Meter style code R (reducer) in 1½ inch and 2 inch (40 mm and 50 mm) line sizes with Wetted materials codes S and D.*
(12) *Only available with Meter Style F or D.*

(13) *See Table 10 and Table 14 for the specific sensor process temperature range. Meters that include the PD option code are compliant with the EU Pressure Equipment Directive, PED, 2014/68/EU and the UK Pressure Equipment (Safety) Regulation, PER, Statutory Instrument, SI No. 1105.*
(14) *No Japan (E4) approval.*
(15) *The Safety Certifications SI option code is not available with this option.*
(16) *MultiVariable option codes MPA and MCA not available with this option.*

Options

Select only as needed.

Table 2: Options

Code	Description	
Hazardous area approvals		
E5	US Approvals Explosion-proof and Dust Ignition-proof	★
I5	US Approvals Intrinsically Safe and Non-Incendive	★
IE(1)	US Approvals FISCO Intrinsically Safe and Non-Incendive	★
K5	US Approvals Explosion-proof, Dust Ignition-proof, Intrinsically Safe, and Non-Incendive	★
E6	US/Canadian Approvals Explosion-proof and Dust Ignition-proof	★
I6	US/Canadian Approvals Intrinsically Safe and Division 2	★
IF(1)	US/Canadian Approvals FISCO Intrinsically Safe and Division 2	★
K6	US/Canadian Approvals Explosion-proof, Dust Ignition-proof, Intrinsically Safe, and Division 2	★
KB	US/Canadian Approvals Explosion-proof, Dust Ignition-proof, Intrinsically Safe, and Division 2	★
E1	ATEX Flameproof	★
I1	ATEX Intrinsic Safety ia; Intrinsic Safety ic	★
IA(1)	ATEX FISCO Intrinsic Safety	★
N1	ATEX Type n	★
ND	ATEX Dust	★
K1	ATEX Flameproof; Intrinsic Safety; Type n; Dust	★
E7	IECEx Flameproof	★
I7	IECEx Intrinsic Safety	★
IG(1)	IECEx FISCO Intrinsic Safety	★
N7	IECEx Type n	★
NF	IECEx Dust	★
K7	IECEx Flameproof; Intrinsic Safety; Type n; Dust	★
E2	INMETRO Flameproof	★
I2	INMETRO Intrinsic Safety	★
IB(1)	INMETRO FISCO Intrinsic Safety	★
K2	INMETRO Flameproof; Intrinsic Safety	★
E3	NEPSI Flameproof	★
I3	NEPSI Intrinsic Safety	★
N3	NEPSI Increased Safety - Ex ec	★
IH(1)	NEPSI FISCO/FNICO Intrinsic Safety	★
K3	NEPSI Flameproof, Intrinsic Safety, and Increased Safety - Ex ec	★
E4	Japan Flameproof	★

Table 2: Options *(continued)*

Code	Description	
E8	Technical Regulations Customs Union (EAC) Flameproof and Dust	★
I8	Technical Regulations Customs Union (EAC) Intrinsic Safety and Dust	★
N8	Technical Regulations Customs Union (EAC) Type n and Dust	★
K8	Technical Regulations Customs Union (EAC) Flameproof; Intrinsic Safety; Type n and Dust	★
G8	Technical Regulations Customs Union (EAC) FISCO Intrinsic Safety and Dust	★
E9	KTL (Korea) Flameproof and Dust	★
EW	PESO (India) Flameproof	★
IW	PESO (India) Intrinsically Safe	★
KW	PESO (India) Flameproof, Intrinsically Safe	★
MultiVariable		
MTA[(2)(3)]	MultiVariable Output with Temperature Compensation provided by integral temperature sensor	★
MPA[(2)(4)(5)(6)]	MultiVariable Output with Pressure Compensation provided by *external* pressure device	★
MCA[(2)(3)(4)(5)(6)]	MultiVariable Output with both Temperature and Pressure Compensation provided by integral temperature sensor and *external* pressure device	★
Display type		
M5	LCD indicator	★
Remote electronics		
R10	Remote electronics with 10 ft. (3,0 m) cable	★
R20	Remote electronics with 20 ft. (6,1 m) cable	★
R30	Remote electronics with 30 ft. (9,1 m) cable	★
R33	Remote electronics with 33 ft. (10,1m) cable	★
R50	Remote electronics with 50 ft. (15,2 m) cable	★
R75	Remote electronics with 75 ft. (22,9 m) cable	★
Rxx	Remote Electronics with customer-specified cable length (xx ft., 1 ft. to 75 ft. cable in 1 ft. increments) Example: R15 = 15 ft., R34 = 34 ft.	
A10	Armored remote electronics with 10 ft. (3,0 m) cable	
A20	Armored remote electronics with 20 ft. (6,1 m) cable	
A33	Armored remote electronics with 33 ft. (10,1 m) cable	
A50	Armored remote electronics with 50 ft. (15,2 m) cable	
A75	Armored remote electronics with 75 ft. (22,9 m) cable	
Transient protection		
T1	Transient Protection terminal block	★
Alarm mode		
C4[(7)]	NAMUR alarm and saturation values, high alarm	★
CN[(7)]	NAMUR alarm and saturation values, low alarm	★
Special cleaning		
P2	Special cleaning for oxygen service	★

Table 2: Options *(continued)*

Code	Description	
Ground screw assembly		
V5[8]	External ground screw assembly	★
Plantweb™ control functionality		
A01[9]	Basic Control: One Proportional/Integral/Derivative (PID) Function Block	★
ASME B31.1 code compliance[10]		
J2	ASME B31.1 General compliance	
J7	ASME B31.1 Boiler External Piping (BEP) code stamp	
Conduit electrical connectors		
GE[11][5]	M12, 4-pin, Male Connector (eurofast®)	
GM[11][5]	A size Mini, 4-pin, Male Connector (minifast®)	
GN[5]	ATEX Flameproof A size, Mini 4-pin male connector (minifast)	
Special inspections		
QC2	Visual and Dimensional, Quantity, Display and Configuration Inspection with Certificate	
HART revision configuration		
HR7[4][5]	HART Revision 7	★
Process diagnostics		
DS3[2][4][5]	Smart Fluid Diagnostics	★
Safety certifications		
SI[4][5]	Safety Certification of 4–20 mA Output per IEC 61508	★
Quality certificate		
Q4	Calibration Certificate per ISO 10474 3.1/EN 10204 3.1	★
Q5	Hydrostatic Test Certificate	★
Q8	Material Traceability per ISO 10474 3.1/EN 10204 3.1	★
QP	Calibration Certificate per ISO 10474 3.1/EN 10204 3.1 and Tamper Evident Seal	★
Q25	Certificate of Compliance to NACE MR0175 and MR0103	★
Q66	Weld procedure package (weld map, weld procedure specification, weld procedure qualification record, welder performance qualification)	★
Q70[12]	NDE Weld Examination Inspection Certificate, ISO 10474 3.1; see Table 31	
Q71[12]	NDE Weld Examination Inspection Certificate, ISO 10474 3.1 with images; see Table 31	
Q76	Positive Material Identification (PMI) on Flanges and Pipe (XRF), per ASTM E1476-97; see Table 32.	★
Q77	Positive Material Identification (PMI) with Carbon Content on Flange and Pipe (OES) per ASTM E1476-97; see Table 33.	★
Q80[13]	Ferrite Content Testing (FN 3 to 10)	★
Sensor completion		
WG	Witness General	
Pressure Equipment Directive (PED)		
PD	Pressure Equipment Directive (PED)	★

Table 2: Options *(continued)*

Code	Description	
Critical process vortex		
CPA	Critical Process Online Sensor Replacement Not available on: ■ Any wafer-style meter (Meter style code W) ■ Any ½ inch (15 mm) flange (Meter style code F) or 1 inch (25 mm) reducer (Meter syle code R) ■ 1 inch (25 mm) flange (Meter style code F) or 1½ inch (40 mm) reducer (Meter style code R) with JIS 10K, EN PN40, or PN16 flange rating ■ Meters with Wetted Material option code D ■ 6 inch (150 mm) or larger meters with Wetted Material option code H	
Elapsed time meter		
ETM(4)(5)	Elapsed time meter	★
Quick Start Guide language (default is English)		
YF	French	★
YG	German	★
YI	Italian	★
YJ	Japanese	★
YK	Korean	★
YM	Chinese (Mandarin)	★
YP	Portuguese	★
YR	Russian	★
YS	Spanish	★

(1) *Fieldbus Intrinsic Safe Concept (FISCO) available with output code F (FOUNDATION™ Fieldbus digital signal) only.*
(2) *The Safety Certifications SI option code is not available with this option.*
(3) *Available with Rosemount 8800DF from 1½ inch through 12 inch (40 mm through 300 mm). Available with 8800DR from 2 inch through 12 inch (50 mm through 300 mm). Consult an Emerson Flow representative for line sizes smaller than 1½ inch (40 mm). Not available with 8800DW or 8800DD.*
(4) *Output option code F not available with this option.*
(5) *Output option code M not available with this option.*
(6) *Requires a pressure transmitter that supports HART Burst Mode.*
(7) *NAMUR compliant operation and the alarm latch options are preset at the factory and can be changed to standard operation in the field.*
(8) *Only available for ordinary location. The ground screw is included by default for all hazardous area approvals.*
(9) *Requires output code F.*
(10) *Requires Quality Certificate Q4, Q5, Q8, and NDE Welding Certificate Q70 or Q71.*
(11) *Not available with certain hazardous location certifications. Contact an Emerson Flow representative for details.*
(12) *Available with material option codes S, C, L and H; not available with Meter Style option code W in 1 inch through 4 inch (25 mm through 100 mm) line sizes.*
(13) *Only available with Material option code S.*

Ordering information – Quad transmitter

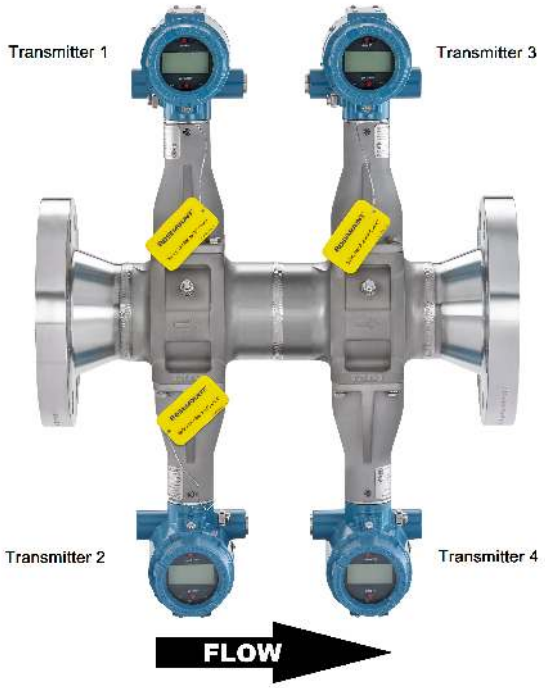

Model code structure

The outputs and hazardous approvals must be specified for each of the four transmitters on a quad transmitter vortex flow meter. As a result, the model code string in those two sections has an entry for each transmitter. The model code string for all other requirements and options has only a single entry applicable to the entire meter. We strongly recommend that every meter, and each transmitter, be configured at the factory for your application. Use the Rosemount 8800D Quad Configuration Data Sheet (00806-1100-4004) to convey your configuration information to the factory.

Example model code with one selection out of each required category:

Figure 2: Guide to model code structure

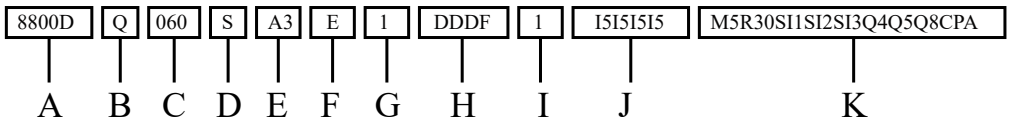

A. Model
B. Meter style
C. Line size
D. Wetted material
E. Process connection & pressure rating
F. Sensor process temperature range
G. Housing material & conduit entries
H. Output options (each transmitter)
I. Calibration
J. Hazardous area approvals (each transmitter)
K. Options

Example model string: 8800DQ 060 S A3 E 1 DDDF 1 I5I5I5IE M5 R30 SI1 SI2 SI3 Q4 Q5 Q8 CPA

Optimizing lead times

The starred offerings (★) represent the most common options and should be selected for the fastest delivery times. The non-starred offerings can be subject to additional delivery lead time. Please inquire on specific model configurations.

Requirements

Table 3: Requirements - select one from each available choice

Code	Description	
Base model		
8800D	Vortex Flow Meter	★
Style		
Q	Quad transmitter (two shedder bars and four transmitters), flanged	★
Line size		
020[1]	2 inch (50 mm)	★
030[1]	3 inch (80 mm)	★
040[1]	4 inch (100 mm)	★
060	6 inch (150 mm)	★
080	8 inch (200 mm)	
100	10 inch (250 mm)	
120	12 inch (300 mm)	

Table 3: Requirements - select one from each available choice *(continued)*

Code	Description	
Wetted materials		
S	316 wrought stainless and CF-3M cast stainless; Material of construction is 316/316L.	★
H	UNS N06022 wrought nickel alloy; CW2M cast nickel alloy; weld neck flange	
C	A105 forged carbon steel and WCB cast carbon steel	
L	LF2 forged carbon steel and LCC cast carbon steel	
D[(2)]	UNS S32760 wrought duplex stainless steel and 6A cast duplex stainless steel	
Process connection style and pressure rating		
A1	ASME B16.5 RF Class 150	★
A3	ASME B16.5 RF Class 300	★
A6	ASME B16.5 RF Class 600	
A7[(3)]	ASME B16.5 RF Class 900	
A8[(4)]	ASME B16.5 RF Class 1500	
K0	EN 1092-1 PN 10 Type B1	
K1	EN 1092-1 PN 16 Type B1	★
K2	EN 1092-1 PN 25 Type B1	
K3	EN 1092-1 PN 40 Type B1	★
K4	EN 1092-1 PN 63 Type B1	
K6	EN 1092-1 PN 100 Type B1	
K7[(3)]	EN 1092-1 PN 160 Type B1	
B1	ASME B16.5 RTJ Class 150	
B3	ASME B16.5 RTJ Class 300	
B6	ASME B16.5 RTJ Class 600	
B7[(3)]	ASME B16.5 RTJ Class 900	
B8[(4)]	ASME B16.5 RTJ Class 1500	
C1	ASME B16.5 RF Class 150, smooth finish	
C3	ASME B16.5 RF Class 300, smooth finish	
C6	ASME B16.5 RF Class 600, smooth finish	
C7[(3)]	ASME B16.5 RF Class 900, smooth finish	
C8[(4)]	ASME B16.5 RF Class 1500, smooth finish	
J1	JIS 10K	
J2	JIS 20K	
J4	JIS 40K	

Table 3: Requirements - select one from each available choice *(continued)*

Code	Description	
L0	EN 1092-1 PN 10 Type B2	
L1	EN 1092-1 PN 16 Type B2	
L2	EN 1092-1 PN 25 Type B2	
L3	EN 1092-1 PN 40 Type B2	
L4	EN 1092-1 PN 63 Type B2	
L6	EN 1092-1 PN 100 Type B2	
L7[3]	EN 1092-1 PN 160 Type B2	
M0	EN 1092-1 PN 10 Type D	
M1	EN 1092-1 PN 16 Type D	
M2	EN 1092-1 PN 25 Type D	
M3	EN 1092-1 PN 40 Type D	
M4	EN 1092-1 PN 63 Type D	
M6	EN 1092-1 PN 100 Type D	
M7[3]	EN 1092-1 PN 160 Type D	
N0	EN 1092-1 PN 10 Type F	
N1	EN 1092-1 PN 16 Type F	
N2	EN 1092-1 PN 25 Type F	
N3	EN 1092-1 PN 40Type F	
N4	EN 1092-1 PN 63 Type F	
N6	EN 1092-1 PN 100 Type F	
N7[3]	EN 1092-1 PN 160 Type F	
W1	Weld-end, Schedule 10S	
W4	Weld-end, Schedule 40S	
W8	Weld-end, Schedule 80S	
W9	Weld-end, Schedule 160S	
Sensor process temperature range		
N[5]	Standard: –40 to +450 °F (–40 to +232 °C)	★
E[5]	Extended: –330 to +800 °F (–200 to +427 °C)	★
S[5]	Severe service: –330 to +842 °F (–200 to +450 °C) and nickel alloy construction for increased corrosion resistance	★
Housing material and conduit entries		
1	Aluminum housing, two ½–14 NPT conduit entries	★
2[6]	Aluminum housing, two M20 x 1.5 conduit entries	★
3[6]	Aluminum housing, two PG 13.5 conduit adapters	★
4	Aluminum housing, one G1/2 conduit adapter (one conduit entry)	★
5	Aluminum housing, two G1/2 conduit adapters (two conduit entries)	★
6	Stainless steel housing, two ½–14 NPT conduit entries	
7[6]	Stainless steel housing, two M20 x 1.5 conduit entries	

Table 3: Requirements - select one from each available choice *(continued)*

Code	Description	
Transmitter 1, 2, 3, 4 output (Make a selection for each transmitter in order)		
D	4–20 mA digital electronics (HART® protocol)	★
P	4–20 mA digital electronics (HART protocol) with scaled pulse	★
F[7]	FOUNDATION™ Fieldbus digital signal	★
M[7]	Modbus® RS-485 (device status and 4 dynamic variables)	★
Calibration		
1	Flow calibration	★
Hazardous area approvals for transmitter 1, 2, 3, 4 (Make a selection for each transmitter in order, all approvals must be from one group)		
Hazardous area approvals Group A		
NH	Ordinary location (non-hazardous)	★
Hazardous area approvals Group B		
E5	US Approvals Explosion-proof and Dust Ignition-proof	★
I5	US Approvals Intrinsically Safe and Non-Incendive	★
IE[8]	US Approvals FISCO Intrinsically Safe and Non-Incendive	★
K5	US Approvals Explosion-proof, Dust Ignition-proof, Intrinsically Safe, and Non-Incendive	★
Hazardous area approvals Group C		
E6	US/Canadian Approvals Explosion-proof and Dust Ignition-proof	★
I6	US/Canadian Approvals Intrinsically Safe and Division 2	★
IF[8]	US/Canadian Approvals FISCO Intrinsically Safe and Division 2	★
K6	US/Canadian Approvals Explosion-proof, Dust Ignition-proof, Intrinsically Safe, and Division 2	★
KB	US/Canadian Approvals Explosion-proof, Dust Ignition-proof, Intrinsically Safe, and Division 2	★
Hazardous area approvals Group D		
E1	ATEX Flameproof	★
I1	ATEX Intrinsic Safety ia; Intrinsic Safety ic	★
IA[8]	ATEX FISCO Intrinsic Safety	★
N1	ATEX Type n	★
ND	ATEX Dust	★
K1	ATEX Flameproof; Intrinsic Safety; Type n; Dust	★
Hazardous area approvals Group E		
E7	IECEx Flameproof	★
I7	IECEx Intrinsic Safety	★
IG[8]	IECEx FISCO Intrinsic Safety	★
N7	IECEx Type n	★
NF	IECEx Dust	★
K7	IECEx Flameproof; Intrinsic Safety; Type n; Dust	★

Table 3: Requirements - select one from each available choice *(continued)*

Code	Description	
Hazardous area approvals Group F		
E2	INMETRO Flameproof	★
I2	INMETRO Intrinsic Safety	★
IB[8]	INMETRO FISCO Intrinsic Safety	★
K2	INMETRO Flameproof; Intrinsic Safety	★
Hazardous area approvals Group G		
E3	NEPSI Flameproof	★
I3	NEPSI Intrinsic Safety	★
N3	NEPSI Increased Safety - Ex ec	★
IH[8]	NEPSI FISCO/FNICO Intrinsic Safety	★
K3	NEPSI Flameproof, Intrinsic Safety, and Increased Safety - Ex ec	★
Hazardous area approvals Group H		
E4	Japan Flameproof	★
Hazardous area approvals Group I		
E8	Technical Regulations Customs Union (EAC) Flameproof and Dust	★
I8	Technical Regulations Customs Union (EAC) Intrinsic Safety and Dust	★
N8	Technical Regulations Customs Union (EAC) Type n and Dust	★
K8	Technical Regulations Customs Union (EAC) Flameproof; Intrinsic Safety; Type n and Dust	★
G8	Technical Regulations Customs Union (EAC) FISCO Intrinsic Safety and Dust	★
Hazardous area approvals Group J		
E9	KTL (Korea) Flameproof and Dust	★
Hazardous area approvals Group K		
EW	PESO (India) Flameproof	★
IW	PESO (India) Intrinsically Safe	★
KW	PESO (India) Flameproof, Intrinsically Safe	★

(1) *Only available with remote electronics.*
(2) *Available in Class 1500 in 6 inch and 8 inch meter body sizes and Class 900 in 10 inch through 12 inch meter body sizes.*
(3) *Available on meters from 2 inch through 8 inch (50–200 mm). Also available in 10 inch through 12 inch (250–300 mm) meters when using Super Duplex material of construction.*
(4) *Only available for meters from 2 inch through 8 inch (50–200 mm).*
(5) *See Table 10 and Table 14 for the specific sensor process temperature range. Meters that include the PD option code are compliant with the EU Pressure Equipment Directive, PED, 2014/68/EU and the UK Pressure Equipment (Safety) Regulation, PER, Statutory Instrument, SI No. 1105.*
(6) *No Japan (E4) approval.*
(7) *The Safety Certifications SI1, SI2, SI3, or SI4 option codes are not available with this option.*
(8) *Fieldbus Intrinsic Safe Concept (FISCO) available with output code F (FOUNDATION Fieldbus digital signal) only.*

Options

Select only as needed.

Table 4: Options

Code	Description	
Display type[1]		
M5	LCD indicator	★
Remote electronics[1]		
R10	Remote electronics with 10 ft. (3,0 m) cable	★
R20	Remote electronics with 20 ft. (6,1 m) cable	★
R30	Remote electronics with 30 ft. (9,1 m) cable	★
R33	Remote electronics with 33 ft. (10,1m) cable	★
R50	Remote electronics with 50 ft. (15,2 m) cable	★
R75	Remote electronics with 75 ft. (22,9 m) cable	★
Rxx	Remote Electronics with customer-specified cable length (xx ft., 1 ft. to 75 ft. cable in 1 ft. increments) Example: R15 = 15 ft., R34 = 34 ft.	
A10	Armored remote electronics with 10 ft. (3,0 m) cable	
A20	Armored remote electronics with 20 ft. (6,1 m) cable	
A33	Armored remote electronics with 33 ft. (10,1 m) cable	
A50	Armored remote electronics with 50 ft. (15,2 m) cable	
A75	Armored remote electronics with 75 ft. (22,9 m) cable	
Transient protection[1]		
T1	Transient Protection terminal block	
Alarm mode[1]		
C4[2]	NAMUR alarm and saturation values, high alarm	★
CN[2]	NAMUR alarm and saturation values, low alarm	★
Special cleaning		
P2	Special cleaning for oxygen service	★
Ground screw assembly[1]		
V5[3]	External ground screw assembly	★
Plantweb™ control functionality		
A01[4]	Basic Control: One Proportional/Integral/Derivative (PID) Function Block	★
ASME B31.1 code compliance[5]		
J2	ASME B31.1 General compliance	
J7	ASME B31.1 Boiler External Piping (BEP) code stamp	
Special inspections		
QC2	Visual and Dimensional, Quantity, Display and Configuration Inspection with Certificate	
HART communication[1]		
HR7[7]	HART Revision 7	★
Process diagnostics[1]		
DS3[6][7]	SMART Fluid Diagnostics	★
Safety certifications for Transmitter 1		
SI1[6]	Safety Certification of 4–20 mA Output per IEC 61508	★

Table 4: Options *(continued)*

Code	Description	
Safety certifications for Transmitter 2		
SI2[6]	Safety Certification of 4–20 mA Output per IEC 61508	★
Safety certifications for Transmitter 3		
SI3[6]	Safety Certification of 4–20 mA Output per IEC 61508	★
Safety certifications for Transmitter 4		
SI4[6]	Safety Certification of 4–20 mA Output per IEC 61508	★
Quality certificate		
Q4	Calibration Certificate per ISO 10474 3.1/EN 10204 3.1	★
Q5	Hydrostatic Test Certificate	★
Q8	Material Traceability per ISO 10474 3.1/EN 10204 3.1	★
QP	Calibration Certificate per ISO 10474 3.1/EN 10204 3.1 and Tamper Evident Seal	★
Q25	Certificate of Compliance to NACE MR0175 and MR0103	★
Q66	Weld Procedure Package (weld map, weld procedure specification, weld procedure qualification record, welder performance qualification)	★
Q70	NDE Weld Examination Inspection Certificate, ISO 10474 3.1; see Table 31	
Q71	NDE Weld Examination Inspection Certificate, ISO 10474 3.1 with images; see Table 31	
Q76	Positive Material Identification (PMI) on Flanges and Pipe (XRF), per ASTM E1476-97; see Table 32.	★
Q77	Positive Material Identification (PMI) with Carbon Content on Flange and Pipe (OES) per ASTM E1476-97; see Table 33.	★
Q80[8]	Ferrite Content Testing (FN 3 to 10)	★
Sensor completion		
WG	Witness General	
Pressure Equipment Directive (PED)		
PD	Pressure Equipment Directive (PED)	★
Critical process vortex[1]		
CPA	Critical Process Online Sensor Replacement Not available on: ■ Meters with Wetted Material option code D ■ 6 inch (150 mm) or larger meters with Wetted Material option code H	★
Quick Start Guide language (default is English)		
YF	French	★
YG	German	★
YI	Italian	★
YJ	Japanese	★
YK	Korean	★
YM	Chinese (Mandarin)	★
YP	Portuguese	★
YR	Russian	★
YS	Spanish	★

(1) *Option code will apply to all applicable transmitters.*
(2) *NAMUR compliant operation and the alarm latch options are preset at the factory and can be changed to standard operation in the field.*
(3) *Only available for ordinary location. The ground screw is included by default for all hazardous area approvals.*
(4) *Only applies to transmitters ordered with output code F.*
(5) *Requires Quality Certificate Q4, Q5, Q8, and NDE Welding Certificate Q70 or Q71.*
(6) *Not available with Outputs option codes F and M.*
(7) *The Safety Certifications S11, SI2, SI3, or SI4 option codes are not available with this option.*
(8) *Only available with Material code S.*

Product Specifications

Physical specifications

Rosemount vortex flow meters are designed to the standards defined in ASME B31.3. This standard is used as the basis for all of our other pressure vessel certifications, such as CRN and PED.

Process fluids

Liquid, **Gas**, and **Steam** applications. Fluids must be homogeneous and single-phase.

Flow calibration

Every Emerson Vortex flowmeter is water calibrated and given a unique calibration number called a reference K-factor. Emerson flow labs use traceable calibrations that reference internationally recognized standards such as NIST in the United States and Mexico, National Institute of Standards in China, and ISO 10725 in Europe.

Theoretical and experimental data have shown that the K-factor is independent of fluid density and viscosity, proving the K-factor is applicable in all types of fluid—liquid, gas and steam. The K-factor is a function of the shedder bar and meter geometry.

Line sizes and pipe schedules

Table 5: Line sizes by process connection type

Line size		Process connection type (✓ indicates availability)							
Inch	DIN	Flanged				Wafer	Weld-end	Threaded	
		Standard	Dual	Reducer	Quad			Standard	Reducer
0.5	15	✓	✓			✓	✓	✓	
1	25	✓	✓	✓		✓	✓	✓	✓
1.5	40	✓	✓	✓		✓	✓	✓	✓
2	50	✓	✓	✓	✓	✓	✓	✓	✓
3	80	✓	✓	✓	✓	✓	✓		
4	100	✓	✓	✓	✓	✓	✓		
6	150	✓	✓	✓	✓	✓	✓		
8	200	✓	✓	✓	✓	✓	✓		
10	250	✓	✓	✓	✓		✓		
12	300	✓	✓	✓	✓		✓		
14	350			✓					

Process pipe schedules

Meters will be shipped from the factory at the Schedule 40 default value unless otherwise specified. The value can be changed in the field if necessary.

For a weld-end style meter, see Table 9.

Pressure limits

Table 6: Flanged/Dual/Quad style meter

ASME 16.5	EN1092-1	JIS
Class 150	PN 10	10K
Class 300	PN 16	20K

Table 6: Flanged/Dual/Quad style meter *(continued)*

ASME 16.5	EN1092-1	JIS
Class 600	PN 25	40K
Class 900	PN 40	
Class 1500	PN 63	
	PN 100	
	PN 160	

Table 7: Reducer style meter

ASME 16.5	EN1092-1
Class 150	PN 10
Class 300	PN 16
Class 600	PN 25
Class 900	PN 40
Class 1500	PN 63
	PN 100
	PN 160

Table 8: Wafer style meter

ASME 16.5	EN1092-1	JIS
Class 150	PN 10	10K
Class 300	PN 16	20K
Class 600	PN 25	40K
	PN 40	
	PN 63	
	PN 100	

Table 9: Weld-end/Threaded-end style meter

	W1	W4	W8/T8	W9/T9
Mating pipe schedule:	Schedule 10	Schedule 40	Schedule 80	Schedule 160
Pressure rating for 1 inch to 4 inch sizes:	720 psig (4.96 MPa-g)	1,440 psig (9.93 MPa-g)	2,160 psig (14.9 MPa-g)	3,600 psig (24.8 MPa-g)
Pressure rating for 6 inch to 12 inch sizes:	N/A	720 psig (4.96 MPa-g)	1,440 psig (9.93 MPa-g)	2,160 psig (14.9 MPa-g)

Temperature limits

Table 10: Vortex Sensor process temperature range(1)

Standard Process Temperature: Option Code N		
Wetted material	**PED/PER(2)**	**NOT PED/PER**
S	-40 °F to +450 °F (-40 °C to +232 °C)	
H	-40 °F to +450 °F (-40 °C to +232 °C)	
C	+32 °F to +450 °F (0 °C to +232 °C)	-20 °F to +450 °F (-29 °C to +232 °C)

Table 10: Vortex Sensor process temperature range[1] *(continued)*

Standard Process Temperature: Option Code N		
L	-40 °F to +450 °F (-40 °C to +232 °C)	
D	-40 °F to +450 °F (-40 °C to +232 °C)	
Extended Process Temperature: Option Code E		
Wetted material	**PED/PER[2]**	**NOT PED/PER**
S	-320 °F to +800 °F (-196 °C to +427 °C)	
H	-157 °F to +800 °F (-105 °C to +427 °C)	-325 °F to +800 °F (-198 °C to +427 °C)
C	+32 °F to +800 °F (0 °C to +427 °C)	-20 °F to +800 °F (-29 °C to +427 °C)
L	-50 °F to +800 °F (-46 °C to +427 °C)	
D	-58 °F to +600 °F (-50 °C to +315 °C)	-60 °F to +600 °F (-51 °C to +315 °C)
Severe Service: Option Code S		
Wetted material	**PED/PER[2]**	**NOT PED/PER**
S	-320 °F to +842 °F (-196 °C to +450 °C)	
H	-157 °F to +800 °F (-105 °C to +427 °C)	-330 °F to +800 °F (-201 °C to +427 °C)
C	+32 °F to +800 °F (0 °C to +427 °C)	-20 °F to +800 °F (-29 °C to +427 °C)
L	-50 °F to +800 °F (-46 °C to +427 °C)	
D	-58 °F to +600 °F (-50 °C to +315 °C)	-60 °F to +600 °F (-51 °C to +315 °C)

(1) *Ambient and process temperature limits maybe be modified by the hazardous area rating. Please refer to Table 14 and to Rosemount 8800D Approval Document (00825-VA00-0001).*

(2) *Meters that include the PD option code are compliant with the EU Pressure Equipment Directive, PED, 2014/68/EU and the UK Pressure Equipment (Safety) Regulation, PER, 2016 Statutory Instrument, SI No. 1105.*

Table 11: Temperature sensor temperature limits

Temperature sensor	Temperature limit
Type N thermocouple	–40 °F to +842 °F (–40 °C to +450 °C)[1]

(1) *Meets ASTM E230/E230M-17 Special Tolerance Standard.*

Table 12: Electronics temperature limits (remotely-mounted transmitter)

Ambient operating temperature range[1]	–58 °F to +185 °F (–50 °C to +85 °C)
Ambient operating temperature range with LCD—Local Indicator[1][2]	–40 °F to +185 °F (–40 °C to +85 °C)
Storage temperature range	–58 °F to +250 °F (–50 °C to +121 °C)
Storage temperature range with LCD	–50 °F to +185 °F (–46 °C to +85 °C)

(1) *Ambient operating temperature limits maybe be modified by the hazardous area rating. Please refer to Rosemount 8800D Approval Document (00825-VA00-0001).*

(2) *LCD contrast may be affected below –4 °F (–20 °C).*

Table 13: Electronics temperature limits (integrally-mounted transmitter)

Operating and storage temperature range, with and without LCD	Same as remotely-mounted transmitter. See Table 12. However, high process temperature lowers the maximum allowable ambient temperature. See Figure 3.

Table 13: Electronics temperature limits (integrally-mounted transmitter) *(continued)*

Maximum process temperature[1]	Interdependent with ambient temperature. Figure 3 indicates the combined ambient and process temperature limits under which the electronics temperature can be maintained below the maximum +185 °F (+85 °C). **Note** The indicated limit is with the integral transmitter directly above a horizontal pipe, and the pipe insulated with three inches of ceramic fiber. Other configurations may affect the actual electronics temperature. **Figure 3: Maximum ambient/process temperature limit** 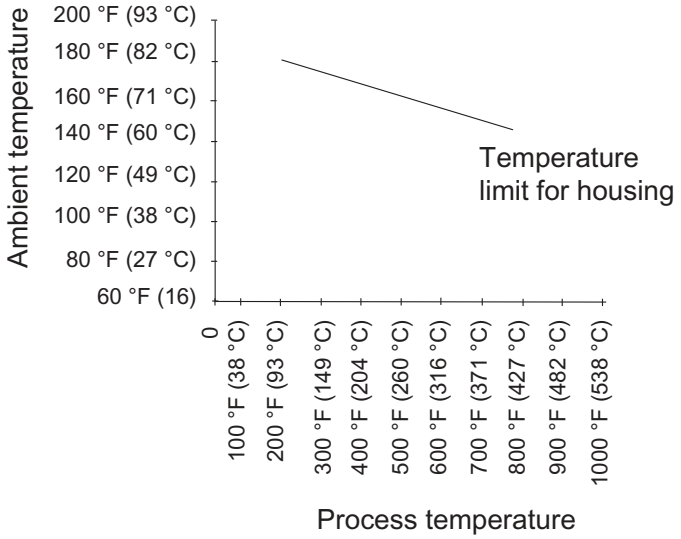

(1) *Ambient operating temperature limits maybe be modified by the hazardous area rating. Please refer to Rosemount 8800D Approval Document (00825-VA00-0001).*

Table 14: Sensor hazardous location process temperature limits[1]

Ambient temperature	Process temperature	T-Class Sensor
-58 °F to +158 °F (-50 °C to +70 °C)[1]	-328 °F to +167 °F (-200 °C to +75 °C)	T6
-58 °F to +158 °F (-50 °C to +70 °C)[1]	-328 °F to +203 °F (-200 °C to +95 °C)	T5
-58 °F to +158 °F (-50 °C to +70 °C)[1]	-328 °F to +266 °F (-200 °C to +130 °C)	T4
-58 °F to +158 °F (-50 °C to +70 °C)[1]	-328 °F to +383 °F (-200 °C to +195 °C)	T3
-58 °F to +158 °F (-50 °C to +70 °C)[1]	-328 °F to +554 °F (-200 °C to +290 °C)	T2
-58 °F to +158 °F (-50 °C to +70 °C)[1]	-328 °F to +842 °F (-200 °C to +450 °C)[2]	T1

(1) *Temperatures noted only apply to Flameproof, Ex d, models. Please refer to Rosemount 8800D Approval Document (00825-VA00-0001) for the specific temperature limits for each hazardous area approval code.*

(2) *The user is responsible for ensuring the surface temperature does not exceed 842 °F (450 °C) in their specific installation.*

EMI/RFI effect

- Meets EMC requirements to Directive 2014/30/EU.
- Output error less than ±0.025% of span with twisted pair from 80–1000 MHz for radiated field strength of 10 V/m.
- 1.4–2.0 GHz for radiated field strength of 3 V/m.
- 2.0–2.7 GHz for radiated field strength of 1 V/m.
- No affect on the values that are being given if using HART® digital signal.
- Tested per EN61326.

Humidity limits

Operates in 0–95% relative humidity under noncondensing conditions (tested to IEC 60770, Section 6.2.11).

Table 15: Transmitter housing (enclosure) physical details

Enclosure rating	CSA Type 4X; IP66
Conduit entry	½–14 NPT or M20 x 1.5 threads
Paint	Polyurethane
Cover O-rings	Buna -N

Remote transmitter mounting hardware and cables

- Mounting hardware is provided.
- The transmitter and meter body are interconnected by a standard or armored signal cable assembly.
  - Cable length is specified when ordered (see Ordering Information - Single/Dual transmitter or Ordering information – Quad transmitter), and it cannot be altered in the field.
  - Standard cable is non-armored and is intended to be run through rigid metal conduit.
  - Armored cable includes glands/adapters to connect the cable to the meter body and transmitter.
  - Both types of cable are flame-resistant in accordance with IEC 60322-3.

Tagging

- Standard tags are stainless steel.
- The standard tag is permanently attached to the flowmeter.
- Character height is 1/16 inch (1,6 mm).
- A wire-on tag is available on request.
- Character height on the wire-on tag is 0.236 inch (6 mm).
- Wire-on tags can contain five lines with an average of 19 characters per line at standard character height.

Materials of construction

Wetted components

Table 16: Wetted materials by component

Wetted material code	Meter body	Flanges
S	CF–3M cast stainless steel	316/ 316 L stainless steel
H	CW2M cast nickel alloy(1)	N06022 nickel alloy(2)
C	WBB/LCC cast carbon steel	A105 forged carbon steel
L	WBB/LCC cast carbon steel	LF2 forged carbon steel
D	6A duplex stainless steel	UNS S32760 wrought duplex stainless steel

(1) *8800DF120, 8800DD120, 8800DQ120, and 8800DR140 are made of N06022 wrought nickel alloy.*
(2) *See Table 18 for nickel alloy flange design (collar/ lap flange or weldneck).*

Table 17: Flange Design for 8800DF/ 8800DD with wetted material code "H"

8800DF/ 8800DD	Flange rating code								
Line size in. (mm)	**A1**	**A3**	**A6**	**A7**	**K1**	**K3**	**K4**	**K6**	**K7**
½ (15)	Collar	Collar	Collar	WN	WN	WN	NA	WN	WN
1 (25)	Collar	Collar	Collar	WN	WN	WN	NA	WN	WN
1½ (40)	Collar	Collar	Collar	WN	WN	WN	NA	WN	WN
2 (50)	Collar	Collar	Collar	WN	Collar	Collar	WN	WN	WN
3 (80)	Collar	Collar	Collar	WN	Collar	Collar	WN	WN	WN
4 (100)	Collar	Collar	Collar	WN	Collar	Collar	WN	WN	WN
6 (150)	Collar	Collar	Collar	WN	WN	WN	WN	WN	WN
8 (200)	Collar	Collar	Collar	WN	WN	WN	WN	WN	WN
10 (250)	WN	WN	WN	NA	WN	WN	WN	WN	NA
12 (300)	WN	WN	WN	NA	WN	WN	WN	WN	NA
14 (350) Reducer only	WN	WN	NA	NA	NA	NA	NA	NA	NA

Collar Nickel alloy collar and 316 SST lap flange (Table 18). If weld neck flange is required, contact an Emerson Flow representative.

WN Nickel alloy weld neck flange (Table 18).

NA Not Available.

Note
All 8800DR and 8800DQ models with nickel alloy materials of construction use weld neck flanges. Also any flange codes not listed above use weld neck flanges.

Table 18: Flange design illustrations

Nickel alloy collar and 316 SST lap flange	Nickel alloy weld neck flange
	

Non-wetted components

Table 19: Non-wetted materials by component

Sensor	"N" and "E" SST; "S" Monel/Inconel
Lap Flange	316/316L
Thermocouple	Type N; 304 SST
Armor cable jacket	304 SST
Transmitter support tube	316 SST
Transmitter housing	Aluminum; 316 SST

Table 19: Non-wetted materials by component *(continued)*

Remote mount bracket	304 SST

Surface finish

- Standard surface facing finish meets the requirements of the applicable flange standard.
- Optional smooth facing finish (flange option codes Cx) is 63 to 125 µ inches (1.6 to 3.1 µ meters) Ra roughness.

NACE compliance

- Materials of Construction meet NACE material recommendations per MR0175 / ISO15156 for use in H_2S containing environments in oil field production.
- Materials of Construction also meet NACE recommendations per MR0103-2003 for corrosive petroleum refining environments.
- MR0175/MR0103 compliance requires Q25 option in model code.

Armored cable glands

The cable gland material will match the material of construction of the mating parts at both the meter body end and transmitter end. The cable gland that connects to the meter body will utilize a stainless steel gland and the cable gland material at the electronics end will be either aluminum or stainless steel depending on the material of the electronics housing that is ordered.

Performance specifications

The following performance specifications are for all Rosemount models except where noted. Digital performance specifications applicable to both Digital HART® and FOUNDATION™ Fieldbus output. Unless stated otherwise, all accuracy specifications include linearity, hysteresis, and repeatability.

Maximum accurate meter velocity

Table 20: Maximum accurate meter velocity

Model	Fluid state	Line size	Velocity
8800DF/DW/DR/DD/DQ	Liquid	All	25 ft/s (7.62 m/s)
8800DF/DW	Gas/Steam	½ inch and 1 inch (DN 15 and DN 25)	220 ft/s (67.06 m/s)
		1½ inch (DN 40) and greater	250 ft/s (76.2 m/s)
8800DR	Gas/Steam	1 inch and 1½ inch (DN 25 and DN 40)	220 ft/s (67.06 m/s)
		2 inch (DN 50) and greater	250 ft/sec (76.2 m/s)
8800DD(1)	Gas/Steam	4 inch (DN 100) and smaller (Dual bar design)	100 ft/s (30.5 m/s)
		6 inch (DN 150) and greater (Single bar design)	250 ft/s (76.2 m/s)
8800DQ	Gas/Steam	All	100 ft/s (30.5 m/s)

(1) *8800DD single bar design is available for lines sizes 2 inch (DN50) through 4 inch (DN 100) via ETO.*

Volume flow accuracy

Table 21: Volume flow accuracy

Process fluid	Digital and pulse output
Liquids with Reynolds number over 20,000	±0.65% of rate(1)(2)
Gas and steam with Reynolds number over 15,000	±1.0% of rate(3)(2)

Table 21: Volume flow accuracy *(continued)*

Process fluid	Digital and pulse output
For all process fluids from stated limit to a Reynolds number of 10,000	From process limit specification to ±2% linear increase
For Reynolds numbers less than 10,000 to 5,000	±2% to ±6%, linear

(1) *6 inch to 12 inch reducer (150 mm to 300 mm) ±1.0% of rate.*
(2) *Analog ±0.025% of span*
(3) *6 inch to 12 inch reducer (150 mm to 300 mm): ±1.35% of rate.*

Volume flow repeatability

±0.1 percent of actual flow rate.

Stability

±0.1% of rate over one year

Process temperature accuracy

Table 22: Process temperature accuracy by installation type

Installation type	Process temperature accuracy
Integral mount	2.2 °F (1.2 °C) or 0.4% of reading, whichever is greater
Remote mount	Add ±0.018 °F/ft (±0.03 °C/m) of uncertainty to measurement

Temperature sensor accuracy meets ASTM E230/E230M-17 Special Tolerance Standard.

Mass flow accuracy

Table 23: Mass flow accuracy by process fluid type

Process fluid type	MV option code	Compensation type	Accuracy 8800DF 8800DR < 6"	Accuracy 8800DR 6" ≥
Steam	MTA or MCA	Temperature compensation(1)	±2.0% of rate (typical)	±2.20% of rate (typical)
	MPA and MCA	Pressure compensation(1)(2)(3)	±1.3% of rate at 30 psia through 2,000 psia	±1.59% of rate at 30 psia through 2,000 psia
	MCA	Pressure and Temperature Compensation(1)(2)(3)	±1.2% of rate at 150 psia ±1.3% of rate at 300 psia ±1.6% of rate at 800 psia ±2.5% of rate at 2,000 psia	±1.50% of rate at 150 psia ±1.59% of rate at 300 psia ±1.84% of rate at 800 psia ±2.66% of rate at 2,000 psia
Liquid (water)	MTA and MCA	Temperature Compensation	±0.70% of rate up to 500 °F (260 °C)(4)	±1.03% of rate up to 500 °F (260 °C)(5)
Liquid (user-defined)	MTA and MCA	Temperature Compensation	Dependent on user input	Dependent on user input

(1) *Temperature range +176 °F to +842 °F (+80 °C to + 450 °C)*
(2) *Pressure measurement accuracy is ±0.1% of span.*
(3) *Consult factory accuracy for < 30 psia and > 2,000 psia.*
(4) *±0.85% of rate between +500 °F to +600 °F (+260 °C to +316 °C)*
(5) *±1.14% of rate between +500 °F to +600 °F (+260 °C to +316 °C)*

Process temperature effect on K-factor

The compensated K-factor is based on the reference K-factor as compensated for the given fixed process temperature and wetted materials. Compensated K-factor is calculated by the electronics.

The percentage change in K-factor for all materials is no greater than ±0.3 per 100 °F (56 °C).

Table 24: Ambient temperature effect

Output type	Ambient temperature effect
Digital and pulse output	No effect
Analog output	±0.1% of span from –58 °F to 185 °F (–50 to 85 °C)

Measurable flow rates

Capable of processing signals from flow applications which meet the Reynolds number and velocity limitations listed in Table 25, Table 26, and Table 27.

Table 25: Minimum measurable meter Reynolds numbers

Meter sizes	Reynolds number limitations
½ – 4 inch (DN 15 – DN100)	5000 minimum
6 – 12 inch (DN150 – DN300)	

Table 26: Theoretical minimum measurable meter velocities

Process	Feet per second(1)	Meters per second(1)
Liquids(2)	$\sqrt{36/\rho}$	$\sqrt{54/\rho}$
Gases(2)	$\sqrt{36/\rho}$	$\sqrt{54/\rho}$
ρ is the process fluid density at flowing conditions in lb/ft³ for ft/s and kg/m³ for m/s.		

(1) *Referenced to schedule 40 pipe.*
(2) *The theoretical minimum measurable meter velocity is based on ideal process conditions. It does not take in to account process viscosity, pipe vibration, installation effects, operating environment, or any other conditions that may contribute to the meter operating at other than the theoretical minimum. Best practice is to size a Vortex meter where the expected actual minimum flow is greater than the theoretical minimum measurable flow. The practical measurement limit is generally 0.7 ft/s (0.2 m/s) for liquid and 6.5 ft/s (2 m/s) for gas and steam in most applications.*

Table 27: Maximum measurable meter velocities (use the smaller of the two values)

Process	Feet per second(1)		Meters per second(1)	
Liquids	$\sqrt{90{,}000/\rho}$	or 30	$\sqrt{134{,}000/\rho}$	or 9.14
Gases(2)	$\sqrt{90{,}000/\rho}$	or 300	$\sqrt{134{,}000/\rho}$	or 91.4
ρ is the process fluid density at flowing conditions in lb/ft³ for ft/s and kg/m³ for m/s.				

(1) *Referenced to schedule 40 pipe.*
(2) *Accuracy limitations for gas and steam for dual-style meters (½ to 4 inch): max velocity of 100 ft/s (30.5 m/s).*

Note
Sizing calculations are required to select the proper flow meter size. These calculations provide pressure loss, accuracy, minimum and maximum flow rate data to guide in proper selection. Vortex sizing software can be found using the Sizing & Selection Tool. The Sizing & Selection Tool can be accessed online or downloaded for offline use using this link:

www.Emerson.com/FlowSizing

Permanent pressure loss

The approximate permanent pressure loss (PPL) from the flowmeter is calculated for each application in the Vortex sizing software. Go to the Rosemount 8800D Product Page, and select **Size** for detailed sizing on most applications, or complete a Configuration Data Sheet and contact an Emerson Flow representative.

The PPL is determined using the equation:

$$\mathrm{PPL} = \frac{A \times \rho_f \times Q^2}{D^4}$$

PPL Permanent pressure loss (psi or kPa)

ρ_f Density at operating conditions (lb/ft^3 or kg/m^3)

Q Actual volumetric flow rate (Gas = ft^3/min or m^3/hr; Liquid = gal/min or l/min)

D Flowmeter bore diameter (in. or mm)

A Constant depending on meter style, fluid type, and flow units. Determined per:

Meter style	English units		SI units	
	A_{liquid}	A_{gas}	A_{liquid}	A_{gas}
8800DF/W	3.4×10^{-5}	1.9×10^{-3}	0.425	118
8800DR	3.91×10^{-5}	2.19×10^{-3}	0.489	136
8800DD	6.12×10^{-5}	3.42×10^{-3}	0.765	212
8800DQ	6.12×10^{-5}	3.42×10^{-3}	0.765	212

Minimum upstream pressure (liquids)

Flow metering conditions that would allow cavitation, the release of vapor from a liquid, should be avoided. This flow condition can be avoided by remaining within the proper flow range of the meter and by following appropriate system design.

For some liquid applications, incorporation of a back pressure valve should be considered. To prevent cavitation, the minimum upstream pressure should be the smaller result of these two equations:

- $2.9 \times \Delta P + 1.3 \times p_v$
- $2.9 \times \Delta P + p_v + 0.5$ psia (3.45 kPa)

Where:

P Line pressure five pipe diameters downstream of the meter (psia or kPa abs)

ΔP Pressure loss across the meter (psi or kPa)

p_v Liquid vapor pressure at operating conditions (psia or kPa abs)

Vibration effect

High vibration may cause a false flow measurement when there is no flow. The meter design will minimize this effect, and the factory settings for signal processing are selected to eliminate these errors for most applications. If an output error at zero flow is still detected, it can be eliminated by adjusting the low flow cutoff, trigger level, or low-pass filter. As the process begins to flow through the meter, most vibration effects are quickly overcome by the flow signal.

Vibration specifications

- Integral aluminum housings, remote aluminum housings, and remote SST housings: At or near the minimum liquid flow rate in a normal pipe mounted installation, the maximum vibration should be 0.087 inch (2,21 mm) double amplitude displacement or 1 g acceleration, whichever is smaller. At or near the minimum gas flow rate in a normal pipe mounted installation, the maximum vibration should be 0.043 inch (1,09 mm) double amplitude displacement or ½ g acceleration, whichever is smaller.
- Integral SST housing: At or near the minimum liquid flow rate in a normal pipe mounted installation, the maximum vibration should be 0.044 inch (1,11 mm) double amplitude displacement or ⅓ g acceleration, whichever is smaller. At or near the minimum gas flow rate in a normal pipe mounted installation, the maximum vibration should be 0.022 inch (0,55 mm) double amplitude displacement or ⅙ g acceleration, whichever is smaller.

Mounting position effect

Meter will meet accuracy specifications when mounted in horizontal, vertical, or inclined pipelines. Best practice for mounting in a horizontal pipe is to orient the shedder bar in the horizontal plane. This will prevent solids in liquid applications and liquid in gas/steam applications from disrupting the shedding frequency.

Pipe length requirements

Rated accuracy is based on the number of pipe diameters from an upstream disturbance. No K-factor correction is required if the meter is installed with 35D upstream and 5D downstream. The value of the K-factor may shift up to 0.5% when the upstream straight pipe length is reduced down to the minimum recommended 10D. Refer to the Rosemount 8800 Vortex Installation Effects Technical Data Sheet for detailed information on K-factor correction.

Flow calibration information

Flowmeter calibration and configuration information is provided with every flowmeter. For a certified copy of flow calibration data, the Q4 option code must be ordered in the model number.

Transient protection

The optional transient terminal block prevents damage to the flowmeter from transients induced by lightning, welding, heavy electrical equipment, or switch gears. The transient protection electronics are located in the terminal block.

The transient terminal block meets the following specifications:

- IEEE C62.41 - 2002 Category B
- 3 kA crest (8 × 20 ms)
- 6 kV crest (1.2 × 50 ms)
- 6 kV/0.5 kA (0.5 ms, 100 kHz, ring wave)

HART® specifications

Output signals

Digital HART signal	Bell 202 superimposed on 4–20 mA signal
Optional scalable pulse output	0 to 10000 Hz; transistor switch closure with adjustable scaling via HART communications; capable of switching from 5 to 30 Vdc, 120 mA maximum

Analog output adjustment

Engineering units and lower and upper range values are user-selected. Output is automatically scaled to provide 4 mA at the selected lower range value, 20 mA at the selected upper range value. No frequency input is required to adjust the range values.

Scalable frequency adjustment

The scalable pulse output can be set to a specific velocity, volume, or mass (i.e. 1 pulse = 1 lb). The scalable pulse output can also be scaled to a specific rate of volume, mass, or velocity (i.e. 100 Hz = 500 lb/hr).

Analog 4–20 mA Power supply

External power supply required. Each transmitter operates on 10.8 Vdc to 42 Vdc terminal voltage. See Figure 4.

Power consumption

One watt maximum per transmitter.

HART communication

Figure 4: HART communication voltage/resistance requirement

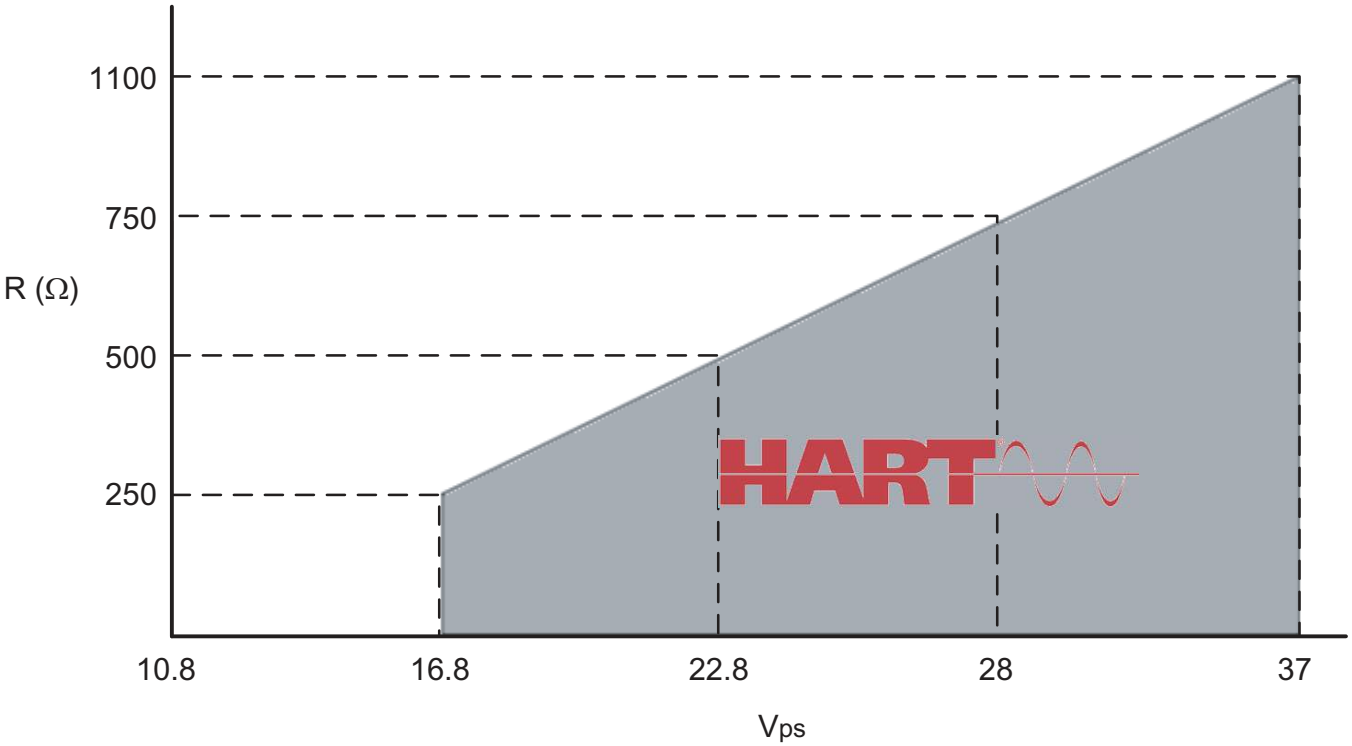

Maximum loop resistance is determined by the voltage level of the external power supply, as described in the graph.

Note that HART Communication requires a minimum loop resistance of 250 ohms up to a maximum of 1100 ohms.

R(Ω) Load resistor value.

V_{ps} Minimum power supply voltage required

$R(\Omega)max = 41.7 (V_{ps} - 10.8 V)$.

Failure mode alarm levels

If transmitter self-diagnostics detect a fault condition, the analog signal will be driven to the values in Table 28.

Table 28: mA outputs for low and high alarm

Alarm jumper position	mA output by Alarm Type setting(1)	
	Rosemount standard	NAMUR-compliant
Low	3.75	3.60
Hi	21.75	22.6

(1) *The Alarm and Saturation Type settings can be pre-configured at the factory (Options C4 and CN for NAMUR-compliance) or user-configured.*

Saturation output values

When the operating flow is outside the range points, the analog output continues to track the operating flow until reaching the saturation values in Table 29. The output does not exceed the listed saturation value regardless of the operating flow.

Table 29: mA output saturation values

	mA output saturation value by type(1)	
	Rosemount standard	**NAMUR-Compliant**
Low	3.9	3.8
Hi	20.8	20.5

(1) *The Alarm and Saturation Type settings can be pre-configured at the factory (Options C4 and CN for NAMUR-compliance) or user-specified.*

Damping

Flow Damping adjustable between 0.2 and 255 seconds.

Process temperature damping adjustable between 0.4 and 32.0 seconds (MTA/MCA Option only).

Response time

Three vortex shedding cycles or 300 ms, whichever is greater, maximum required to reach 63.2% of actual input with the minimum damping (0.2 seconds).

Turn-on time

Less than six seconds plus the response time to rated accuracy from power up (less than eight seconds with the MTA/MCA Option).

Security lockout

When the security lockout jumper is enabled, the electronics will not allow you to modify parameters that affect flowmeter output.

Output testing

Analog output Flow meter may be commanded to set the analog output to a specified value between 3.6 mA and 22.6 mA.

Pulse output Flow meter may be commanded to set the pulse output frequency to a specified value between 0 Hz and 10000 Hz.

Low flow cutoff

Optimized at the factory per the user's process conditions per Rosemount 8800D Configuration Data Sheet (00806-0100-4004) and typically requires no adjustment. In certain cases, if required, it can be further adjusted after installation. Below selected value, output is driven to 4 mA and zero pulse output frequency.

Overrange capability

Analog signal output continues to 105 percent of span for Standard limits (or 103.1% for NAMUR), then remains constant with increasing flow. The digital and pulse outputs will continue to indicate flow up to the upper sensor limit of the flowmeter and a maximum pulse output frequency of 10400 Hz.

Magnetic-field interference

- Output error less than ±0.025% of span at 30 A/m (rms).
- Tested per EN 61326.

Note
During a surge event, devices with 4–20 mA (Outputs option codes D and P) or Modbus output (Output option code M) may exceed maximum EMC deviation limit or reset; however, device will self-recover and return to normal operation within specified start-up time.

Series mode noise rejection

Output error less than ±0.025% of span at 1 V rms, 60 Hz.

Common mode noise rejection

Output error less than ±0.025% of span at 30 V rms, 60 Hz.

Power supply effect

Less than 0.005% of span per volt

Transmitter electrical connections

Model	Terminal type
Analog 4–20 mA/HART	Compression screw terminal permanently fixed to the terminal block.
Analog 4–20 mA/HART + Pulse	

Field Communicator connections

Communication and test terminals	
All models	Clip connections permanently fixed to the terminal block.

The transmitter test function permits testing the loop output current without disconnecting the loop power.

FOUNDATION™ Fieldbus specifications

Transducer block

The transducer block calculates flow from sensor frequency. The calculation includes information about damping, shedding frequency, K-factor, process fluid, pipe ID, and diagnostics.

Resource block

The resource block contains physical transmitter information, including available memory, manufacturer identification, device type, software tag, and unique identification.

Backup Link Active Scheduler (LAS)

The transmitter is classified as a device link master. A device link master can function as an LAS if the current link master device fails or is removed from the segment.

The host or other configuration tool is used to download the schedule for the application to the link master device. In the absence of a primary link master, the transmitter will claim the LAS and provide permanent control for the H1 segment.

Diagnostics

The transmitter automatically performs continuous self-diagnostics. The user can perform on-line testing of the transmitter digital signal. Advanced simulation diagnostics are available. This enables remote verification of the electronics via a flow signal generator built into the electronics. The sensor strength value can be used to view the process flow signal and provide information regarding filter settings.

FOUNDATION Fieldbus function blocks

Analog input

The AI function block processes the measurement and makes it available to other function blocks. The AI function block also allows filtering, alarming, and engineering unit changes.

The Rosemount 8800D Flowmeter with Foundation Fieldbus comes with five AI function blocks. Two of the AI function blocks, flow and signal strength, come as standard. Three additional AI function blocks are available when the MTA option is selected: electronics temperature, process temperature, and process density. Note that process density is only available when the process fluid is configured as temperature compensated saturated steam, shown as TComp Sat Steam in the device.

Proportional/ Integral/ Derivative	The optional PID function block provides a sophisticated implementation of the universal PID algorithm. The PID function block features input for feed forward control, alarms on the process variable, and control deviation. The PID type (series or Instrument Society of America [ISA]) is user-selectable on the derivative filter.
Integrator	The standard integrator block is available for totalization of flow.
Arithmetic	The standard arithmetic block is available for various computations.

Output signal

Completely digital output with FOUNDATION Fieldbus communication (ITK 6.0 compliant).

Power supply

External power supply required. Flowmeter operates on 9 to 32 Vdc, 18 mA maximum.

Power consumption

600 mW maximum

Failure mode alarm

The AI block allows the user to configure the alarm to HI-HI, HI, LO, or LO-LO with a variety of priority levels.

Damping

Flow Damping adjustable between 0.2 and 255 seconds.

Process temperature damping adjustable between 0.4 and 32.0 seconds (MTA Option only).

Response time

Three vortex shedding cycles or 300 ms, whichever is greater, maximum required to reach 63.2% of actual input with the minimum damping (0.2 seconds).

Turn-on time

Performance within specifications no greater than 10.0 seconds after power is applied.

Overrange capability

- For liquid process fluid type, the transducer block digital output will continue to a nominal value of 25 ft/s. After that, the status associated with the transducer block output will go to UNCERTAIN. Above a nominal value of 30 ft/s, the status will go to BAD.
- For gas/steam service, the transducer block digital output will continue to a nominal value of 220 ft/s for 0.5 and 1.0-in. line sizes and a nominal value of 250 ft/s for 1.5–12-in. line sizes. After that, the status associated with the transducer block output will go to UNCERTAIN. Above a nominal value of 300 ft/s for all line sizes, the status will go to BAD.

Status

If self-diagnostics detect a transmitter failure, the status of the measurement will inform the control system. Status may also set the PID output to a safe value.

Schedule entries

Six (6)

Links

Twelve (12)

Virtual Communications Relationships (VCRs)

- Maximum VCRs: 20
- Number of Permanent Entries: 1

Table 30: Block Information

Block	Base index	Execution time (milliseconds)
Resource (RB)	1000	N/A
Transducer (TB)	1200	N/A
Analog Input 1 (AI 1)	1400	15
Analog Input 2 (AI 2)	1600	15
Proportional/ Integral/ Derivative (PID)	1800	20
Integrator (INTEG)	2000	25
Arithmetic (ARITH)	2200	20
Analog Input 3 (AI 3)	2400	15
Analog Input 4 (AI 4)	2600	15
Analog Input 5 (AI 5)	2800	15

Magnetic-field interference

- No effect on digital output accuracy at 30 A/m (rms).
- Tested per EN 61326.

Series mode noise rejection

No effect on digital output accuracy at 1 V rms, 60 Hz.

Common mode noise rejection

No effect on digital output accuracy at 250 V rms, 60 Hz.

Power supply effect

No effect on accuracy.

Electrical connections

Model	Power terminals
FOUNDATION fieldbus	Compression screw terminal permanently fixed to the terminal block.

Modbus® RS-485 specifications

Modbus output is provided by a HART® to Modbus output conversion.

Output signals

The Rosemount 8800 communicates via Modbus (RS-485) providing device status and 4 dynamic variables. Communication uses 1 start bit and 8 data bits. Baud rates supported are 1200, 2400, 4800, 9600, 19200, and 38400. One or two stop bits, and either none, odd, or even parity are available. All byte orders are supported.

Configuration

Configuration is only available through the HART communication port. No configuration is performed through Modbus.

Alarm handling

The output from the Modbus transmitter in case of an error (such as a field device malfunction) can be configured. The values for Modbus registers corresponding to PV, SV, TV, and QV will be changed accordingly (applicable registers in area 1300, 2000, 2100, and 2200).

Power supply

External power supply required. Each transmitter operates on 10 Vdc to 30 Vdc terminal voltage.

Scalable pulse output (for temporary testing only)

0 to 10000 Hz; transistor switch closure with adjustable scaling via HART communications; capable of switching from 5 to 30 Vdc, 120 mA maximum. The scalable pulse output can be set to a specific velocity, volume, or mass (i.e. 1 pulse = 1 lb). The scalable pulse output can also be scaled to a specific rate of volume, mass, or velocity (i.e. 100 Hz = 500 lb/hr).

LCD indicator functional specifications

Optional LCD indicator

The 11-digit, two-decimal, two-line integral optional LCD display can be configured to alternate between selected display options, which differ depending upon the output type selected.

Figure 5: Examples



When more than one item is selected, the display will scroll through all items selected. In the event of a fault, the display shows the applicable fault code.

Indicator options for models with HART® or Modbus® protocol:

- Primary Variable
- Velocity Flow
- Volumetric Flow
- Corrected Volumetric Flow
- Mass Flow
- Signal Strength
- Percent of Range
- Analog Output
- Totalizer
- Shedding Frequency
- Pulse Output Frequency
- Electronics Temperature
- Process Temperature (MTA/MCA only)
- Process Pressure (MPA/MCA only)
- Calculated Process Density (MTA/MCA/MPA only)
- Elapsed Time Meter (ETM)

Indicator options for models with FOUNDATION™ fieldbus protocol

- Primary Variable
- Percent of Range
- Shedding Frequency
- Electronics Temperature (MTA only)
- Process Temperature (MTA only)
- Calculated Process Density (MTA only)
- Totalizer (via Integrator block)

Quality certificate details

Table 31: Weld examination certifications for Q70, Q71

			Helium report	Dye pen report	Radio-graphic report	CD of images
8800DF/8800DD/8800DQ Form Q70, Inspection Certificate Weld Examination, ISO 10747.3.1						
	0.5 inch	15 mm	✔		✔	
	1–4 inch	25–100 mm			✔	
	6–12 inch	150–300 mm		✔	✔	
8800DF/8800DD/8800DQ Form Q71, Inspection Certificate Weld Examination, ISO 10747.3.1						
	0.5 inch	15 mm	✔		✔	✔
	1–4 inch	25–100 mm			✔	✔
	6–12 inch	150–300 mm		✔	✔	✔
8800DR Form Q70, Inspection Certificate Weld Examination, ISO 10747.3.1						
	1 inch	25 mm	✔		✔	
	1.5–6 inch	40–150 mm			✔	
	8–12 inch	200–300 mm		✔	✔	
8800DR Form Q71, Inspection Certificate Weld Examination, ISO 10747.3.1						
	1 inch	25 mm	✔		✔	✔
	1.5–6 inch	40–150 mm			✔	✔
	8–12 inch	200–300 mm		✔	✔	✔
8800DW Form Q70, Inspection Certificate Weld Examination, ISO 10747.3.1						
	0.5 inch	15 mm	✔			
	6–8 inch	150–200 mm		✔		
8800DW Form Q71, Inspection Certificate Weld Examination, ISO 10747.3.1						
	0.5 inch	15 mm	✔			
	6–8 inch	150–200 mm		✔		

Table 32: PMI Code Q76 for X-Ray Fluorescent Spectrometry (XFR)

Alloy	Elements to be identified
316L Stainless Steel	Cr (Chromium), Ni (Nickel), Mo (Molybdenum)
NiB (Nickel based) Alloys	Cr (Chromium), Ni (Nickel), Mo (Molybdenum)
25Cr Super Duplex	Cr (Chromium), Ni (Nickel), Mo (Molybdenum)

Table 33: PMI Code Q77 for Optical Emission Spark Spectrometry (OES)

Alloy	Elements to be identified
316L Stainless Steel	Cr (Chromium), Ni (Nickel), Mo (Molybdenum), C (Carbon)
Carbon Steel	Cr (Chromium), Ni (Nickel), Mo (Molybdenum), C (Carbon)

Typical flow velocities and rates

This section provides typical flow ranges for some common process fluids with default filter settings. Consult an Emerson representative to obtain a computer sizing program that describes in greater detail the flow range for an application.

Table 34 is a reference of pipe velocities that can be measured for the standard Rosemount 8800D and the reducer Rosemount 8800DR Vortex Meters. It does not consider density limitations, as described in Table 25 and Table 26. Velocities are referenced in schedule 40 pipe.

Table 34: Typical pipe velocity ranges for Rosemount 8800D and 8800DR

Process line size	Vortex meter [1]	Liquid (water) velocity ranges		Gas (air) velocity ranges	
(inches/ DN)		(ft/s)	(m/s)	(ft/s)	(m/s)
0.5/ 15	8800DF005	0.70 to 25.0	0.21 to 7.6	6.50 to 250.0	1.98 to 76.2
1/ 25	8800DF010	0.70 to 25.0	0.21 to 7.6	6.50 to 250.0	1.98 to 76.2
	8800DR010	0.25 to 8.8	0.08 to 2.7	2.29 to 87.9	0.70 to 26.8
1.5/ 40	8800DF015	0.70 to 25.0	0.21 to 7.6	6.50 to 250.0	1.98 to 76.2
	8800DR015	0.30 to 10.6	0.09 to 3.2	2.76 to 106.1	0.84 to 32.3
2/ 50	8800DF020	0.70 to 25.0	0.21 to 7.6	6.50 to 250.0	1.98 to 76.2
	8800DR020	0.42 to 15.2	0.13 to 4.6	3.94 to 151.7	1.20 to 46.2
3/ 80	8800DF030	0.70 to 25.0	0.21 to 7.6	6.50 to 250.0	1.98 to 76.2
	8800DR030	0.32 to 11.3	0.10 to 3.5	2.95 to 113.5	0.90 to 34.6
4/ 100	8800DF040	0.70 to 25.0	0.21 to 7.6	6.50 to 250.0	1.98 to 76.2
	8800DR040	0.41 to 14.5	0.12 to 4.4	3.77 to 145.2	1.15 to 44.3
6/ 150	8800DF060	0.70 to 25.0	0.21 to 7.6	6.50 to 250.0	1.98 to 76.2
	8800DR060	0.31 to 11.0	0.09 to 3.4	2.86 to 110.2	0.87 to 33.6
8/ 200	8800DF080	0.70 to 25.0	0.21 to 7.6	6.50 to 250.0	1.98 to 76.2
	8800DR080	0.40 to 14.4	0.12 to 4.4	3.75 to 144.4	1.14 to 44.0
10/ 250	8800DF100	0.90 to 25.0	0.27 to 7.6	6.50 to 250.0	1.98 to 76.2
	8800DR100	0.44 to 15.9	0.13 to 4.8	4.12 to 158.6	1.26 to 48.3
12/ 300	8800DF120	1.10 to 25.0	0.34 to 7.6	6.50 to 250.0	1.98 to 76.2

Table 34: Typical pipe velocity ranges for Rosemount 8800D and 8800DR *(continued)*

Process line size	Vortex meter (1)	Liquid (water) velocity ranges		Gas (air) velocity ranges	
(inches/ DN)		(ft/s)	(m/s)	(ft/s)	(m/s)
	8800DR120	0.63 to 17.6	0.19 to 5.4	4.58 to 176.1	1.40 to 53.7

(1) *Velocity range of the Rosemount 8800DW is the same as Rosemount 8800DF.*

Note

Table 35 is a reference of flow rates that can be measured for the standard Rosemount 8800D and the reducer 8800DR Vortex Meters. It does not consider density limitations, as described in Table 25 and Table 26.

Table 35: Water flow rate limits for the Rosemount 8800D and 8800DR

Process line size	Vortex meter (1)	Minimum and maximum measurable water flow rates(2)	
(inches/ DN)		Gallons/minute	Cubic meters/hour
0.5/ 15	8800DF005	1.76 to 23.7	0.40 to 5.4
1/ 25	8800DF010	2.96 to 67.3	0.67 to 15.3
	8800DR010	1.76 to 23.7	0.40 to 5.4
1.5/ 40	8800DF015	4.83 to 158	1.10 to 35.9
	8800DR015	2.96 to 67.3	0.67 to 15.3
2/ 50	8800DF020	7.96 to 261	1.81 to 59.4
	8800DR020	4.83 to 158.0	1.10 to 35.9
3/ 80	8800DF030	17.5 to 576	4.00 to 130
	8800DR030	7.96 to 261.0	1.81 to 59.3
4/ 100	8800DF040	30.2 to 992	6.86 to 225
	8800DR040	17.5 to 576	4.00 to 130
6/ 150	8800DF060	68.5 to 2251	15.6 to 511
	8800DR060	30.2 to 992	6.86 to 225
8/ 200	8800DF080	119 to 3898	27.0 to 885
	8800DR080	68.5 to 2251	15.6 to 511
10/ 250	8800DF100	231 to 6144	52.2 to 1395
	8800DR100	119 to 3898	27.0 to 885
12/ 300	8800DF120	391 to 8813	88.8 to 2002
	8800DR120	231 to 6144	52.2 to 1395

(1) *Velocity range of the 8800DW is the same as 8800DF.*
(2) *Conditions: 77 °F (25 °C) and 14.7 psia (1.01 bar absolute)*

Table 36: Air flow rate limits at 59 °F (15 °C)

Process pressure	Flow rate limits	Minimum and maximum air flow rates for line sizes 1/2-in./DN 15 through 1-in./DN 25							
		1/2-in./DN 15				1-in./DN 25			
		Rosemount 8800D		Rosemount 8800DR		Rosemount 8800D		Rosemount 8800DR	
		ACFM	ACMH	ACFM	ACMH	ACFM	ACMH	ACFM	ACMH
0 psig (0 bar G)	max min	27.9 4.62	47.3 7.84	Not Available	Not Available	79.2 9.71	134 16.5	27.9 4.62	47.3 7.84

Table 36: Air flow rate limits at 59 °F (15 °C) *(continued)*

Process pressure	Flow rate limits	Minimum and maximum air flow rates for line sizes 1/2-in./DN 15 through 1-in./DN 25							
		1/2-in./DN 15				1-in./DN 25			
		Rosemount 8800D		Rosemount 8800DR		Rosemount 8800D		Rosemount 8800DR	
		ACFM	ACMH	ACFM	ACMH	ACFM	ACMH	ACFM	ACMH
50 psig (3,45 bar G)	max min	27.9 1.31	47.3 2.22	Not Available	Not Available	79.2 3.72	134 6.32	27.9 1.31	47.3 2.22
100 psig (6,89 bar G)	max min	27.9 0.98	47.3 1.66	Not Available	Not Available	79.2 2.80	134 4.75	27.9 0.98	47.3 1.66
150 psig (10,3 bar G)	max min	27.9 0.82	47.3 1.41	Not Available	Not Available	79.2 2.34	134 3.98	27.9 0.82	47.3 1.41
200 psig (13,8 bar G)	max min	27.9 0.82	47.3 1.41	Not Available	Not Available	79.2 2.34	134 3.98	27.9 0.82	47.3 1.41
300 psig (20,7 bar G)	max min	27.9 0.82	47.3 1.41	Not Available	Not Available	79.2 2.34	134 3.98	27.9 0.82	47.3 1.41
400 psig (27,6 bar G)	max min	25.7 0.82	43.9 1.41	Not Available	Not Available	73.0 2.34	124 3.98	25.7 0.82	43.9 1.41
500 psig (34,5 bar G)	max min	23.0 0.82	39.4 1.41	Not Available	Not Available	66.0 2.34	112 3.98	23.0 0.82	39.4 1.41

Table 37: Air flow rate limits at 59 °F (15 °C)

Process pressure	Flow rate limits	Minimum and maximum air Flow rates for line sizes 11/2-in./DN 40 through 2-in./DN 50							
		11/2-in./DN 40				2-in./DN 50			
		Rosemount 8800D		Rosemount 8800DR		Rosemount 8800D		Rosemount 8800DR	
		ACFM	ACMH	ACFM	ACMH	ACFM	ACMH	ACFM	ACMH
0 psig (0 bar G)	max min	212 18.4	360 31.2	79.2 9.71	134 16.5	349 30.3	593 51.5	212 18.4	360 31.2
50 psig (3,45 bar G)	max min	212 8.76	360 14.9	79.2 3.72	134 6.32	349 14.5	593 24.6	212 8.76	360 14.9
100 psig (6,89 bar G)	max min	212 6.58	360 11.2	79.2 2.80	134 4.75	349 10.8	593 18.3	212 6.58	360 11.2
150 psig (10,3 bar G)	max min	212 5.51	360 9.36	79.2 2.34	134 3.98	349 9.09	593 15.4	212 5.51	360 9.36
200 psig (13,8 bar G)	max min	212 5.51	360 9.36	79.2 2.34	134 3.98	349 9.09	593 15.4	212 5.51	360 9.36
300 psig (20,7 bar G)	max min	198 5.51	337 9.36	79.2 2.34	134 3.98	326 9.09	554 15.4	198 5.51	337 9.36
400 psig (27,6 bar G)	max min	172 5.51	293 9.36	73.0 2.34	124 3.98	284 9.09	483 15.4	172 5.51	293 9.36
500 psig (34,5 bar G)	max min	154 5.51	262 9.36	66.0 2.34	112 3.98	254 9.09	432 15.4	154 5.51	262 9.36

Table 38: Air flow rate limits at 59 °F (15 °C)

Process pressure	Flow rate limits	Minimum and maximum air flow rates for line sizes 3-in./DN 80 through 4-in./DN 100							
		3-in./DN 80				4-in./DN 100			
		Rosemount 8800D		Rosemount 8800DR		Rosemount 8800D		Rosemount 8800DR	
		ACFM	ACMH	ACFM	ACMH	ACFM	ACMH	ACFM	ACMH
0 psig (0 bar G)	max min	770 66.8	1308 114	349 30.3	593 51.5	1326 115	2253 195	770 66.8	1308 114
50 psig (3,45 bar G)	max min	770 31.8	1308 54.1	349 14.5	593 24.6	1326 54.8	2253 93.2	770 31.8	1308 54.1
100 psig (6,89 bar G)	max min	770 23.9	1308 40.6	349 10.8	593 18.3	1326 41.1	2253 69.8	770 23.9	1308 40.6
150 psig (10,3 bar G)	max min	770 20.0	1308 34.0	349 9.09	593 15.4	1326 34.5	2253 58.6	770 20.0	1308 34.0
200 psig (13,8 bar G)	max min	770 20.0	1308 34.0	349 9.09	593 15.4	1326 34.5	2253 58.6	770 20.0	1308 34.0
300 psig (20,7 bar G)	max min	718 20.0	1220 34.0	326 9.09	554 15.4	1237 34.5	2102 58.6	718 20.0	1220 34.0
400 psig (27,6 bar G)	max min	625 20.0	1062 34.0	284 9.09	483 15.4	1076 34.5	1828 58.6	625 20.0	1062 34.0
500 psig (34,5 bar G)	max min	560 20.0	951 34.0	254 9.09	432 15.4	964 34.5	1638 58.6	560 20.0	951 34.0

Table 39: Air flow rate limits at 59 °F (15 °C)

Process pressure	Flow rate limits	Minimum and maximum air flow rates for line sizes 6-in./DN 150 through 8-in./DN 200							
		6-in./DN 150				8-in./DN 200			
		Rosemount 8800D		Rosemount 8800DR		Rosemount 8800D		Rosemount 8800DR	
		ACFM	ACMH	ACFM	ACMH	ACFM	ACMH	ACFM	ACMH
0 psig (0 bar G)	max min	3009 261	5112 443	1326 115	2253 195	5211 452	8853 768	3009 261	5112 443
50 psig (3,45 bar G)	max min	3009 124	5112 211	1326 54.8	2253 93.2	5211 215	8853 365	3009 124	5112 211
100 psig (6,89 bar G)	max min	3009 93.3	5112 159	1326 41.1	2253 69.8	5211 162	8853 276	3009 93.3	5112 159
150 psig (10,3 bar G)	max min	3009 78.2	5112 133	1326 34.5	2253 58.6	5211 135	8853 229	3009 78.2	5112 133
200 psig (13,8 bar G)	max min	3009 78.2	5112 133	1326 34.5	2253 58.6	5211 135	8853 229	3009 78.2	5112 133
300 psig (20,7 bar G)	max min	2807 78.2	4769 133	1237 34.5	2102 58.6	4862 135	8260 229	2807 78.2	4769 133
400 psig (27,6 bar G)	max min	2442 78.2	4149 133	1076 34.5	1828 58.6	4228 136	7183 229	2442 78.2	4149 133
500 psig (34,5 bar G)	max min	2188 78.2	3717 133	964 34.5	1638 58.6	3789 136	6437 229	2188 78.2	3717 133

Table 40: Saturated steam flow rate limits (assumes steam quality is 100%)

Process pressure	Flow rate limits	Minimum and maximum saturated steam flow rates for line sizes 1/2-in./DN 15 through 1-in./DN 25							
		1/2-in./DN 15				1-in./DN 25			
		Rosemount 8800D		Rosemount 8800DR		Rosemount 8800D		Rosemount 8800DR	
		lb/hr	kg/hr	lb/hr	kg/hr	lb/hr	kg/hr	lb/hr	kg/hr
15 psig (1,03 bar G)	max min	120 12.8	54.6 5.81	Not Available	Not Available	342 34.8	155 15.8	120 12.8	54.6 5.81
25 psig (1,72 bar G)	max min	158 14.0	71.7 6.35	Not Available	Not Available	449 39.9	203 18.1	158 14.0	71.7 6.35
50 psig (3,45 bar G)	max min	250 17.6	113 8.00	Not Available	Not Available	711 50.1	322 22.7	250 17.6	113 8.00
100 psig (6,89 bar G)	max min	429 23.1	194 10.5	Not Available	Not Available	1221 65.7	554 29.8	429 23.1	194 10.5
150 psig (10,3 bar G)	max min	606 27.4	275 12.5	Not Available	Not Available	1724 78.1	782 35.4	606 27.4	275 12.5
200 psig (13,8 bar G)	max min	782 31.2	354 14.1	Not Available	Not Available	2225 88.7	1009 40.2	782 31.2	354 14.1
300 psig (20,7 bar G)	max min	1135 37.6	515 17.0	Not Available	Not Available	3229 107	1464 48.5	1135 37.6	515 17.0
400 psig (27,6 bar G)	max min	1492 44.1	676 20.0	Not Available	Not Available	4244 125	1925 56.7	1492 44.1	676 20.0
500 psig (34,5 bar G)	max min	1855 54.8	841 24.9	Not Available	Not Available	5277 156	2393 70.7	1855 54.8	841 24.9

Note

The Rosemount 8800D measures the volumetric flow under operating conditions (i.e. the actual volume at the operating pressure and temperature–acfm or acmh), as shown above. However, gas volumes are strongly dependent on pressure and temperature. Therefore, gas quantities are typically stated in standard or normal conditions (e.g. SCFM or NCMH). (Standard conditions are typically 59 °F and 14.7 psia. Normal conditions are typically 0 °C and 1.01 bar abs.)

The flow rate limits in standard conditions are found using the equations below:

Standard Flow Rate = Actual Flow Rate X Density Ratio

Density Ratio = Density at Actual (Operating) Conditions / Density at Standard Conditions

Table 41: Saturated steam flow rate limits (assumes steam quality is 100%)

Process pressure	Flow rate limits	Minimum and maximum saturated steam flow rates for line sizes 1/2-in./DN 15 through 1-in./DN 25							
		11/2-in./DN 40				2-in./DN 50			
		Rosemount 8800D		Rosemount 8800DR		Rosemount 8800D		Rosemount 8800DR	
		lb/hr	kg/hr	lb/hr	kg/hr	lb/hr	kg/hr	lb/hr	kg/hr
15 psig (1,03 bar G)	max min	917 82.0	416 37.2	342 34.8	155 15.8	1511 135	685 61.2	917 82.0	416 37.2
25 psig (1,72 bar G)	max min	1204 93.9	546 42.6	449 39.9	203 18.1	1983 155	899 70.2	1204 93.9	546 42.6
50 psig (3,45 bar G)	max min	1904 118	864 53.4	711 50.1	322 22.7	3138 195	1423 88.3	1904 118	864 53.4

Table 41: Saturated steam flow rate limits (assumes steam quality is 100%) *(continued)*

Process pressure	Flow rate limits	Minimum and maximum saturated steam flow rates for line sizes 1/2-in./DN 15 through 1-in./DN 25							
		11/2-in./DN 40				2-in./DN 50			
		Rosemount 8800D		Rosemount 8800DR		Rosemount 8800D		Rosemount 8800DR	
		lb/hr	kg/hr	lb/hr	kg/hr	lb/hr	kg/hr	lb/hr	kg/hr
100 psig (6,89 bar G)	max min	3270 155	1483 70.1	1221 65.7	554 29.8	5389 255	2444 116	3270 155	1483 70.1
150 psig (10,3 bar G)	max min	4616 184	2094 83.2	1724 78.1	782 35.4	7609 303	3451 137	4616 184	2094 83.2
200 psig (13,8 bar G)	max min	5956 209	2702 94.5	2225 88.7	1009 40.2	9818 344	4453 156	5956 209	2702 94.5
300 psig (20,7 bar G)	max min	8644 252	3921 114	3229 107	1464 48.5	14248 415	6463 189	8644 252	3921 114
400 psig (27,6 bar G)	max min	11362 295	5154 134	4244 125	1925 56.7	18727 487	8494 221	11362 295	5154 134
500 psig (34,5 bar G)	max min	14126 367	6407 167	5277 156	2393 70.7	23284 605	10561 274	14126 367	6407 167

Table 42: Saturated steam flow rate limits (assumes steam quality is 100%)

Process pressure	Flow rate limits	Minimum and maximum saturated steam flow rates for line sizes 3-in./DN 80 through 4-in./DN 100							
		3-in./DN 80				4-in./DN 100			
		Rosemount 8800D		Rosemount 8800DR		Rosemount 8800D		Rosemount 8800DR	
		lb/hr	kg/hr	lb/hr	kg/hr	lb/hr	kg/hr	lb/hr	kg/hr
15 psig (1,03 bar G)	max min	3330 298	1510 135	1511 135	685 61.2	5734 513	2601 233	3330 298	1510 135
25 psig (1,72 bar G)	max min	4370 341	1982 155	1983 155	899 70.2	7526 587	3414 267	4370 341	1982 155
50 psig (3,45 bar G)	max min	6914 429	3136 195	3138 195	1423 88.3	11905 739	5400 335	6914 429	3136 195
100 psig (6,89 bar G)	max min	11874 562	5386 255	5389 255	2444 116	20448 968	9275 439	11874 562	5386 255
150 psig (10,3 bar G)	max min	16763 668	7603 303	7609 303	3451 137	28866 1150	13093 522	16763 668	7603 303
200 psig (13,8 bar G)	max min	21630 759	9811 344	9818 344	4453 156	37247 1307	16895 593	21630 759	9811 344
300 psig (20,7 bar G)	max min	31389 914	14237 415	14248 415	6463 189	54052 1574	24517 714	31389 914	14237 415
400 psig (27,6 bar G)	max min	41258 1073	18714 487	18727 487	8494 221	71047 1847	32226 838	41258 1073	18714 487
500 psig (34,5 bar G)	max min	51297 1334	23267 605	23284 605	10561 274	88334 2297	40068 1042	51297 1334	23267 605

Table 43: Saturated steam flow rate limits (assumes steam quality is 100%)

Process pressure	Flow rate limits	Minimum and maximum saturated steam flow rates for line sizes 6-in./DN 150 through 8-in./DN 200							
		6-in./DN 150				8-in./DN 200			
		Rosemount 8800D		Rosemount 8800DR		Rosemount 8800D		Rosemount 8800DR	
		lb/hr	kg/hr	lb/hr	kg/hr	lb/hr	kg/hr	lb/hr	kg/hr
15 psig (1,03 bar G)	max min	13013 1163	5903 528	5734 513	2601 233	22534 2015	10221 914	13013 1163	5903 528
25 psig (1,72 bar G)	max min	17080 1333	7747 605	7526 587	3414 267	29575 2308	13415 1047	17080 1333	7747 605
50 psig (3,45 bar G)	max min	27019 1676	12255 760	11905 739	5400 335	46787 2903	21222 1317	27019 1676	12255 760
100 psig (6,89 bar G)	max min	46405 2197	21049 996	20448 968	9275 439	80356 3804	36449 1725	46405 2197	21049 996
150 psig (10,3 bar G)	max min	65611 2610	29761 1184	28866 1150	13093 522	113440 4520	51455 2050	65611 2610	29761 1184
200 psig (13,8 bar G)	max min	84530 2965	38342 1345	37247 1307	16895 593	146375 5134	66395 2329	84530 2965	38342 1345
300 psig (20,7 bar G)	max min	122666 3572	55640 1620	54052 1574	24517 714	212411 6185	96348 2805	122666 3572	55640 1620
400 psig (27,6 bar G)	max min	161236 4192	73135 1901	71047 1847	32226 838	279200 7259	126643 3293	161236 4192	73135 1901
500 psig (34,5 bar G)	max min	200468 5212	90931 2364	88334 2297	40068 1042	347134 9025	157457 4094	200468 5212	90931 2364

Table 44: Saturated steam flow rate limits (assumes steam quality is 100%)

Process pressure	Flow rate limits	Minimum and maximum saturated steam flow rates for line sizes 10-in./DN 250 through 12-in./DN 300							
		10-in./DN 250				12-in./DN 300			
		Rosemount 8800D		Rosemount 8800DR		Rosemount 8800D		Rosemount 8800DR	
		lb/hr	kg/hr	lb/hr	kg/hr	lb/hr	kg/hr	lb/hr	kg/hr
15 psig (1,03 bar G)	max min	35519 3175	16111 1440	22534 2015	10221 914	50994 4554	23130 2066	35519 3175	16111 1440
25 psig (1,72 bar G)	max min	46618 4570	21146 2073	29575 2308	13415 1047	66862 5218	30328 2367	46618 4570	21146 2073
50 psig (3,45 bar G)	max min	73748 4575	33452 2075	46787 2903	21222 1317	105774 6562	47978 2976	73748 4575	33452 2075
100 psig (6,89 bar G)	max min	126660 5996	57452 2720	80356 3804	36449 1725	181663 8600	82401 3901	126660 5996	57452 2720
150 psig (10,3 bar G)	max min	178808 7125	81106 3232	113440 4520	51455 2050	256457 10218	116327 4635	178808 7125	81106 3232
200 psig (13,8 bar G)	max min	230722 8092	104654 3670	146375 5134	66395 2329	330915 11607	150101 5265	230722 8092	104654 3670
300 psig (20,7 bar G)	max min	334810 9749	151867 4422	212411 6185	96348 2805	480203 13983	217816 6343	334810 9749	151867 4422

Table 44: Saturated steam flow rate limits (assumes steam quality is 100%) *(continued)*

Process pressure	Flow rate limits	Minimum and maximum saturated steam flow rates for line sizes 10-in./DN 250 through 12-in./DN 300							
		10-in./DN 250				12-in./DN 300			
		Rosemount 8800D		Rosemount 8800DR		Rosemount 8800D		Rosemount 8800DR	
		lb/hr	kg/hr	lb/hr	kg/hr	lb/hr	kg/hr	lb/hr	kg/hr
400 psig (27,6 bar G)	max min	440085 11442	199619 5190	279200 7259	126643 3293	631195 16411	286305 7444	440085 11442	199619 5190
500 psig (34,5 bar G)	max min	547165 14226	248190 6453	347134 9025	157457 4094	784775 20404	355968 9255	547165 14226	248190 6453

Product certifications

For information about product certifications, refer to *Rosemount 8800D Series Vortex Flowmeter Approval Document* (00825-VA00-0001). You can find it at Emerson.com or contact an Emerson Flow representative.

Dimensional drawings

Single transmitter dimensions and weights

Flanged style flow meter (½- inch through 12-inch/15 mm through 300 mm line sizes)

Dimensions are in inches (millimeters).

Figure 6: Dimensional drawing for ½ inch through 1½ inch (15 mm through 40 mm) flanged style flow meter

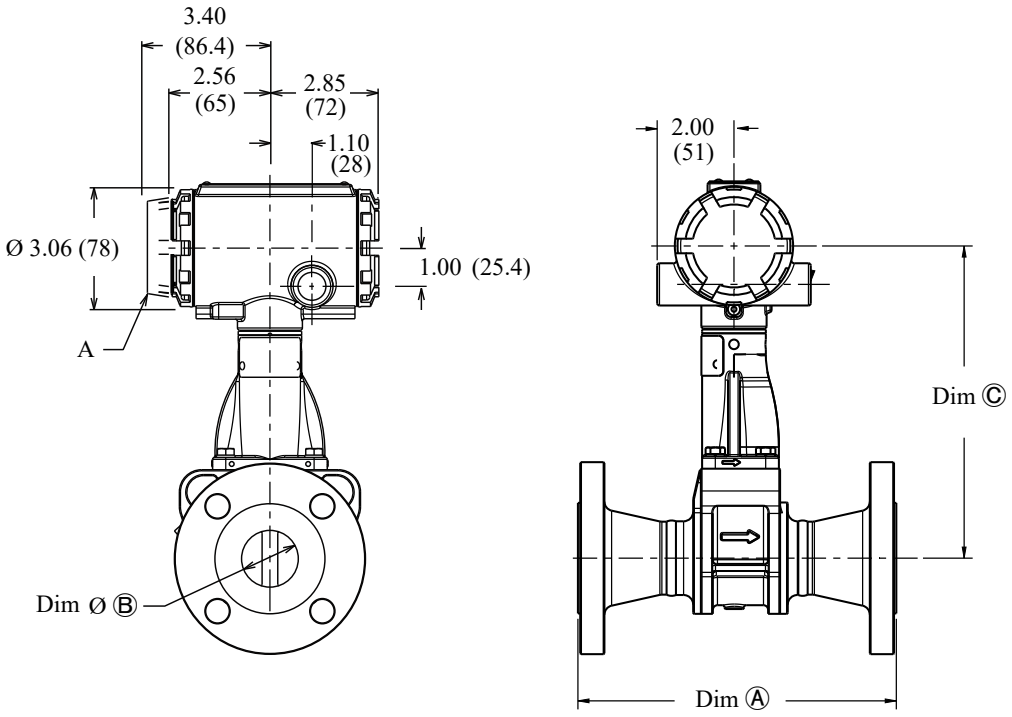

A. Display option

Note

See Table 45 for Dim Ⓐ, Dim ØⒷ, and Dim Ⓒ values.

Figure 7: Dimensional drawing for 2 inch through 12 inch (50 mm through 300 mm) flanged style flow meter

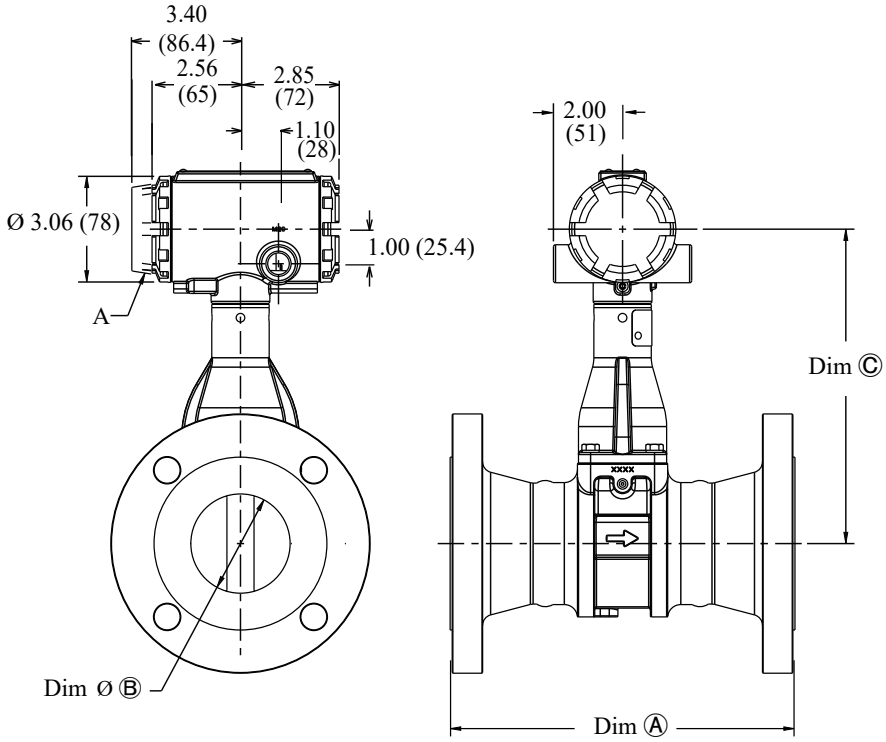

A. Display option

Note
See Table 45 for Dim Ⓐ, Dim ØⒷ, and Dim Ⓒ values.

Table 45: Dimensions and weights for flanged style flow meter

Nominal size inch (mm)	Flange rating	Dim Ⓐ inch (mm)	Dim Ⓐ (RTJ) inch (mm)	Dim ØⒷ inch (mm)	Dim Ⓒ inch (mm)	Weight lb (kg)[1]
½ (15)	Class 150	6.8 (173)	N/A	0.54 (13,7)	7.6 (193)	9 (4)
	Class 300	7.2 (183)	7.6 (193)	0.54 (13,7)	7.6 (193)	10 (5)
	Class 600	7.7 (196)	7.6 (193)	0.54 (13,7)	7.6 (193)	11 (5)
	Class 900	8.3 (211)	8.3 (211)	0.54 (13,7)	7.6 (193)	15 (7)
	PN 16/40	6.1 (155)	N/A	0.54 (13,7)	7.6 (193)	10 (5)
	PN 100	6.6 (168)	N/A	0.54 (13,7)	7.6 (193)	12 (6)
	JIS 10K/20K	6.3 (160)	N/A	0.54 (13,7)	7.6 (193)	10 (5)
	JIS 40K	7.3 (185)	N/A	0.54 (13,7)	7.6 (193)	14 (6)

Table 45: Dimensions and weights for flanged style flow meter *(continued)*

Nominal size inch (mm)	Flange rating	Dim Ⓐ inch (mm)	Dim Ⓐ (RTJ) inch (mm)	Dim ØⒷ inch (mm)	Dim Ⓒ inch (mm)	Weight lb (kg)[1]
1 (25)	Class 150	7.5 (191)	7.8 (198)	0.95 (24,1)	7.7 (196)	12 (6)
	Class 300	8.0 (203)	8.4 (213)	0.95 (24,1)	7.7 (196)	15 (7)
	Class 600	8.5 (216)	8.5 (216)	0.95 (24,1)	7.7 (196)	16 (7)
	Class 900	9.4 (239)	9.4 (239)	0.95 (24,1)	7.7 (196)	24 (11)
	Class 1500	9.4 (239)	9.4 (239)	0.95 (24,1)	7.7 (196)	24 (11)
	PN 16/40	6.2 (157)	N/A	0.95 (24,1)	7.7 (196)	14 (6)
	PN 100	7.7 (196)	N/A	0.95 (24,1)	7.7 (196)	20 (9)
	PN 160	7.7 (196)	N/A	0.95 (24,1)	7.7 (196)	20 (9)
	JIS 10K/20K	6.5 (165)	N/A	0.95 (24,1)	7.7 (196)	14 (6)
	JIS 40K	7.8 (198)	N/A	0.95 (24,1)	7.7 (196)	18 (8)
1½ (40)	Class 150	8.2 (208)	8.6 (218)	1.49 (37,8)	8.1 (206)	18 (8)
	Class 300	8.7 (221)	9.1 (231)	1.49 (37,8)	8.1 (206)	23 (10)
	Class 600	9.3 (236)	9.3 (236)	1.49 (37,8)	8.1 (206)	26 (12)
	Class 900	10.3 (262)	10.3 (262)	1.49 (37,8)	8.1 (206)	37 (17)
	Class 1500	10.3 (262)	10. 3(262)	1.49 (37,8)	8.1 (206)	37 (17)
	PN 16/40	6.9 (175)	N/A	1.49 (37,8)	8.1 (206)	19 (9)
	PN 100	8.2 (208)	N/A	1.49 (37,8)	8.1 (206)	28 (13)
	PN 160	8.4 (213)	N/A	1.49 (37,8)	8.1 (206)	30 (13)
	JIS 10K/20K	7.3 (185)	N/A	1.49 (37,8)	8.1 (206)	19 (8)
	JIS 40K	8.4 (213)	N/A	1.49 (37,8)	8.1 (206)	26 (12)
2 (50)	Class 150	9.2 (234)	9.6 (243)	1.92 (48,8)	8.5 (216)	22 (10)
	Class 300	9.7 (246)	10.2 (259)	1.92 (48,8)	8.5 (216)	26 (12)
	Class 600	10.5 (267)	10.6 (269)	1.92 (48,8)	8.5 (216)	30 (14)
	Class 900	12.7 (323)	12.9 (328)	1.92 (48,8)	8.5 (216)	60 (27)
	Class 1500	12.7 (323)	12.9 (328)	1.67 (42,4)	8.5 (216)	62 (28)
	PN 16/40	8.0 (203)	N/A	1.92 (48,8)	8.5 (216)	23 (11)
	PN 63/64	9.1 (231)	N/A	1.92 (48,8)	8.5 (216)	31 (14)
	PN 100	9.6 (244)	N/A	1.92 (48,8)	8.5 (216)	37 (17)
	PN 160	10.2 (259)	N/A	1.92 (48,8)	8.5 (216)	39 (18)
	PN 250	10.9 (277)	N/A	1.67 (42,4)	8.5 (216)	47 (22)
	JIS 10K	7.7 (195)	N/A	1.92 (48,8)	8.5 (216)	20 (9)
	JIS 20K	8.3 (210)	N/A	1.92 (48,8)	8.5 (216)	20 (9)
	JIS 40K	9.8 (249)	N/A	1.92 (48,8)	8.5 (216)	29 (13)

Table 45: Dimensions and weights for flanged style flow meter *(continued)*

Nominal size inch (mm)	Flange rating	Dim Ⓐ inch (mm)	Dim Ⓐ (RTJ) inch (mm)	Dim ØⒷ inch (mm)	Dim Ⓒ inch (mm)	Weight lb (kg)[1]
3 (80)	Class 150	9.9 (251)	10.3 (262)	2.87 (72,9)	9.1 (231)	37 (17)
	Class 300	10.6 (269)	11.1 (282)	2.87 (72,9)	9.1 (231)	47 (21)
	Class 600	11.4 (290)	11.5 (292)	2.87 (72,9)	9.1 (231)	53 (24)
	Class 900	12.9 (328)	13.0 (330)	2.87 (72,9)	9.1 (231)	76 (35)
	Class 1500	14.1 (358)	14.2 (361)	2.60 (66)	9.1 (231)	109 (49)
	PN 16/40	8.9 (226)	N/A	2.87 (72,9)	9.1 (231)	37 (17)
	PN 63/64	10.0 (254)	N/A	2.87 (72,9)	9.1 (231)	45 (21)
	PN 100	10.5 (267)	N/A	2.87 (72,9)	9.1 (231)	55 (25)
	PN 160	11.1 (282)	N/A	2.87 (72,9)	9.1 (231)	60 (27)
	JIS 10K	7.9 (201)	N/A	2.87 (72,9)	9.1 (231)	28 (13)
	JIS 20K	9.3 (236)	N/A	2.87 (72,9)	9.1 (231)	35 (16)
	JIS 40K	11.0 (279)	N/A	2.87 (72,9)	9.1 (231)	50 (29)
4 (100)	Class 150	10.3 (262)	10.6 (269)	3.79 (96,3)	9.6 (244)	51 (23)
	Class 300	11.0 (279)	11.5 (292)	3.79 (96,3)	9.6 (244)	72 (32)
	Class 600	12.8 (325)	12.9 (328)	3.79 (96,3)	9.6 (244)	98 (44)
	Class 900	13.8 (351)	13.9 (353)	3.79 (96,3)	9.6 (244)	121 (55)
	Class 1500	14.5 (368)	14.6 (371)	3.40 (86,4)	9.6 (244)	163 (74)
	PN 16	8.4 (213)	N/A	3.79 (96,3)	9.6 (244)	40 (18)
	PN 40	9.4 (239)	N/A	3.79 (96,3)	9.6 (244)	50 (22)
	PN 63/64	10.4 (264)	N/A	3.79 (96,3)	9.6 (244)	63 (28)
	PN 100	11.3 (287)	N/A	3.79 (96,3)	9.6 (244)	79 (36)
	PN 160	12.1 (307)	N/A	3.79 (96,3)	9.6 (244)	86 (39)
	JIS 10K	8.7 (220)	N/A	3.79 (96,3)	9.6 (244)	38 (17)
	JIS 20K	8.7 (220)	N/A	3.79 (96,3)	9.6 (244)	45 (21)
	JIS 40K	11.8 (300)	N/A	3.79 (96,3)	9.6 (244)	76 (34)
6 (150)	Class 150	11.6 (295)	12.0 (305)	5.7 (144,8)	10.8 (274)	81 (37)
	Class 300	12.3 (312)	12.8 (325)	5.7 (144,8)	10.8 (274)	120 (55)
	Class 600	14.3 (363)	14.4 (366)	5.7 (144,8)	10.8 (274)	187 (55)
	Class 900	16.1 (409)	16.2 (411)	5.14 (130,6)	10.8 (274)	278 (126)
	Class 1500	18.6 (472)	18.8 (478)	5.14 (130,6)	10.8 (274)	376 (170)
	PN 16	8.9 (226)	N/A	5.7 (144,8)	10.8 (274)	66 (30)
	PN 40	10.5 (267)	N/A	5.7 (144,8)	10.8 (274)	86 (39)
	PN 63/64	12.1 (307)	N/A	5.7 (144,8)	10.8 (274)	130 (59)
	PN 100	13.6 (345)	N/A	5.7 (144,8)	10.8 (274)	160 (73)
	JIS 10K	10.6 (270)	N/A	5.7 (144,8)	10.8 (274)	70 (32)
	JIS 20K	10.6 (270)	N/A	5.7 (144,8)	10.8 (274)	88 (40)
	JIS 40K	14.2 (361)	N/A	5.7 (144,8)	10.8 (274)	166 (75)

Table 45: Dimensions and weights for flanged style flow meter *(continued)*

Nominal size inch (mm)	Flange rating	Dim Ⓐ inch (mm)	Dim Ⓐ (RTJ) inch (mm)	Dim ØⒷ inch (mm)	Dim Ⓒ inch (mm)	Weight lb (kg)[1]
8 (200)	Class 150	13.5 (343)	13.9 (353)	7.55 (191,8)	11.7 (297)	142 (64)
	Class 300	14.3 (363)	14.8 (376)	7.55 (191,8)	11.7 (297)	199 (90)
	Class 600	16.5 (419)	16.7 (424)	7.55 (191,8)	11.7 (297)	299 (135)
	Class 900	18.8 (478)	18.9 (480)	6.62 (168,1)	11.7 (297)	479 (217)
	Class 1500	22.8 (579)	23.2 (589)	6.62 (168,1)	11.7 (297)	652 (296)
	PN 10	10.4 (264)	N/A	7.55 (191,8)	11.7 (297)	111 (50)
	PN 16	10.4 (264)	N/A	7.55 (191,8)	11.7 (297)	109 (50)
	PN 25	11.8 (300)	N/A	7.55 (191,8)	11.7 (297)	138 (63)
	PN 40	12.5 (318)	N/A	7.55 (191,8)	11.7 (297)	157 (71)
	PN 63/64	14.2 (361)	N/A	7.55 (191,8)	11.7 (297)	217 (99)
	PN 100	15.8 (401)	N/A	7.55 (191,8)	11.7 (297)	283 (128)
	JIS 10K	12.2 (310)	N/A	7.55 (191,8)	11.7 (297)	110 (50)
	JIS 20K	12.2 (310)	N/A	7.55 (191,8)	11.7 (297)	135 (61)
	JIS 40K	16.5 (419)	N/A	7.55 (191,8)	11.7 (297)	256 (116)
10 (250)	Class 150	14.5 (368)	14.9 (378)	9.56 (243)	12.8 (325)	198 (90)
	Class 300	15.8 (401)	16.3 (414)	9.56 (243)	12.8 (325)	286 (130)
	Class 600	19.0 (483)	19.2 (488)	9.56 (243)	12.8 (325)	478 (220)
	PN 10	11.9 (302)	N/A	9.56 (243)	12.8 (325)	157 (71)
	PN 16	12.0 (305)	N/A	9.56 (243)	12.8 (325)	162 (74)
	PN 25	13.5 (343)	N/A	9.56 (243)	12.8 (325)	199 (90)
	PN 40	14.8 (376)	N/A	9.56 (243)	12.8 (325)	247 (112)
	PN 63/64	16.4 (417)	N/A	9.56 (243)	12.8 (325)	308 (140)
	PN 100	18.9 (480)	N/A	9.56 (243)	12.8 (325)	445 (202)
	JIS 10K	14.5 (368)	N/A	9.56 (243)	12.8 (325)	175 (79)
	JIS 20K	14.5 (368)	N/A	9.56 (243)	12.8 (325)	222 (101)
	JIS 40K	18.1 (460)	N/A	9.56 (243)	12.8 (325)	379 (172)

Table 45: Dimensions and weights for flanged style flow meter *(continued)*

Nominal size inch (mm)	Flange rating	Dim Ⓐ inch (mm)	Dim Ⓐ (RTJ) inch (mm)	Dim ØⒷ inch (mm)	Dim Ⓒ inch (mm)	Weight lb (kg)(1)
12 (300)	Class 150	16.8 (427)	17.1 (434)	11.38 (289)	13.7 (348)	298 (135)
	Class 300	18.0 (457)	18.5 (470)	11.38 (289)	13.7 (348)	416 (189)
	Class 600	20.5 (521)	20.6 (523)	11.38 (289)	13.7 (348)	595 (270)
	PN 10	13.1 (333)	N/A	11.38 (289)	13.7 (348)	204 (93)
	PN 16	13.9 (353)	N/A	11.38 (289)	13.7 (348)	225 (102)
	PN 25	15.0 (381)	N/A	11.38 (289)	13.7 (348)	269 (122)
	PN 40	16.8 (427)	N/A	11.38 (289)	13.7 (348)	348 (158)
	PN 63/64	18.8 (478)	N/A	11.38 (289)	13.7 (348)	431 (196)
	PN 100	21.2 (538)	N/A	11.38 (289)	13.7 (348)	644 (292)
	JIS 10K	15.7 (399)	N/A	11.38 (289)	13.7 (348)	223 (101)
	JIS 20K	15.7 (399)	N/A	11.38 (289)	13.7 (348)	284 (129)
	JIS 40K	19.6 (498)	N/A	11.38 (289)	13.7 (348)	494 (224)

(1) *With integral transmitter, and without MTA or CPA options.*

Reducer style flow meter

Figure 8: Dimensional drawing for reducer style flow meters

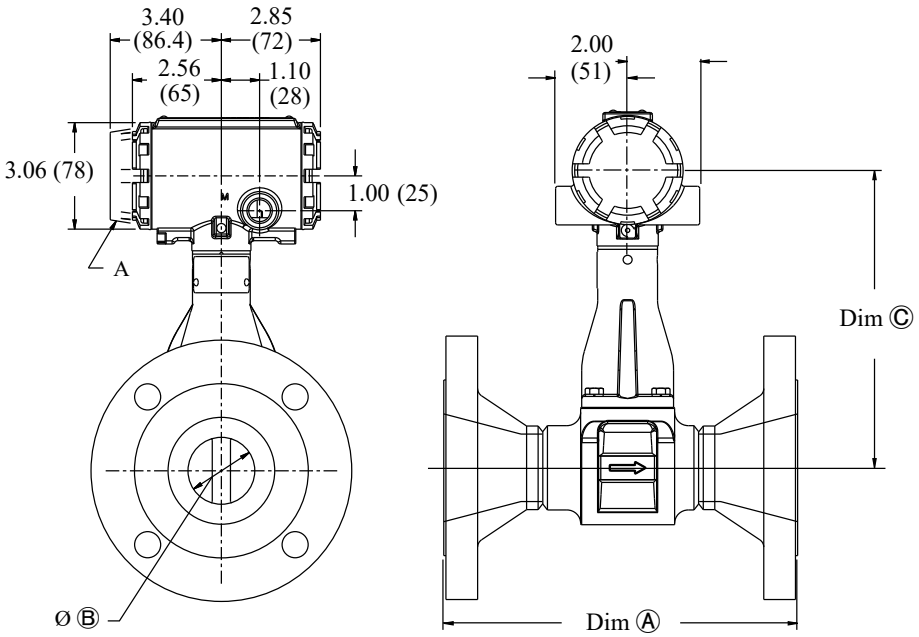

A. Display option

Note
See Table 46 for Dim Ⓐ, ØⒷ, and Dim Ⓒ values.

Table 46: Dimensions and weights for reducer style flow meter

Nominal size inch (mm)	Flange rating	Face-to-face Dim Ⓐ inch (mm)	Dim Ⓐ RTJ inch (mm)	ØⒷ inch (mm)	Dim Ⓒ inch (mm)	Weight lb (kg)
1 (25)	Class 150	7.5 (191)	7.9 (201)	0.54 (13,7)	7.6 (193)	12 (5)
	Class 300	8.0 (203)	8.4 (213)	0.54 (13,7)	7.6 (193)	14 (6)
	Class 600	8.5 (216)	8.5 (216)	0.54 (13,7)	7.6 (193)	15 (7)
	Class 900	9.4 (239)	9.4 (239)	0.54 (13,7)	7.6 (193)	21 (9)
	PN 16/40	6.2 (157)	N/A	0.54 (13,7)	7.6 (193)	13 (6)
	PN 100	7.7 (196)	N/A	0.54 (13,7)	7.6 (193)	18 (8)
1 ½ (40)	Class 150	8.2 (208)	8.6 (218)	0.95 (24,1)	7.7 (196)	16 (7)
	Class 300	8.7 (221)	9.1 (231)	0.95 (24,1)	7.7 (196)	21 (10)
	Class 600	9.3 (236)	9.3 (236)	0.95 (24,1)	7.7 (196)	24 (11)
	Class 900	10.3 (262)	10.3 (262)	0.95 (24,1)	7.7 (196)	35 (16)
	PN 16/40	6.9 (175)	N/A	0.95 (24,1)	7.7 (196)	18 (8)
	PN 100	8.2 (208)	N/A	0.95 (24,1)	7.7 (196)	26 (12)
	PN 160	8.4 (213)	N/A	0.95 (24,1)	7.7 (196)	28 (13)
2 (50)	Class 150	9.2 (234)	9.6 (244)	1.49 (37,8)	8.1 (206)	23 (10)
	Class 300	9.7 (246)	10.3 (262)	1.49 (37,8)	8.1 (206)	27 (12)
	Class 600	10.5 (267)	10.6 (269)	1.49 (37,8)	8.1 (206)	31 (14)
	Class 900	12.7 (323)	12.9 (328)	1.49 (37,8)	8.1 (206)	61 (28)
	PN 16/40	8.0 (203)	N/A	1.49 (37,8)	8.1 (206)	24 (11)
	PN 63/64	9.1 (231)	N/A	1.49 (37,8)	8.1 (206)	31 (14)
	PN 100	9.6 (244)	N/A	1.49 (37,8)	8.1 (206)	37 (17)
	PN 160	10.2 (259)	N/A	1.49 (37,8)	8.1 (206)	40 (18)
3 (80)	Class 150	9.9 (251)	10.3 (262)	1.92 (48,8)	8.5 (216)	33 (15)
	Class 300	10.6 (269)	11.1 (282)	1.92 (48,8)	8.5 (216)	43 (19)
	Class 600	11.4 (290)	11.5 (292)	1.92 (48,8)	8.5 (216)	49 (22)
	Class 900	12.9 (328)	13.0 (330)	1.92 (48,8)	8.5 (216)	73 (33)
	PN 16/40	8.9 (226)	N/A	1.92 (48,8)	8.5 (216)	33 (15)
	PN 63/64	10.0 (254)	N/A	1.92 (48,8)	8.5 (216)	42 (19)
	PN 100	10.5 (267)	N/A	1.92 (48,8)	8.5 (216)	52 (24)
	PN 160	11.1 (282)	N/A	1.92 (48,8)	8.5 (216)	58 (26)

Table 46: Dimensions and weights for reducer style flow meter *(continued)*

Nominal size inch (mm)	Flange rating	Face-to-face Dim Ⓐ inch (mm)	Dim Ⓐ RTJ inch (mm)	ØⒷ inch (mm)	Dim Ⓒ inch (mm)	Weight lb (kg)
4 (100)	Class 150	10.3 (262)	10.7 (272)	2.87 (72,9)	9.1 (231)	46 (21)
	Class 300	11.0 (279)	11.5 (282)	2.87 (72,9)	9.1 (231)	67 (30)
	Class 600	12.8 (325)	12.9 (328)	2.87 (72,9)	9.1 (231)	94 (43)
	Class 900	13.8 (351)	13.9 (353)	2.87 (72,9)	9.1 (231)	118 (54)
	PN 16	8.4 (213)	N/A	2.87 (72,9)	9.1 (231)	36 (16)
	PN 40	9.4 (239)	N/A	2.87 (72,9)	9.1 (231)	46 (21)
	PN 63/64	10.4 (264)	N/A	2.87 (72,9)	9.1 (231)	60 (27)
	PN 100	11.3 (287)	N/A	2.87 (72,9)	9.1 (231)	77 (35)
	PN 160	12.1 (307)	N/A	2.87 (72,9)	9.1 (231)	85 (38)
6 (150)	Class 150	11.6 (295)	12.0 (305)	3.79 (96,3)	9.6 (244)	70 (32)
	Class 300	12.3 (312)	12.9 (328)	3.79 (96,3)	9.6 (244)	113 (51)
	Class 600	14.3 (363)	14.4 (366)	3.79 (96,3)	9.6 (244)	185 (84)
	Class 900	16.1 (409)	16.2 (411)	3.79 (96,3)	9.6 (244)	246 (112)
	PN 16	8.9 (226)	N/A	3.79 (96,3)	9.6 (244)	59 (27)
	PN 40	10.5 (267)	N/A	3.79 (96,3)	9.6 (244)	82 (37)
	PN 63/64	12.1 (307)	N/A	3.79 (96,3)	9.6 (244)	125 (57)
	PN 100	13.6 (345)	N/A	3.79 (96,3)	9.6 (244)	162 (73)
	PN 160	14.7 (373)	N/A	3.79 (96,3)	9.6 (244)	188 (85)
8 (200)	Class 150	13.5 (343)	14.0 (356)	5.70 (144,8)	10.8 (274)	124 (56)
	Class 300	14.3 (363)	14.8 (376)	5.70 (144,8)	10.8 (274)	186 (84)
	Class 600	16.5 (419)	16.7 (424)	5.70 (144,8)	10.8 (274)	295 (134)
	PN 10	10.4 (264)	N/A	5.70 (144,8)	10.8 (274)	91 (41)
	PN 16	10.4 (264)	N/A	5.70 (144,8)	10.8 (274)	91 (41)
	PN 25	11.8 (300)	N/A	5.70 (144,8)	10.8 (274)	124 (56)
	PN 40	12.5 (318)	N/A	5.70 (144,8)	10.8 (274)	145 (66)
	PN 63/64	14.2 (361)	N/A	5.70 (144,8)	10.8 (274)	211 (96)
	PN 100	15.8 (401)	N/A	5.70 (144,8)	10.8 (274)	283 (128)
10 (250)	Class 150	14.5 (368)	14.9 (378)	7.55 (191,8)	11.7 (297)	182 (83)
	Class 300	15.8 (401)	16.3 (414)	7.55 (191,8)	11.7 (297)	282 (128)
	Class 600	19.0 (483)	19.2 (488)	7.55 (191,8)	11.7 (297)	490 (222)
	PN 10	11.9 (302)	N/A	7.55 (191,8)	11.7 (297)	139 (63)
	PN 16	12.0 (305)	N/A	7.55 (191,8)	11.7 (297)	149 (67)
	PN 25	13.5 (343)	N/A	7.55 (191,8)	11.7 (297)	191 (87)
	PN 40	14.8 (376)	N/A	7.55 (191,8)	11.7 (297)	246 (112)
	PN 63/64	16.4 (417)	N/A	7.55 (191,8)	11.7 (297)	314 (143)
	PN 100	18.9 (480)	N/A	7.55 (191,8)	11.7 (297)	463 (210)

Table 46: Dimensions and weights for reducer style flow meter *(continued)*

Nominal size inch (mm)	Flange rating	Face-to-face Dim Ⓐ inch (mm)	Dim Ⓐ RTJ inch (mm)	ØⒷ inch (mm)	Dim Ⓒ inch (mm)	Weight lb (kg)
12 (300)	Class 150	16.8 (427)	17.1 (434)	9.56 (242,8)	12.8 (325)	282 (128)
	Class 300	18.0 (457)	18.5 (470)	9.56 (242,8)	12.8 (325)	412 (187)
	Class 600	20.5 (521)	20.6 (523)	9.56 (242,8)	12.8 (325)	610 (297)
	PN 10	13.1 (333)	N/A	9.56 (242,8)	12.8 (325)	188 (85)
	PN 16	13.9 (353)	N/A	9.56 (242,8)	12.8 (325)	212 (96)
	PN 25	15.0 (381)	N/A	9.56 (242,8)	12.8 (325)	262 (119)
	PN 40	16.8 (427)	N/A	9.56 (242,8)	12.8 (325)	350 (159)
	PN 63/64	18.8 (478)	N/A	9.56 (242,8)	12.8 (325)	444 (201)
	PN 100	21.2 (538)	N/A	9.56 (242,8)	12.8 (325)	672 (305)
14 (350)	Class 150	19.8 (502)	-	11.38 (289.0)	13.7 (348)	410 (186)
	Class 300	19.8 (502)	-	11.38 (289)	13.7 (348)	508 (230)

Wafer style flow meters

Figure 9: Dimensional drawing for wafer style flow meters

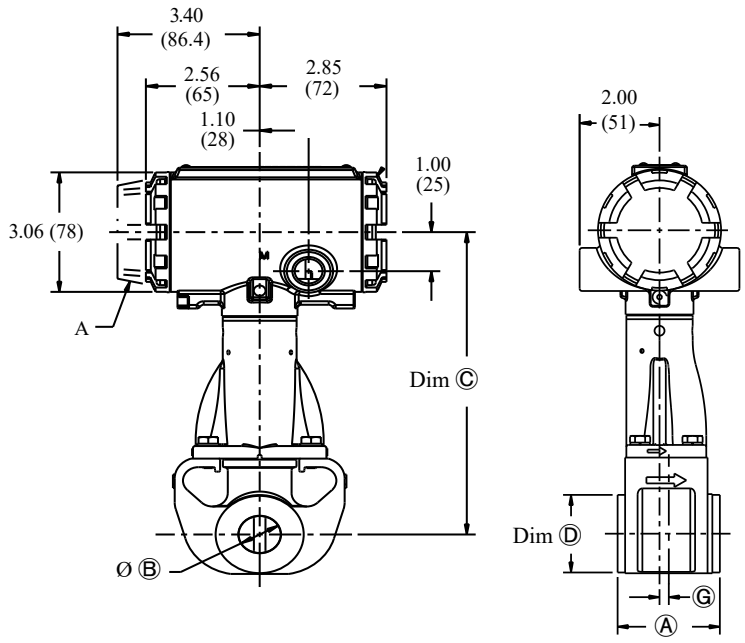

A. Display option

Note
See Table 47 for Dim Ⓐ, ØⒷ, Dim Ⓒ, Dim Ⓓ, and Dim Ⓖ.

Table 47: Dimensions and weights for wafer-style flow meter

Nominal size inch (mm)	Face-to-face Dim Ⓐ Inch (mm)	ØⒷ Inch (mm)	Dim Ⓒ Inch (mm)	Dim Ⓓ Inch (mm)	Dim Ⓖ Inch (mm)	Weight lb (kg)[1]
½ (15)	2.56 (65)	0.54 (13,2)	7.63 (194)	1.38 (35,1)	0.17 (4,3)	6.8 (3,1)
1 (25)	2.56 (65)	0.95 (24,1)	7.74 (197)	1.98 (50,3)	0.23 (5,9)	7.4 (3,4)
1½ (40)	2.56 (65)	1.49 (37,8)	8.14 (207)	2.87 (72,9)	0.18 (4,6)	10.0 (4,5)
2 (50)	2.56 (65)	1.92 (49)	8.85 (225)	3.86 (98)	0.12 (3)	10.6 (4,8)
3 (80)	2.56 (65)	2.87 (73)	9.62 (244)	5.00 (127)	0.25 (6)	13.6 (6,2)
4 (100)	3.42 (87)	3.79 (96)	10.48 (266)	6.20 (157.5)	0.44 (11)	21.4 (9,7)
6 (150)	5.00 (127)	5.70 (145)	10.29 (261)	8.50 (216)	0.30 (7,6)	36 (16)
8 (200)	6.60 (168)	7.55 (192)	11.22 (285)	10.62 (270)	0.70 (17,8)	62 (28)

(1) *With integral transmitter, and without CPA option.*

Weld end style flow meters

Figure 10: Dimensional drawing for weld end style flow meters

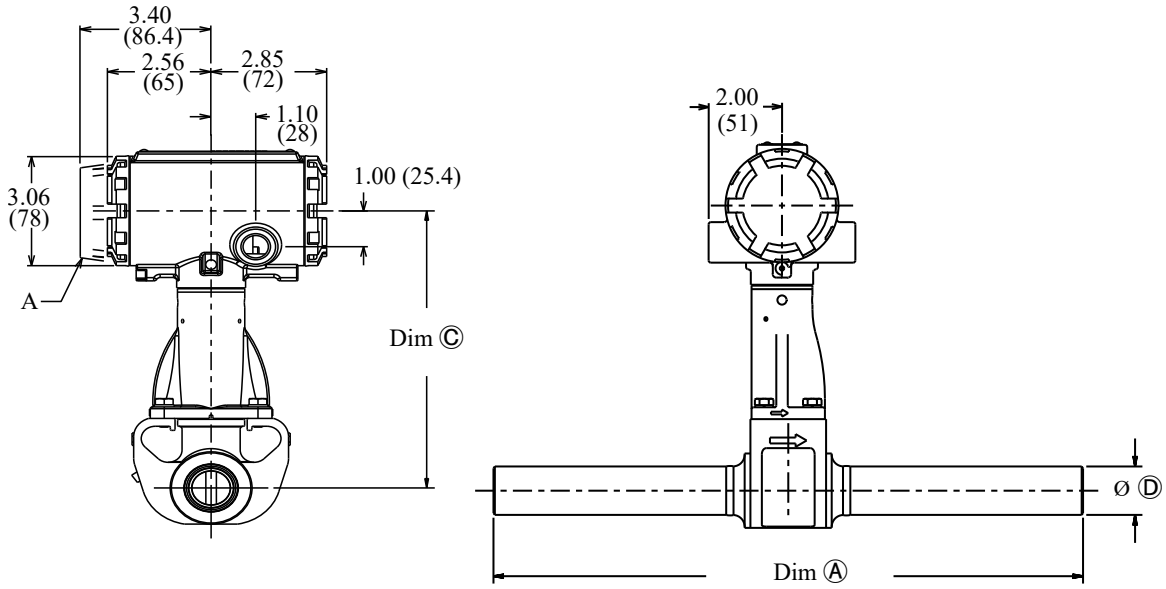

A. Display option

Note
See Table 48 for Dim Ⓐ, Dim Ⓒ, and ØⒹ values.

Table 48: Dimensions and weights for weld end style flow meter

Nominal size in. (mm)	Pipe schedule	Dim Ⓐ inch (mm)	Dim Ⓒ inch (mm)	ØⒹ inch (mm)	Weight lb (kg)[1]
0.5 (15)	10, 40, 160	16.0 (406)	7.6 (194)	0.84 (21.3)	8 (4)
1 (25)	10, 40, 80, 160	16.0 (406)	7.7 (197)	1.32 (33.4)	10 (5)
1.5 (40)	10, 40, 80, 160	16.0 (406)	8.1 (207)	1.90 (48.3)	13 (6)
2 (50)	10, 40, 80	16.0 (406)	8.5 (216)	2.38 (60.3)	15 (7)
	160	16.0 (406)	8.5 (216)	2.38 (60.3)	18 (8)
3 (80)	10, 40, 80	16.0 (406)	9.1 (230)	3.50 (88.9)	24 (11)
	160	16.0 (406)	9.1 (230)	3.50 (88.9)	29 (13)
4 (100)	10, 40, 80	16.0 (406)	9.6 (244)	4.50 (114.3)	32 (15)
	160	16.0 (406)	9.6 (244)	4.50 (114.3)	43 (19)
6 (150)	10, 40, 80	18.0 (457)	10.8 (274)	6.63 (168)	60 (28)
	160	18.0 (457)	10.8 (274)	6.63 (168)	87 (40)
8 (200)	40, 80	18.0 (457)	11.7 (297)	8.63 (219)	89 (40)
	160	18.0 (457)	11.7 (297)	8.63 (219)	144 (66)
10 (250)	40, 80, 160	20 (508)	12.8 (325)	10.75 (273)	135 (61)
12 (300)	40, 80, 160	20 (508)	13.7 (348)	12.75 (324)	185 (84.1)

(1) *With integral transmitter, and without MTA or CPA option.*

Threaded end style flow meters

Figure 11: Dimensional drawing for threaded end style flow meters

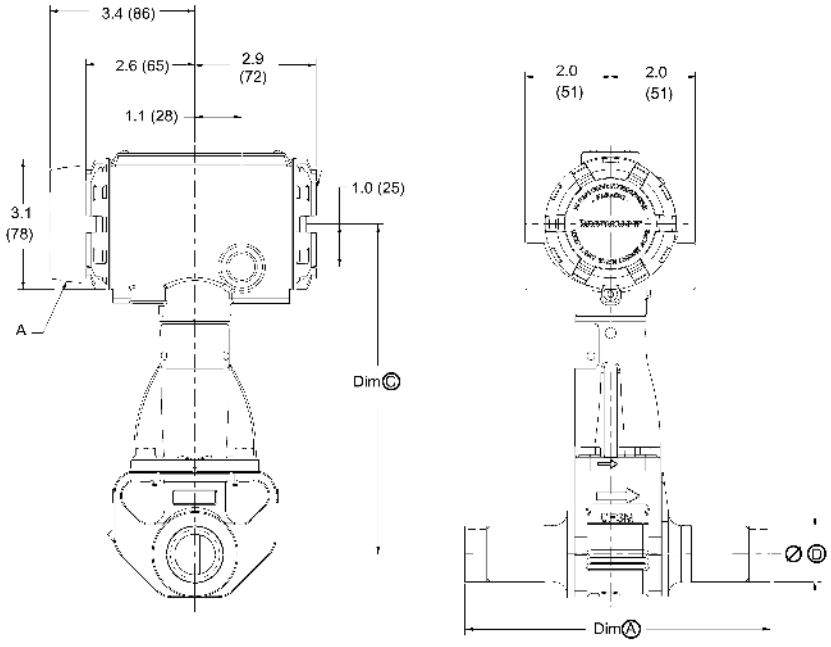

A. Display option

Note
See Table 49 for Dim Ⓐ, Dim Ⓒ, and ØⒹ values.

Table 49: Dimensions and weights for threaded end style flow meter

Nominal size in. (mm)	Dim Ⓐ inch (mm)	Dim Ⓒ inch (mm)	ØⒹ inch (mm)	Weight lb (kg)(1)
Straight thread				
0.5 (15)	7.1 (180)	7.6 (194)	.84 (21)	7 (3)
1 (25)	7.1 (180)	7.7 (197)	1.3 (33)	8 (4)
1.5 (40)	7.3 (186)	8.1 (207)	1.9 (48)	11 (5)
2 (50)	10.0 (254)	8.5 (216)	2.4 (60)	12 (6)
Threaded reducer				
1 (25)	7.1 (180)	7.6 (194)	1.3 (33)	9 (4)
1.5 (40)	7.3 (186)	7.7 (197)	1.9 (48)	10 (5)
2 (50)	10.0 (254)	8.1 (207)	2.4 (60)	14 (7)

(1) *With integral transmitter, and without MTA or CPA option.*

Height variation and conduit entry with remote transmitters

Table 50 shows the location of the conduit entry and the adjusted height of the meter when a remote transmitter used.

Note
Dimension Ⓔ is measured from the center of the process pipe, and is the same for all process fitting types.

Table 50: Height variation and conduit entry with remote transmitters

	Meter size inch (mm)	Dim Ⓔ inch (mm)
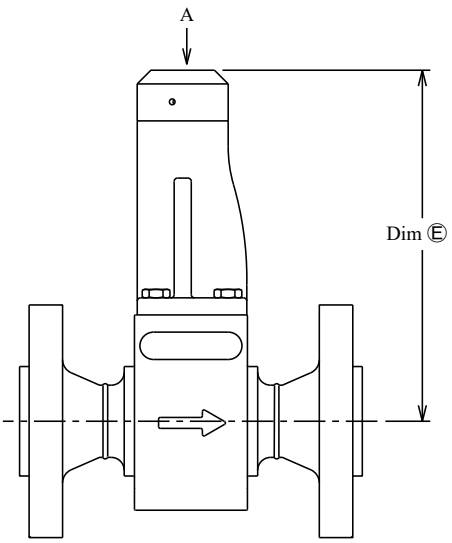	½ (15)	6.4 (162)
	1 (25)	6.5 (165)
	1½ (40)	6.8 (173)
	2 (50)	7.2 (183)
	3 (80)	7.8 (198)
	4 (100)	8.3 (211)
	6 (150)	9.5 (241)
	8 (200)	10.4 (264)
	10 (250)	11.4 (290)
	12 (300)	12.3 (312)

A Conduit entry

Dim Ⓔ Dimension to top of meter, add clearance for cable/fitting.

Clearance for MTA option

When the MTA option is selected, some additional clearance is required for the MTA sensor cable

Note
Dimension Ⓕ is measured from the center of the process pipe, and is the same for all process fitting types.

Table 51: Clearance for MTA option

	Meter size inch (mm)	Dim Ⓕ inch (mm)
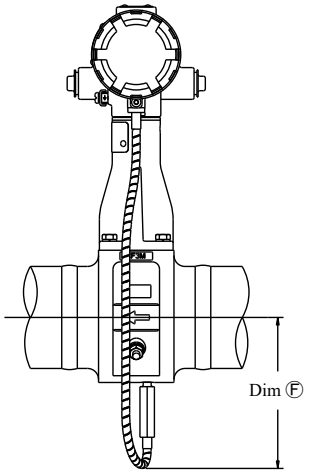	2 (50)	4.5 (114)
	3 (80)	4.7 (119)
	4 (100)	5.3 (135)
	6 (150)	5.9 (150)
	8 (200)	7.4 (188)
	10 (250)	8.3 (211)
	12 (300)	9.3 (236)
	14 (350)	10.1 (256)

Location for CPA valve option

When the CPA option is ordered, the CPA valve can be in one of three general locations depending on the size of the meter.

Note
On some models, the orientation or relative location of the CPA valve may vary. Contact an Emerson representative for more precise information if needed.

Figure 12: Location for CPA valve option

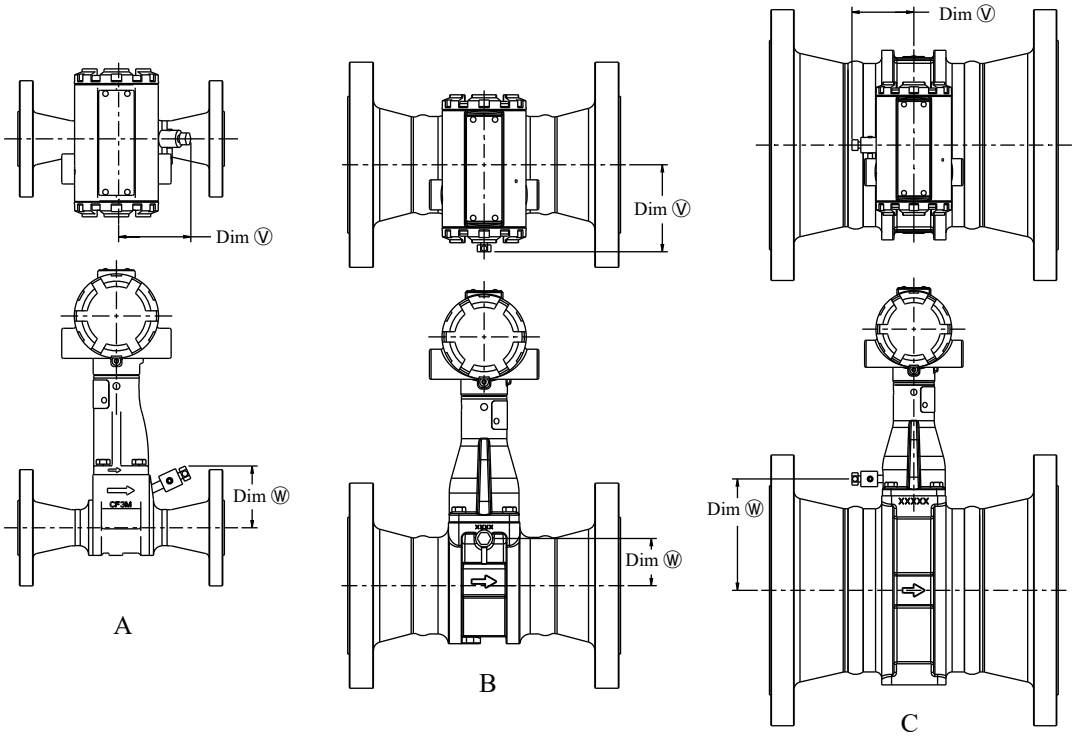

A. 1–1½ inch (DN25–DN40) models and 1½–2 inch (DN40-DN50) reducer flange models
B. 2–4 inch (DN50-DN100) models and 3–6 inch (DN80-DN150) reducer flange models
C. 6+ inch (DN150+) models and 8+ inch (DN200) reducer flange models

Note
Dimensions Ⓥ and Ⓦ are measured from the center of the meter or process pipe, and they are the same for all process fitting types.

Table 52: Location for CPA valve option

Meter size	Dim Ⓥ inch (mm)	Dim Ⓦ inch (mm)
1 inch (DN25) (and 1½ inch [DN40] reducer)	2.7 (70)	2.3 (57)
1½ inch (DN40) (and 2 inch [DN50] reducer)	2.6 (66)	2.6 (66)
2 inch (DN50) (and 3 inch [DN80] reducer)	3.2 (81)	1.1 (28)
3 inch (DN80) (and 4 inch [DN100] reducer)	3.2 (81)	1.7 (44)
4 inch (DN100) (and 6 inch [DN150] reducer)	3.2 (81)	2.3 (57)
6 inch (DN150) (and 8 inch [DN200] reducer)	2.5 (64)	4.5 (115)
8 inch (DN200) (and 10 inch [DN250] reducer)	2.5 (64)	5.6 (141)
10 inch (DN250) (and 12 inch [DN300 reducer)	2.5 (64)	6.6 (167)
12 inch (DN300) (and 14 inch [DN350] reducer)	2.5 (64)	7.5 (190)

Dual transmitter dimensions

Figure 13: Vortex Dual-Sensor Style Flowmeter (1/2- through 4-in./15 mm through 100 mm Line Sizes)

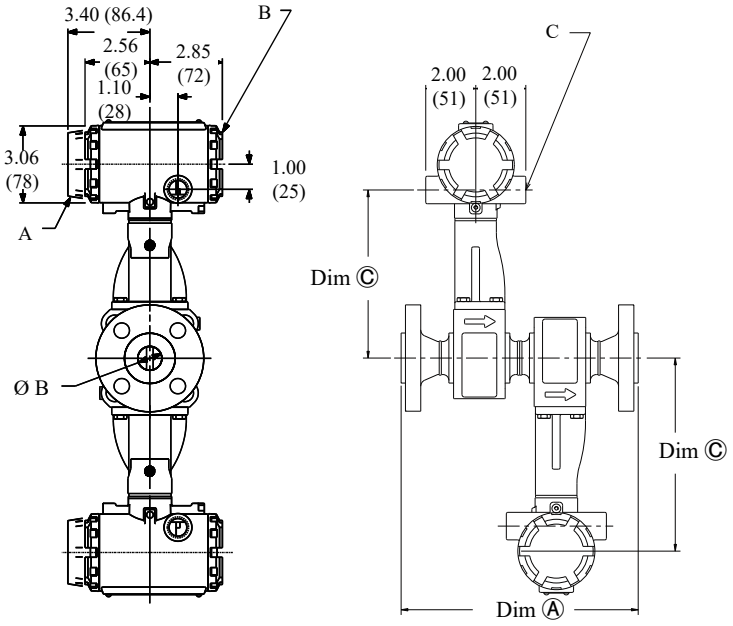

A. Display option
B. Terminal cover
C. Electrical connection

Note
For Dim Ⓐ, ØⒷ, and Dim Ⓒ, see Table 53 and Table 54 for dimensions.

Figure 14: Vortex Dual-Sensor Style Flowmeter (6- through 12-in./150 mm through 300 mm Line Sizes)

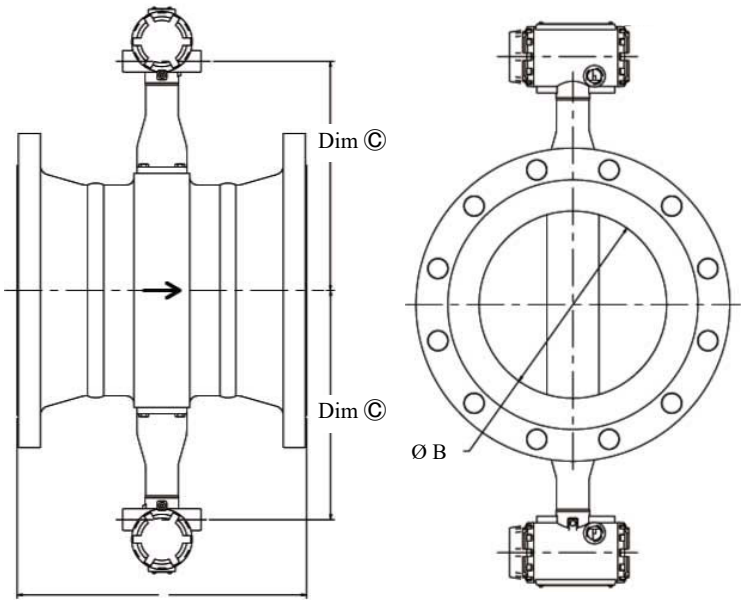

Note
For ØⒷ and Dim Ⓒ, see Table 53 and Table 54 for dimensions.

Table 53: Vortex Dual-Sensor Style Flowmeter (1/2- through 4-in./15 mm through 100 mm Line Sizes)

Nominal size inch (mm)	Flange rating	Face-to-face Dim Ⓐ inch (mm)	Dim Ⓐ RTJ inch (mm)	ØⒷ inch (mm)	Dim Ⓒ inch (mm)	Weight lb (kg)
½ (15)	Class 150	11.9 (302)	N/A	0.54 (13,7)	7.6 (193)	16 (7)
	Class 300	12.3 (312)	12.6 (320)	0.54 (13,7)	7.6 (193)	17 (8)
	Class 600	12.8 (325)	12.7 (323)	0.54 (13,7)	7.6 (193)	18 (8)
	Class 900	13.4 (340)	13.4 (340)	0.54 (13,7)	7.6 (193)	23 (10)
	PN 16/40	11.2 (284)	N/A	0.54 (13,7)	7.6 (193)	17 (8)
	PN 100	11.7 (297)	N/A	0.54 (13,7)	7.6 (193)	19 (9)
	JIS 10K/20K	11.4 (290)	N/A	0.54 (13,7)	7.6 (193)	17 (8)
	JIS 40K	12.4 (315)	N/A	0.54 (13,7)	7.6 (193)	21 (9)
1 (25)	Class 150	15.0 (381)	15.4 (391)	0.95 (24,1)	7.7 (196)	21 (9)
	Class 300	15.6 (396)	15.9 (404)	0.95 (24,1)	7.7 (196)	23 (11)
	Class 600	16.1 (409)	16.1 (409)	0.95 (24,1)	7.7 (196)	24 (11)
	Class 900	16.9 (429)	16.9 (429)	0.95 (24,1)	7.7 (196)	33 (15)
	Class 1500	16.9 (429)	16.9 (429)	0.95 (24,1)	7.7 (196)	33 (15)
	PN 16/40	13.8 (351)	N/A	0.95 (24,1)	7.7 (196)	22 (10)
	PN 100	15.3 (389)	N/A	0.95 (24,1)	7.7 (196)	28 (13)
	PN 160	15.3 (389)	N/A	0.95 (24,1)	7.7 (196)	28 (13)
	JIS 10K/20K	14.0 (356)	N/A	0.95 (24,1)	7.7 (196)	22 (10)
	JIS 40K	15.4 (391	N/A	0.95 (24,1)	7.7 (196)	26 (12)
1½ (40)	Class 150	11.3 (287)	11.7 (297)	1.49 (37,8)	8.1 (206)	27 (12)
	Class 300	11.8 (300)	12.2 (310)	1.49 (37,8)	8.1 (206)	32 (15)
	Class 600	12.4 (315)	12.4 (315)	1.49 (37,8)	8.1 (206)	35 (16)
	Class 900	13.4 (340)	13.4 (340)	1.49 (37,8)	8.1 (206)	46 (21)
	Class 1500	13.4 (340)	13.4 (340)	1.49 (37,8)	8.1 (206)	46 (21)
	PN 16/40	9.9 (251)	N/A	1.49 (37,8)	8.1 (206)	29 (13)
	PN 100	11.3 (287)	N/A	1.49 (37,8)	8.1 (206)	37 (17)
	PN 160	11.4 (290)	N/A	1.49 (37,8)	8.1 (206)	39 (18)
	JIS 10K/20K	10.3 (262)	N/A	1.49 (37,8)	8.1 (206)	28 (13)
	JIS 40K	11.5 (292)	N/A	1.49 (37,8)	8.1 (206)	35 (16)
2 (50)	Class 150	13.0 (330)	13.4 (340)	1.92 (48,8)	8.5 (216)	32 (15)
	Class 300	13.5 (343)	14.0 (356)	1.92 (48,8)	8.5 (216)	36 (16)
	Class 600	14.3 (363)	14.4 (366)	1.92 (48,8)	8.5 (216)	39 (18)
	Class 900	16.5 (419)	16.7 (424)	1.92 (48,8)	8.5 (216)	69 (31)
	Class 1500	16.3 (414)	16.5 (419)	1.67 (42.4)	8.5 (216)	72 (33)
	PN 16/40	11.8 (300)	N/A	1.92 (48,8)	8.5 (216)	33 (15)
	PN 63/64	12.9 (328)	N/A	1.92 (48,8)	8.5 (216)	40 (18)
	PN 100	13.4 (340)	N/A	1.92 (48,8)	8.5 (216)	46 (21)
	PN 160	13.9 (353)	N/A	1.92 (48,8)	8.5 (216)	48 (22)
	JIS 10K	11.5 (292)	N/A	1.92 (48,8)	8.5 (216)	29 (13)
	JIS 20K	12.0 (305)	N/A	1.92 (48,8)	8.5 (216)	30 (14)
	JIS 40K	13.6 (345)	N/A	1.92 (48,8)	8.5 (216)	38 (14)
3 (80)	Class 150	14.3 (363)	14.7 (373)	2.87 (72,9)	9.1 (231)	51 (23)
	Class 300	15.0 (381)	15.5 (394)	2.87 (72,9)	9.1 (231)	60 (27)
	Class 600	15.8 (401)	15.9 (404)	2.87 (72,9)	9.1 (231)	66 (30)
	Class 900	17.3 (439)	17.4 (442)	2.87 (72,9)	9.1 (231)	88 (41)
	Class 1500	18.5 (470)	18.7 (475)	2.60 (66.0)	9.1 (232)	124 (56)

Table 53: Vortex Dual-Sensor Style Flowmeter (1/2- through 4-in./15 mm through 100 mm Line Sizes) *(continued)*

Nominal size inch (mm)	Flange rating	Face-to-face Dim Ⓐ inch (mm)	Dim Ⓐ RTJ inch (mm)	ØⒷ inch (mm)	Dim Ⓒ inch (mm)	Weight lb (kg)
	PN 16/40	13.4 (340)	N/A	2.87 (72,9)	9.1 (231)	50 (23)
	PN 63/64	14.5 (367)	N/AN/A	2.87 (72,9)	9.1 (231)	59 (27)
	PN 100	14.9 (378)	N/A	2.87 (72,9)	9.1 (231)	68 (31)
	PN 160	15.6 (396)	N/A	2.87 (72,9)	9.1 (231)	73 (33)
	JIS 10K	12.3 (312)	N/A	2.87 (72,9)	9.1 (231)	41 (19)
	JIS 20K	13.7 (348)	N/A	2.87 (72,9)	9.1 (231)	49 (22)
	JIS 40K	15.5 (394)	N/A	2.87 (72,9)	9.1 (231)	64 (29)
4 (100)	Class 150	15.2 (386)	15.6 (396)	3.79 (96,3)	9.6 (244)	70 (32)
	Class 300	16.0 (406)	16.5 (419)	3.79 (96,3)	9.6 (244)	89 (41)
	Class 600	17.7 (450)	17.9 (455)	3.79 (96,3)	9.6 (244)	116 (53)
	Class 900	18.7 (475)	18.9 (480)	3.79 (96,3)	9.6 (244)	139 (63)
	Class 1500	20.0 (509)	20.2 (513)	3.40 (86.4)	9.6 (244)	184 (83)
	PN 16	13.3 (338)	N/A	3.79 (96,3)	9.6 (244)	59 (27)
	PN 40	14.4 (366)	N/A	3.79 (96,3)	9.6 (244)	68 (31)
	PN 63/64	15.4 (391)	N/A	3.79 (96,3)	9.6 (244)	81 (37)
	PN 100	16.3 (414)	N/A	3.79 (96,3)	9.6 (244)	97 (44)
	PN 160	17.1 (434)	N/A	3.79 (96,3)	9.6 (244)	104 (47)
	JIS 10K	13.6 (345)	N/A	3.79 (96,3)	9.6 (244)	56 (25)
	JIS 20K	13.6 (345)	N/A	3.79 (96,3)	9.6 (244)	64 (29)
	JIS 40K	16.8 (427)	N/A	3.79 (96,3)	9.6 (244)	94 (43)

Table 54: Vortex Dual-Sensor Style Flowmeter (6- through 12-in./150 mm through 300 mm Line Sizes)

Nominal size inch (mm)	Flange rating	Face-to-face Dim Ⓐ inch (mm)	Dim Ⓐ RTJ inch (mm)	ØB inch (mm)	Dim Ⓒ inch (mm)	Weight lb (kg)
6 (150)	Class 150	11.6 (295)	12.0 (305)	5.7 (144,8)	10.8 (274)	85 (39)
	Class 300	12.3 (312)	12.8 (325)	5.7 (144,8)	10.8 (274)	124 (57)
	Class 600	14.3 (363)	14.4 (366)	5.7 (144,8)	10.8 (274)	191 (87)
	Class 900	16.1 (409)	16.2 (411)	5.14 (130.6)	10.8 (274)	282 (128)
	Class 1500	18.6 (472)	18.8 (478)	5.14 (130.6)	10.8 (274)	380 (173)
	PN 16	8.9 (226)	N/A	5.7 (144,8)	10.8 (274)	70 (32)
	PN 40	10.5 (267)	N/A	5.7 (144,8)	10.8 (274)	90 (41)
	PN 63/64	12.1 (307)	N/A	5.7 (144,8)	10.8 (274)	134 (61)
	PN 100	13.6 (345)	N/A	5.7 (144,8)	10.8 (274)	164 (75)
	JIS 10K	10.6 (269)	N/A	5.7 (144,8)	10.8 (274)	74 (34)
	JIS 20K	10.6 (269)	N/A	5.7 (144,8)	10.8 (274)	92 (42)
	JIS 40K	14.2 (361)	N/A	5.7 (144,8)	10.8 (274)	170 (77)
8 (200)	Class 150	13.5 (343)	13.9 (353)	7.55 (191,8)	11.7 (297)	146 (66)
	Class 300	14.3 (363)	14.8 (376)	7.55 (191,8)	11.7 (297)	203 (92)
	Class 600	16.5 (419)	16.7 (424)	7.55 (191,8)	11.7 (297)	303 (138)
	Class 900	18.8 (478)	18.9 (480)	6.62 (168,1)	11.7 (297)	484 (220)
	Class 1500	22.8 (580)	23.2 (589)	6.62 (168,1)	11.7 (297)	657 (299)

Table 54: Vortex Dual-Sensor Style Flowmeter (6- through 12-in./150 mm through 300 mm Line Sizes) *(continued)*

Nominal size inch (mm)	Flange rating	Face-to-face Dim Ⓐ inch (mm)	Dim Ⓐ RTJ inch (mm)	ØB inch (mm)	Dim Ⓒ inch (mm)	Weight lb (kg)
	PN 10	10.4 (264)	N/A	7.55 (191,8)	11.7 (297)	115 (52)
	PN 16	10.4 (264)	N/A	7.55 (191,8)	11.7 (297)	114 (52)
	PN 25	11.8 (300)	N/A	7.55 (191,8)	11.7 (297)	142 (65)
	PN 40	12.5 (318)	N/A	7.55 (191,8)	11.7 (297)	161 (73)
	PN 63/64	14.2 (361)	N/A	7.55 (191,8)	11.7 (297)	221 (101)
	PN 100	15.8 (401)	N/A	7.55 (191,8)	11.7 (297)	287 (130)
	JIS 10K	12.2 (310)	N/A	7.55 (191,8)	11.7 (297)	114 (52)
	JIS 20K	12.2 (310)	N/A	7.55 (191,8)	11.7 (297)	139 (63)
	JIS 40K	16.5 (419)	N/A	7.55 (191,8)	11.7 (297)	260 (118)
10 (250)	Class 150	14.5 (368)	14.9 (378)	9.56 (243)	12.8 (325)	202 (92)
	Class 300	15.8 (401)	16.3 (414)	9.56 (243)	12.8 (325)	290 (132)
	Class 600	19.0 (483)	19.2 (488)	9.56 (243)	12.8 (325)	482 (219)
	PN 10	11.9 (302)	N/A	9.56 (243)	12.8 (325)	161 (73)
	PN 16	12.0 (305)	N/A	9.56 (243)	12.8 (325)	166 (75)
	PN 25	13.5 (343)	N/A	9.56 (243)	12.8 (325)	203 (92)
	PN 40	14.8 (376)	N/A	9.56 (243)	12.8 (325)	251 (114)
	PN 63/64	16.4 (417)	N/A	9.56 (243)	12.8 (325)	312 (142)
	PN 100	18.9 (480)	N/A	9.56 (243)	12.8 (325)	450 (204)
	JIS 10K	14.5 (368)	N/A	9.56 (243)	12.8 (325)	179 (81)
	JIS 20K	14.5 (368)	N/A	9.56 (243)	12.8 (325)	226 (103)
	JIS 40K	18.1 (460)	N/A	9.56 (243)	12.8 (325)	383 (174)
12 (300)	Class 150	16.8 (427)	17.1 (434)	11.38 (289)	13.7 (348)	302 (137)
	Class 300	18.0 (457)	18.5 (470)	11.38 (289)	13.7 (348)	420 (191)
	Class 600	20.5 (521)	20.6 (523)	11.38 (289)	13.7 (348)	600 (272)
	PN 10	13.1 (331)	N/A	11.38 (289)	13.7 (348)	208 (95)
	PN 16	13.9 (353)	N/A	11.38 (289)	13.7 (348)	229 (104)
	PN 25	15.0 (381)	N/A	11.38 (289)	13.7 (348)	274 (124)
	PN 40	16.8 (427)	N/A	11.38 (289)	13.7 (348)	352 (160)
	PN 63/64	18.8 (478)	N/A	11.38 (289)	13.7 (348)	435 (198)
	PN 100	21.2 (538)	N/A	11.38 (289)	13.7 (348)	648 (294)
	JIS 10K	15.7 (399)	N/A	11.38 (289)	13.7 (348)	227 (103)
	JIS 20K	15.7 (399)	N/A	11.38 (289)	13.7 (348)	288 (131)
	JIS 40K	19.6 (498)	N/A	11.38 (289)	13.7 (348)	498 (226)

Figure 15: Dual Sensor Flanged-Style Remote Mount Flowmeters (1/2- through 12-inch/15 mm through 300 mm Line Sizes)

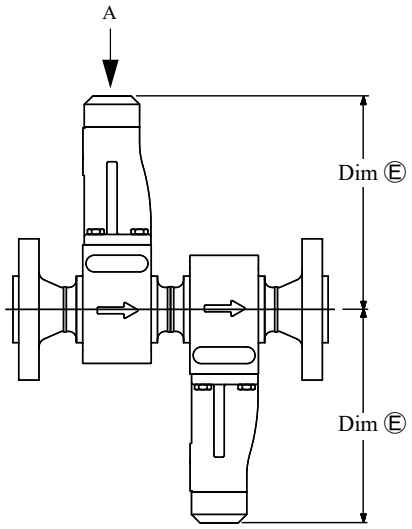

A. ½–14 NPT (for remote cable conduit)

Note
For Dim Ⓔ, see Table 55.

Table 55: Remote Mount Flanged, Dual Sensor Flowmeter Dimensions

Nominal size inch (mm)	Dim Ⓔ inch (mm)
1/2 (15)	6.4 (162)
1 (25)	6.5 (165)
11/2 (40)	6.8 (173)
2 (50)	7.2 (183)
3 (80)	7.8 (198)
4 (100)	8.3 (211)
6 (150)	9.5 (241)
8 (200)	10.4 (264)
10 (250)	11.4 (290)
12 (300)	12.3 (313)

Location for CPA valve option

When the CPA option is ordered, the CPA valve can be in one of three general locations depending on the size of the meter.

Note
On some models, the orientation or relative location of the CPA valve may vary. Contact an Emerson representative for more precise information if needed.

Figure 16: Location for CPA valve option

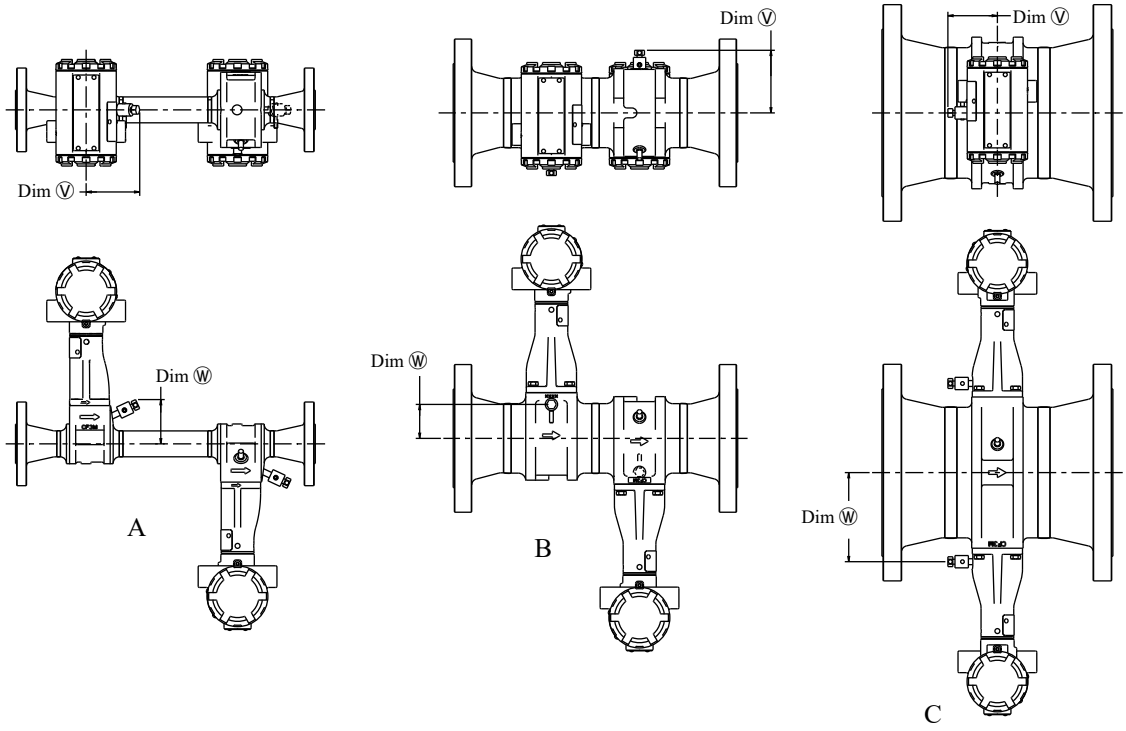

A. 1–1½ inch (DN25–DN40) models
B. 2–4 inch (DN50-DN100) models
C. 6+ inch (DN150+) models

Note
Dimensions Ⓥ and Ⓦ are measured from the center of the meter or process pipe, and they are the same for all process fitting types.

Table 56: Location for CPA valve option

Meter size	Dim Ⓥ inch (mm)	Dim Ⓦ inch (mm)
1 inch (DN25)	2.7 (70)	2.3 (57)
1½ inch (DN40)	2.6 (66)	2.6 (66)
2 inch (DN50)	3.2 (81)	1.1 (28)
3 inch (DN80)	3.2 (81)	1.7 (44)
4 inch (DN100)	3.2 (81)	2.3 (57)
6 inch (DN150)	2.5 (64)	4.5 (115)
8 inch (DN200)	2.5 (64)	5.6 (141)
10 inch (DN250)	2.5 (64)	6.6 (167)
12 inch (DN300)	2.5 (64)	7.5 (190)

Quad transmitter dimensions

Figure 17: Vortex quad sensor for remote transmitters, all line sizes

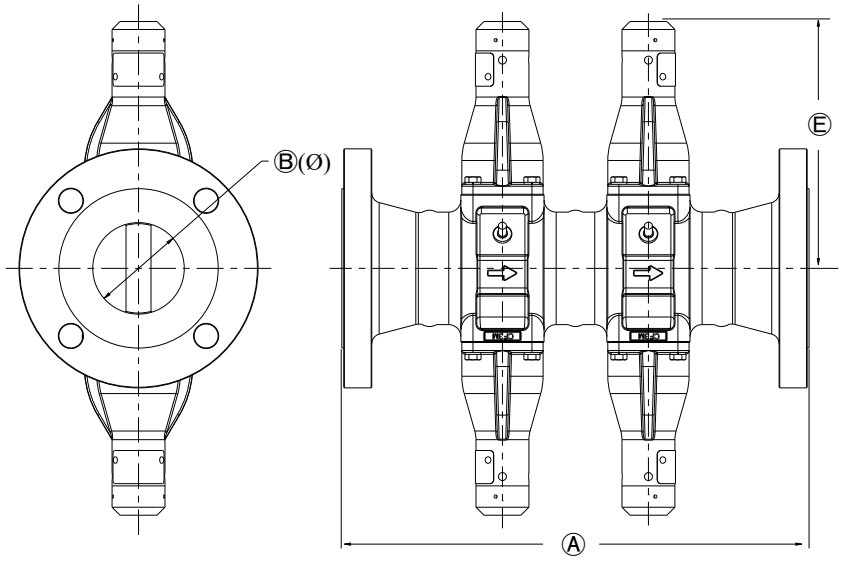

A. Face-to-face dimension Ⓐ
B. Inside diameter ØⒷ
C. Center-to-top/bottom dimension Ⓔ

Note
For product weight and dimensions, see Table 57.

Figure 18: Vortex integral quad meters, 6 inch through 12 inch (150 mm through 300 mm) line sizes

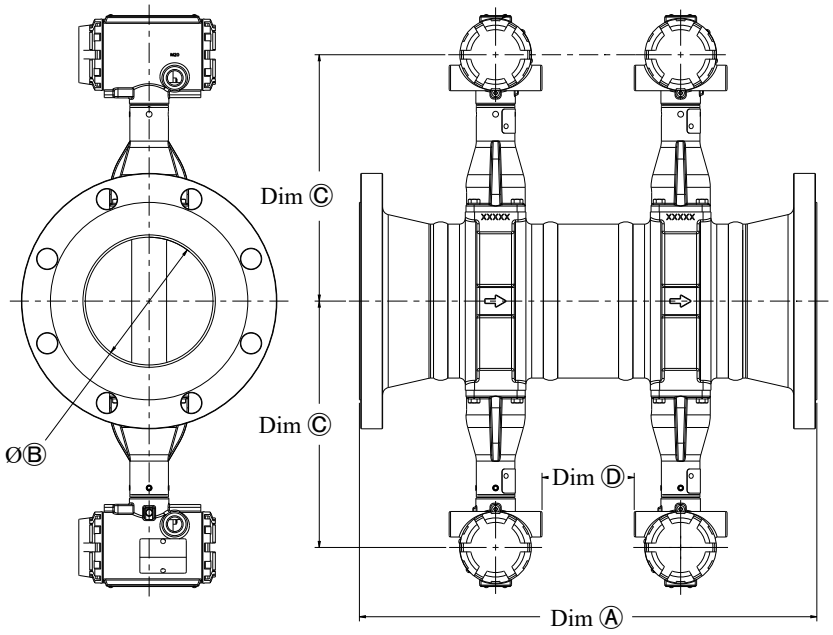

Note
For product weight and Dims Ⓐ, ØⒷ, Ⓒ, and Ⓓ, see Table 57.

Note
For 4 inch (DN100) and smaller meters, weights do not include the remote transmitter. For 6 inch (DN150) and larger meters, weights include integral transmitters. To determine the weight for 6 inch (DN150) and larger meters without integral transmitters, subtract a total of 10 lb (4.6 kg).

Table 57: Vortex quad sensor flow meter for integral or remote transmitters, dimensions for 2 inch to 12 inch (50 mm through 300 mm) line sizes

Nominal size, inch (mm)	Flange rating	Face-to-face Dim Ⓐ, inch (mm)		ØⒷ, inch (mm)	Dim Ⓒ, inch (mm)	Dim Ⓓ, inch (mm)	Dim Ⓔ, inch (mm)	Weight, lb (kg)
		Flanged	RTJ					
2 inch (DN50)	150	12.6 (320)	12.9 (328)	1.9 (49)	-	-	7.2 (183)	31 (14)
	300	13.1 (333)	13.6 (345)	1.9 (49)	-	-	7.2 (183)	35 (16)
	600	13.8 (351)	13.9 (353)	1.9 (49)	-	-	7.2 (183)	39 (18)
	900	16.1 (409)	16.2 (411)	1.9 (49)	-	-	7.2 (183)	68 (31)
	1500	15.6 (396)	15.7 (399)	1.7 (42)	-	-	7.2 (183)	72 (33)
	PN16	11.1 (282)	-	1.9 (49)	-	-	7.2 (183)	31 (14)
	PN40	11.3 (287)	-	1.9 (49)	-	-	7.2 (183)	32 (14)
	PN63	12.4 (315)	-	1.9 (49)	-	-	7.2 (183)	40 (18)
	PN100	12.9 (328)	-	1.9 (49)	-	-	7.2 (183)	45 (20)
	PN160	13.5 (343)	-	1.9 (49)	-	-	7.2 (183)	48 (22)
	JIS 10K	11 (279)	-	1.9 (49)	-	-	7.2 (183)	31 (14)
	JIS 20K	11.6 (295)	-	1.9 (49)	-	-	7.2 (183)	35 (16)
	JIS 40K	13.1 (333)	-	1.9 (49)	-	-	7.2 (183)	39 (18)

Table 57: Vortex quad sensor flow meter for integral or remote transmitters, dimensions for 2 inch to 12 inch (50 mm through 300 mm) line sizes *(continued)*

Nominal size, inch (mm)	Flange rating	Face-to-face Dim Ⓐ, inch (mm)		ØⒷ, inch (mm)	Dim Ⓒ, inch (mm)	Dim Ⓓ, inch (mm)	Dim Ⓔ, inch (mm)	Weight, lb (kg)
		Flanged	RTJ					
3 inch (DN80)	150	14.3 (363)	14.7 (373)	2.9 (73)	-	-	7.8 (198)	50 (23)
	300	15 (381)	15.5 (394)	2.9 (73)	-	-	7.8 (198)	59 (27)
	600	15.8 (401)	15.9 (404)	2.9 (73)	-	-	7.8 (198)	66 (30)
	900	17.3 (439)	17.4 (442)	2.9 (73)	-	-	7.8 (198)	89 (40)
	1500	18.4 (467)	18.6 (472)	2.6 (66)	-	-	7.8 (198)	122 (56)
	PN 16	12.7 (323)	-	2.9 (73)	-	-	7.8 (198)	46 (21)
	PN 40	13.4 (340)	-	2.9 (73)	-	-	7.8 (198)	50 (23)
	PN 63	14.5 (368)	-	2.9 (73)	-	-	7.8 (198)	59 (27)
	PN100	14.9 (378)	-	2.9 (73)	-	-	7.8 (198)	68 (31)
	PN160	15.6 (396)	-	2.9 (73)	-	-	7.8 (198)	73 (33)
	JIS 10K	12.3 (312)	-	2.9 (73)	-	-	7.8 (198)	50 (23)
	JIS 20K	13.7 (348)	-	2.9 (73)	-	-	7.8 (198)	59 (27)
	JIS 40K	15.4 (391)	-	2.9 (73)	-	-	7.8 (198)	66 (30)
4 inch (DN100)	150	15.3 (389)	15.6 (396)	3.8 (96)	-	-	8.3 (211)	70 (32)
	300	16 (406)	16.5 (419)	3.8 (96)	-	-	8.3 (211)	90 (41)
	600	17.8 (452)	17.9 (455)	3.8 (96)	-	-	8.3 (211)	116 (53)
	900	18.8 (478)	18.9 (480)	3.8 (96)	-	-	8.3 (211)	139 (63)
	1500	20.0 (508)	20.1 (511)	3.4 (86)	-	-	8.3 (211)	188 (86)
	PN16	13.4 (340)	-	3.8 (96)	-	-	8.3 (211)	60 (27)
	PN40	14.4 (366)	-	3.8 (96)	-	-	8.3 (211)	69 (31)
	PN63	15.4 (391)	-	3.8 (96)	-	-	8.3 (211)	82 (37)
	PN100	16.3 (414)	-	3.8 (96)	-	-	8.3 (211)	99 (45)
	PN160	17.1 (434)	-	3.8 (96)	-	-	8.3 (211)	106 (48)
	JIS 10K	13.7 (348)	-	3.8 (96)	-	-	8.3 (211)	70 (32)
	JIS 20K	13.7 (348)	-	3.8 (96)	-	-	8.3 (211)	90 (41)
	JIS 40K	16.8 (427)	-	3.8 (96)	-	-	8.3 (211)	116 (53)
6 inch (DN150)	150	19.3 (490)	19.6 (498)	5.7 (145)	10.8 (274)	3.8 (95)	9.5 (241)	128 (58)
	300	20.0 (508)	20.5 (521)	5.7 (145)	10.8 (274)	3.8 (95)	9.5 (241)	168 (76)
	600	22.0 (559)	22.1 (561)	5.7 (145)	10.8 (274)	3.8 (95)	9.5 (241)	234 (106)
	900	23.3 (592)	23.5 (597)	5.1 (131)	10.8 (274)	3.8 (95)	9.5 (241)	333 (151)
	1500	25.8 (663)	26.1 (663)	5.1 (131)	10.8 (274)	3.4 (86)	9.5 (241)	432 (196)
	PN16	16.6 (422)	-	5.7 (145)	10.8 (274)	3.8 (95)	9.5 (241)	114 (52)
	PN40	18.2 (462)	-	5.7 (145)	10.8 (274)	3.8 (95)	9.5 (241)	134 (61)
	PN63	19.7 (500)	-	5.7 (145)	10.8 (274)	3.8 (95)	9.5 (241)	178 (81)
	PN100	21.3 (541)	-	5.7 (145)	10.8 (274)	3.8 (95)	9.5 (241)	208 (94)
	PN160	21.9 (556)	-	5.1 (131)	10.8 (274)	3.4 (86)	9.5 (241)	270 (123)

Table 57: Vortex quad sensor flow meter for integral or remote transmitters, dimensions for 2 inch to 12 inch (50 mm through 300 mm) line sizes *(continued)*

Nominal size, inch (mm)	Flange rating	Face-to-face Dim Ⓐ, inch (mm)		ØⒷ, inch (mm)	Dim Ⓒ, inch (mm)	Dim Ⓓ, inch (mm)	Dim Ⓔ, inch (mm)	Weight, lb (kg)
		Flanged	RTJ					
	JIS10K	18.3 (465)	-	5.7 (145)	10.8 (274)	3.8 (95)	9.5 (241)	128 (58)
	JIS20K	18.3 (465)	-	5.7 (145)	10.8 (274)	3.8 (95)	9.5 (241)	168 (76)
	JIS40K	21.8 (554)	-	5.7 (145)	10.8 (274)	3.8 (95)	9.5 (241)	234 (106)
8 inch (DN200)	150	23.9 (607)	24.3 (617)	7.6 (192)	11.7 (297)	6.4 (126)	10.4 (264)	207 (94)
	300	24.6 (625)	25.1 (638)	7.6 (192)	11.7 (297)	6.4 (126)	10.4 (264)	264 (120)
	600	26.9 (683)	27.0 (686)	7.6 (192)	11.7 (297)	6.4 (126)	10.4 (264)	363 (165)
	900	27.6 (701)	27.8 (706)	6.6 (168)	11.7 (297)	5.0 (126)	10.4 (264)	590 (268)
	1500	31.6 (829)	32.0 (813)	6.6 (168)	11.7 (297)	5.0 (126)	10.4 (264)	763 (346)
	PN10	20.8 (528)	-	7.6 (192)	11.7 (297)	6.4 (126)	10.4 (264)	177 (80)
	PN16	20.8 (528)	-	7.6 (192)	11.7 (297)	6.4 (126)	10.4 (264)	176 (80)
	PN25	22.2 (564)	-	7.6 (192)	11.7 (297)	6.4 (126)	10.4 (264)	205 (93)
	PN40	22.8 (579)	-	7.6 (192)	11.7 (297)	6.4 (126)	10.4 (264)	223 (101)
	PN63	24.5 (623)	-	7.6 (192)	11.7 (297)	6.4 (126)	10.4 (264)	284 (129)
	PN100	26.1 (663)	-	7.6 (192)	11.7 (297)	6.4 (126)	10.4 (264)	350 (159)
	PN160	25.4 (645)	-	6.6 (168)	11.7 (297)	5.0 (126)	10.4 (264)	491 (223)
	JIS10K	22.5 (572)	-	7.6 (192)	11.7 (297)	6.4 (126)	10.4 (264)	207 (94)
	JIS20K	22.5 (572)	-	7.6 (192)	11.7 (297)	6.4 (126)	10.4 (264)	264 (120)
	JIS40K	26.8 (682)	-	7.6 (192)	11.7 (297)	6.4 (126)	10.4 (264)	363 (165)
10 inch (DN250)	150	27.9 (709)	28.3 (719)	9.6 (243)	12.8 (325)	9.4 (239)	11.5 (292)	309 (140)
	300	29.1 (739)	29.6 (752)	9.6 (243)	12.8 (325)	9.4 (239)	11.5 (292)	270 (123)
	600	32.4 (823)	32.5 (826)	9.6 (243)	12.8 (325)	9.4 (239)	11.5 (292)	588 (267)
	PN10	25.2 (640)	-	9.6 (243)	12.8 (325)	9.4 (239)	11.5 (292)	270 (123)
	PN16	25.4 (645)	-	9.6 (243)	12.8 (325)	9.4 (239)	11.5 (292)	275 (125)
	PN25	26.8 (681)	-	9.6 (243)	12.8 (325)	9.4 (239)	11.5 (292)	311 (141)
	PN40	28 (714)	-	9.6 (243)	12.8 (325)	9.4 (239)	11.5 (292)	360 (163)
	PN63	29.7 (754)	-	9.6 (243)	12.8 (325)	9.4 (239)	11.5 (292)	421 (191)
	PN100	32.2 (818)	-	9.6 (243)	12.8 (325)	9.4 (239)	11.5 (292)	558 (253)
	JIS10K	27.9 (709)	-	9.6 (243)	12.8 (325)	9.4 (239)	11.5 (292)	309 (140)
	JIS20K	27.9 (709)	-	9.6 (243)	12.8 (325)	9.4 (239)	11.5 (292)	397 (180)
	JIS40K	31.4 (798)	-	9.6 (243)	12.8 (325)	9.4 (239)	11.5 (292)	588 (267)
12 inch (DN300)	150	31.9 (810)	32.3 (820)	11.4 (289)	13.7 (348)	11.2 (284)	12.4 (315)	467 (212)
	300	33.1 (841)	33.6 (853)	11.4 (289)	13.7 (348)	11.2 (284)	12.4 (315)	585 (265)
	600	35.6 (904)	35.7 (907)	11.4 (289)	13.7 (348)	11.2 (284)	12.4 (315)	764 (347)
	PN10	28.2 (716)		11.4 (289)	13.7 (348)	11.2 (284)	12.4 (315)	377 (171)
	PN16	29.0 (737)	-	11.4 (289)	13.7 (348)	11.2 (284)	12.4 (315)	398 (181)
	PN25	30.1 (765)		11.4 (289)	13.7 (348)	11.2 (284)	12.4 (315)	443 (201)

Table 57: Vortex quad sensor flow meter for integral or remote transmitters, dimensions for 2 inch to 12 inch (50 mm through 300 mm) line sizes *(continued)*

Nominal size, inch (mm)	Flange rating	Face-to-face Dim Ⓐ, inch (mm)		ØⒷ, inch (mm)	Dim Ⓒ, inch (mm)	Dim Ⓓ, inch (mm)	Dim Ⓔ, inch (mm)	Weight, lb (kg)
		Flanged	RTJ					
	PN40	31.9 (810)	-	11.4 (289)	13.7 (348)	11.2 (284)	12.4 (315)	521 (236)
	PN63	33.9 (861)	-	11.4 (289)	13.7 (348)	11.2 (284)	12.4 (315)	604 (274)
	PN100	36.3 (922)	-	11.4 (289)	13.7 (348)	11.2 (284)	12.4 (315)	817 (371)
	JIS10K	30.8 (782)	-	11.4 (289)	13.7 (348)	11.2 (284)	12.4 (315)	467 (212)
	JIS20K	30.8 (782)	-	11.4 (289)	13.7 (348)	11.2 (284)	12.4 (315)	585 (265)
	JIS40K	34.8 (884)	-	11.4 (289)	13.7 (348)	11.2 (284)	12.4 (315)	764 (347)

Figure 19: Vortex quad meters with CPA option

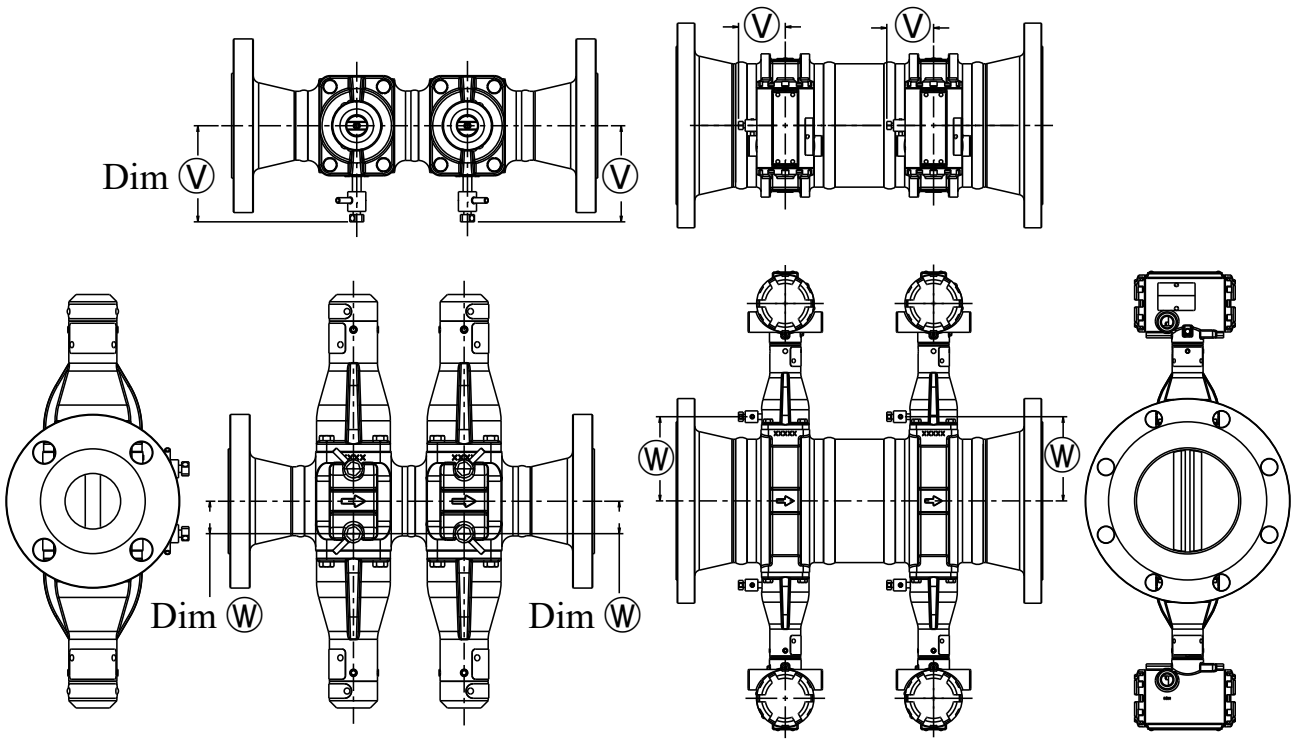

Note
For Dim ⓥ and Dim ⓦ, see Table 58.

Table 58: Vortex integral quad meters dimensions for CPA fitting

Nominal size, inch (mm)	Pipe center to CPA fitting, Dim ⓥ, inch (mm)	Pipe center to CPA fitting, Dim ⓦ, inch (mm)
2 inch (DN50)	3.2 (81)	1.1 (28)
3 inch (DN80)	3.2 (81)	1.7 (43)
4 inch (DN100)	3.2 (81)	2.3 (58)

Table 58: Vortex integral quad meters dimensions for CPA fitting *(continued)*

Nominal size, inch (mm)	Pipe center to CPA fitting, Dim ⓥ, inch (mm)	Pipe center to CPA fitting, Dim ⓦ, inch (mm)
6 inch (DN150)	2.5 (64)	4.5 (114)
8 inch (DN200)	2.5 (64)	5.6 (142)
10 inch (DN250)	2.5 (64)	6.6 (168)
12 inch (DN300)	2.5 (64)	7.5 (191)

Remote transmitter dimensions

Figure 20: Remote mount transmitters

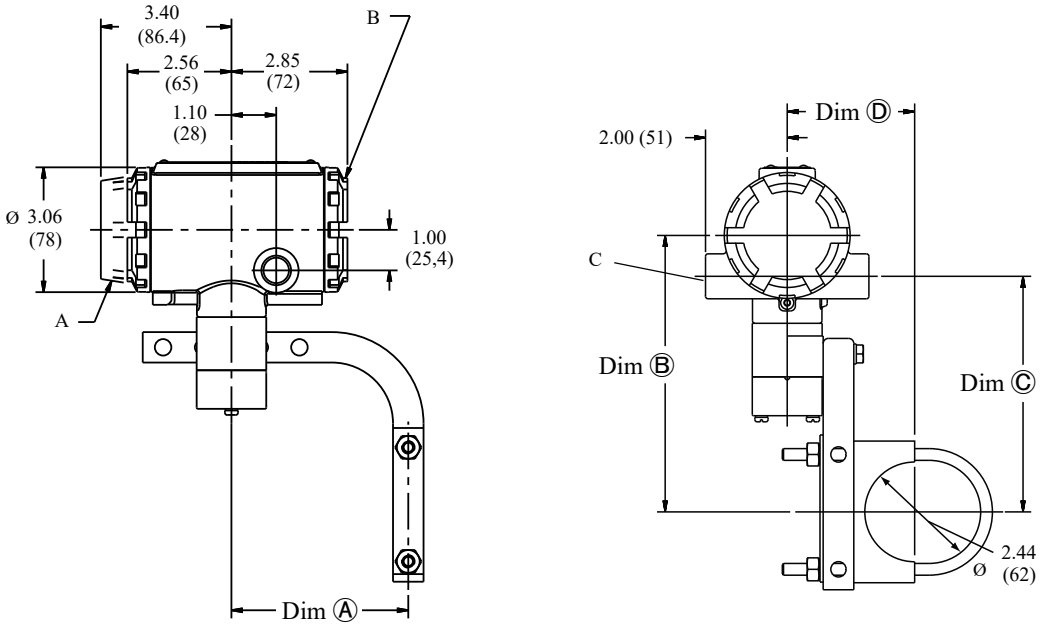

A. Display option
B. Terminal cover
C. ½–14 NPT (for remote cable conduit)

Note
Dims Ⓐ, Ⓑ, Ⓒ, and Ⓓ vary by housing material. See Table 59.

Table 59: Dimensions by transmitter housing material

Material	Dim Ⓐ inch (mm)	Dim Ⓑ inch (mm)	Dim Ⓒ inch (mm)	Dim Ⓓ inch (mm)
Aluminum	4.4 (110)	6.8 (172)	5.8 (147)	3.1 (79)
Stainless Steel	4.5 (114)	6.9 (175)	5.9 (150)	3.4 (86)

00813-0100-4004
Rev. KK
November 2024

For more information: **Emerson.com/global**

©2024 Emerson. All rights reserved.

Emerson Terms and Conditions of Sale are available upon request. The Emerson logo is a trademark and service mark of Emerson Electric Co. Rosemount is a mark of one of the Emerson family of companies. All other marks are the property of their respective owners.

ROSEMOUNT™

EMERSON™