Reprint 9/19/94

HAGAN
POWER POSITIONER
TORQUE TYPE 4 x 5

Instruction Bulletin IB-102-204 Rev. 1
Supercedes IB-102-204 dated October, 1993

ROSEMOUNT® ANALYTICAL

FISHER-ROSEMOUNT™ Managing The Process Better.

12/92

ROSEMOUNT WARRANTY

Rosemount warrants that the equipment manufactured and sold by it will, upon shipment, be free of defects in workmanship or material. Should any failure to conform to this warranty become apparent during a period of one year after date of shipment, Rosemount shall, upon prompt written notice from the purchaser, correct such nonconformity by repair or replacement, F.O.B. factory of the defective part or parts. Correction in the manner provided above shall constitute a fulfillment of all liabilities of Rosemount with respect to the quality of the equipment.

THE FOREGOING WARRANTY IS EXCLUSIVE AND IN LIEU OF ALL OTHER WARRANTIES OF QUALITY WHETHER WRITTEN, ORAL, OR IMPLIED (INCLUDING ANY WARRANTY OF MERCHANTABILITY OF FITNESS FOR PURPOSE).

The remedy(ies) provided above shall be purchaser's sole remedy(ies) for any failure of Rosemount to comply with the warranty provisions, whether claims by the purchaser are based in contract or in tort (including negligence).

Rosemount does not warrant equipment against deterioration due to environment. Factors such as corrosive gases and solid particulates can be detrimental and can create the need for repair or replacement as part of normal wear and tear during the warranty period.

Equipment supplied by Rosemount Analytical Inc. but not manufactured by it, will be subject to the same warranty as is extended to Rosemount by the original manufacturer.

PURPOSE

The purpose of this manual is to provide a comprehensive understanding of the Hagan 4 X 5 Power Positioner, components, functions, installation, and maintenance.

This manual is designed to provide information about the Hagan 4 X 5 Power Positioner. We recommend that you thoroughly familiarize yourself with the Description and Installation sections before installing your power positioner.

The overview presents the basic principles of the power positioner along with it's performance characteristics and components. The remaining sections contain detail procedures and information necessary for installation and servicing of the power positioner.

Before contacting Rosemount concerning any questions, first consult this manual. It describes most situations encountered in your equipment's operation and details necessary action.

DEFINITIONS

The following definitions apply to WARNINGS, CAUTIONS, and NOTES found throughout this publication.

WARNING

Highlights an operation or maintenance procedure, practice, condition, statement, etc., if not strictly observed, could result in injury, death, or long-term health hazards of personnel.

CAUTION

Highlights an operation or maintenance procedure, practice, condition, statement, etc., if not strictly observed, could result in damage to or destruction of equipment, or loss of effectiveness.

NOTE

Highlights an essential operating procedure, condition, or statement.

NOTE TO USERS

The P_____ number in the lower right corner of the illustrations in this publication are manual illustration numbers. They are not part numbers, and are not related to the illustration in any technical manner.

TABLE OF CONTENTS

Section			Page
Rosemount Warranty			i
I.	DESCRIPTION		
	1-1.	Component Checklist of Typical System (Package Contents)	1-1
	1-2.	Model Number Matrix	1-1
	1-3.	System Overview	1-1
	1-4.	Model PP405TR Specifications	1-5
	1-5.	Storage Instructions	1-5
II.	INSTALLATION		
	2-1.	Overview	2-1
	2-2.	Special Installation Considerations	2-1
	2-3.	Power Positioner Mounting Instructions	2-1
	2-4.	Air Supply Installation	2-3
	2-5.	Current to Pneumatic Signal Converter (I/P) Electrical Connections	2-5
	2-6.	Linkage Installation	2-5
III.	REVERSE OPERATION		
	3-1.	Operational Description	3-1
	3-2.	Procedures for Reversing Operation	3-1
IV.	CALIBRATION		
	4-1.	Check Power Positioner Calibration	4-1
	4-2.	Stroke Calibration	4-3
	4-3.	Current to Pneumatic Signal Converter (I/P) Calibration	4-5
	4-4.	Linkage Calibration	4-5
V.	TROUBLESHOOTING		
	5-1.	Overview	5-1
	5-2.	Troubleshooting Chart	5-1
VI.	PERIODIC MAINTENANCE		
	6-1.	Overview	6-1
	6-2.	Maintenance Schedule	6-1
	6-3.	General Cleaning and Lubrication	6-1
	6-4.	Pilot Valve Cleaning and Inspection	6-1
	6-5.	Air Filter Cleaning and Draining	6-4
	6-6.	Diaphragm Cleaning and Inspection	6-4
	6-7.	Cylinder and Piston, Cleaning and Lubrication	6-5
VII.	CORRECTIVE MAINTENANCE		
	7-1.	Overview	7-1
	7-2.	Parts Replacement	7-1

TABLE OF CONTENTS (Continued)

Section			Page
VIII.	OPTIONS		
	8-1	Overview	8-1
	8-2	Air Lock	8-1
	8-3	Electric Position Transmitter (EPT)	8-4
	8-4	Heater/Thermostat	8-4
IX.	RECOMMENDED SPARE PARTS		
X.	RETURNING EQUIPMENT TO THE FACTORY		
	INDEX		

LIST OF ILLUSTRATIONS

Figure		Page
1-1.	Typical System Package	1-1
1-2.	Power Positioner Operation	1-3
1-3.	Typical Power Positioner Installation	1-5
2-1.	Clearance Requirements	2-2
2-2.	Mounting and Installation (Footprint) Drawing	2-2
2-3.	4 x 5 Power Positioner Torque Chart	2-3
2-4.	Air Piping Schematic	2-4
2-5.	Linear Linkage Design	2-5
2-6.	Vertical Arm Travel	2-6
2-7.	Driven Shaft Angular Rotation	2-7
2-8.	Connecting Linkage Length	2-9
2-9.	Linear Linkage Design	2-10
2-10.	Direct Acting Cam	2-14
2-11.	Inverse Acting Cam	2-15
2-12.	Characterized Cam Example	2-16
3-1.	Reverse Operation	3-2
4-1.	Calibration Flowchart	4-0
4-2.	Piston Stroke Calibration	4-4
4-3.	I/P Calibration	4-5
4-4.	Linear Linkage Calibration	4-6
4-5.	Characterized Linkage Calibration	4-6
5-1.	4 X 5 Power Positioner Air Piping Schematic	5-1
5-2.	4 X 5 Power Positioner Air Piping Schematic (with Bypass Valve and Air Lock)	5-2
6-1.	Lubrication Chart	6-2
6-2.	Pilot Valve Exploded View	6-3
6-3.	Diaphragm Exploded View	6-5
6-4.	Cylinder Exploded View	6-6
7-1.	Air Filter	7-1
7-2.	Pilot Valve	7-3
7-3.	Receiver Exploded View	7-5
7-4.	Cylinder Exploded View	7-6
7-5.	Cam Replacement	7-5

LIST OF ILLUSTRATIONS (Continued)

Figure		Page
8-1	Air Lock	8-1
8-2	Air Lock Brake Exploded View	8-2
8-3	Air Lock Diaphragm Exploded View	8-3
8-4	Heather/Thermostat	8-5

LIST OF TABLES

Table		Page
1-1	Model Number Matrix	1-0
1-2	Specifications for Model PP405TR Power Positioner	1-4
1-3	Specifications for Recommended Rust Preventive Compound	1-5
2-1	System Flow Chart	2-11
2-2	Cam Rotation Points	2-13
4-1	Device Travel (%)	4-1
4-2	Piston Travel (Stroke) Calibration Schedule	4-2
4-3	Direct and Inverse Calibration Signal Pressures	4-3
5-1	Troubleshooting Chart	5-3
6-1	Maintenance Schedule	6-1
9-1	Recommended Spare Parts for PP405TR 4 X 5 Power Positioner	9-1
9-2	Spare Parts for Options (PP405TR 4 X 5 Power Positioner Only)	9-2
9-3	Bill of Material for PP405TR 4 x 5 Power Positioner	9-2

Table 1-1. Model Number Matrix.

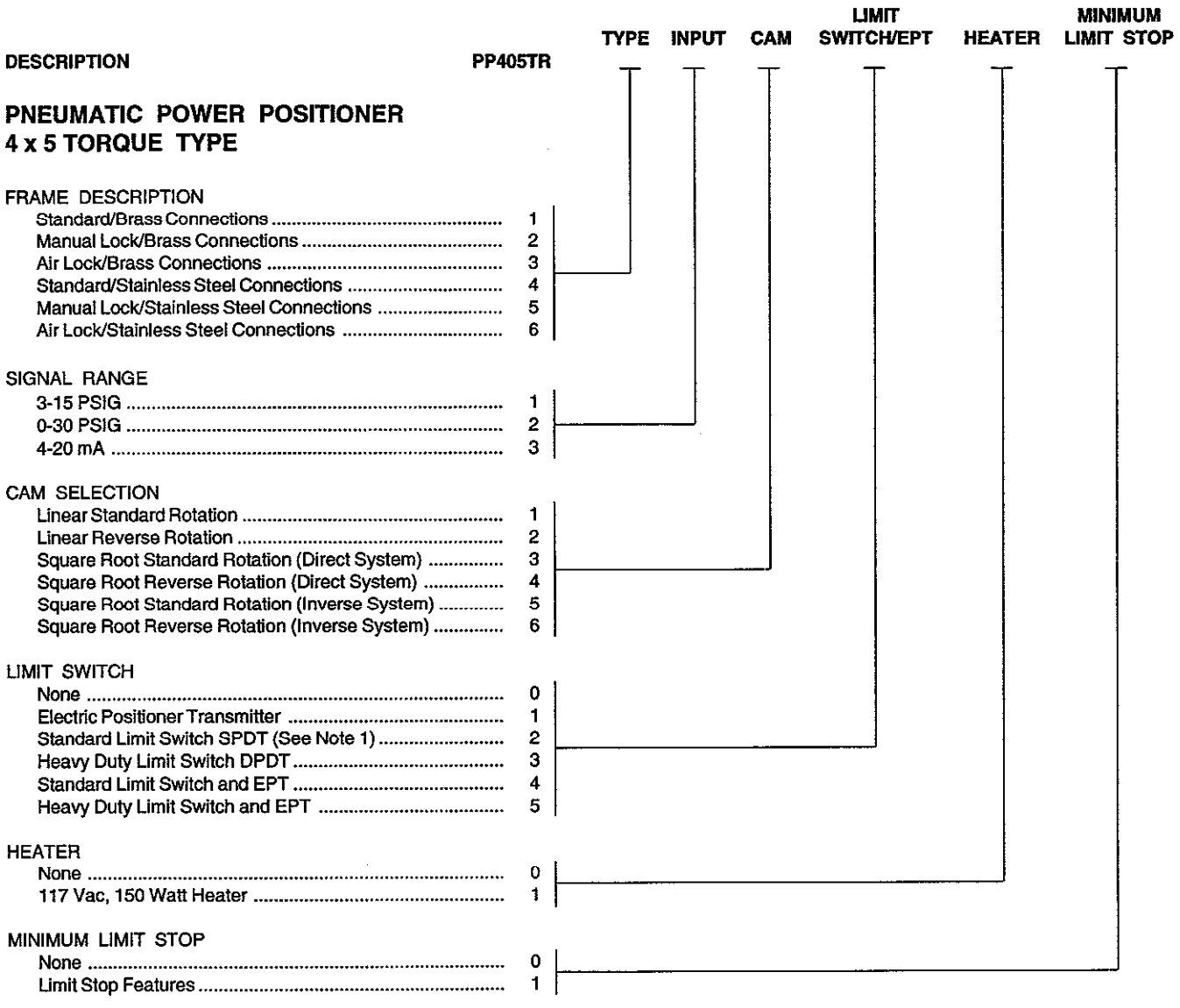

NOTES:

(1) **SPDT Switch Ratings**
15 Amperes, 125, 250, or 480 Vac;
1/2 Ampere, 125 Vdc.

SECTION I. DESCRIPTION

1-1. COMPONENT CHECKLIST OF TYPICAL SYSTEM (PACKAGE CONTENTS). A typical Rosemount 4 X 5 Power Positioner package should contain the items shown in Figure 1-1.

1-2. MODEL NUMBER MATRIX. Use model number matrix, Table 1-1, to verify your style number. The first part of matrix defines the model. The last part defines various options and features of the power positioner. Copy your model number from data plate located on side of power positioner, into top of matrix Table 1-1. Check your model number against power positioner features and options, making sure options specified by this number are on unit. Use this complete model number for any correspondence with Rosemount.

1-3. SYSTEM OVERVIEW.

a. Scope. This Instruction Bulletin supplies details needed to install, operate, and service the Rosemount 4 X 5 Torque Type Power Positioner (Figure 1-1). The standard power positioner comes with manual lever, manual lock, bypass valve, current to pneumatic signal converter (I/P), pressure regulator/filter, supply air filter, clevis, and dust cover. Power positioner options include electric position transmitter, limit switches, heater/thermostat, air lock, and minimum limit stop. Service instructions for these options are covered in appendices to this manual.

b. Power Positioner Features. The standard model power positioner includes the following features:

1. The manual lever provides leverage so operator can manually change position of the device being controlled by hand.

2. The manual lock allows operator to lock piston and output shaft assembly in any position. This is done by turning lock handle fully clockwise, manually shutting off air supply, and opening bypass valve.

3. A bypass valve provides a passage between top and bottom of piston. This equalizes air pressure on both sides of piston, allowing manual positioning of device being controlled.

4. The current to pneumatic signal converter (I/P) controls signal air to power positioner through an electrical signal. This electrical signal can be either a direct 4 to 20 mA signal, or an inverse 20 to 4 mA signal. The power positioner can be ordered without the I/P converter. Without the I/P converter, an

ITEM	DESCRIPTION
1	Model PP405TR Power Positioner
2	Air Filter
3	Instruction Bulletin

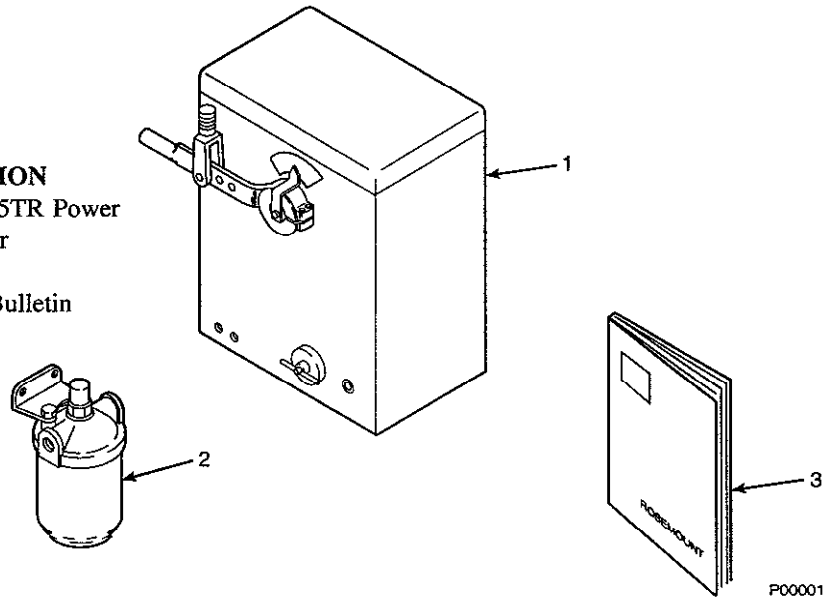

Figure 1-1. Typical System Package

air signal controls the power positioner. This air signal can be direct or inverse, and have a range of 3 to 15, 0 to 30, 3 to 27, or 0 to 60 psig.

5. The pressure regulator/filter maintains a stable and filtered air supply to the I/P converter.

6. The supply air filter will remove finely dispersed water or oil droplets from supply air. Supply air must be free of oil and water to prevent pilot valve sticking.

7. The clevis provides a connection from power positioner to linkage, transferring piston movement to device being controlled.

8. A dust cover provides a NEMA type 3 enclosure. It is removable and splash proof.

c. **Operational Description.** Model PP405TR Torque Type Power Positioner has a pneumatic driven, double acting, piston type power cylinder, in which each input signal positions operating lever to a specific setting. The power positioner can position devices such as dampers, inlet vanes, and control valves.

1. Automatic Operation. Figure 1-2 depicts a direct acting power positioner. In this type of positioner, an increase in signal air pressure to the receiver causes the diaphragm to overcome the tension of the calibration spring, moving diaphragm downwards. The downward motion is transmitted to the pilot valve through a connecting link. This positions the pilot valve stem to send supply air, above the piston, forcing the piston, piston rod, and operating arm downwards. Air from below the piston is exhausted through the pilot valves exhaust silencer plug.

   The shaft assembly rotates as piston rod moves downward. The cam is directly attached to shaft assembly and rotates with it. This causes the compensator lever roller, riding on the cam, to lift the spring socket, increasing pressure on the calibration spring. The increased pressure on the calibration spring returns the diaphragm to its neutral position, closing the pilot valve air ports. Without additional air, piston movement is stopped.

   As signal air decreases the calibration spring pressure moves the diaphragm up. The upward movement of the diaphragm moves the pilot valve stem up, directing air pressure above the piston. This forces the piston, piston rod, and operating lever downward. The downward movement of the piston rod, working through the cam bar and roller, lowers the calibration spring socket and reduces pressure on the calibration spring. This decreased pressure on the calibration spring returns the receiver's diaphragm to a neutral position, closing the pilot valve air ports.

2. Cam. The cam can be shaped (cut) to produce a linear (x), square (x^2), or a square-root ($\sqrt{x}$) relationship between input signal and operating lever stroke. Refer to paragraph 2-6b(2) for cam cutting.

   (a) Linear Shaped Cam. A linear, non-characterized cam will produce a linear shape (1:1) relationship between the input signal and output response.

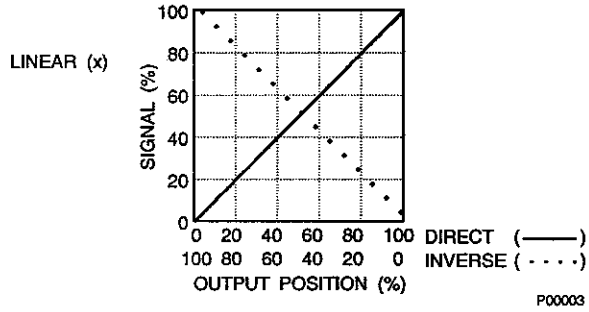

   (b) Squared Shaped Cam. The square (x^2) shape will produce a small output change for a large input change during the lower portion of the signal range. When operating in the upper portion of the signal range, a small input change will produce a large output change.

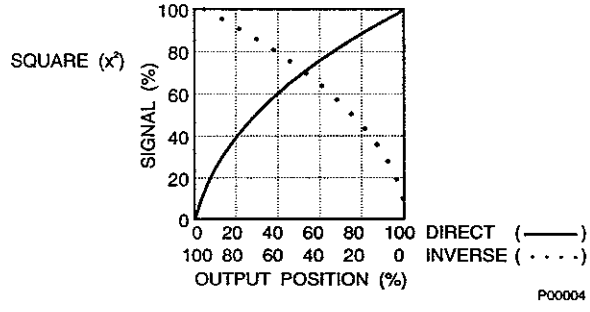

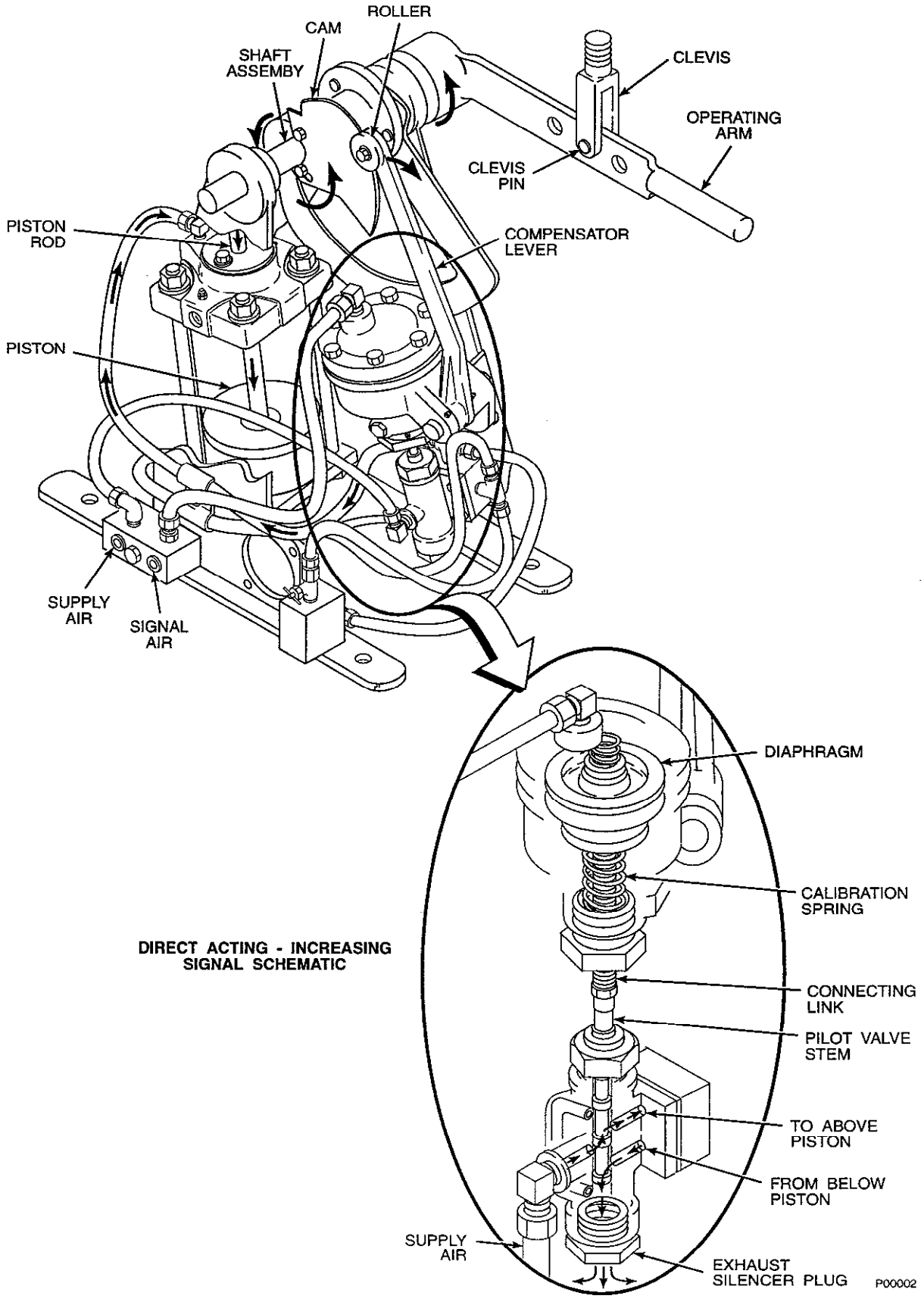

DIRECT ACTING - INCREASING SIGNAL SCHEMATIC

Figure 1-2. Power Positioner Operation

(c) Square-Root Shaped Cam. The square-root ($\sqrt{x}$) shape will produce a relatively large output change for small input changes during approximately the first 10% of signal range. When operating in the upper portion of the signal range, a large input change will be required to produce a small output change.

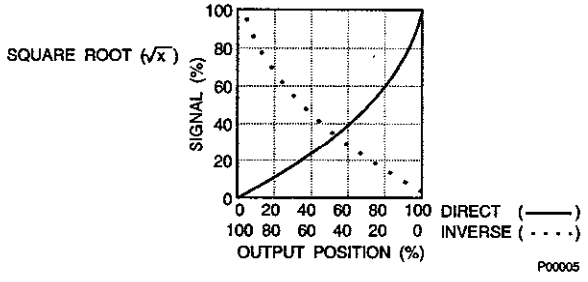

3. Inverse Operation. On inverse acting power positioners, the cam bar is reversed top to bottom and the reversal manifold is turned 90°. This causes the supply air to be directed to the bottom of the piston when signal air pressure is increased and to the top of the piston when signal air pressure is decreased. In this type of installation, piston movement is inversely related to the signal — as signal pressure decreases, the piston lowers, as signal pressure raises, the piston raises.

4. Manual Operation. Power positioner can be controlled manually through manual lever. Moving this lever directly controls position of device being controlled. To operate manual lever, shut off supply air and open bypass valve.

d. **System Considerations.** Prior to installation of your Rosemount 4 X 5 Power Positioner, check that you have all components necessary to install system completely.

Once you have verified that you have all components, select mounting location. A typical installation is illustrated in Figure 1-3. Determine where power positioner will be placed in terms of serviceability, available power supply, ambient temperatures, environmental considerations, and convenience. Power Positioner operating specifications are listed in Table 1-2. Become familiar with Section II, Installation, before installing unit.

Table 1-2. Specifications for Model PP405TR Power Positioner.

Signal Requirements	
Inputs:	
Direct - 4-20 mA/3-15 psig/0-30 psig/3-27 psig	
Inverse - 20-4 mA/15-3 psig/30-0 psig/27-3 psig	
Outputs:	
5 inch Stroke (80° Shaft Rotation)	
Performance	
Repeatability	0.15% of full stroke
Full Stroke Time (unloaded)	3 sec Maximum Allowable
Cylinder Air Pressure	120 psig
Supply Air Consumption	0.5 scfm free air
Control Torque	240 ft-lbs
Stall Torque	400 ft-lbs
Physical Characteristics	
Weight	80 lbs, typical
Dust Cover	Designed to meet NEMA type 3 Requirements
Supply Air Inlet	1/4 inch NPT female connection
Environmental Requirements	
Ambient Temperature Limits	
Without heater	40°F to 140°F (4.5°C to 60°C)
With Heater	-10°F to 140°F (-23.3°C to 60°C)
Relative Humidity	Operable up to 100% RH
Air Supply Requirements	
Operating Air Supply Pressure Range	45 to 120 psig
Recommended Air Supply Pressure	100 psig

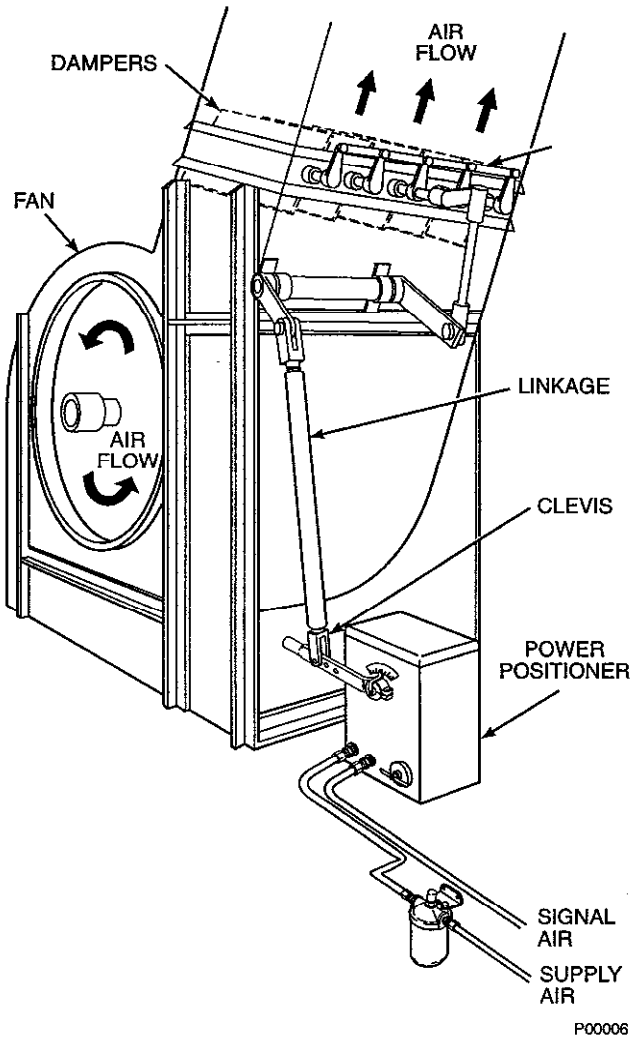

Figure 1-3. Typical Power Positioner Installation

1-4. MODEL PP405TR SPECIFICATIONS. Model PP405TR Power Positioner specifications, Table 1-2, contains information about power positioner operating characteristics. Use Table 1-2 to make sure that available conditions are suitable for power positioner before choosing mounting location.

1-5. STORAGE INSTRUCTIONS. Use the following guidelines for power positioner storage.

a. Storage Environment. Store power positioner in a warehouse environment that maintains the following conditions:

1. Ambient temperatures above 45°F (7°C).

2. Humidity below 80% RH.

b. Power Positioner Preparation for Storage.

WARNING

Keep Tectyl 506 away from heat, sparks, and open flames. Use with adequate ventilation to cure and to prevent an explosive atmosphere from forming.

CAUTION

Use only approved thinning methods when applying rust-preventive compounds. Do not apply heat to compound. Fire or explosion may result. Refer to manufacture of rust-preventive compound for specific application, thinning, clean-up and removal instructions.

Coat all non-painted surfaces and exposed metal with a rust-preventive compound (Tectyl 506 or a comparable substitute). If not using Tectyl 506, compare substitute with specifications for Tectyl 506 (Table 1-3. Specifications for Recommended Rust Preventive Compound).

Table 1-3. Specifications for Recommended Rust Preventive Compound.

REQUIREMENTS	PROPERTIES
Approximate air dry time	1 hour
Low Temperature Flexibility (90° bend with no flaking or cracking)	-10°F (-22.5°C)
Volatile Organic Content (V.O.C.)	3.24 lbs/U.S. Gallon 400 grams/liter
Accelerated Corrosion Tests: (5% Salt Spray (Hours))	
ASTM (see Note 1) B-117 at 1.3 mils (2 x 4 x 1/8 inch Polished Steel Panels)	2000
DIN (see Note 2) 50021 at 32.5 microns (125 x 200 mm DIN 1623 Panels)	168

NOTES: (1) ASTM (American Society for Testing and Materials)
(2) DIN (Deutsche Industrie Normen)

c. Storage Preventive Maintenance. If storing power positioner for more than six months, use the following preventive maintenance guidelines.

1. Cycle cylinder and piston, either manually or by air, every 6 months.

2. Perform General Cleaning and Lubrication (paragraph 6-3), and Cylinder and Piston, Cleaning and Lubrication (paragraph 6-7), before installing power positioner.

SECTION II. INSTALLATION

2-1. **OVERVIEW.** The power positioner is designed to be installed upright. The floor stand is bolted to a prepared horizontal foundation. A minimum of 45 psig to a maximum of 120 psig supply air pressure is needed at mounting location. The power positioner must be controlled by either an electrical signal, when using an I/P signal converter, or by an air signal. All wiring must conform to local and national codes.

2-2. **SPECIAL INSTALLATION CONSIDERATIONS.**

a. **Foundation.** The power positioner's torque is transmitted to operating arm of device being positioned. This torque is also transferred to power positioner's mass and it's foundation. The foundation must be designed to handle the torque produced to keep power positioner stationary. Refer to paragraph 2-3 for detailed foundation requirements.

b. **Supply Air.** A supply air pressure of 45 psig to 120 psig, minimum of 1 scfm, is required. Supply air must be free of oil and water to prevent pilot valve sticking.

c. **Linkage Design.** Final control components play a large part in a control system. Special characteristics of device being controlled affect system response and must be regarded in design and setup of a power positioning system.

Control valves and damper drives regularly allow large flow rate changes, compared to valve movement, near the closed position. Smaller flow rate changes, compared to valve movement, occur near the fully open position. In normal damper application, there may be no flow rate changes after damper has reached 70% open. This characteristic is represented by the following equation:

$$\text{Flow} = k\,(\text{Position})^2$$
$$k = \text{Constant}$$

This equation means that flow is proportional to the square of valve position. As damper or valve opens, the rate at which flow changes per valve position is reduced. As valve or damper closes, the rate at which flow changes per valve position is increased. The constant is a number that allows the equation to work for different flow control devices.

Conduct flow tests before attempting to limit damper opening. Testing is necessary to confirm actual damper characteristics and to make sure control response is proportionate to input signal throughout the flow range. When installing a new power positioning system, take care to properly design the system for linkage size and action. In a properly designed system, a percentage change in control signal produces the same percentage change in flow rate. Refer to paragraph 2-6 for detailed information on design and installation of a linearized control action power positioning system.

2-3. **POWER POSITIONER MOUNTING INSTRUCTIONS.**

a. **Working Clearance Requirements.** Make sure area is clear of obstructions that will interfere with power positioner operation and maintenance. For standard unit, allow an open area of 22 inches (vertically from foundation) by 16 inches (side to side) by 28 inches (front to back). This will allow for removal of dust cover, maintenance, and full travel of operating lever. For extended cover unit, allow an additional 4 inches vertically (26 inches from foundation) for increased space requirements of this power positioner (Figure 2-1).

b. **Location Selection.**

1. Select location for power positioner as near to the device being controlled as possible, making sure necessary clearance for operation and maintenance, as specified in paragraph 2-3a, is available.

2. Use Specifications for Model PP405TR Power Positioner, Table 1-2, to make sure environmental conditions are suitable for the power positioner.

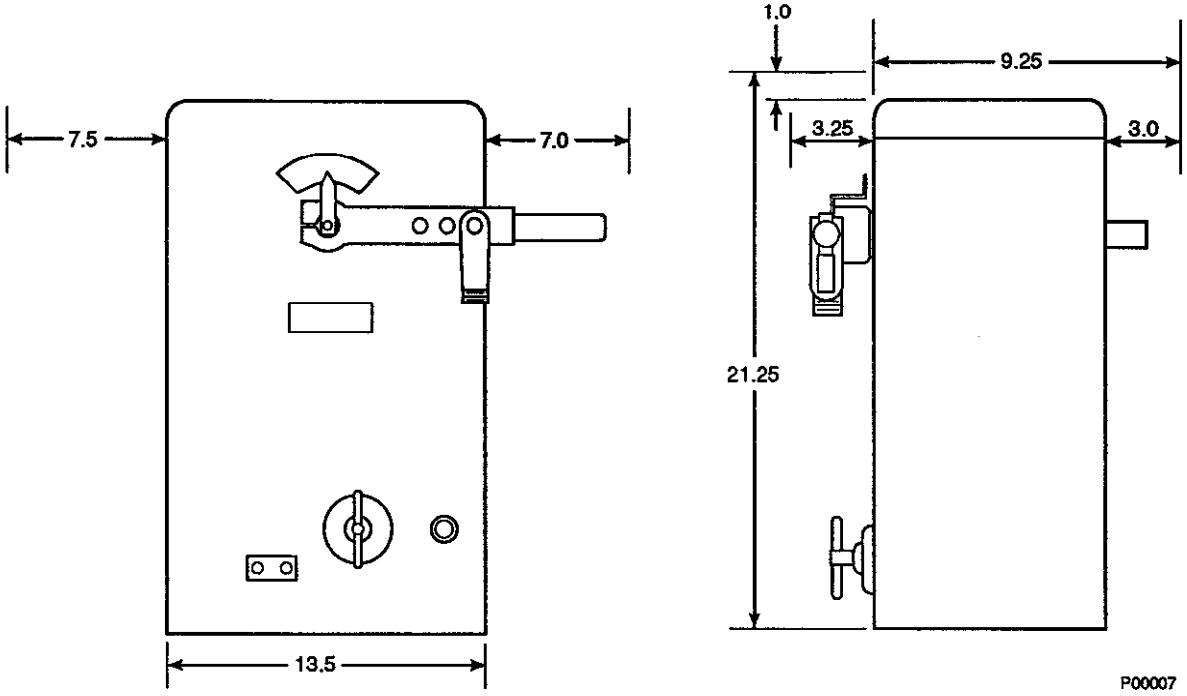

Figure 2-1. Clearance Requirements

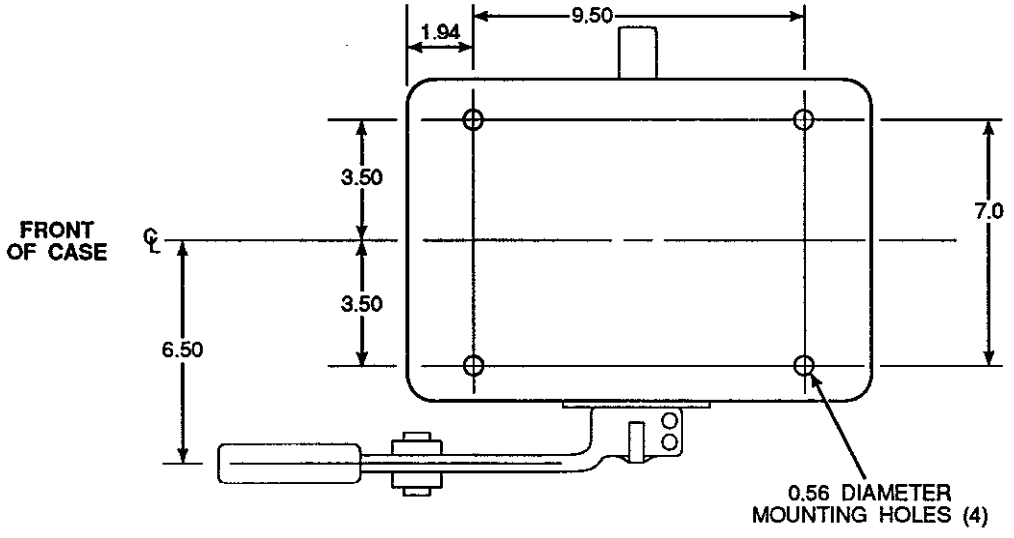

Figure 2-2. Mounting and Installation (Footprint) Drawing

3. Become familiar with all of Section II, Installation, before actual installation is started.

c. **Mounting Procedure.**

1. Design and Manufacture Foundation. Foundation must be able to withstand at least 500 ft-lbs torque plus 80 lbs weight. Refer to Figure 2-2 for footprint dimensions of power positioner. Use this footprint as a guide to design foundation to match base of power positioner. Mounting holes in base are drilled for 1/2 inch foundation bolts. Decide which foundation material is best suited for your application, steel or concrete, and design and manufacture foundation.

2. Installation.

   (a) Install power positioner on foundation with 1/2 inch bolts and standard flat washers.

   (b) Make sure power positioner is level. Check by measuring side to side and front to back with a level.

   (c) If power positioner is not level, remove 1/2 inch bolts that secure power positioner to foundation and install shims between the power positioner and foundation. Continue this process until power positioner is level when 1/2 inch mounting bolts are tightened. This will prevent distortion of power positioner stand.

   (d) If installed on a concrete foundation, grout foundation with additional concrete to prevent distortion of power positioner stand.

2

2-4. AIR SUPPLY INSTALLATION. Using Figure 2-3, match the torque load needed to position your device to the "maximum torque required" axis along the bottom of the graph. From this point, move vertically up to the control torque curve. From the point that intersects control torque curve, move horizontally to the left scale labeled "supply air pressure". This is the minimum supply air required to develop the required control torque. The stall torque curve represents the maximum amount of torque the power positioner will produce for given supply air pressure before stalling out.

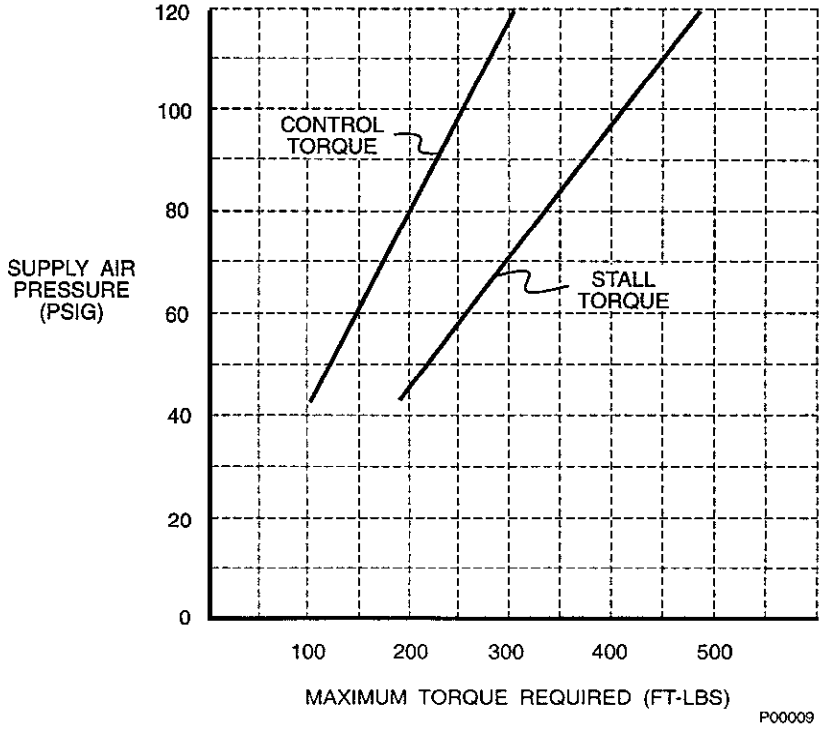

Figure 2-3. 4 x 5 Power Positioner Torque Chart

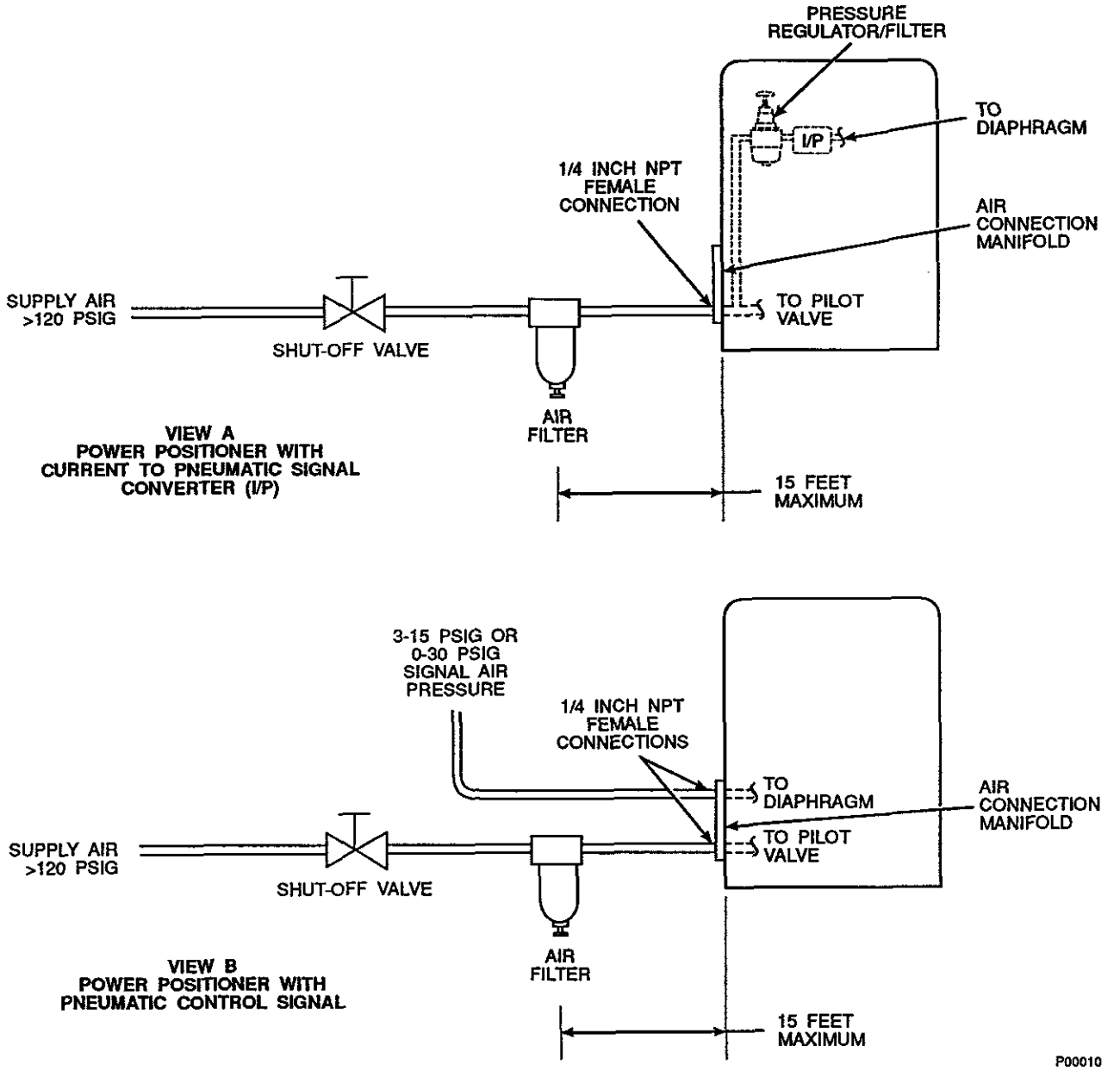

Figure 2-4. Air Piping Schematic

a. Air Line Requirements. Installation of air filter is necessary for proper power positioner operation. A manual shutoff valve should be installed in the air supply line before the air filter, Figure 2-4. The air filter will remove finely dispersed water or oil droplets, preventing pilot valve stem from sticking.

If your unit is not equipped with an I/P signal converter, install a separate signal line as shown in Figure 2-4 View B. The power positioner can accept different ranges of signal air pressures. Refer to your model number and model number matrix (Table 1-1) to determine signal air pressure required.

b. Supply Air and Signal Air Connections. Basic schematics are shown in Figure 2-4. The installation of the air filter is as follows:

1. Mount bracket for air filter directly on the back of the stand assembly. If this is unsuitable, mount air filter within 15 feet of power positioner.

NOTE

Prior to connecting supply air line or signal air line, purge air system until all moisture and debris are blown out.

2. Purge air supply system and connect air supply line to the air filter inlet. Run a second line from the air filter outlet to the power positioner supply air inlet connection. All fittings are 1/4 inch NPT.

3. Purge signal air line and connect to signal air connection on power positioner.

2-5. CURRENT TO PNEUMATIC SIGNAL CONVERTER (I/P) ELECTRICAL CONNECTIONS. Connect electrical signal input to I/P converter and calibrate if necessary. Refer to paragraph 4-3 for calibration procedures. The connections must be made by screw terminals. If the I/P has pigtail leads instead of screw terminals, the connection must be made at a terminal block. Gage of wire required is 18 gage signal wire. The signal that will control the I/P should have a range of 4 to 20 mA at a voltage of 24 Vdc.

a. **Direct Acting.** Connect positive signal to black lead and negative signal to white lead.

b. **Reverse Acting.** Connect positive signal to white lead and negative signal to black lead.

2-6. LINKAGE INSTALLATION. Install linkage for either a characterized flow control device, or linkage for a linear flow control device. Linkage described is pipe (3/4 inches diameter), maximum length of 21 feet 9 inches. Maximum horizontal offset is ±2 inches, at widest part of linkage system.

a. **Linkage Installation for a Characterized Flow Control Device.**

1. Measure length of driven lever (R_1) on device to be controlled (Figure 2-5).

2. Attach the linkage clevis to the power positioner's drive lever so that distance R_2 is equal to R_1.

3. Close damper of device being controlled to minimum flow position.

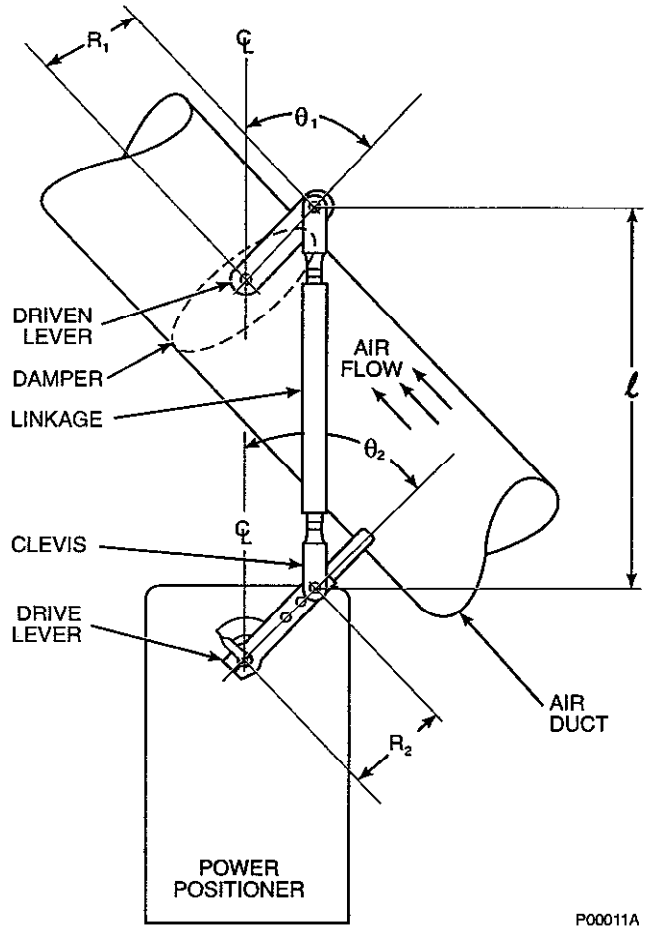

Figure 2-5. Linear Linkage Design

4. Measure angle (θ_1) of device's driven lever from vertical center line.

5. Install power positioner's drive lever so its angle (θ_2) is the same as the device's driven lever (θ_1).

6. Measure distance (ℓ) between drive and driven levers connection holes. Allowing for clevis length, cut pipe to fit this measurement. Install clevises.

7. Install linkage pipe between drive and driven levers. Check for freedom of movement by operating power positioner's manual lever. Make minor adjustments to linkage length by turning linkage clevis fitting in or out as necessary.

b. **Linkage Installation for a Linear Flow Control Device.** Linear flow control devices require a characterized control system. This can be accomplished by either characterizing linkage or characterizing power positioner.

If greater torque is required at start of power positioner movement, characterize linkage system. This is covered in step 1. below.

If this additional starting torque is not required, a linear linkage can be installed. The power positioner cam must be shaped to characterize power positioner. This is covered in step 2.

NOTE

Linkage installation described in this section of the manual is for direct acting power positioners.

1. Characterized Linkage System.

   (a) Make sure a linear cam is installed to get linear outputs from power positioner.

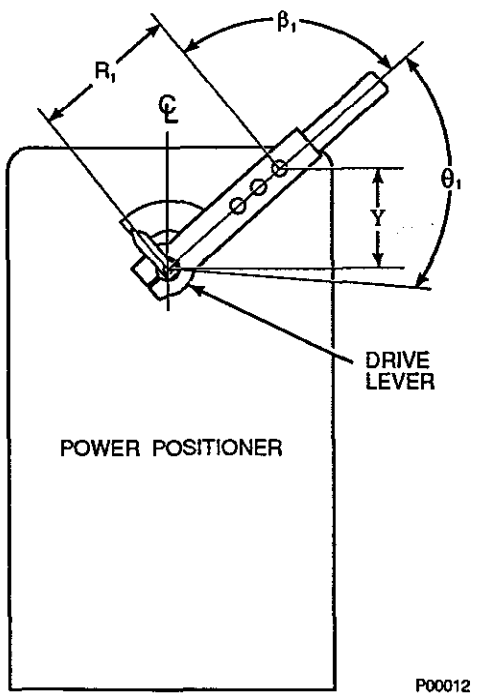

Figure 2-6. Vertical Arm Travel

   (b) Figure out how far vertically the operating lever travels using Figure 2-6 and the following equation:

$$Y = 2R_1 [Sin((\theta_1+\beta_1)/2.0)]^2 - [Sin\beta_1/2.0]^2$$

NOTE

The following known values are used to calculate the vertical distance travelled by the drive lever; "Y".

R_1 = Length of drive lever (from shaft center to clevis pin center) measured in inches.

θ_1 = Total angular rotation of drive lever. If power positioner is at full stroke, this measurement is 80°.

β_1 = Angular measurement of drive lever from vertical centerline with piston fully extended.

To perform the following procedure, a calculator with basic functions, plus the following scientific functions, is necessary:

-Sine Function (SIN)
-Square Function (x^2)

Use the following procedure to determine Y, the vertical distance travelled by drive lever:

1 Add value of θ_1 to value of β_1.

2 Divide answer from step 1 by 2.0.

3 Enter answer from step 2 and press sine key (SIN).

4 Press square key (x^2).

5 Multiply answer from step 4 by length of drive lever (R_1).

6 Multiply answer from step 5 by 2.

7 Write down answer from step 6 and label it 6 for use later on.

8 Clear calculator.

9 Enter value of β_1.

10 Press sine key (SIN).

11 Divide answer from step 10 by 2.0.

12 Press square key (usually key marked x^2).

13 Write down answer from step 12 and label it 12.

14 Clear calculator.

15 Enter value marked 6 and subtract value marked 12.

16 The value in step 15 is equal to vertical distance travelled by drive lever "Y".

(c) Figure out angular rotation of driven lever. This is done in terms of drive lever rotation. The angular rotation follows Figure 2-7 and the relationship:

$$\theta_2 = 2[Sin^{-1}(R_1/R_2(Sin(\beta_1+\theta_1)/2)^2 - (Sin\beta_1/2)^2 + (Sin\beta_2/2)^2)^{0.5} - \beta_2/2]$$

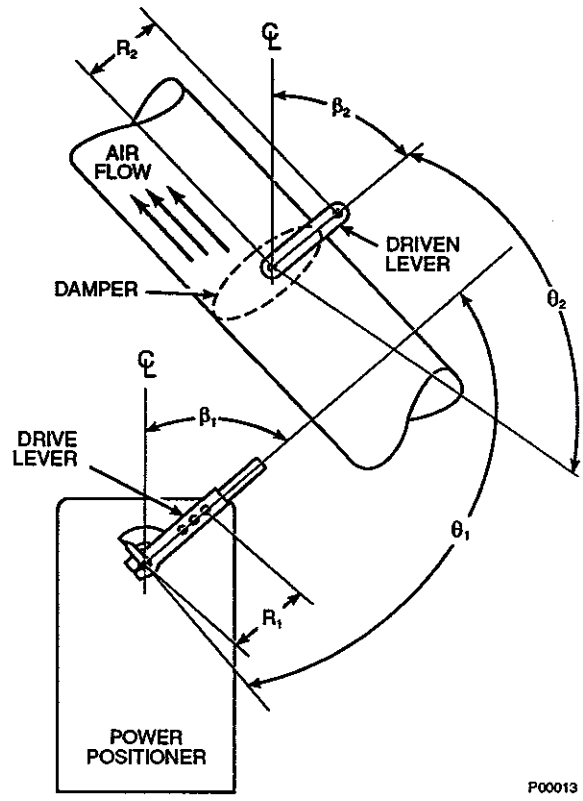

Figure 2-7. Driven Shaft Angular Rotation

NOTE

The following known values are used to calculate the total angular rotation of the driven lever; θ_2.

- θ_1 = **Total angular rotation of the drive lever. If power positioner is at full stroke, this measurement is 80°.**
- R_1 = **Length of the drive lever (from shaft center to clevis pin center) measured in inches.**
- R_2 = **Length of the driven lever (from shaft center to clevis pin center) measured in inches.**
- β_1 = **Angular measurement of drive lever from vertical centerline with piston fully extended.**
- β_2 = **Angular measurement of driven lever from vertical centerline with damper fully closed.**

To perform the following procedure, a calculator with basic functions, plus the following scientific functions, is necessary:

-Sine Function (SIN)
-Inverse Sine Function (SIN^{-1}) or (INV SIN)
-Square Function (x^2)
-Power Function (y^x)

Use the following procedure to determine θ_2, the angular rotation of the driven lever.

1 Add value of β_1 to value of θ_1.

2 Enter answer from step 1 and press sine key (SIN).

3 Divide answer from step 2 by 2.0.

4 Multiply answer from step 3 by length of driven lever (R_2).

5 Write down answer from step 4 and label it 4. Clear calculator.

6 Enter value for length of drive lever (R_1).

7 Divide value from step 6 by value marked 4.

8 Press square key (x^2).

9 Write down answer from step 8 and label it 8 for use later.

10 Clear calculator.

11 Enter value for β_1 and press sine key (SIN).

12 Divide answer from step 11 by 2.

13 Press square key (x^2).

14 Write down answer from step 13 and label it 13 for later use.

15 Enter value for β_2 and press sine key (SIN).

16 Divide answer from 15 by 2.

17 Press square key (x^2).

18 Write down answer from 17 and label it 17 for later use.

19 Clear calculator.

20 Enter value marked 8.

21 Subtract value marked 13 from value marked 8.

22 Subtract value marked 17 from step 21.

23 Press power function key (y^x).

24 Enter 0.5.

25 Press inverse sine (INV SIN or SIN^{-1}).

26 Write down answer from step 25 and label it 25.

27 Clear calculator.

28 Enter value for β_2.

29 Divide value from step 28 by 2.

30 Write down answer from step 29 and label it 29. Clear calculator.

31 Enter value from step 25.

32 Subtract value from step 29.

33 Multiply answer from step 32 by 2.

34 The value in step 33 is equal to total angular rotation of driven lever "θ_2".

(d) Figure out length of connecting linkage based on length of drive lever, driven lever, and the initial offset of both. Use Figure 2-8 and the following relationship:

$$\ell = [L - (R_1 Cos\beta_1 + R_2 Cos\beta_2)^2 + (R_1 Sin\beta_1 - R_2 Sin\beta_2)]^{0.5}$$

NOTE

The following known values are used to calculate the length of the linkage in inches; "ℓ".

L = Length between drive and driven shaft center lines, measured in inches.

R_1 = Length of the drive lever (from shaft center to clevis pin center) measured in inches.

R_2 = Length of the driven lever (from shaft center to clevis pin center) measured in inches.

β_1 = Angular measurement of drive lever from vertical center line with piston fully extended.

β_2 = Angular measurement of driven lever from vertical center line with damper fully closed.

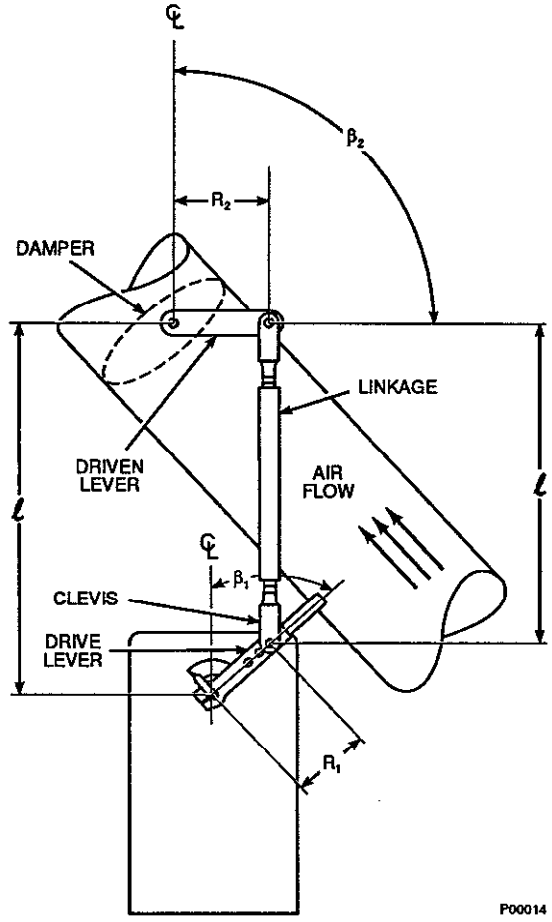

Figure 2-8. Connecting Linkage Length

To perform the following procedure, a calculator with basic functions, plus the following scientific functions, is necessary:

-Sine Function (SIN)
-Cosine Function (COS)
-Square Function (x^2)
-Power Function (y^x)

Use the following procedure to determine ℓ, the length of connecting linkage in inches:

1 Clear calculator.

2 Enter value for β_1 and press cosine key (COS).

3 Multiply answer from step 2 by length of drive lever (R_1).

4 Write down answer from step 3 and label 3.

5 Clear calculator.

6 Enter value for β_2 and press cosine key (COS).

7 Multiply answer from step 6 by length of drive lever (R_1).

8 Write answer from step 7 down and label 7. Clear calculator.

9 Add answer from step 8 to value marked 3.

10 Press square key (x^2).

11 Write down answer from step 10 and label 10.

12 Clear calculator.

13 Enter distance between drive and driven shaft (L).

14 Subtract value marked 10 from step 13.

15 Write down answer from step 14 and label 14.

16 Clear calculator.

17 Enter value for β_1 and press sine key (SIN).

18 Multiply answer from step 17 by length of drive lever (R_1).

19 Write down answer from step 18 and label 18.

20 Clear calculator.

21 Enter value for β_2 and press sine key (SIN).

22 Multiply answer from step 21 by length of driven lever (R_2).

23 Write down answer from step 22 and label 22. Clear calculator.

24 Subtract value marked 22 from value marked 18.

25 Add answer from step 24 to value marked 14.

26 Press power function key (y^x).

27 Enter 0.5 into calculator.

28 The value in step 27 is equal to length of connecting linkage "ℓ".

Design linkage system by using values for lengths of drive and driven levers, angular position of both levers from vertical (offsets), and distance between drive and driven levers centers to calculate length of linkage.

(e) Close damper to minimum flow position. Make sure driven lever is at angle (β_2) and drive lever is at angle (β_1).

(f) Cut linkage pipe to length (ℓ) allowing for both clevises. Attach clevises and install linkage between operating levers.

(g) Check for freedom of movement by operating power positioner's manual lever. Make minor adjustments to linkage length by turning pipe to clevis fitting in or out as necessary.

2. Characterized Power Positioner.

(a) Measure full travel of device being controlled from full open to full closed. Record maximum and minimum positions.

(b) Install Linear Linkage.

1 Measure length of driven lever (R_1) on device to be controlled (Figure 2-9).

2 Attach clevis to drive lever so that distance R_2 is equal to R_1.

3 Close damper of device being controlled to minimum flow position.

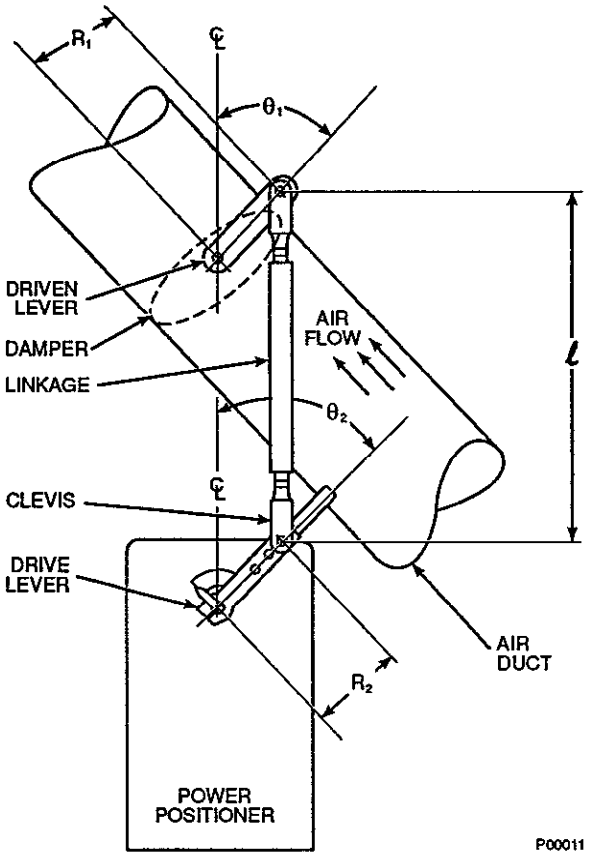

Figure 2-9. Linear Linkage Design

4 Measure angle (θ_1) of device's driven lever from vertical center line.

5 Install power positioner's drive lever so its angle from vertical center line (θ_2) is equal to device's driven lever angle (θ_1).

6 Measure distance (ℓ) between drive and driven levers connection holes. Allowing for clevis length, cut pipe to fit this measurement. Attach clevises.

7 Install linkage pipe between drive and driven levers. Check for freedom of movement by operating power positioner's manual lever. Make minor adjustments to linkage length by turning linkage clevis fitting in or out as necessary.

(c) Check power positioner calibration and make sure linear cam is installed. Refer to paragraphs 4-2 and 4-3. Make any adjustments to power positioner prior to cutting cam.

(d) Copy "System Flow Chart" (Table 2-1). Measure and record actual flow of system starting at 0% input signal to power positioner and increasing up to 100% in increments of 20%. Divide actual flow by flow at 100% input signal to determine percent flow. Enter percent flow in percent flow column in Table 2-1.

(e) Near bottom edge on a sheet of graph paper, draw a baseline (Graph 1) twenty blocks long. Label "% Flow".

(f) Starting at left edge of baseline, draw a vertical line 20 blocks long. Label this line "% Input Signal".

Table 2-1. System Flow Chart.

INPUT SIGNAL (%)	ACTUAL FLOW (scfm)	PERCENT FLOW (%)
0%		
20%		
40%		
60%		
80%		
100%		

(g) Starting at right edge of baseline, draw a vertical line 20 blocks long. Label this line "% Cam Rotation".

(h) Scale "% Input Signal" line by marking baseline 0%. Mark 10% point two blocks upward. Continue labeling in 10% increments up to 100%.

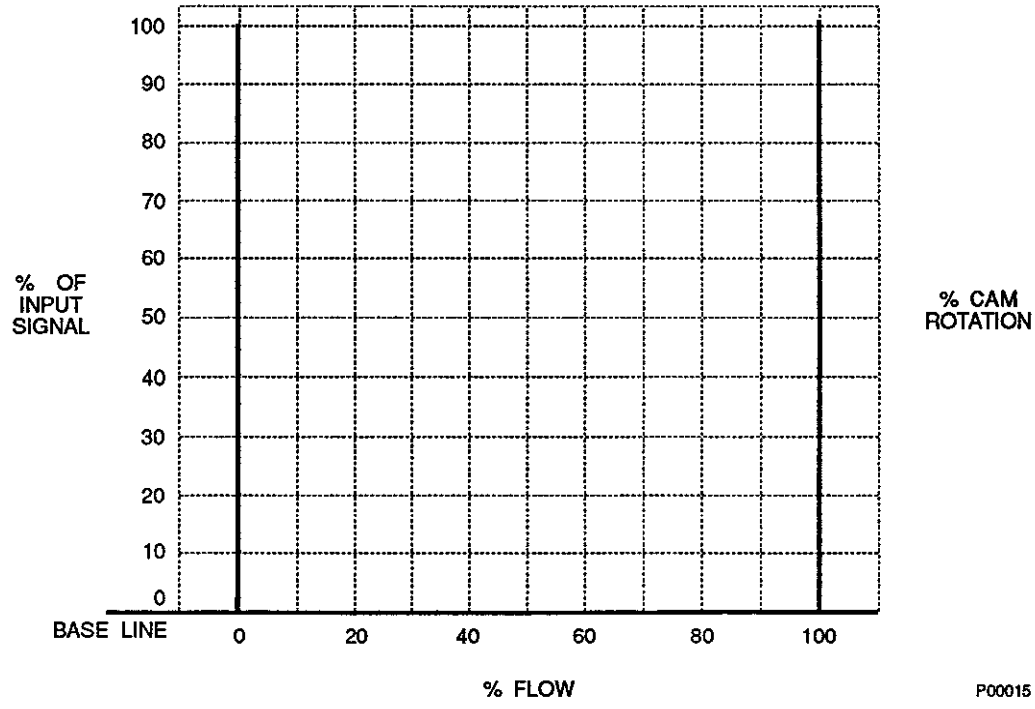

Graph 1

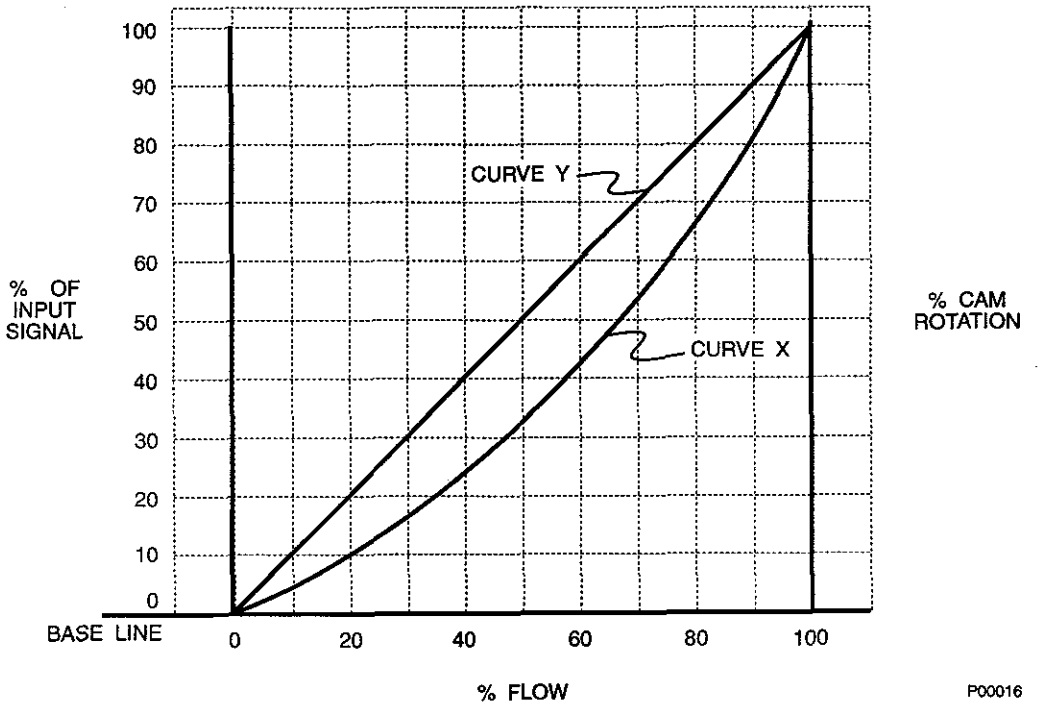

Graph 2

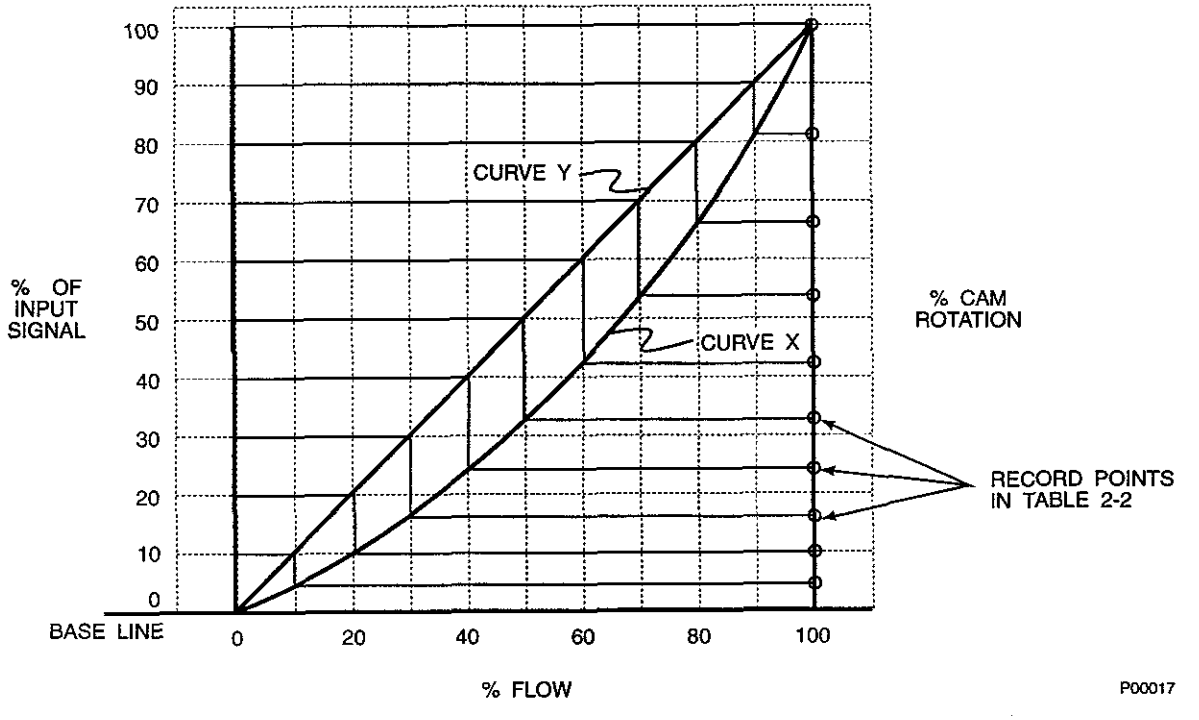

Graph 3

(i) Scale baseline by marking left end 0%. Mark 20% point four blocks to right horizontally. Continue labeling in 20% increments up to 100%.

(j) Plot points on graph (Graph 2) with data from system flow chart (Table 2-1). For example: Using Table 2-1 in Graph 2, at a 20% input signal, percent of flow is 35%; follow 20% input signal line until it intersects 35% flow line; place a mark at this point. Repeat this procedure for 40%, 60%, 80%, and 100% input signals, placing marks at each intersection with corresponding flow line. Connect these points with a smooth curve starting at a point with zero % flow and zero % input signal. Label curve X.

(k) Draw a straight line from zero point on curve X to 100% point on curve X. Label this line curve Y.

(l) From 10% increment on "% Input Signal" scale, draw a horizontal line to curve Y (Graph 3).

(m) From point in step (l), draw a vertical line downward to meet curve X.

(n) From point in step (m), draw a horizontal line to "% Cam Rotation" scale.

(o) Repeat process from step (l) through step (n) for 20% to 90% input signal.

(p) Value of "% Cam Rotation" is read where line in step (n) intersects "% Cam Rotation" scale. Estimate value by using percentage scale on left edge of graph. Copy Table 2-2 and record values in % Cam Rotation in blank column and again in Table 4-1 Characterized column for future reference.

(q) If power positioner is direct acting, make a copy of Figure 2-10, Direct Acting Cam. If power positioner is to be reverse acting, make a copy of Figure 2-11, Inverse Acting Cam.

Table 2-2. Cam Rotation Points.

Example:

% INPUT SIGNAL	% CAM ROTATION
0	0
10	3
20	9
30	16
40	23
50	33
60	45
70	55
80	67
90	84
100	100

Record Values from step (o):

% INPUT SIGNAL	% CAM ROTATION
0	
10	
20	
30	
40	
50	
60	
70	
80	
90	
100	

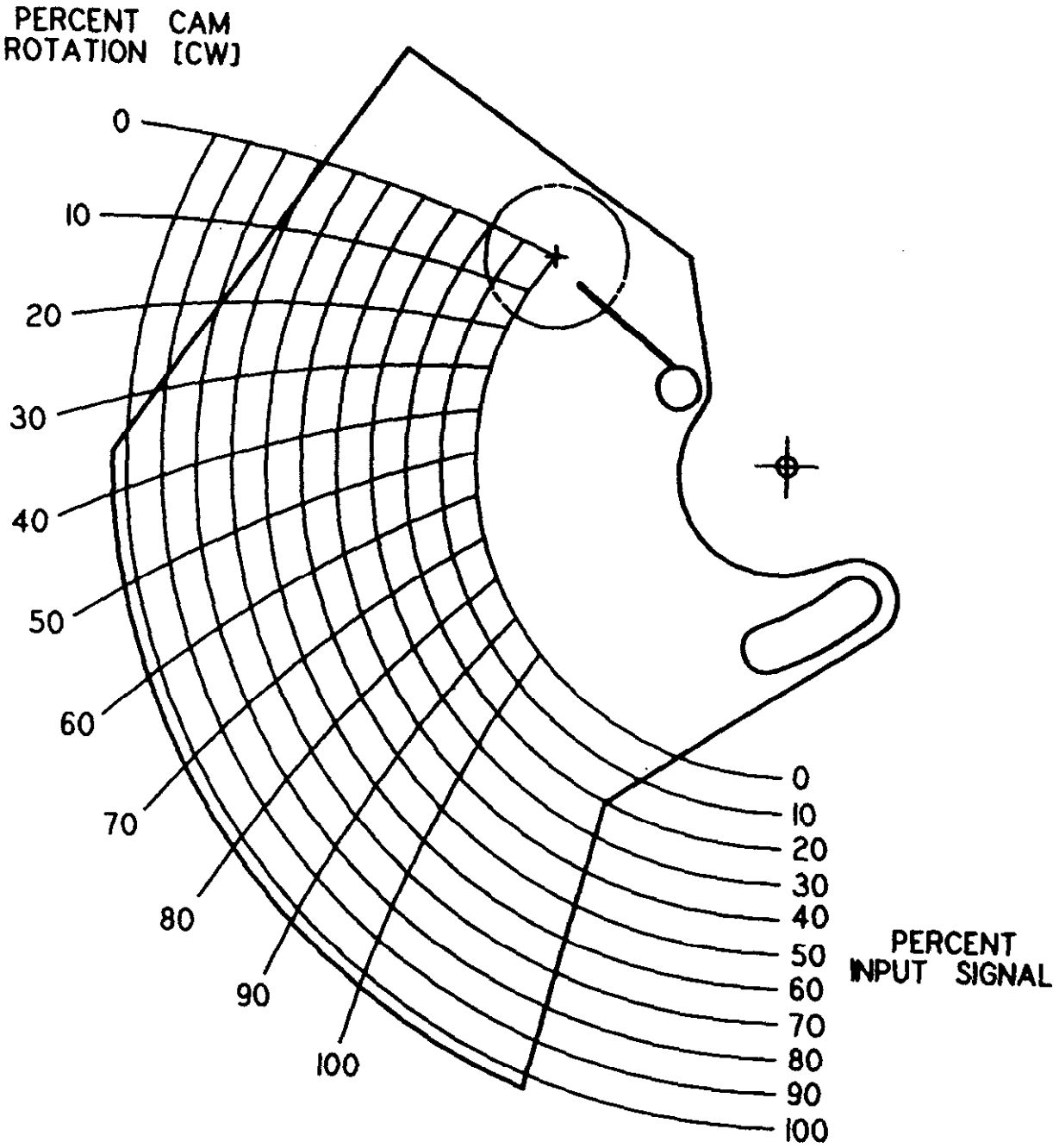

Figure 2-10. Direct Acting Cam

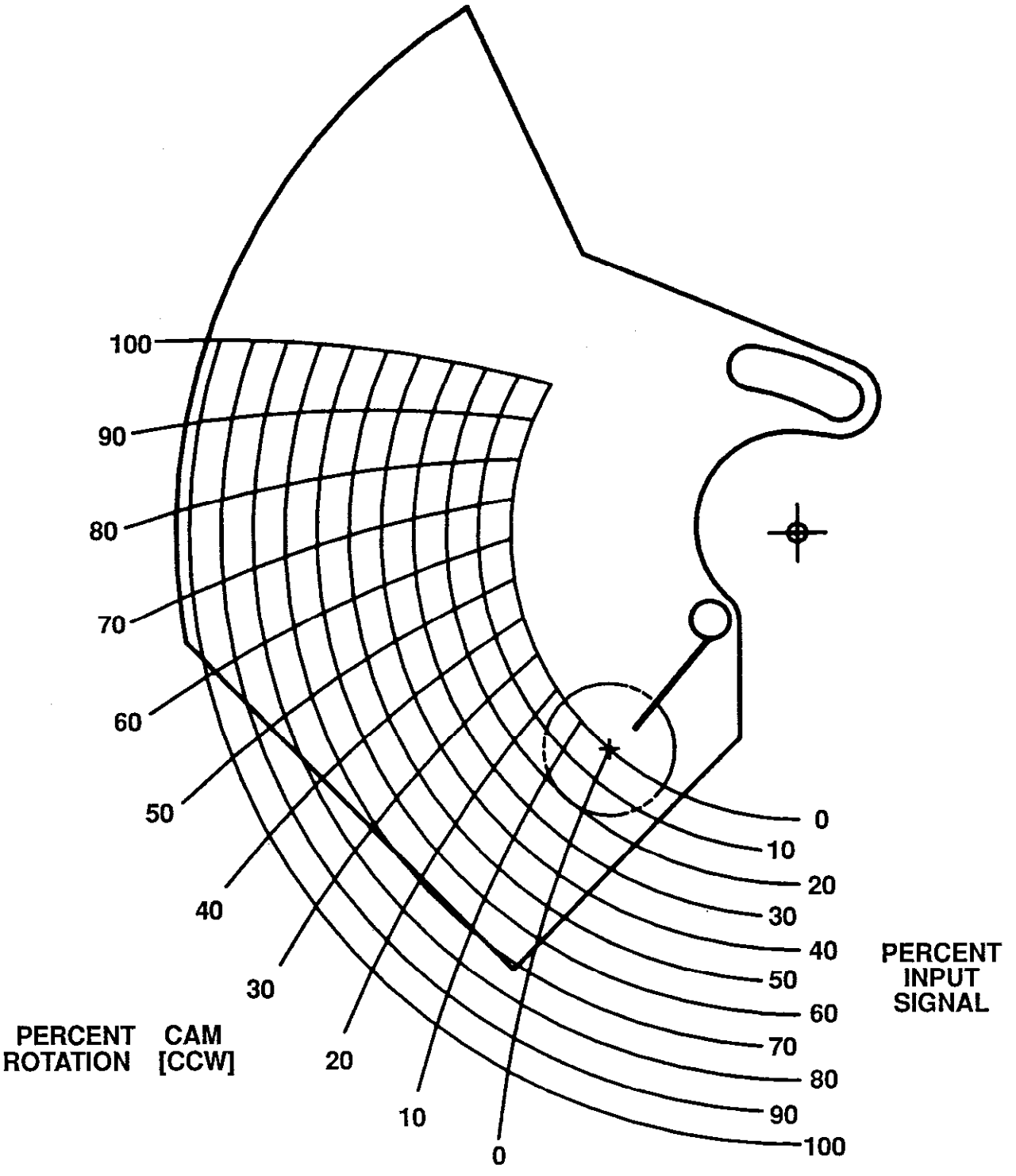

Figure 2-11. Inverse Acting Cam

(r) Plot points from Table 2-2 on copy of cam. Refer to example in Figure 2-12.

(s) Set compass for 0.4375 inch radius and draw 0.875 inch circles using points plotted in step (r) as center.

(t) Draw a smooth curve connecting edges of circles that are on same side as cam's mounting holes. This is shape of new cam contour. Make several copies for future reference.

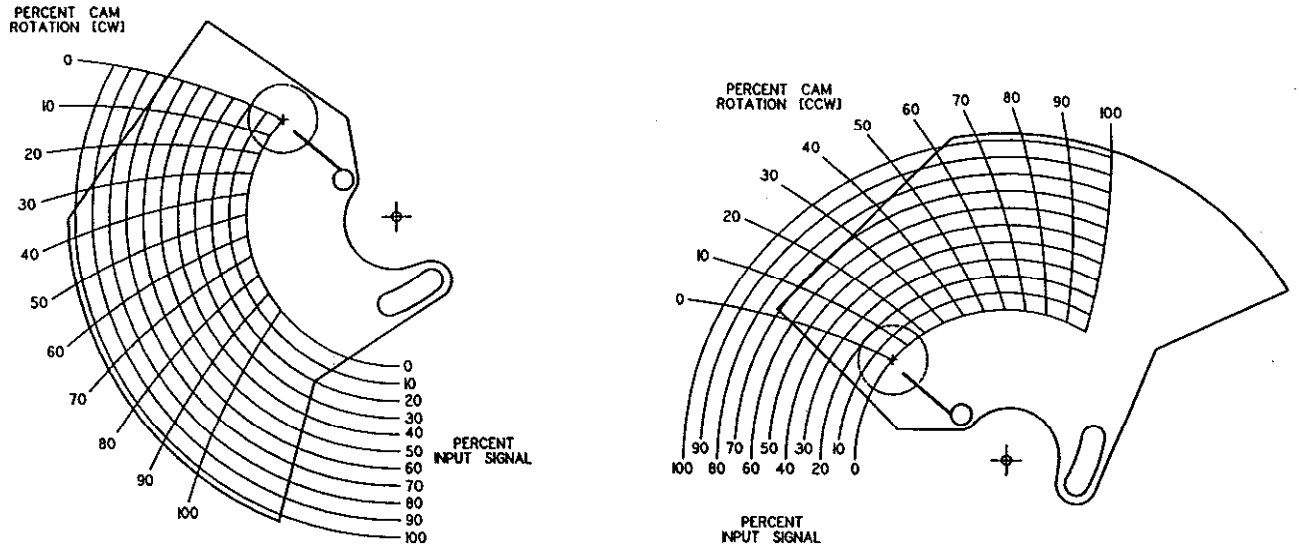

DIRECT ACTING CAM

INVERSE ACTING CAM

Figure 2-12. Characterized Cam Example

(u) Cut out paper cam leaving new cam contour, mounting hole, and slotted hole.

(v) Line up mounting and slotted holes of paper cam to mounting and slotted holes of metal cam. Cement paper cam to metal cam. Remove material from cam as needed to give metal cam shape of paper cam. Using a file or similar tool, smooth curve until no ridges or imperfections are felt on edge of curve.

(w) Install cam on power positioner and check for a linear relationship between actual flow of system and input signal to power positioner. A 10% input signal will produce a 10% flow, a 50% input signal will produce a 50% flow. Make minor adjustments by draw filing cam.

(x) Record power positioner characterized action in Table 4-2, schedule "D". Use the following procedure:

1 Set signal air to 0%.

2 Measure distance from top of packing washer to bottom of clevis head.

3 Increase signal air to 10%.

4 Measure distance from top of packing nut to bottom of clevis head. Subtract value in step 2. Record this value as piston movement in inches for 10% signal air in Table 4-2.

5 Repeat steps 3 and 4 for 20% to 90% in 10% increments.

6 Divide actual distance traveled at each signal by total distance traveled to determine percent of full stroke. Enter percent traveled at each signal in percent of full stroke column.

SECTION III. REVERSE OPERATION

3-1. OPERATIONAL DESCRIPTION. In reverse action positioners, piston and piston rod movement react opposite as direct acting positioners (Figure 1-2). An inverse cam is installed and supply air hoses to the cylinder are reversed. The switched hoses cause supply air to pressurize below piston for increasing signal air pressures and above piston for decreasing signal air pressures. In this case, piston movement is inversely related to the signal. A falling input signal pressure causes piston to raise and an increasing input signal pressure lowers piston.

3-2. PROCEDURES FOR REVERSING OPERATION. To reverse power positioner operation, refer to Figure 3-1 and use the following procedures.

a. Reversing Action Procedure.

WARNING

Before performing any maintenance, adjustment, or repair action on power positioner, shut off supply air, signal air, and any electrical supply or electronic signals to power positioner. Isolate power positioner from all systems connected to the power positioner. Severe injury or death may result from large torque power positioner is capable of producing, or from electrical shock.

1. Remove power positioner from service.
2. Disconnect increasing signal supply air hose from 90° elbow (3, Figure 3-1) at top of cylinder (4).
3. Disconnect decreasing signal supply air hose from 90° elbow (3) at bottom of cylinder (4) and connect to 90° elbow at top of cylinder.
4. Connect increasing signal supply air hose (1) to lower cylinder 90° elbow (3).
5. Remove lock screw (5), adjustment screw (6) and washers (7) securing cam (8) to cam hub (9). Remove cam from hub.
6. Open bypass valve (10).
7. Using manual lever, position piston (11) at bottom of cylinder (4). Piston will be at bottom of cylinder when clevis head is at lowest point.
8. Install inverse cam (8) on cam hub (9). Align cam so adjustment screw hole is in center of adjustment slot. Secure inverse cam to cam hub with lock screw (5), adjustment screw (6) and washers (7).
9. Loosen socket head cap screws (12) securing cam hub (9) to shaft assembly (13).
10. Adjust cam hub (9) so compensator lever roller (14) is in pocket of inverse cam. This point is cam's zero position.
11. Tighten socket head cap screws (12) securing position of cam hub (9) on shaft assembly (13).
12. Loosen lock screw (5) and adjustment screw (6) securing cam (8) to cam hub (9).
13. Make minor adjustments to position of cam (8) and zero compensator roller. Make sure roller is perfectly aligned to zero point on cam.

b. Calibrate Stroke. This procedure is to be used only for power positioners with an inverse acting cam.

WARNING

Before performing any maintenance, adjustment, or repair action on power positioner, shut off supply air, signal air, and any electrical supply or electronic signals to power positioner. Isolate power positioner from all systems connected to the power positioner. Severe injury or death may result from large torque power positioner is capable of producing, or from electrical shock.

1. Remove power positioner from service.

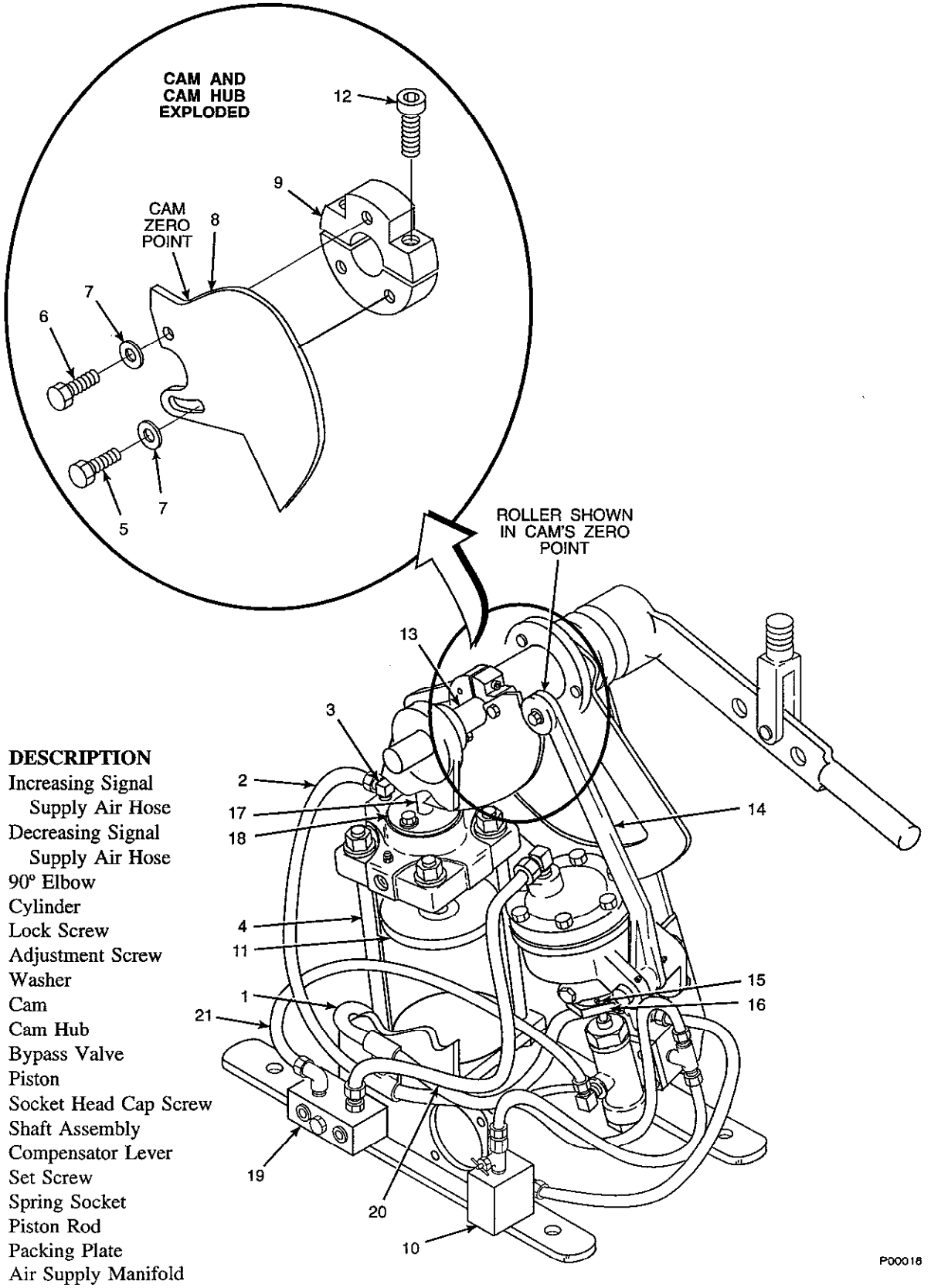

ITEM	DESCRIPTION
1	Increasing Signal Supply Air Hose
2	Decreasing Signal Supply Air Hose
3	90° Elbow
4	Cylinder
5	Lock Screw
6	Adjustment Screw
7	Washer
8	Cam
9	Cam Hub
10	Bypass Valve
11	Piston
12	Socket Head Cap Screw
13	Shaft Assembly
14	Compensator Lever
15	Set Screw
16	Spring Socket
17	Piston Rod
18	Packing Plate
19	Air Supply Manifold
20	Tubing (Signal Input)
21	Tubing (Air Supply)

Figure 3-1. Reverse Operation

2. Disconnect increasing signal supply air hose (1, Figure 3-1) from 90° elbow (3) at bottom of cylinder (4).

3. Disconnect decreasing signal supply air hose (2) from 90° elbow (3) at top of cylinder (4) and connect to 90° elbow at bottom of cylinder.

4. Connect increasing signal supply air hose (1) to upper cylinder 90° elbow (3).

5. Slowly open supply air shut off valve.

6. Slowly move piston to bottom of travel by increasing input signal and sending 100% signal pressure to power positioner.

7. Loosen set screw (15) securing spring socket (16) in place.

8. Turn spring socket (16) slowly clockwise until piston moves away from bottom of its travel.

9. Turn spring socket (16) slowly counterclockwise until piston just returns to bottom of travel.

10. Lock spring socket (16) in place by tightening set screw (15).

11. Using a grease pencil, make a reference mark on piston rod (17) at top of packing plate (18).

12. Slowly move piston to top of travel by decreasing input signal and sending 0% signal pressure to power positioner.

13. Measure distance from top of packing plate (18) to reference mark on piston rod (17) made in step 11.

14. If distance measured in step 14 is less than 5 inches, use the following procedure to calibrate piston travel.

    (a) Loosen lock screw (5) and adjustment screw (6).

    (b) Move cam (8) in slightly (about 1/64 inch).

    (c) Tighten adjustment screw (6) and lock screw (5). Repeat steps 13 and 14 as necessary to make total piston travel equal to 5 inches.

15. Observe piston travel while increasing input signal to 100%. Slowly decrease input signal to 0%. If piston reaches bottom of travel before input signal reaches 0%, use the following procedure to calibrate piston travel.

    (a) Loosen lock screw (5) and adjustment screw (6).

    (b) Pull cam (8) slightly outward (about 1/64 inch).

    (c) Tighten adjustment screw (6) and lock screw (5). Repeat step 15 as necessary to make piston reach bottom as signal input reaches 0%.

16. Remove increasing signal supply air hose (1) from 90° elbow (3) at top of cylinder (4).

17. Remove decreasing signal supply air hose (2) from 90° elbow (3) at bottom of cylinder (4) and to 90° elbow at top of cylinder.

18. Connect increasing signal supply air hose (1) to 90° elbow at bottom of cylinder (4).

19. Close bypass valve (10).

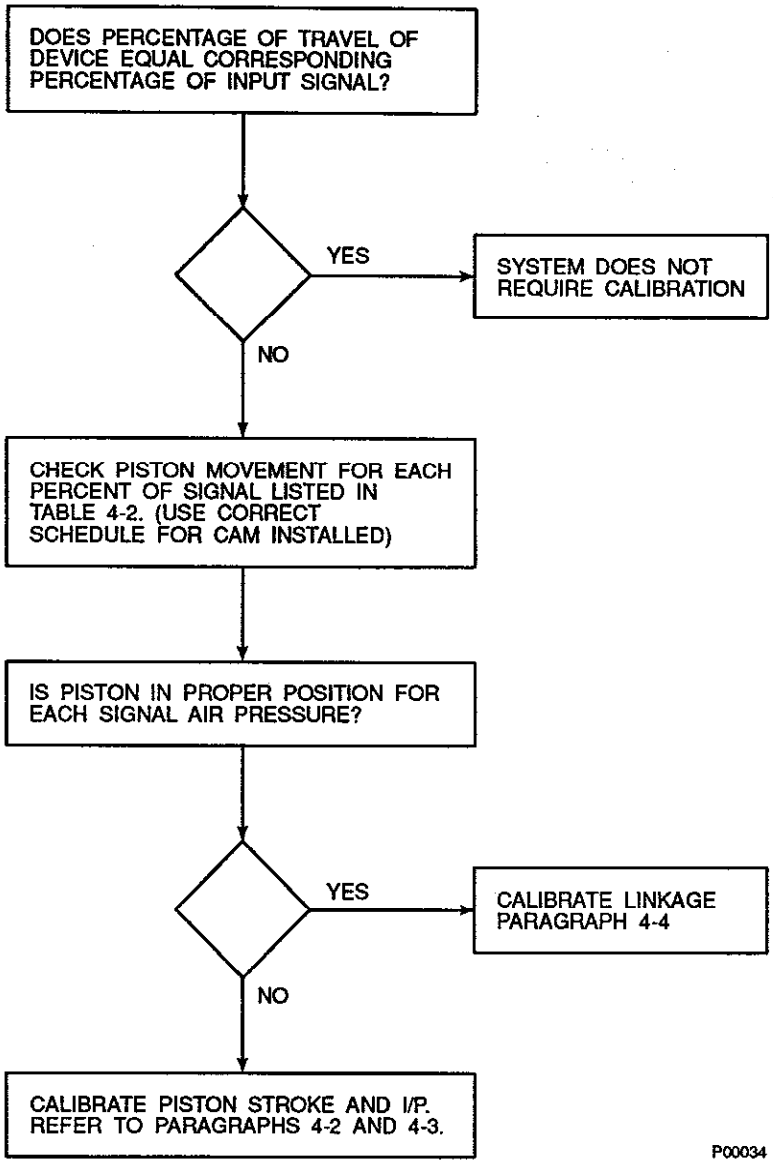

Figure 4-1. Calibration Flowchart

SECTION IV. CALIBRATION

4-1. CHECK POWER POSITIONER CALIBRATION. Use the following procedure to check calibration of power positioner. Figure 4-1, Calibration Flowchart, is provided as a quick reference guide.

NOTE

To perform the following calibration procedures, reference values for percent travel are needed. Values for linear, square root, and square outputs are provided in Table 4-1. Also a blank column for a characterized cam is provided. If cam was characterized, percent travel was recorded upon installation to complete calibration sequence. If percent travel was not recorded when cam was shaped, calibrate stroke of power positioner (paragraph 4-2), then refer to paragraph 2-6b.2 and perform procedure to shape cam. Record findings in Table 4-1.

a. Measure distance that controlled device's operating arm travels out from 0% signal air to 100% signal air. Record this value as total distance.

b. Set signal air to 0%.

c. Measure distance that controlled device's operating arm moves out from 0% signal air to 10% signal air. Divide measurement by total distance from step a. Record this as percentage output travel for 10% signal air.

d. Measure and record percentage of output travel for 20% to 100% in 10% increments and record as percentage output. This recorded data will be compared to reference data in Table 4-1.

e. Compare recorded readings with percent output desired in Table 4-1. Use respective columns for characterized systems, linear, squares root, or square cams. If recorded readings are equal to desired values, system does not need calibration. If recorded values do not equal desired values, continue checking procedure.

f. Set signal air to 0%.

g. Measure distance from top surface of packing cover to bottom edge of clevis head. Label this distance "A".

Table 4-1. Device Travel (%).

PERCENT SIGNAL AIR PRESSURE	PERCENT DRIVEN LEVER TRAVEL			
	LINEAR (x)	SQUARE ROOT ($\sqrt{x}$)	SQUARE (x^2)	CHARACTERIZED
0	0	0.0	0.0	
10	10	31.6	1.0	
20	20	44.8	4.0	
30	30	54.8	9.0	
40	40	63.25	16.0	
50	50	70.7	25.0	
60	60	77.5	36.0	
70	70	83.7	49.0	
80	80	89.4	64.0	
90	90	94.9	81.0	
100	100	100.0	100.0	

Table 4-2. Piston Travel (Stroke) Calibration Schedule.

INPUT SIGNAL					DESIRED STROKE	
0-60 psig (I/P)	3-15 psig	3-27 psig	0-30 psig	Percent of Signal	Inches	Percent of Full Stroke
CALIBRATION SCHEDULE "A" - LINEAR CAM						
0	3.0	3.0	0	0%	0.00	0%
6	4.2	5.4	3	10%	0.50	10%
12	5.4	7.8	6	20%	1.00	20%
18	6.6	10.2	9	30%	1.50	30%
24	7.8	12.6	12	40%	2.00	40%
30	9.0	15.0	15	50%	2.50	50%
36	10.2	17.4	18	60%	3.00	60%
42	11.4	19.8	21	70%	3.50	70%
48	12.4	22.2	24	80%	4.00	80%
54	13.8	24.6	27	90%	4.50	90%
60	15.0	27.0	30	100%	5.00	100%
CALIBRATION SCHEDULE "B" - SQUARE ROOT CAM						
0	3.0	3.0	0	0%	0.00	0.0%
6	4.2	5.4	3	10%	1.58	31.6%
12	5.4	7.8	6	20%	2.24	44.8%
18	6.6	10.2	9	30%	2.74	54.8%
24	7.8	12.6	12	40%	3.17	62.3%
30	9.0	15.0	15	50%	3.54	70.7%
36	10.2	17.4	18	60%	3.88	77.5%
42	11.4	19.8	21	70%	4.19	83.7%
48	12.4	22.2	24	80%	4.47	86.4%
54	13.8	24.6	27	90%	4.75	94.9%
60	15.0	27.0	30	100%	5.00	100.0%
CALIBRATION SCHEDULE "C" - SQUARE CAM						
0	0.0	3.0	0	0%	0.00	0%
6	4.2	5.4	3	10%	0.05	1%
12	5.4	7.8	6	20%	0.20	4%
18	6.6	10.2	9	30%	0.45	9%
24	7.8	12.6	12	40%	0.80	16%
30	9.0	15.0	15	50%	1.25	25%
36	10.2	17.4	18	60%	1.80	36%
42	11.4	19.8	21	70%	2.45	49%
48	12.4	22.2	24	80%	3.20	64%
54	13.8	24.6	27	90%	4.05	81%
60	15.0	27.0	30	100%	5.00	100%
CALIBRATION SCHEDULE "D" - CHARACTERIZED CAM						
0	3.0	3.0	0	0%		
6	4.2	5.4	3	10%		
12	5.4	7.8	6	20%		
18	6.6	10.2	9	30%		
24	7.8	12.6	12	40%		
30	9.0	15.0	15	50%		
36	10.2	17.4	18	60%		
42	11.4	19.8	21	70%		
48	12.4	22.2	24	80%		
54	13.8	24.6	27	90%		
60	15.0	27.0	30	100%		

h. Increase signal to 100%.

i. Measure distance from top surface of packing cover to bottom edge of clevis head. Label this distance "B".

j. Subtract distance "A" from distance "B". Record this as total piston travel.

k. Set signal air to 0%.

l. Send a 10% signal to power positioner.

m. Measure distance from top of packing cover to bottom of clevis head.

n. Subtract distance "A" from 10% signal and record this as piston travel for 10% signal air.

o. Measure and record piston travel for 20% to 100% signal air in 10% increments.

p. Compare actual piston movement with piston movement provided in Table 4-2. Use correct schedule for cam installed on power positioner. Schedule "A" is for power positioners with linear cams, schedule "B" is for square root cams, schedule "C" is for square cams, and schedule "D" is for a characterized cam. If actual piston movement is equal to piston movement provided, refer to paragraph 4-4 and calibrate linkage. If it is not equal, calibrate piston movement (paragraph 4-2). Calibrate I/P signal converter (paragraph 4-3).

4-2. STROKE CALIBRATION. Use the following procedure to adjust power positioner's piston movement (stroke).

a. Direct Acting Power Positioner.

WARNING

Before performing any maintenance, adjustment, or repair action on power positioner, shut off supply air, signal air, and any electrical signals to power positioner. Isolate power positioner from all systems connected to the power positioner. Severe injury or death may result from large torque power positioner is capable of producing, or from electrical shock.

1. Remove power positioner from service.

2. Purge supply air and signal air lines to remove water and debris.

3. Making sure bypass valve is closed, set signal air to 0%. Refer to Table 4-3 for percent to signal air pressure conversion.

4. Loosen set screw (1, Figure 4-2) securing spring socket (2) in place.

Table 4-3. Direct and Inverse Calibration Signal Pressures.

STROKE POSITION	POWER POSITIONER ACTION							
	DIRECT				INVERSE			
	PNEUMATIC			I/P	PNEUMATIC			I/P
	0-30 psig	3-15 psig	3-27 psig	0-60 psig	0-30 psig	3-15 psig	0-27 psig	0-60 psig
0%	0	3	27	0	30	15	3	60
100%	30	15	3	60	0	3	27	0

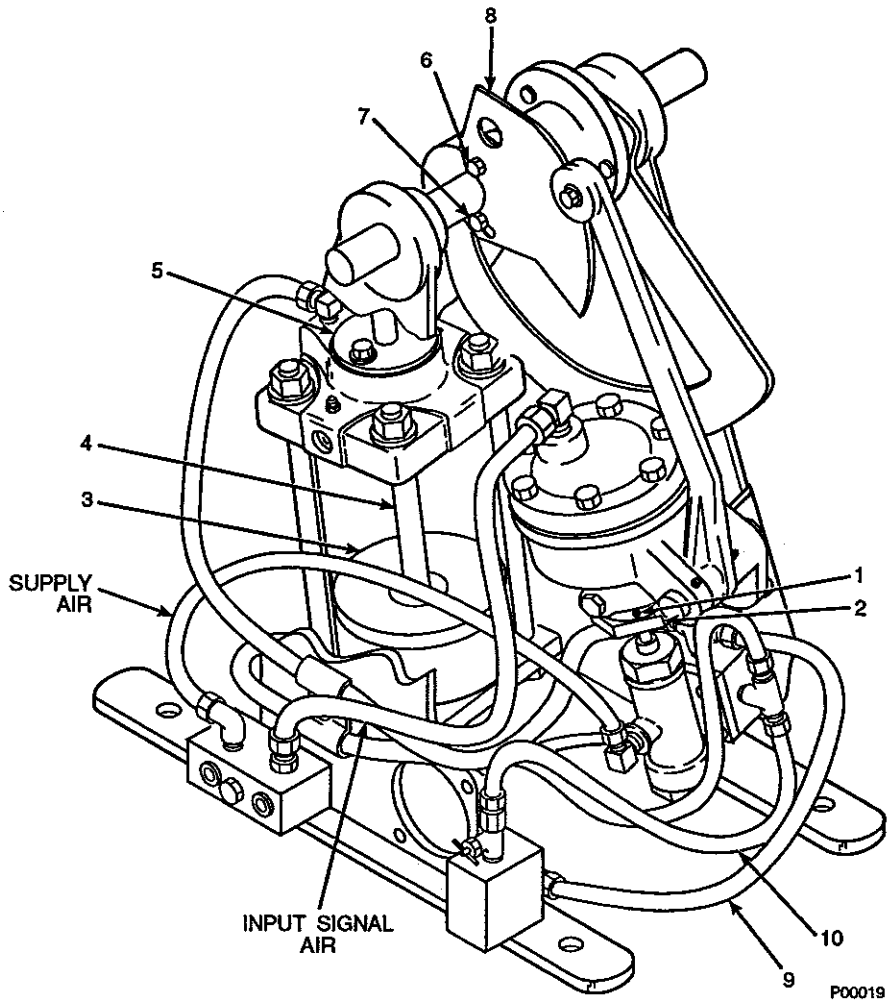

ITEM	DESCRIPTION
1	Set Screw
2	Spring Socket
3	Piston
4	Piston Rod
5	Packing Plate
6	Lock Screw
7	Adjustment Screw
8	Cam
9	Upper Bypass Tubing
10	Lower Bypass Tubing

Figure 4-2. Piston Stroke Calibration

5. Turn spring socket (2) slowly counterclockwise until piston (3) moves away from top of its travel.

6. Turn spring socket (2) slowly clockwise until piston (3) just returns to top of its travel.

7. Lock spring socket (2) in place by tightening set screw (1).

8. Slowly move piston (3) to bottom of travel by increasing input signal to 100%.

9. Using a grease pencil, make a reference mark on piston rod (4) at top of packing plate (5).

10. Slowly move piston to bottom of travel by increasing input signal to 0%.

11. Measure distance from top of packing plate (5) to reference mark on piston rod (4) made in step 9.

12. If distance measured in step 11 is not 5 inches, use the following procedure to calibrate piston travel.

    (a) Loosen lock screw (6) and adjustment screw (7). Move cam (8) in slightly (about 1/64 inch).

    (b) Retighten adjustment screw (7) and lock screw (6).

(c) Repeat steps 11 and 12 as necessary to make distance equal to 5 inches.

13. Observe piston travel while increasing input signal to 100% and then slowly decreasing input signal to 0%.

14. If piston reaches top of travel before input signal reaches 0%, use the following procedure to calibrate piston travel.

    (a) Loosen lock screw (6) and adjustment screw (7). Pull cam (8) slightly outward (about 1/64th inch).

    (b) Retighten adjustment screw (7) and lock screw (6).

    (c) Repeat steps 13 and 14 as necessary to make piston reach top of travel at same time as input signal reaches 0%.

b. **Reverse Acting Power Positioner.** For procedures to calibrate a reverse acting power positioner, refer to paragraph 3-2b.

4-3. **CURRENT TO PNEUMATIC SIGNAL CONVERTER (I/P) CALIBRATION.** Calibrate current to signal converter after mounting, changing mounted position, or when loss of control is noticed (refer to Troubleshooting, Section V). Use the following procedures to calibrate the signal converter (I/P).

a. Remove plastic caps from "Zero" and "Span" adjustment holes (Figure 4-3).

NOTE

Make sure input rating of power positioner is same as pressure rating of current to pneumatic signal converter.

b. Set input signal value to 4 mA (20 mA if I/P is in an inverse setup) and adjust "Zero" screw until output pressure is at 0 psig. Turn screw counter-clockwise to increase pressure, clockwise to decrease pressure. If output pressure does not change when screw is turned, turn screw counter-clockwise until pressure starts to rise.

c. Set signal value to 20 mA (4 mA if I/P is in an inverse setup).

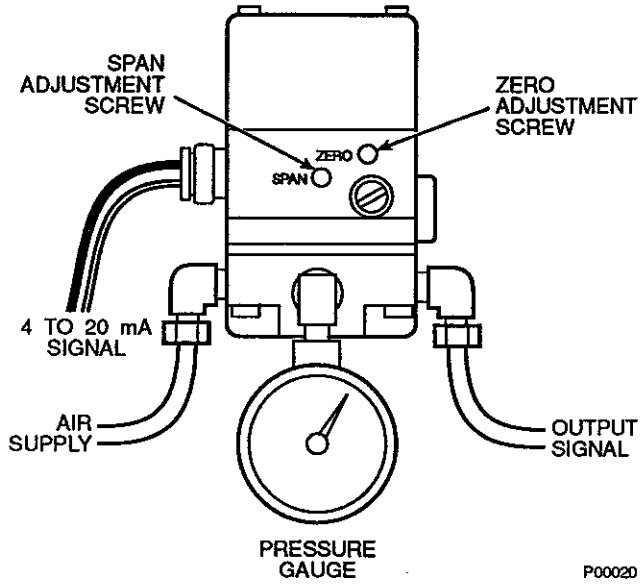

Figure 4-3. I/P Calibration

d. Adjust "Span" screw until output pressure is at 60 psig.

e. Repeat steps b and c until no further adjustment is needed.

f. Replace protective caps.

4-4. **LINKAGE CALIBRATION.**

a. **Linear.** Check angle of power positioner's drive lever from centerline. Compare this to angle of device's driven lever from centerline. If angular measurements are not equal, use the following procedure to adjust offset of power positioner's drive lever to equal offset of device's driven lever. When adjustment is complete, both operating lever and driven levers must be parallel with each other.

1. Measure angle β_1 from vertical centerline, to power positioner's drive lever centerline (Figure 4-4). This is power positioner's offset.

2. Measure angle β_2 from vertical centerline of device being controlled to driven lever centerline. This is driven lever's offset.

3. Compare angles β_1 and β_2. Adjust length of linkage for minor adjustments by threading pipe in or out of clevis. Change operating lever offset (β_1) for major adjustments.

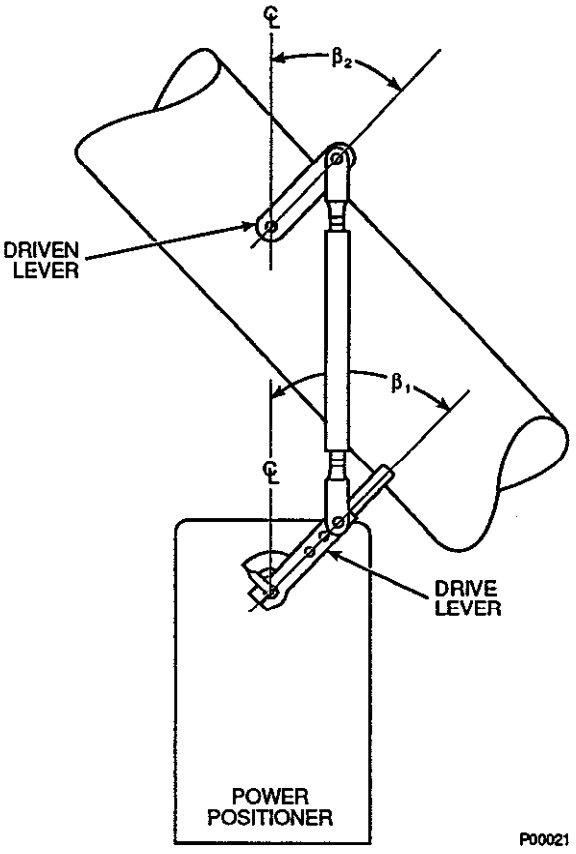

Figure 4-4. Linear Linkage Calibration

b. <u>Characterized</u>. Use installation plans to verify angles and lengths of actual installation. If installation plans for the linkage are unavailable, refer to paragraph 2-6b.1 for procedure to calculate correct angles and lengths. Use the following procedure to measure and adjust characterized linkage (Figure 4-5).

1. Measure angle β_1 from vertical centerline, to power positioner's operating lever (Figure 4-5). This is power positioner offset.

2. Measure angle β_2 from vertical centerline of device being controlled to driven lever. This is driven lever's offset.

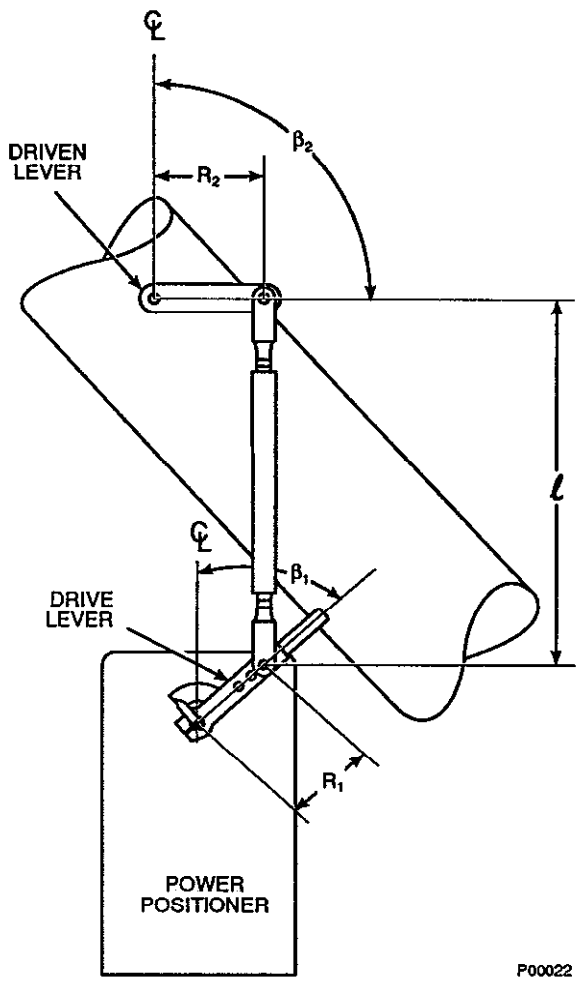

Figure 4-5. Characterized Linkage Calibration

3. Measure length (ℓ) between connecting levers at clevis.

4. Measure lengths of drive lever (R_1) and driven lever (R_2).

5. Compare angles β_1, β_2, distance (ℓ), and lengths R_1 and R_2 with design for your system. Adjust angles and linkage length as necessary. Adjust length of linkage (ℓ) by threading pipe in or out of clevis for minor adjustments, or changing operating arm angle β_1 for major adjustments.

SECTION V. TROUBLESHOOTING

5-1. **OVERVIEW.** Troubleshooting of common problems is provided for in troubleshooting chart (Table 5-1). The chart describes common problems, followed by the related probable cause, and finally, by what action is necessary to correct the defect. Figures 5-1 and 5-2 provide pneumatic schematics as an aid for troubleshooting pneumatic problems.

5-2. **TROUBLESHOOTING CHART.** Refer to Table 5-1.

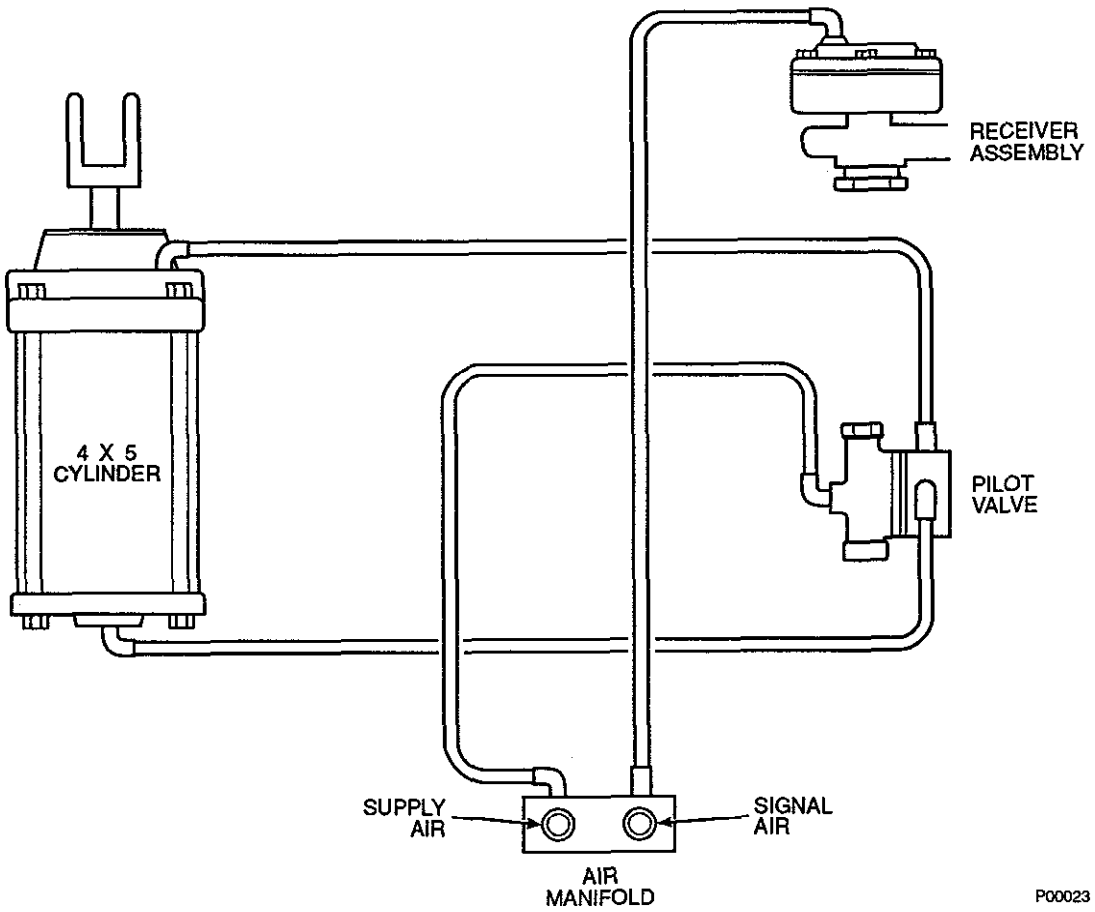

Figure 5-1. 4 X 5 Power Positioner Air Piping Schematic

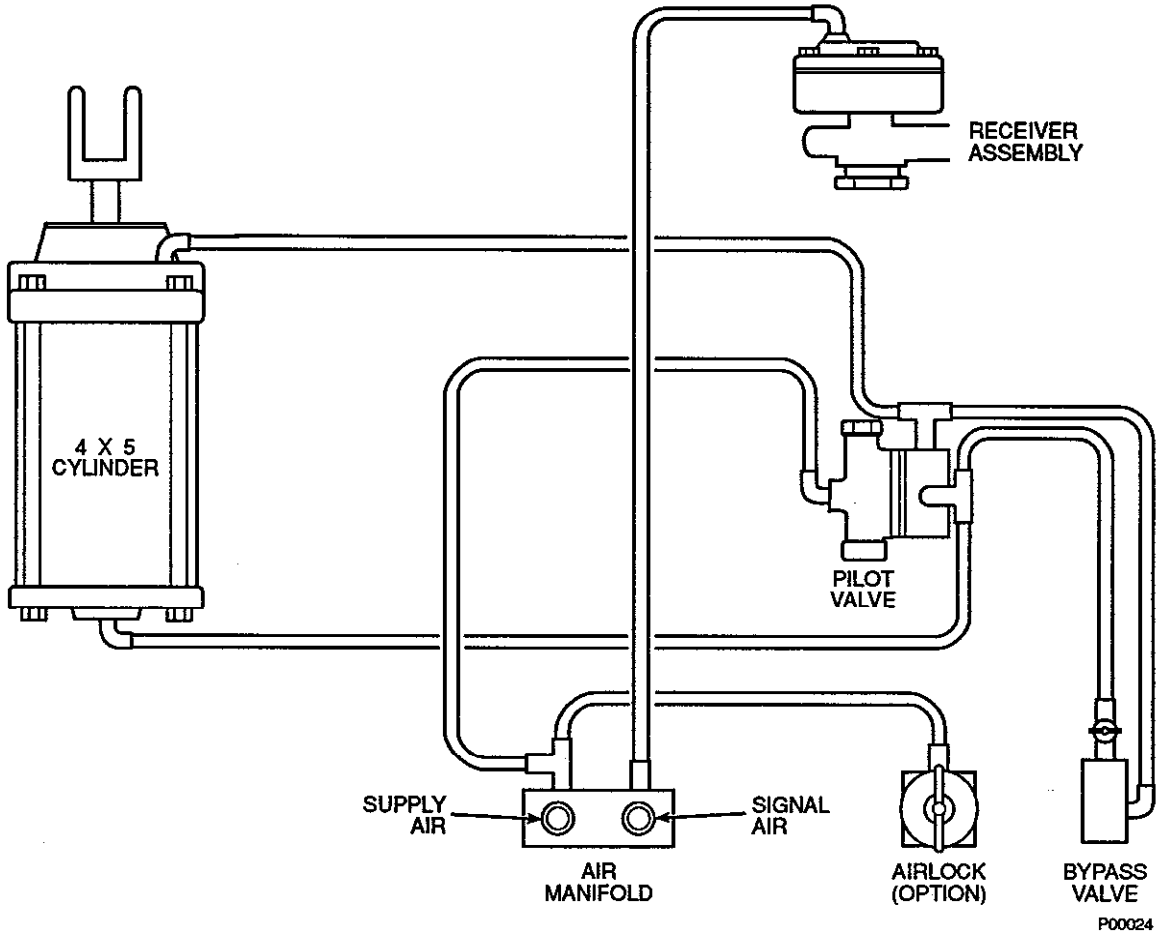

Figure 5-2. 4 X 5 Power Positioner Air Piping Schematic (with Bypass Valve and Air Lock)

Table 5-1. Troubleshooting Chart.

PROBLEM	CAUSE	CORRECTION
1. Erratic Operation	Pilot valve sticking	Clean or replace pilot valve. Refer to paragraph 6-4 for cleaning procedures and paragraph 7-2c for replacement procedures.
	Linkage binding or loose.	Linkage pivot joints corroded, dirty, or worn. Clean and lubricate or replace parts.
2. No response from power positioner to a signal air pressure change	Manual lock engaged	Disengage manual lock.
	Air supply shut-off valve closed	Open air supply valve.
	Ruptured receiver diaphragm	Replace diaphragm. Refer to paragraph 7-2d.
3. Power Positioner does not remain at setpoint, continues to cycle	Cylinder head gasket leak	Replace leaking gasket. Refer to paragraph 7-2e.
	By-pass valve air connection loose	Tighten or replace air connection.
	By-pass valve leaking internally.	Replace by-pass valve.
4. System over shoots or under shoots setpoint	I/P out of calibration	Calibrate I/P. Refer to paragraph 4-3.
	I/P failure	Replace I/P per paragraph 7-2b.
	Piston stroke travel not properly set	Calibrate piston stroke. Refer to paragraph 4-2.
	Cam bent	Replace cam. Refer to paragraph 7-2f.
	Pin hole in diaphragm	Replace diaphragm. Refer to paragraph 7-2d.
5. Sluggish operation	Air filter/separator full of water, oil, or sediment.	Drain air filter/separator. Refer to paragraph 6-5.
	Air filter dirty	Replace filter element. Refer to paragraph 7-2a.
	Ambient temperature is lower than the power positioner is designed for.	Install power positioner heater.
6. Power positioner operates normally but flow that is being controlled remains unchanged	Device being controlled has a broken valve stem or connection to the linkage.	Repair or replace controlled device.

SECTION VI. PERIODIC MAINTENANCE

6-1. **OVERVIEW.** This section describes preventive maintenance for the Rosemount Model PP405TR Power Positioner. Preventive maintenance is necessary at specific intervals to reduce wear and tear on the power positioner.

WARNING

Before performing any maintenance or repair action on power positioner, shut off supply air, signal air, and any electrical supply or electronic signals to power positioner. Isolate power positioner from all systems connected to the power positioner. Severe injury or death may result from large torque power positioner is capable of producing, or from electrical shock.

6-2. **MAINTENANCE SCHEDULE.** Use the maintenance schedule, Table 6-1, as a guideline for preventive maintenance. The frequency of this maintenance varies directly with plant conditions and operational load. Extremely dusty conditions or high temperatures will require more frequent maintenance to the power positioner.

WARNING

Clean power positioner in a well ventilated area. Avoid inhalation of solvent fumes and prolonged exposure of skin to cleaning solvent. Follow all instructions on the Material Safety Data Sheet (MSDS) of the solvent being used. Severe injury or death may result from improper use.

6-3. **GENERAL CLEANING AND LUBRICATION.** Clean power positioner's exterior of all grease build up with commercial dry cleaning solvent. To lubricate power positioner, use McLube MoS_2-793 or equivalent and refer to Figure 6-1, Lubrication Chart. McLube MoS_2-793 can be purchased from Rosemount Analytical Inc. (part #183512) or directly from the manufacturer:

McGee Industries, Inc.
9 Crozerville Rd.
Aston, PA 19014

6-4. **PILOT VALVE CLEANING AND INSPECTION.** In normal service, pilot valve assembly requires cleaning and inspection at intervals of approximately six months, or upon any indication of sticking.

WARNING

Before performing any maintenance or repair action on power positioner, shut off supply air, signal air, and any electrical supply or electronic signals to power positioner. Isolate power positioner from all systems connected to the power positioner. Severe injury or death may result from large torque power positioner is capable of producing, or from electrical shock.

a. Remove power positioner from service.

6

Table 6-1. Maintenance Schedule.

TIME INTERVAL (Approximate)	MAINTENANCE ACTION
6 months	Perform general cleaning and lubrication. Refer to paragraph 6-3.
6 months	Clean and inspect pilot valve. Refer to paragraph 6-4.
6 months	Clean and drain air filters. Refer to paragraph 6-5.
2 years	Clean and inspect diaphragm. Refer to paragraph 6-6.
2 years	Lubricate and clean cylinder and piston assemblies. Refer to paragraph 6-7.

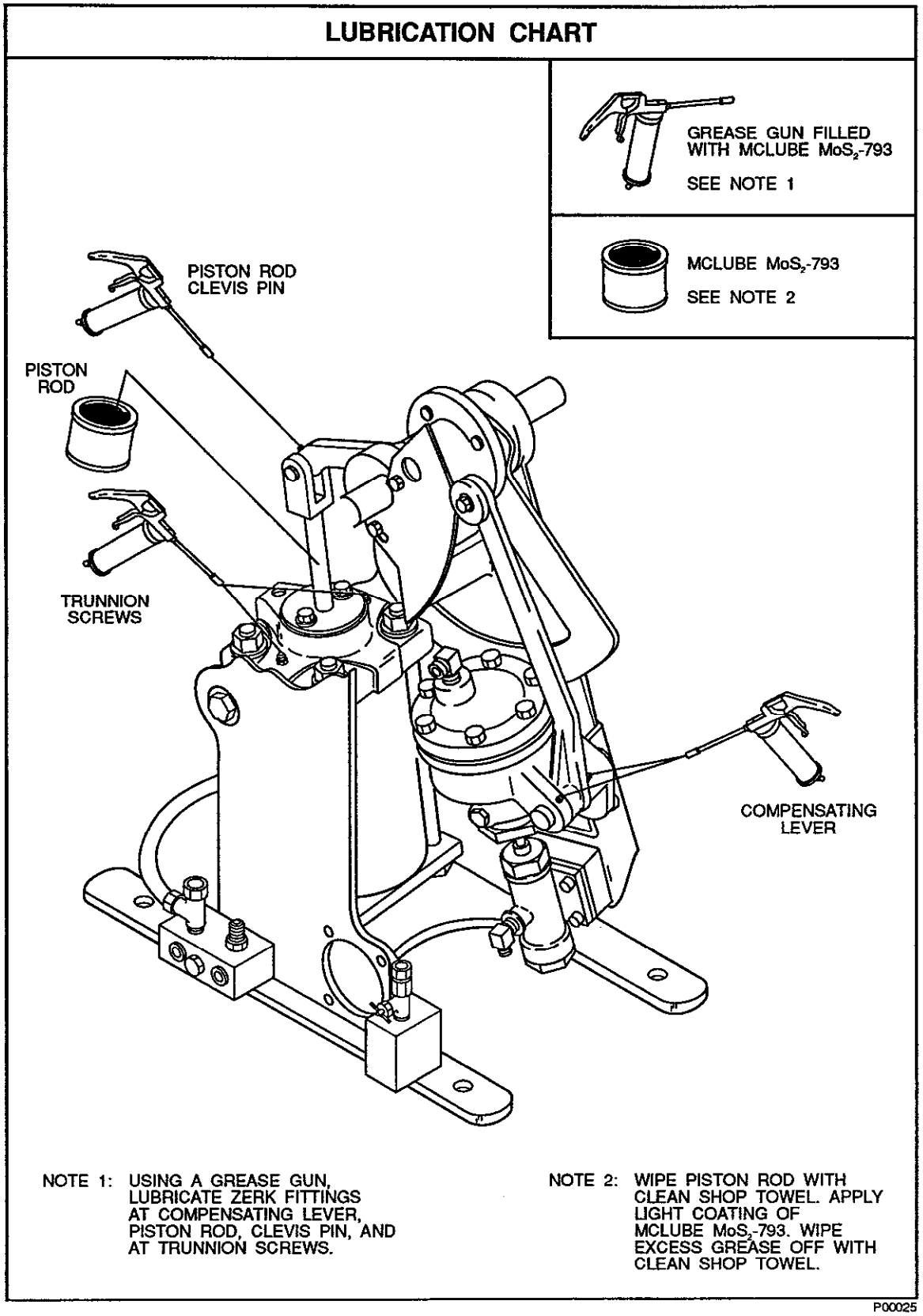

Figure 6-1. Lubrication Chart

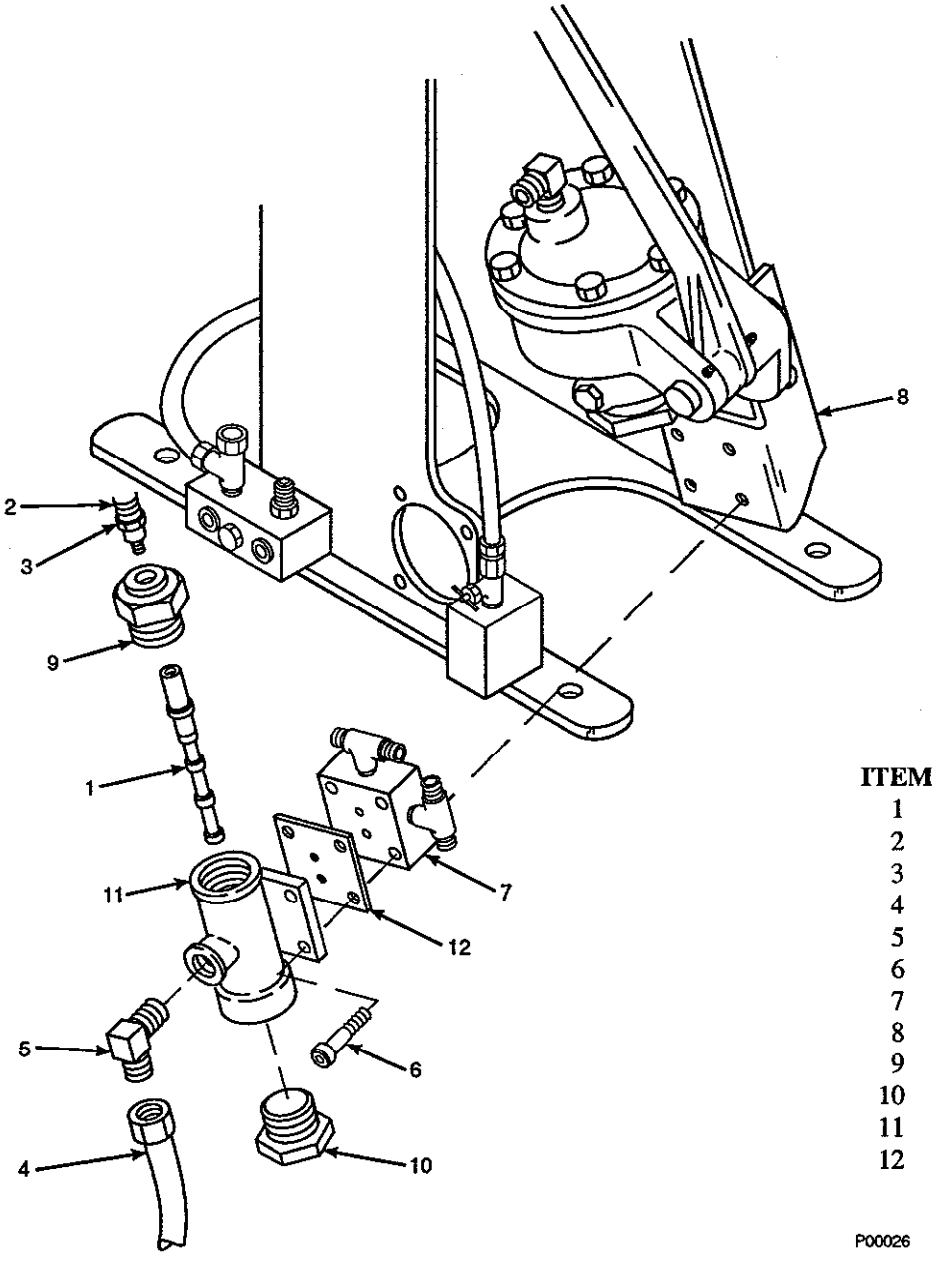

ITEM	DESCRIPTION
1	Stem Assembly
2	Connecting Link
3	Ball Socket Nut
4	Air Supply Tubing
5	Elbow
6	Socket Head Cap Screw
7	Manifold
8	Stand Assembly
9	Valve Cap
10	Exhaust Silencer Plug
11	Pilot Valve Body
12	Pilot Valve Gasket

P00026

Figure 6-2. Pilot Valve Exploded View

b. Carefully hold upper end of pilot valve's stem assembly (1, Figure 6-2). Free connecting link (2) from pilot valve stem by turning connecting link's ball socket nut (3) counterclockwise.

c. Disconnect air supply tubing (4) from elbow (5).

d. Remove socket head cap screws (6) that secure pilot valve body (11) and manifold (7) to stand assembly (8). Remove pilot valve and manifold.

CAUTION

Do not use an abrasive for cleaning valve stem assembly or valve body. Abrasive, even as fine as crocus cloth, will cause scratches in stem assembly and air leakage by pilot valve stem assembly.

e. Remove valve cap (9), stem assembly (1), and exhaust silencer plug (10) from pilot valve body (11).

WARNING

Clean pilot valve in a well ventilated area. Avoid inhalation of solvent fumes and prolonged exposure of skin to cleaning solvent. Follow all instructions on the Material Safety Data Sheet (MSDS) of the solvent being used. Severe injury or death may result from improper usage.

f. Thoroughly clean pilot valve body (11), valve cap (9), and stem assembly (1) in commercial dry cleaning solvent or equivalent. Allow pilot valve to completely air dry. Do not use abrasive of any kind on stem.

g. Thoroughly clean exhaust silencer plug (10) with commercial dry cleaning solvent or equivalent, making sure its exhaust ports are open.

NOTE

Pilot valve stem and body are a matched set. If either is damaged or worn to a non-serviceable condition, entire pilot valve must be replaced.

h. Inspect stem assembly (1) and pilot valve body (11). If any signs of wear or damage are found, replace pilot valve.

i. Install stem assembly (1) into valve body (11).

j. Install exhaust silencer plug (10) and valve cap (9) on pilot valve body (11).

k. Install manifold (7) and assembled pilot valve with pilot valve gasket (12) onto stand assembly (8), securing with socket head cap screws (6).

l. Carefully hold upper end of pilot valve's stem assembly (1). Attach connecting link (2) to pilot valve's stem assembly (1) by turning connecting link's ball socket nut (3) clockwise.

m. Calibrate stroke of power positioner (paragraph 4-2).

n. Return power positioner to service.

6-5. AIR FILTER CLEANING AND DRAINING. In normal service, supply air filter and signal air filter/regulator require draining of water and debris at least every 6 months. The frequency of this maintenance will depend on supply system air quality. After installation, drain both filters by slowly opening filter and filter/regulators petcock valves. Initially drain monthly, gradually increasing time between draining. Schedule periodic draining when filters are approximately 1/4 full. Continue draining water and debris at this interval unless plant supply air conditions change. If element in air filter is dirty, refer to Section VII for replacement procedure.

6-6. DIAPHRAGM CLEANING AND INSPECTION. Disassemble, clean, and inspect diaphragm assembly approximately every two years or if power positioner is not reaching set points. Refer to Figure 6-3 and use the following procedure.

WARNING

Before performing any maintenance or repair action on power positioner, shut off supply air, signal air, and any electrical supply or electronic signals to power positioner. Isolate power positioner from all systems connected to the power positioner. Severe injury or death may result from large torque power positioner is capable of producing, or from electrical shock.

a. Remove power positioner from service.

b. Remove hex head cap screw (1, Figure 6-3) and washers (2) securing diaphragm cover (3) to receiver body (4).

c. Remove zero balance spring (5) from top of diaphragm.

d. Using a clean shop towel, thoroughly wipe off any dirt or debris on upper side of diaphragm (6).

e. Visually inspect diaphragm. Replace if nicks, cuts, or hardened rubber areas (from excess heat) are visible. Refer to Section VII for replacement procedures.

f. Clean diaphragm cover (3) and zero balance spring (5) with commercial dry cleaning solvent and allow to air dry.

g. Align edges of diaphragm (6) with stop ring (7) to make an air tight seal.

h. Replace zero balance spring (5).

ITEM	DESCRIPTION
1	Hex Head Cap Screw
2	Washer
3	Diaphragm Cover
4	Receiver Body
5	Zero Balance Spring
6	Diaphragm
7	Stop Ring

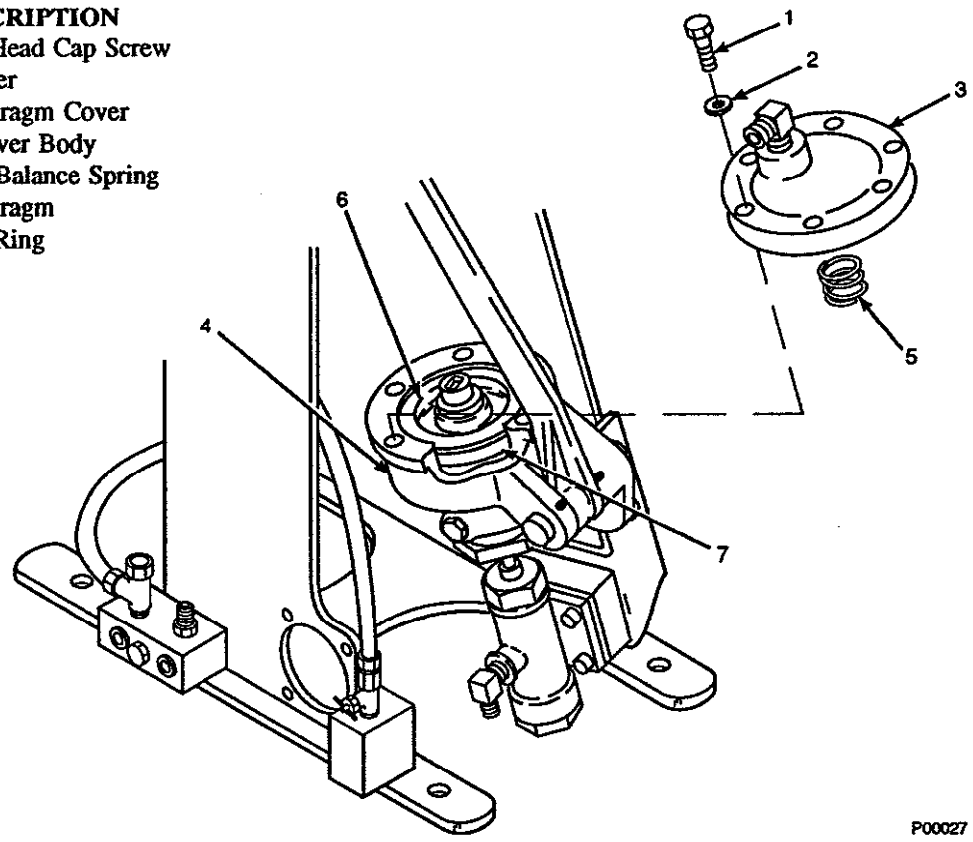

Figure 6-3. Diaphragm Exploded View

i. Making sure the diaphragm is not folded or pinched, replace diaphragm cover (3) and align sealing edge of diaphragm cover on top of diaphragm.

j. Secure diaphragm cover (3) with socket head cap screws (1) and washers (2). Tighten all screws hand tight. Then snug screws down and finally, complete installation by tightening in a diagonal sequence. Torque screws to 11 foot-lbs (1.52 kg-m).

k. Test for air leakage around diaphragm cover and receiver body. Use a leak detector, such as "snoop", and apply an air signal to power positioner. If leak is detected, repair as necessary.

l. Return power positioner to service.

6-7. CYLINDER AND PISTON, CLEANING AND LUBRICATION. Disassemble, clean and lubricate piston and cylinder assembly approximately every two years. Refer to Figure 6-4 and use the following procedure.

WARNING

Before performing any maintenance or repair action on power positioner, shut off supply air, signal air, and any electrical supply or electronic signals to power positioner. Isolate power positioner from all systems connected to the power positioner. Severe injury or death may result from large torque power positioner is capable of producing, or from electrical shock.

a. Remove power positioner from service.

b. Shut supply air valve and set signal air pressure to 0 psig. Open bypass valve.

WARNING

Residual air must be bled off of cylinder before removal of cylinder head. If air is not bled off, eye injury may result.

c. Bleed residual air through pilot valve supply air connection.

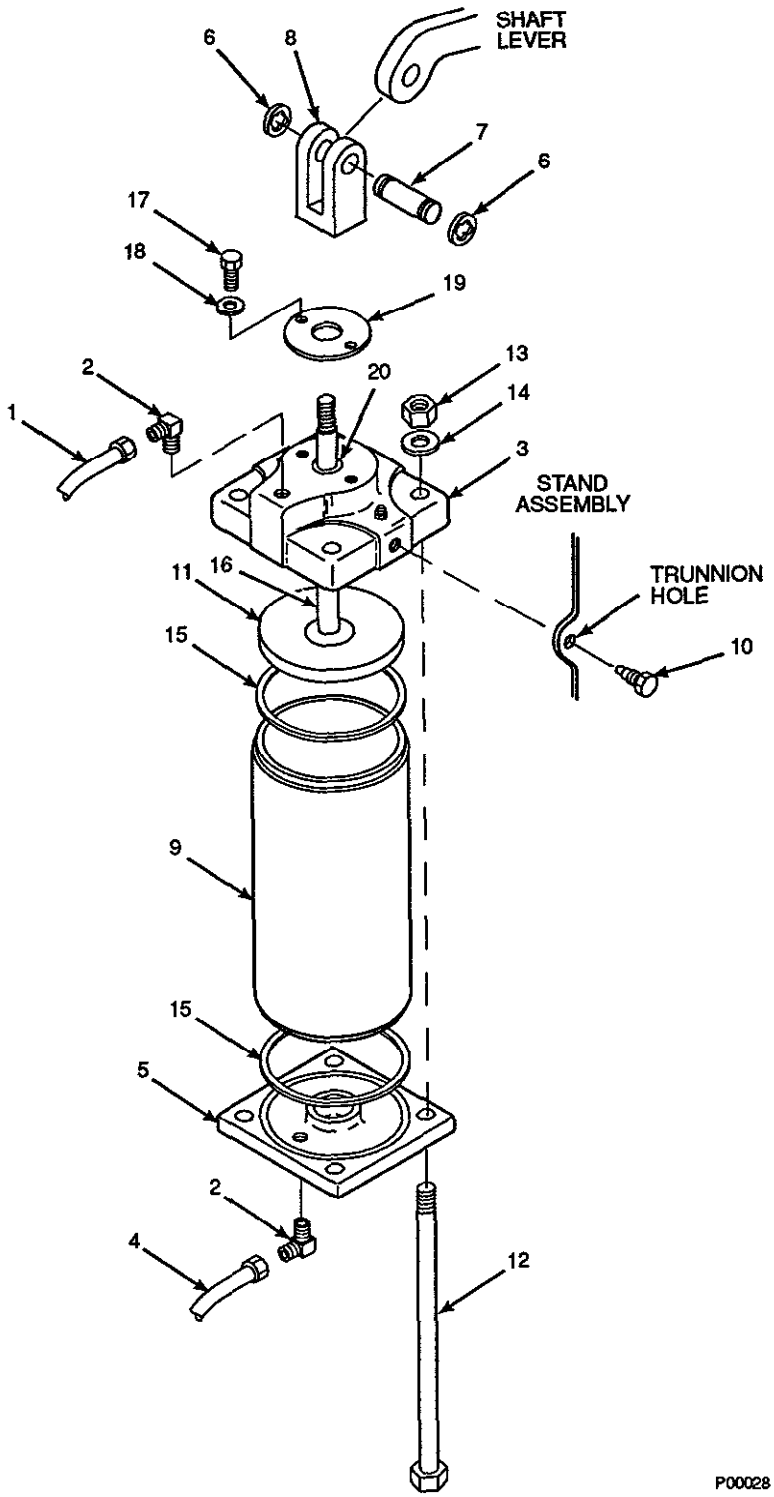

ITEM	DESCRIPTION
1	Increasing Signal Supply Air Hose
2	90° Elbow
3	Upper Cylinder Head
4	Decreasing Signal Supply Air Hose
5	Lower Cylinder Head
6	Retaining Ring
7	Clevis Pin
8	Clevis Head
9	Cylinder
10	Trunnion Screw
11	Piston
12	Tie Bolt
13	Hex Nut
14	Washer
15	Head Gasket
16	Piston Rod
17	Hex Head Cap Screw
18	Washer
19	Packing Cover
20	Female Adaptor

Figure 6-4. Cylinder Exploded View

Note

This procedure and Figure 6-4 are set up for direct acting power positioners. In a reverse acting power positioner, increasing signal supply air hose (1, Figure 6-4) would be at bottom of cylinder and decreasing signal supply air hose (4) would be at top of cylinder.

d. Remove increasing signal supply air hose (1, Figure 6-4) from 90° elbow (2) at upper cylinder head (3). Mark supply hose (1) "upper".

e. Remove decreasing signal supply air hose (4) from 90° elbow (2) at lower cylinder head (5). Mark supply hose (1) "lower".

f. Remove retaining rings (6) and drive out clevis pin (7) from clevis head (8).

g. While supporting cylinder (9), remove trunnion screws (10).

h. Remove assembled cylinder from trunnion and move it to a workbench to continue disassembly.

CAUTION

Do not scratch piston rod. Use caution when removing and handling upper cylinder head, piston, and piston rod. If piston rod is scratched, power positioner will produce lower torque and decreased packing life will result.

i. Remove hex nuts (13), washers (14) and tie bolts (12).

CAUTION

Do not pull piston and shaft assembly out of cylinder head. Damage to packing gland bushings and Vee-packing may occur.

j. Remove upper cylinder head (3) from cylinder by sliding piston (11) out of cylinder (9).

k. Remove and discard upper and lower cylinder head gaskets (15).

l. Clean old grease off piston (11) and piston rod (16). Wipe with commercial grade dry cleaning solvent and let air dry. Pack concave area of piston with McLube MoS_2-793 type grease or equivalent. Lightly coat piston rod (16) with Mclube MoS_2-793 grease. Wipe excess grease off with clean shop towel.

m. With a clean shop towel and commercial grade dry cleaning solvent, wipe interior surface of cylinder (9). Allow to air dry before assembly.

n. Remove hex head cap screws (17) and washers (18), securing packing cover (19) to upper cylinder head (3). Remove packing cover (19) from upper cylinder head.

o. Clean and inspect female adaptor (20) under packing cover (19). Replace female adaptor, packing, and male adaptor if female adaptor appears damaged or was leaking. Refer to Section VII for replacement procedures.

p. Pack area around female adaptor (20) with McLube MoS_2-793 grease or equivalent. Secure packing cover (19) to upper cylinder head (3) with hex head cap screws (17).

q. Install tie bolts (12) through lower cylinder head (5).

r. Install cylinder (9) with a new cylinder head gasket (15) onto lower cylinder head (5).

s. Place new upper cylinder head gasket (15) on top of cylinder. Making sure both gaskets are in place, slide piston (11) and upper cylinder head assembly onto cylinder (9). Align tie bolts through upper cylinder head (3) holes and secure with hex nuts (13). Tighten hex nuts evenly using a diagonal tightening sequence.

t. Install cylinder assembly onto power positioner frame by aligning upper cylinder head (3) mounting holes with trunnion holes in stand assembly. Secure cylinder in stand with trunnion screws (10).

u. Secure clevis (8) to shaft lever with clevis pin (7). Secure clevis pin with retaining rings (6).

v. Install supply hose marked "upper" (1) to 90° elbow (2) at upper cylinder head (3). Install supply hose marked "lower" (4) to 90° elbow at lower cylinder head (5).

w. Refer to paragraph 4-2 and calibrate power positioner stroke. Return power positioner to service.

SECTION VII. CORRECTIVE MAINTENANCE

7-1. **OVERVIEW.** This section describes corrective maintenance for the Rosemount PP405TR Power Positioner. If specific cause of problem is not known, refer to Section V, Troubleshooting. Spare parts referred to are available from Rosemount. Refer to Section VIII of this manual for part numbers and ordering information.

WARNING

Before performing any maintenance or repair action on power positioner, shut off supply air, signal air, and any electrical supply or electronic signals to power positioner. Isolate power positioner from all systems connected to the power positioner. Severe injury or death may result from large torque power positioner is capable of producing, or from electrical shock.

7-2. **PARTS REPLACEMENT.**

a. Air Filter. Regularly inspect disposable filter element as needed, according to plant air supply quality. If filter element needs to be replaced, new elements are available from the factory. Use the following procedure to replace filter element.

1. Remove power positioner from service and close supply air shut off valve.
2. Open air filter's drain valve (1, Figure 7-1) and bleed off any air pressure and moisture remaining in system.
3. Remove air filter's sump (2) by removing cap nut (3) and cap nut gasket (4) on top of air filter. Save cap nut gasket for installation.
4. Remove used filter element (5) by grasping and pulling it downward.
5. Install new filter element (5).
6. Install air filter sump (2) into filter housing (6). Secure sump with cap nut (3) and cap nut gasket (4).
7. Open supply air shut off valve and check for leaks.
8. Return system to service.

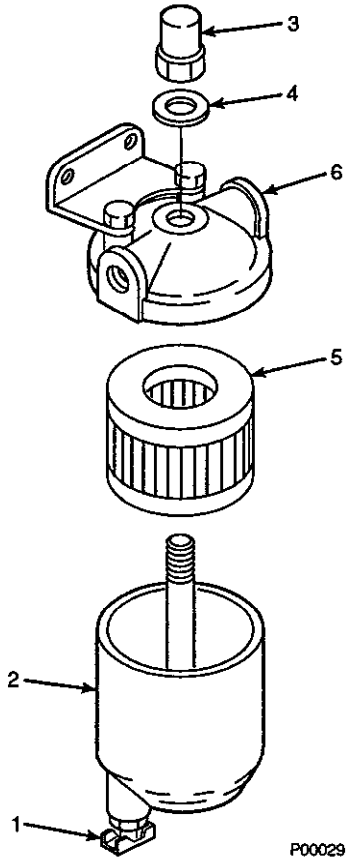

ITEM	DESCRIPTION
1	Drain Valve
2	Sump
3	Cap Nut
4	Cap Nut Gasket
5	Filter Element
6	Filter Housing

Figure 7-1. Air Filter

b. I/P Converter. Use the following procedure for replacement of the current to pneumatic signal converter (I/P).

WARNING

Before performing any maintenance or repair action on power positioner, shut off supply air, signal air, and any electrical supply or electronic signals to power positioner. Isolate power positioner from all systems connected to the power positioner. Severe injury or death may result from large torque power positioner is capable of producing, or from electrical shock.

1. Remove power positioner from service.
2. Turn electrical signal transmitter off, making sure no electrical voltage or current is being applied to the I/P.
3. Bleed off any residual air pressure through connection of signal tubing to I/P.
4. Remove inlet and outlet piping to I/P.
5. Remove input signal leads from I/P's screw terminals. If screw terminals are not installed on I/P, remove I/P pigtails from screw terminals.
6. Remove screws securing old I/P converter to mounting bracket and discard I/P.
7. Attach inlet and outlet piping to respective ports on I/P.
8. Connect leads to electrical signal wires. For direct acting power positioners, connect positive signal to I/P's black lead and negative signal to white lead. For reverse acting power positioners, connect positive lead to I/P's white signal and negative lead to black signal.
9. Install new I/P to same mounting location, securing with old hardware.
10. Open supply air valves and test for leaks using a "snoop" type leak detector.
11. Calibrate I/P and return unit to service. Refer to paragraph 4-3 for calibration procedures.

c. Pilot Valve. Use the following procedure to replace the pilot valve.

WARNING

Before performing any maintenance or repair action on power positioner, shut off supply air, signal air, and any electrical supply or electronic signals to power positioner. Isolate power positioner from all systems connected to the power positioner. Severe injury or death may result from large torque power positioner is capable of producing, or from electrical shock.

1. Remove power positioner from service.
2. Carefully hold upper end of pilot valve's stem assembly (1, Figure 7-2). Turn connecting links ball socket nut (3) counterclockwise and free connecting link (2) from pilot valve stem assembly.
3. Disconnect supply air tubing (4) from elbow (5).
4. Remove socket head cap screws (6) that secure pilot valve (7) and manifold (8) to stand assembly (9). Remove pilot valve and manifold.
5. Install new pilot valve (7), pilot valve gasket (10), and manifold (8) onto stand assembly (9).
6. Attach supply air tubing (4) to elbow (5). Open supply air shut off valve and test for leaks using a "snoop" type leak detector. Close supply air valve.
7. Carefully hold upper end of new pilot valve's stem assembly (1). Attach stem assembly to connecting link (2) by turning connecting link's ball socket nut (3) clockwise.
8. Refer to paragraph 4-2 and calibrate stroke of power positioner.
9. Return power positioner to service.

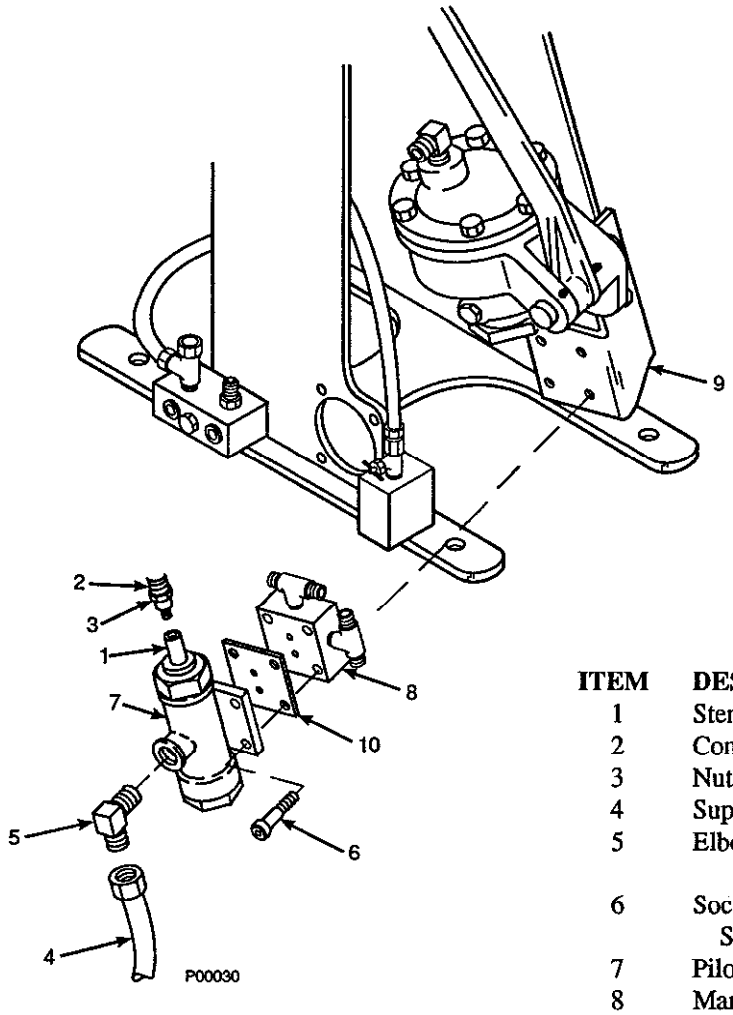

ITEM	DESCRIPTION	PART NUMBER
1	Stem Assembly	6639-003
2	Connecting Link	7791-021
3	Nut	
4	Supply Air Tubing	6292A08H12
5	Elbow	771B867H05 (Brass) 771B868H05 (Stainless Steel)
6	Socket Head Cap Screws	70041AH055
7	Pilot Valve	3531B17G01
8	Manifold	152168
9	Stand Assembly	6631D53G01
10	Pilot Valve Gasket	5057-002

Figure 7-2. Pilot Valve

d. Diaphragm and Calibration Spring. Use the following procedure for replacement of the receivers diaphragm and replacement of the calibration spring.

WARNING

Before performing any maintenance or repair action on power positioner, shut off supply air, signal air, and any electrical supply or electronic signals to power positioner. Isolate power positioner from all systems connected to the power positioner. Severe injury or death may result from large torque power positioner is capable of producing or from electrical shock.

1. Remove power positioner from service.
2. Disconnect signal air tubing (2, Figure 7-3) and remove 90° elbow (1).
3. Remove hex head cap screws (3) and washers (4) securing diaphragm cover (5) to receiver body (25).
4. Remove zero balance spring (6) from top of diaphragm.
5. Carefully hold upper end of pilot valves stem assembly (26). Turn connecting links lower ball socket nut (14) counterclockwise and free connecting link (13) from pilot valve stem assembly.

6. Pulling up on diaphragm (8), remove diaphragm and connecting link assembly from receiver body.

7. Remove calibration spring (21).

8. Install new calibration spring (21). Make sure spring washer (22) is in bottom of spring socket (20).

9. Remove connecting link (13) from diaphragm by turning upper ball socket nut (12) counterclockwise.

10. Remove spring nut (11) from diaphragm stud (7). Separate diaphragm (8), stop ring (9), and shield (10).

11. Assemble new diaphragm (8) with stop ring (9) and shield (10). Secure in place with diaphragm stud (7) and spring nut (11).

12. Install connecting link (13) on new diaphragm assembly securing with upper ball socket nut (12).

13. Place diaphragm assembly and connecting link in receiver so connecting link is aligned with pilot valve stem assembly (26).

14. Align edges of diaphragm (8) with stop ring (9) to make an air tight seal.

15. Place zero balance spring (6) on top of diaphragm (8).

16. Making sure diaphragm is not folded or pinched, replace diaphragm cover (5) and align sealing edge of diaphragm cover on top edge of diaphragm.

17. Secure diaphragm cover (5) to receiver body (25) with hex head cap screws (3) and washers (4). First tighten screws until hand tight. Then snug screws down and finally complete tightening in a diagonal pattern. Torque to 11 foot-lbs (1.52 kg-m).

18. Carefully hold upper end of pilot valve stem assembly (26). Turn connecting link's lower ball socket nut (14) clockwise and secure connecting link (13) to pilot valve stem assembly.

19. Reinstall 90° elbow (1) and signal air tubing (2).

20. Test for leakage around diaphragm cover and receiver body. Use a leak detector such as "snoop", and send an air pressure signal to power positioner. If leak is detected, repair as necessary.

21. Refer to paragraph 4-2 and calibrate stroke of power positioner.

22. Return power positioner to service.

e. Cylinder. Use the following procedure to disassemble and reassemble the power cylinder on model PP405TR power positioner. Replace items that are damaged or worn beyond a serviceable condition determined by troubleshooting or by inspection. Replace cylinder head gaskets each time cylinder is disassembled.

WARNING

Before performing any maintenance or repair action on power positioner, shut off supply air, signal air, and any electrical supply or electronic signals to power positioner. Isolate power positioner from all systems connected to the power positioner. Severe injury or death may result from large torque power positioner is capable of producing, or from electrical shock.

1. Remove power positioner from service.

2. Shut supply air valve and set signal air pressure to 0 psig. Open bypass valve.

WARNING

Residual air must be bled off of cylinder before removal of cylinder head. If air is not bled off, eye injury may result.

3. Bleed residual air through pilot valve supply air connection.

ITEM	DESCRIPTION	PART NUMBER
1	90° Elbow	771B869H04
2	Signal Air Tubing	6292A04H03
3	Hex Head Cap Screw	70100DX04K
4	Washer	70520BP10P
5	Diaphragm Cover	252228
6	Zero Balance Spring	175464-348
7	Diaphragm Stud	142374
8	Diaphragm	9351-007
9	Stop Ring	5014-019
10	Shield	5015-027
11	Spring Nut	5015-14
12	Upper Ball Socket Nut	
13	Connecting Link	7791-021
14	Lower Ball Socket Nut	
15	Compensator Lever	352222
16	Roller	142033
17	Trunnion Screw	5015-015
18	Trunnion	5015-007
19	Set Screw	70020BA63J
20	Spring Socket	5015-014
21	Calibration Spring	Refer to Section 9
22	Spring Washer	5973-007
23	Hex Head Screw	70100DX0CK
24	Washer	70520BP10S
25	Receiver Body	241762
26	Pilot Valve Stem Assembly	6693-001

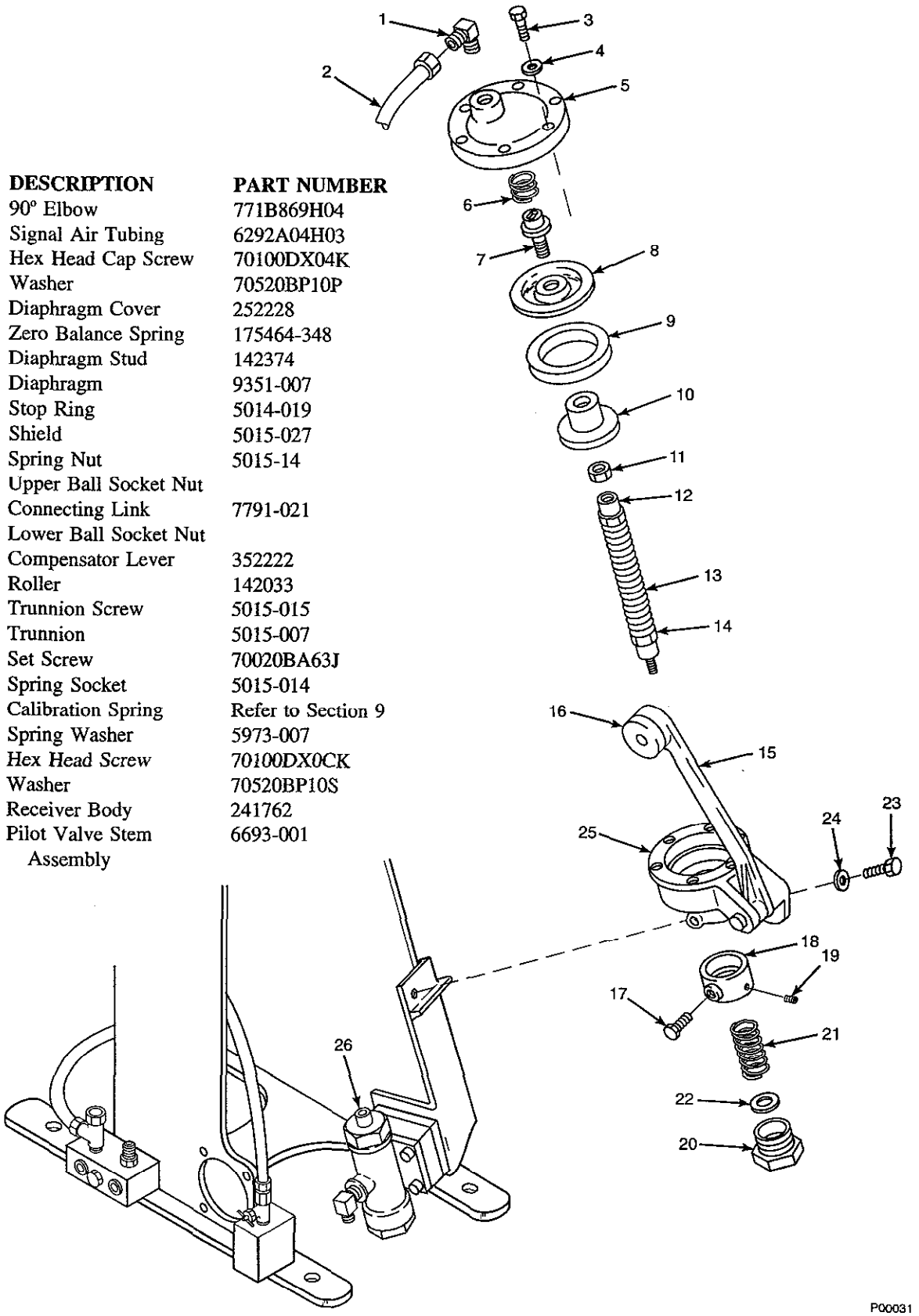

Figure 7-3. Receiver Exploded View

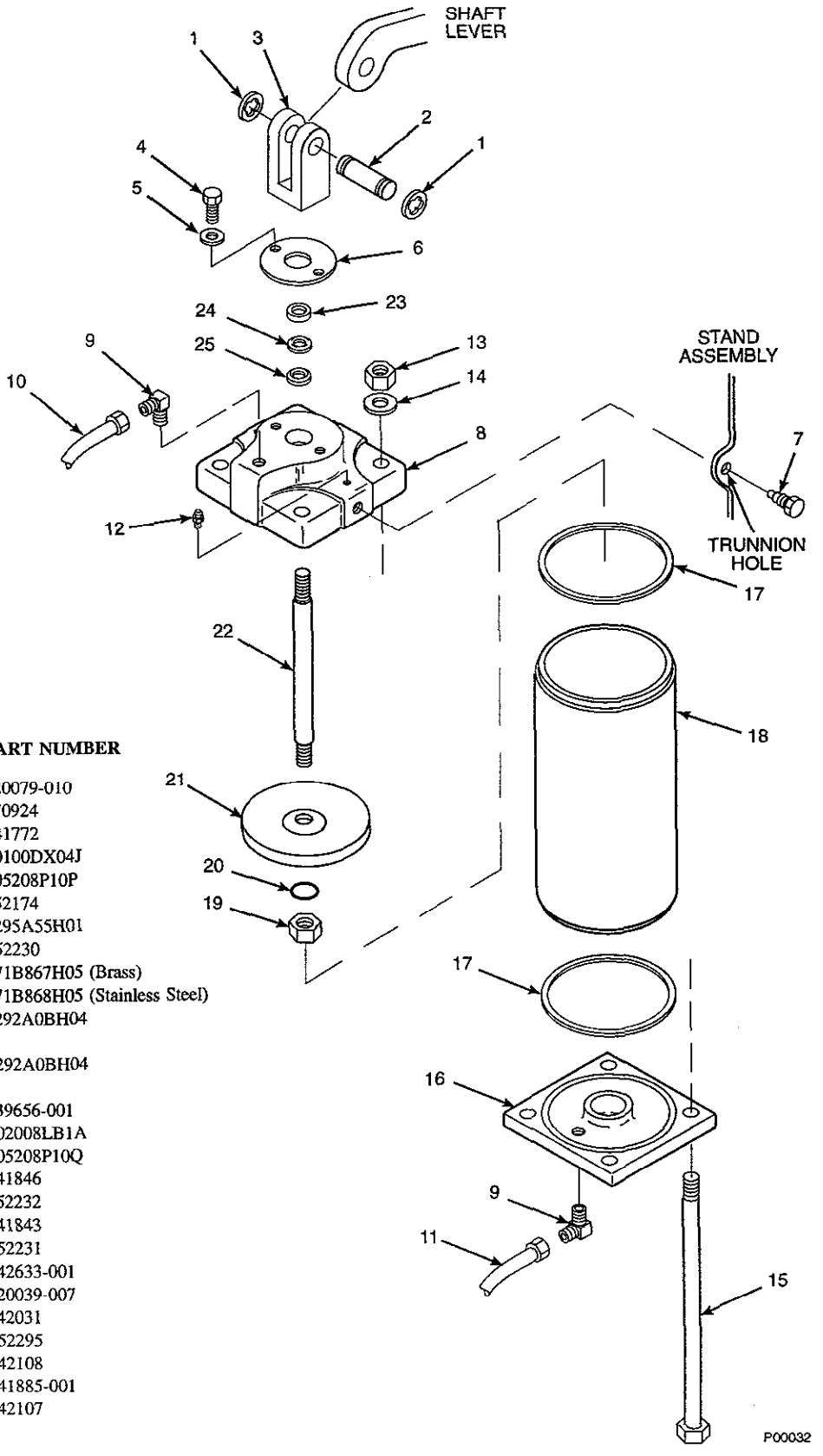

ITEM	DESCRIPTION	PART NUMBER
1	Retaining Ring	120079-010
2	Clevis Pin	170924
3	Clevis Head	141772
4	Hex Head Cap Screw	70100DX04J
5	Washer	705208P10P
6	Packing Cover	152174
7	Trunnion Screw	6295A55H01
8	Upper Cylinder Head	252230
9	90° Elbow	771B867H05 (Brass) 771B868H05 (Stainless Steel)
10	Increasing Signal Supply Air Hose	6292A0BH04
11	Decreasing Signal Supply Air Hose	6292A0BH04
12	Grease Fitting	139656-001
13	Hex Nut	702008LB1A
14	Washer	705208P10Q
15	Tie Bolt	141846
16	Lower Cylinder Head	252232
17	Cylinder Head Gasket	141843
18	Cylinder	252231
19	Stop Nut	142633-001
20	O-ring	120039-007
21	Piston	142031
22	Piston Rod	152295
23	Female Adaptor	142108
24	V-Packing	141885-001
25	Male Adaptor	142107

Figure 7-4. Cylinder Exploded View

Note

This procedure and Figure 7-4 are set up for direct acting power positioners. In a reverse acting power positioner, increasing signal supply air hose (10, Figure 7-4) would be at bottom of cylinder and decreasing signal supply air hose (11) would be at top of cylinder.

4. Remove increasing signal supply air hose (10, Figure 7-4) from 90° elbow (9) at upper cylinder head (8). Mark supply air hose "upper".

5. Remove decreasing signal supply air hose (11) from 90° elbow (9) at lower cylinder head (16). Mark supply air hose "lower".

6. Remove retaining rings (1) and drive out clevis pin (2) from clevis head (3).

7. While supporting cylinder (18), remove trunnion screws (7).

8. Remove assembled cylinder from trunnion. Move it to a workbench to continue disassembly.

CAUTION

Do not scratch piston rod. Use caution when removing and handling upper cylinder head, piston, and piston rod. If piston rod is scratched, power positioner will produce lower torque and decreased packing life will result.

9. Remove hex nuts (13), washers (14), and tie bolts (15).

CAUTION

Do not pull piston and shaft assembly out of cylinder head. Damage to packing gland bushings and V-packing may occur.

10. Remove upper cylinder head (8) by sliding piston (21) out of cylinder (18).

11. Remove and discard upper and lower cylinder head gaskets (17).

12. If piston is to be replaced, remove stop nut (19), o-ring (20), and piston (21). Replace with new piston and o-ring, securing with same stop nut.

13. If piston was not replaced, clean old grease off piston (21) and piston rod (22). Wipe with commercial grade dry cleaning solvent and let air dry.

14. Remove hex head cap screws (4) and washers (5) securing packing cover (6) to upper cylinder head (8). Remove packing cover from upper cylinder head.

15. Remove and inspect female adaptor (23). Replace female adaptor, V-packing (24), and male adaptor (25) as a set if any one appears damaged or if air was leaking through packing.

16. Install male adaptor (25), V-packing (24) and female adaptor (23). Pack area around female adaptor with McLube grease or equivalent. Secure packing cover (6) to upper cylinder head (8) with hex head cap screws (4) and washers (5).

17. With a clean shop towel and commercial grade dry cleaning solvent, wipe interior surface of cylinder (18). Allow to air dry before assembly.

18. Pack concave area of piston with McLube MoS_2-793 type grease or equivalent. Lightly coat piston rod (22) with McLube MoS_2-793 grease. Wipe excess grease off with clean shop towel.

19. Install tie bolts (15) through lower cylinder head (16).

20. Install cylinder (18) with a new cylinder head gasket (17) onto lower cylinder head (16).

21. Place new upper cylinder head gasket (17) on top of cylinder. Making sure both gaskets are in place, slide piston (21) into upper cylinder head (8) and onto cylinder (18).

22. Align tie bolts (15) through upper cylinder head (8) holes and secure with hex nuts (13) and washers (14). Tighten hex nuts evenly, using a diagonal tightening sequence.

23. Install cylinder assembly by aligning upper cylinder head's (8) mounting holes with trunnion holes in stand assembly. Secure cylinder in stand with trunnion screws (7).

24. Attach clevis head (3) to shaft lever with clevis pin (2). Secure clevis pin with retaining rings (1).

25. Install supply hose marked "upper" (10) to 90° elbow (9) at upper cylinder head (8). Install supply hose marked "lower" (11) to 90° elbow at lower cylinder head (16).

26. Open supply air valves and check for leaks by using a "snoop" type leak detector.

27. Refer to paragraph 4-2 and calibrate power positioner stroke. Return power positioner to service.

f. Cam. Use the following procedure to replace cam. This procedure is to be used for replacement of cam with same part number replacement cam.

WARNING

Before performing any maintenance or repair action on power positioner, shut off supply air, signal air, and any electrical supply or electronic signals to power positioner. Isolate power positioner from all systems connected to the power positioner. Severe injury or death may result from large torque power positioner is capable of producing or from electrical shock.

1. Remove power positioner from service.

2. Remove lock screw (1, Figure 7-5), washer (2), adjustment screw (3), and washer (4) securing cam (5) to cam hub (6). Remove cam from hub.

3. Install new cam (5) on cam hub (6). Align cam so adjustment screw hole is in center of adjustment slot. Secure cam to cam hub with washers (2 and 4), lock screw (1), and adjustment screw (3). Do not tighten screws.

4. Rotate cam to make sure roller is perfectly aligned with zero point on cam.

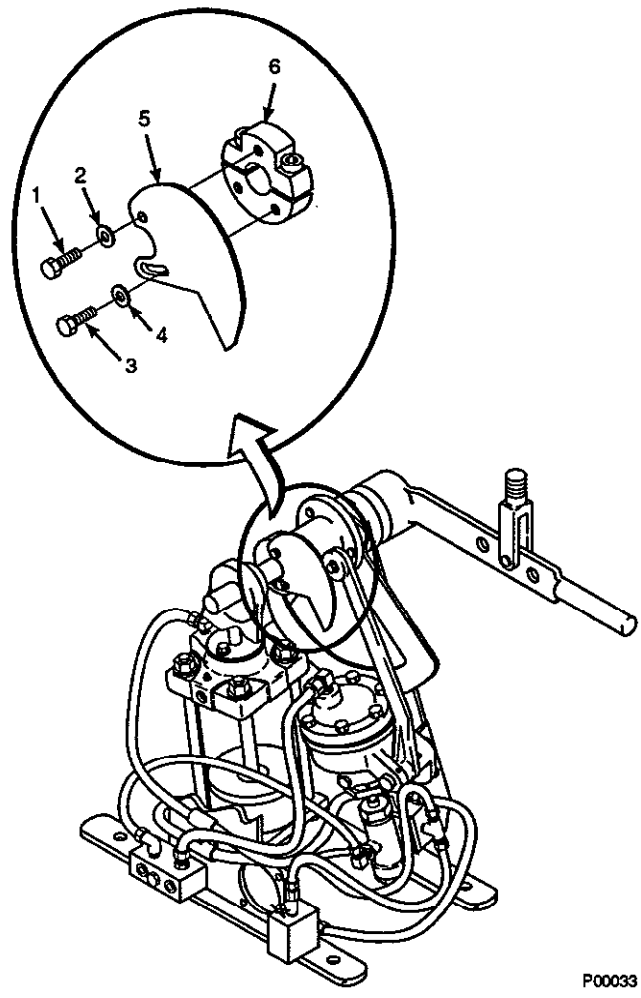

ITEM	DESCRIPTION
1	Lock Screw
2	Washer
3	Adjustment Screw
4	Washer
5	Cam
6	Cam Hub

Figure 7-5. Cam Replacement

5. Tighten lock screw (1) and adjustment screw (3).

6. Refer to Section IV and calibrate power positioner.

7. Return power positioner to service.

SECTION VIII. OPTIONS

8-1. OVERVIEW. The options for the PP405TR power positioner covered in this section include an air lock, electric position transmitter, and heater/thermostat.

8-2. AIR LOCK.

a. **Description.** The air lock, Figure 8-1, automatically locks the power positioner piston and shaft assembly when there is a loss of supply air. When supply air pressure falls below a set value, the air lock diaphragm collapses causing a spring to move the lock lever. This clamps the friction plate and locks the piston and shaft assembly. Upon loss of supply air pressure, the automatic lock can be overridden by turning the air lock release handle fully clockwise. The operator must then open the bypass valve, manually position the output shaft, and lock the output shaft by turning the air lock release handle fully counterclockwise.

b. **Adjustment.**

WARNING

Before performing any maintenance or repair action on power positioner, shut off supply air and signal air, and disconnect any electrical supply or electronic signals to power positioner. Isolate power positioner from all systems connected to power positioner. Severe injury or death may result from large torque power positioner is capable of producing, or from electrical shock.

1. Remove power positioner from service, close supply air shut off valve. Disconnect electrical power to power positioner.

2. Turn the air lock release handle, Figure 8-1, clockwise until the lock lever (1, Figure 8-2) brake shoe is clear of the sector.

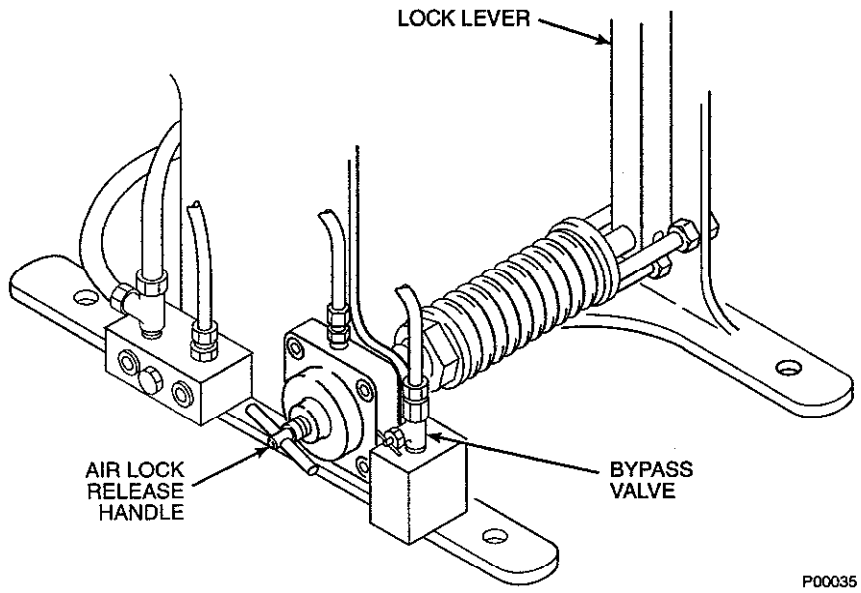

Figure 8-1. Air Lock

ITEM	DESCRIPTION	PART NUMBER
1	Lock Lever	142007
2	Brake Shoe	141889
3	Spacer Block	152179
4	Anvil Screw	152296
5	Hex Head Screw (3/8-16 x 1-1/2)	70100DX07L
6	Lock Washer (3/8 Int Tooth)	705208P10Q
7	Lock Fulcrum	152177
8	Pivot Pin	120175-1

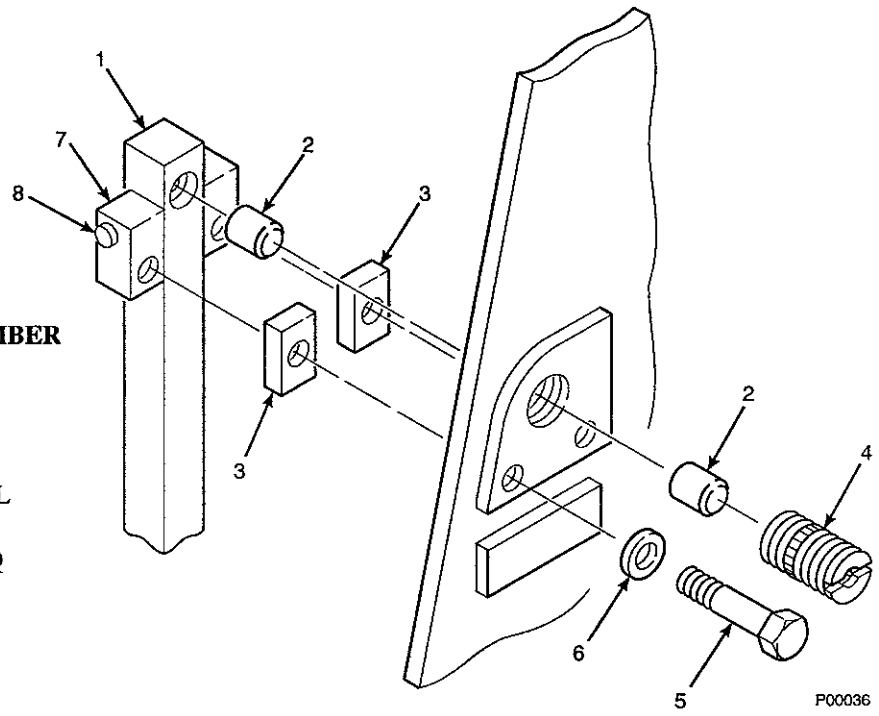

Figure 8-2. Air Lock Brake Exploded View

3. Turn the brake anvil screw (4) in until the anvil brake shoe (2) just clears face of sector.

4. Turn air lock release handle fully counterclockwise.

5. Restore air and electrical power to positioner.

c. <u>Air Lock Brake Shoe Replacement.</u>

WARNING

Before performing any maintenance or repair action on power positioner, shut off supply air and signal air, and disconnect any electrical supply or electronic signals to power positioner. Isolate power positioner from all systems connected to power positioner. Severe injury or death may result from large torque power positioner is capable of producing, or from electrical shock.

1. Remove power positioner from service, close supply air shut off valve, and isolate electrical power from power positioner.

2. Remove hex head screws (5, Figure 8-2) and lock washers (6).

3. Set spacer blocks (3) aside and move assembled lock lever (1) back, clear of sector.

4. Using a punch, tap brake shoes (2) free from lock lever (1).

5. Remove anvil screw (4) and brake shoe (2). Pull brake shoe out of anvil screw.

6. Install new brake shoe in anvil screw and replace anvil screw in air lock frame.

7. Install new brake shoe (2) in lock lever (1).

8. Position lock lever against frame with spacer blocks (3) and secure in place with lock washers (6) and hex head screws (5).

9. Adjust air lock brake in accordance with paragraph 8-2.a. above.

10. Restore air and electrical power to positioner.

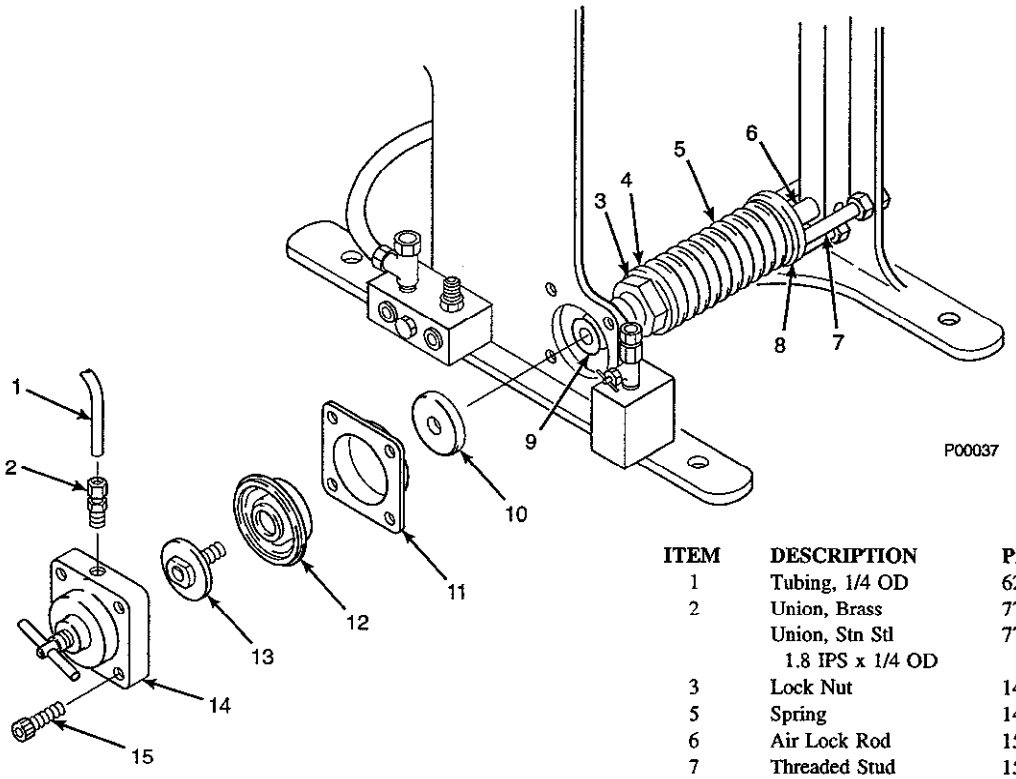

ITEM	DESCRIPTION	PART NUMBER
1	Tubing, 1/4 OD	6292A08H03
2	Union, Brass	771B869H04
	Union, Stn Stl 1.8 IPS x 1/4 OD	771B870H04
3	Lock Nut	142042
5	Spring	142021
6	Air Lock Rod	152166
7	Threaded Stud	152598-1
8	Tripod Top	152220
9	Rod Sleeve	152178
10	Diaphragm Washer	152221
11	Diaphragm Seat	141869
12	Diaphragm	9351-7
13	Diaphragm Stud	142374
14	Air Lock Housing	152236
15	Socket Head Cap Screw (3/8-16 x 3/4)	70041AH095

Figure 8-3. Air Lock Diaphragm Exploded View

c. <u>Diaphragm Replacement.</u>

WARNING

Before performing any maintenance or repair action on power positioner, shut off supply air and signal air, and disconnect any electrical supply or electronic signals to power positioner. Isolate power positioner from all systems connected to power positioner. Severe injury or death may result from large torque power positioner is capable of producing, or from electrical shock.

1. Remove power positioner from service, close supply air shut off valve, and isolate electrical power from power positioner.
2. Turn air lock release handle, Figure 8-1, fully counterclockwise to release any pressure on the diaphragm.
3. Remove socket head cap screws (15, Figure 8-3) and air lock housing (14) from power positioner.
4. Hold rod sleeve (9), being careful not to strip threads, and remove diaphragm stud (13) and diaphragm (12) from power positioner.
5. Make sure that diaphragm washer (10) and diaphragm seat (11) are in place and install new diaphragm (12), securing with diaphragm stud (13).

6. Install air lock housing (14), securing with socket head cap screws (15).

7. Restore air and electrical power to positioner.

8-3. **ELECTRIC POSITION TRANSMITTER (EPT).** For information on the EPT for PP405TR Power Positioner, refer to IB-102-204A, Field Retrofit Kit Electric Position Transmitter.

8-4. **HEATER/THERMOSTAT.** The heater/thermostat helps prevent freezing of moisture or condensate in power positioner supply and signal air lines. This allows the pilot valve to operate better in temperatures below freezing. With the heater/thermostat installed the power positioner can effectively operate in temperatures down to -10°F (-23.3°C). Operation below this ambient temperature is not recommended.

a. Heater Replacement.

WARNING

Before performing any maintenance or repair action on power positioner, shut off supply air, signal air, and any electrical supply or electronic signals to power positioner. Isolate power positioner from all systems connected to power positioner. Severe injury or death may result from large torque power positioner is capable of producing, or from electrical shock.

1. Remove power positioner from service, close supply air shut off valve, and isolate electrical power from power positioner.

2. Remove heater supply (1 and 2, Figure 8-4) from terminals 2 and 5 on terminal block (3).

3. Remove screws (4), washers (5), nuts (6), and heater (7) from bracket (8).

4. Install new heater, securing with screws (4), washers (5), and nuts (6).

5. Connect black heater lead (1) to terminal 2 and white heater lead (2) to terminal 5 on terminal block (3).

b. Thermostat Replacement.

WARNING

Before performing any maintenance or repair action on power positioner, shut off supply air, signal air, and any electrical supply or electronic signals to power positioner. Isolate power positioner from all systems connected to power positioner. Severe injury or death may result from large torque power positioner is capable of producing, or from electrical shock.

1. Remove power positioner from service, close supply air shut off valve, and isolate electrical power from power positioner.

2. Remove thermostat leads (9 and 10, Figure 8-4) from terminals 3 and 4 on terminal block (3).

3. Remove screws (11), washers (12), grounding lead (13), and thermostat (14) from bracket (8).

4. Install new thermostat. Reattach ground lead.

5. Connect thermostat leads (9 and 10) to terminals 3 and 4 on terminal block (3).

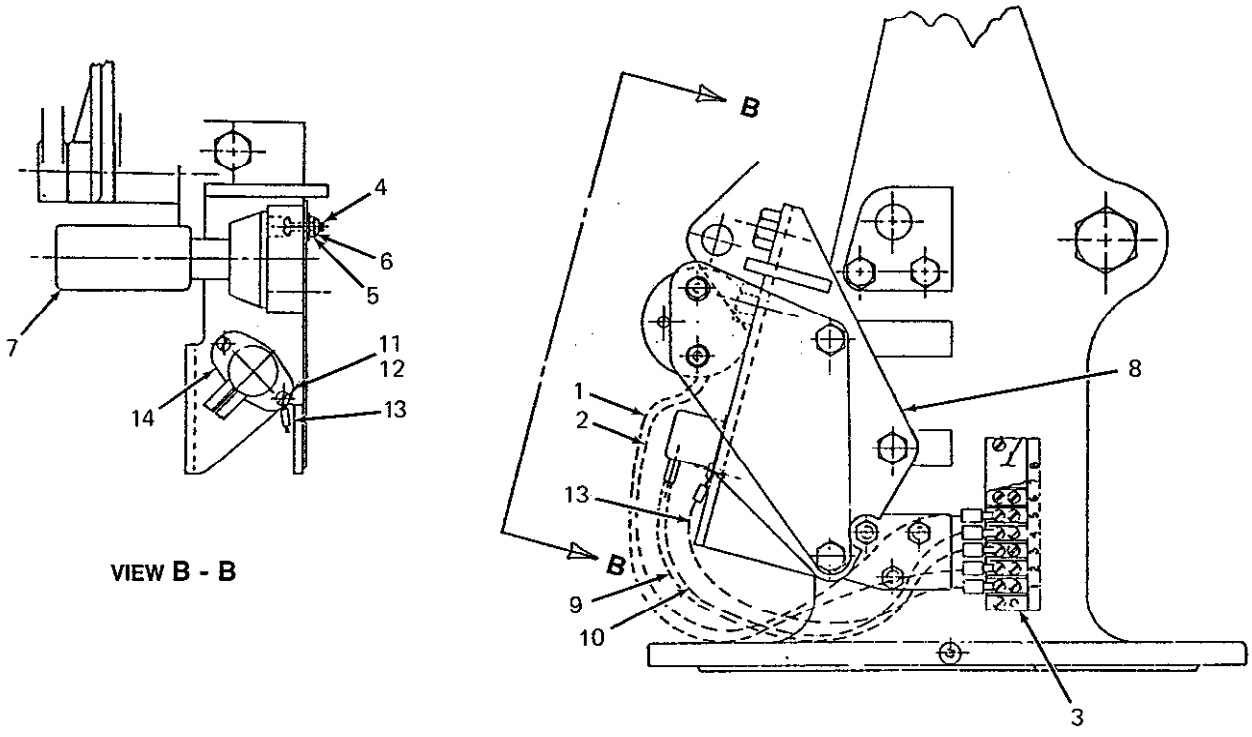

VIEW B - B

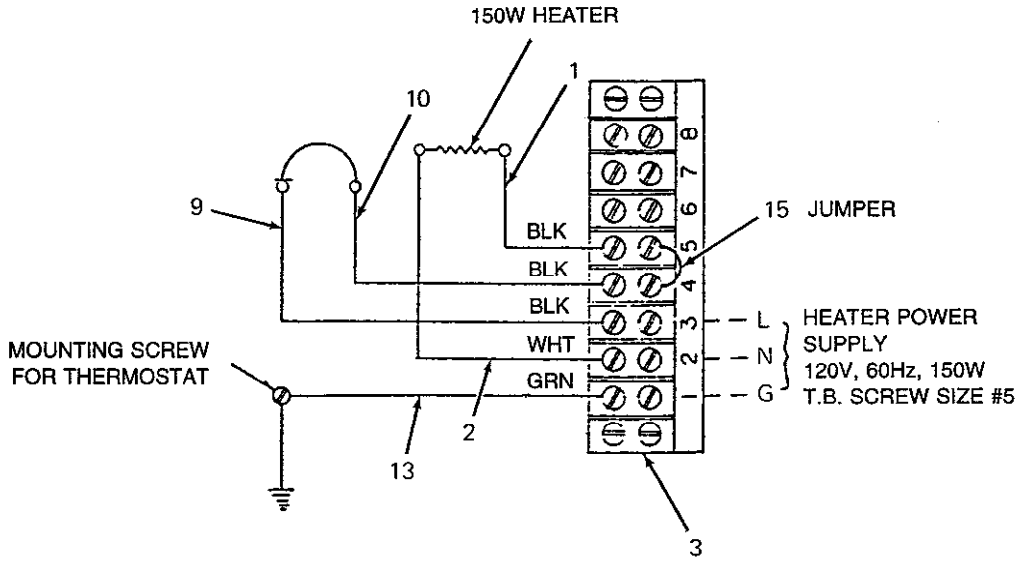

WIRING DIAGRAM FOR HEATER/THERMOSTAT

Figure 8-4. Heather/Thermostat

SECTION IX. RECOMMENDED SPARE PARTS

Table 9-1. Recommended Spare Parts for PP405TR 4 X 5 Power Positioner.

FIGURE and INDEX No.	PART NUMBER	DESCRIPTION	QTY
Not Shown	1A97805G02	Spare Parts Kit 4 x 5 Power Positioner	
		O-ring (120039-007)	1
		O-ring (120039-010)	1
		Cylinder Head Gasket (141843)	2
		V-Packing Rings (141885-001)	3
		Shoe Plug (141889)	2
		Piston (142031)	1
		Gasket (5057-002)	1
		Shoe Plug (141889)	2
		Plastic Tube Air Line (6292A08H04)	2
		Ferrules for Cylinder Tubing (6292A78G03)	4
		Diaphragm (9351-007)	2
	1A9780-5G03	Spare Parts Kit	
		4 inch Piston (142031)	15
	1A9780-5G04	Spare Parts Kit	
		V-Packing Rings (141885-001)	45
	1A9780-5G05	Spare Parts Kit	
		Diaphragm (9531-007)	16
	1A9780-5G06	Spare Parts Kit	
		Cylinder Head Gasket (141843)	56
7-3, 8	9351-007	Diaphragm	1
7-3, 13	7791-021	Connecting Link	1
6-2, 12	5057-002	Pilot Valve Gasket	1
7-2, 7	3531B17G01	Pilot Valve Assembly (2 ports)	1
7-4, 17	141843	Cylinder Head Gasket	2
7-4, 21	142031	Piston	1
7-4, 24	141885-001	V-Packing (3 to a set)	1
7-4, 20	120039-007	O-ring	1
7-4, 10	6292A08H04	Air Supply Tubing	2
Not Shown	6292A78G03	Ferrules for Cylinder Tubing	4
4-2, 9	6292A04H03	Upper Bypass Tubing	1
4-2, 10	6292A04H04	Lower Bypass Tubing	1
7-3, 21	142390	Calibration Spring 0-60 psig	1
7-3, 21	142391	Calibration Spring 0-30 psig	1
7-3, 21	144267	Calibration Spring 3-15 psig	1

Table 9-2. Spare Parts for Options (PP405TR 4 X 5 Power Positioner Only).

FIGURE and INDEX No.	PART NUMBER	DESCRIPTION	QTY
	145822	Heater Receptacle	1
8-4, 7	153407-001	Heating Element (150 Watt)	1
8-4, 14	6292A11G01	Thermostat Assembly	1
	298291-001	Heavy-duty Limit Switch (Counterclockwise)	
	298292-001	Heavy-duty Limit Switch (Clockwise)	
	4511C02G02	Standard Limit Switch Kit	
	5505A52H06	O-ring Gasket	
	6296A25H01	Servo Potentiometer	
	8741-001	Aluminum Micro-switch	
	4844B27H01	Potentiometer, 10 K	
	4516D67G01	Amplifier PC Assembly	
8-3, 5	142041	Air Lock Spring	2
8-3, 9	152178	Rod Sleeve	1
8-3, 13	142374	Diaphragm Stud	2
8-3, 10	152221	Diaphragm Washer	1
8-3, 12	9351-7	Air Lock Diaphragm	10
8-2, 2	141889	Brake Shoe	10
8-2, 4	152296	Anvil Screw	5

NOTE

Table 9-3, Bill of Material for PP405TR 4 x 5 Power Positioner, includes part numbers and descriptions that are keyed to figure and index number references. This listing provides information on all basic PP405TR power positioner parts with the exception of hardware.

Table 9-3. Bill of Material for PP405TR 4 x 5 Power Positioner.

FIGURE and INDEX NO.	PART NUMBER	DESCRIPTION	QTY
	6631D53G01	Frame Assembly	1
3-1, 13	352281	Shaft Assembly	1
3-1, 9	171087	Cam Hub Assembly	1
	6293A33G01	Collar	1
1-2	241892	Operating Arm	1
1-2	242008	Clevis	1
1-2	174356-004	Clevis Pin	1
	142009	Pointer	1
7-4, 8	252230	Upper Cylinder Head	1
7-4, 25	142107	Male Adapter	1
7-4, 24	141885-001	V-Packing	3
7-4, 23	142108	Female Adapter	1
7-4, 6	152174	Packing Cover	1
7-4, 12	139656-001	Grease Fitting	5
7-4, 21	142031	Piston	1
7-4, 22	152295	Piston Rod	1
7-4, 20	120039-007	O-ring	1
7-4, 18	252231	Cylinder	1
7-4, 17	141843	Cylinder Head Gasket	2

Table 9-3. Bill of Material for PP405TR 4 x 5 Power Positioner - Continued

FIGURE and INDEX NO.	PART NUMBER	DESCRIPTION	QTY
7-4, 16	252232	Lower Cylinder Head	1
7-4, 15	141846	Tie Bolt	4
7-4, 3	141772	Clevis Head	1
7-4, 2	170924	Clevis Pin	1
7-4, 7	6295A55H01	Trunnion Screw	2
	441761	Mounting Bracket	1
7-3, 25	241762	Receiver Body	1
7-3, 10	5015-027	Shield	1
7-3, 8	9351-007	Diaphragm	1
7-3, 7	142374	Diaphragm Stud	1
7-3, 13	7791-021	Connecting Link	1
7-3, 9	5014-019	Stop Ring	1
7-3, 6	175464-348	Zero Balance Spring	1
7-3, 5	252228	Diaphragm Cover	1
7-3, 22	5973-007	Spring Washer	1
7-3, 18	5015-007	Trunnion	1
7-3, 17	5015-015	Trunnion Screw	2
7-3, 20	5015-014	Spring Socket	1
7-2, 8	152168	Manifold (Pilot Valve)	1
7-2, 7	3531B17G01	Pilot Valve Assembly	1
3-1, 14	352222	Compensator Lever	1
	152164	Compensator Shaft	1
	142033	Cam Follower	1
3-1, 19	152170	Air Supply Manifold	1
	352224	Top Cover	1
	352237	Side Panel	2
	241879-001	End Panel	1
	142057	Indicator	1
	126172	Nameplate	1
	120079-010	Retaining Ring (Clevis)	1
	126198	Serial Number Plate	1
3-1, 21	6292A04H03	Tubing (Air Supply)	1
3-1, 1 & 2	6292A08H04	Tubing (Piston Supply)	2
3-1, 20	6292A08H12	Tubing (Signal Input)	1
7-3, 21	142390	Calibration Spring 0-60 psig	1
7-3, 21	142391	Calibration Spring 0-30 psig	1
7-3, 21	144267	Calibration Spring 3-15 psig	1
2-10	446823	Blank Cam	1
7-5, 5	242044	Linear Cam, Standard Rotation	1
3-1, 8	243133	Linear Cam, Reverse Rotation	1
	249001	Square Cam, Standard Rotation	1
	249429	Square Cam, Reverse Rotation	1
	249298	Square Root Cam, Standard Rotation	1
4-3	241-96-6080	I/P Converter	1
7-1	372538-002	Air Filter	1
7-1, 5	372538-023	Filter Element	1

SECTION X. RETURNING EQUIPMENT TO THE FACTORY

10-1. If factory repair of defective equipment is required, proceed as follows:

a. Secure a return authorization from a Rosemount Analytical Sales Office or Representative before returning the equipment. Equipment must be returned with complete identification in accordance with Rosemount instructions or it will not be accepted.

In no event will Rosemount be responsible for equipment without proper authorization and identification.

b. Carefully pack defective unit in a sturdy box with sufficient shock absorbing material to insure that no additional damage will occur during shipping.

c. In a cover letter, describe completely:

1. The symptoms from which it was determined that the equipment is faulty.
2. The environment in which the equipment has been operating (housing, weather, vibration, dust, etc.).
3. Site from which equipment was removed.
4. Whether warranty service or nonwarranty service is requested.
5. Complete shipping instructions for return of equipment.

d. Enclose a cover letter and purchase order and ship the defective equipment according to instructions provided in Rosemount Return Authorization, prepaid, to:

American

Rosemount Analytical Inc.
RMR Department
1201 N. Main Street
Orrville, Ohio 44667

European

Rosemount Ireland
Equipment Return Repair Dept.
Site 7 Shannon Industrial Estate
Co. Clare
Ireland

If warranty service is requested, the defective unit will be carefully inspected and tested at the factory. If failure was due to conditions listed in the standard Rosemount warranty, the defective unit will be repaired or replaced at Rosemount's option, and an operating unit will be returned to the customer in accordance with shipping instructions furnished in the cover letter.

For equipment no longer under warranty, the equipment will be repaired at the factory and returned as directed by the purchase order and shipping instructions.

INDEX

This index is an alphabetized listing of parts, terms, and procedures having to do with the Hagan Model PP405TR Torque Type Power Positioner. Every item listed in this index refers to a location in the manual by one or more page numbers.

A

Air Lock, 8-1
Air Piping Schematic, 5-1
Air Piping Schematic, with Bypass Valve and Air Lock, 5-2
Air Supply Requirements, 1-4, 2-4
Automatic Operation, Description, 1-2

B

Bill of Material, 9-3
Bypass Valve, Description, 1-1

C

Calibration Check, 4-1
Calibration, Current to Pneumatic Signal Converter, 4-5
Calibration, Linkage, 4-5
Calibration, Stroke, 4-3
Calibration, Quick Reference, Flowchart, 4-0
Calibration, Reverse Acting Power Positioner, 3-1
Calibration Spring Part Numbers, 9-1
Cam Shaping, Direct Acting Cam, 2-14
Cam Shaping, Inverse Acting Cam, 2-15
Characterized Cam Example, 2-16
Clevis, Description, 1-3
Corrective Maintenance, 7-1
Corrective Maintenance, Air Filter Element, 7-1
Corrective Maintenance, Calibration Spring, 7-3
Corrective Maintenance, Cam, 7-8
Corrective Maintenance, Current to Pneumatic Signal (I/P) Converter, 7-2
Corrective Maintenance, Cylinder, 7-4
Corrective Maintenance, Diaphragm, 7-3
Corrective Maintenance, Pilot Valve, 7-2
Current to Pneumatic Signal Converter, Air Supply, 2-4
Current to Pneumatic Signal Converter, Calibration, 4-5
Current to Pneumatic Signal Converter, Description, 1-2
Current to Pneumatic Signal Converter, Electrical Connections, 2-5
Current to Pneumatic Signal Converter Electrical Connections, Direct Acting, 2-5
Current to Pneumatic Signal Converter, Replacement, 7-3
Current to Pneumatic Signal Converter, Reverse Acting, 2-5
Cylinder Head Gasket Replacement, 7-4
Cylinder Replacement, 7-4

D

Diaphragm Replacement, Air lock, 8-3
Diaphragm Replacement, Receiver, 7-3
Dust Cover, Description, 1-2

E

Environmental Requirements, 1-4
Electric Position Transmitter (EPT), 8-1
Electrical Connections, 2-5

F

Flow Verses Position Formula, 2-1
Formula, Angular Rotation of Driven Lever, 2-7
Formula, Linkage Length, 2-8
Formula, Vertical Arm Travel, 2-6
Foundation, Special Installation Considerations, 2-1
Foundation, Strength Requirements, 2-3

G

General Operation, Description, 1-2
Gasket, Cylinder Head, 7-4
Gasket, Pilot Valve, 6-2, 7-2, 7-3

H

Heater/Thermostat Replacement, 8-4

I

Installation, 2-1
Installation, Air Supply, 2-3
Installation, Linkage, 2-5
Installation, Power Positioner Mounting, 2-1
Installation, Special Considerations, 2-1

L

Linear Cam, Outputs, 1-2
Linkage Design, Special Installation Considerations, 2-1
Linkage, Material, 2-5
Linkage, Maximum Length, 2-5
Lubrication Chart, 6-2

M

Maintenance Schedule, 6-1
Manual Lever, Description, 1-1
Manual Lock, Description, 1-1
Manual Operation, Description, 1-4
Maximum Air Pressure, Cylinder, 1-4
Model Number Matrix, 1-0
Mounting and Installation (Footprint) Drawing, 2-2
Mounting, Foundation Design, 2-3

M

Mounting Instructions, 2-1
Mounting, Location Selection, 2-1
Mounting, Working Clearance Requirements, 2-1

N

NEMA Rating, 1-4

O

Options, 8-1

P

Package Contents, 1-1
Performance Requirements, 1-4
Periodic Maintenance, 6-1
Periodic Maintenance, Air Filters, 6-5
Periodic Maintenance, Cylinder, 6-7
Periodic Maintenance, Diaphragm, 6-4
Periodic Maintenance, General, 6-1
Periodic Maintenance, Pilot Valve, 6-1
Periodic Maintenance, Piston, 6-5
Periodic Maintenance, Storage, 1-5
Physical Characteristics, 1-4
Power Positioner Torque, 2-3
Pressure Regulator, Description, 1-2

R

Recommended Spare Parts, 9-1
Reverse (Inverse) Operation, Description, 1-5, 3-1

S

Signal Requirements, Input, 1-4
Signal Requirements, Output, 1-4
Specifications, 1-4
Square-Root Cam, Outputs, 1-4
Squared Cam, Outputs, 1-2
Supply Air Filter, Description, 1-3
Supply Air, Special Installation Considerations, 2-1
Supply Air Shut Off Valve, 2-4
Switch Ratings, SPST, 1-2
Stem, Cleaning, 6-1
Stem, Illustration, 6-3
Storage Instructions, 1-6

T

Thermostat Replacement, 8-4
Troubleshooting, 5-1
Troubleshooting Chart, 5-3

V

Valve, Pilot, 6-1, 7-2

W

Working Clearances, 2-1
Wiring Codes, 2-1