Quick Start Guide
00825-0100-4843, Rev AF
November 2023

Rosemount™ 3490 Controller



ROSEMOUNT™

EMERSON

Contents

About this guide 3
Installation considerations 5
Components of the controller 7
Mount the controller 10
Prepare the electrical connections 14
Connect wiring and power up 21
Configure controller 27
Web interface 30

1 About this guide

This Quick Start Guide provides basic guidelines for the Rosemount 3490 Controller. Refer to the Rosemount 3490 Reference Manual for more instructions.

1.1 Safety messages

⚠ WARNING

Failure to follow safe installation and servicing guidelines could result in death or serious injury.

Use the controller only as specified in this Quick Start Guide and the Reference Manual.

The controller must be installed, connected, commissioned, operated, and maintained by suitably qualified personnel only, observing national and local requirements that may apply.

The controller must be installed according to the Rosemount 3490 Product Certifications document.

Before commissioning the controller, ensure that the supply voltage matches the voltage specifications on the main label.

Repair, e.g. substitution of components, etc. may jeopardize safety and is under no circumstances allowed.

Electrical shock could cause death or serious injury.

Ensure that the controller is not powered when opening the lid and making terminal connections.

If the controller is installed in a high voltage environment and a fault condition or installation error occurs, high voltage may be present on leads and terminals.

⚠ WARNING

Physical access

Unauthorized personnel may potentially cause significant damage to and/or misconfiguration of end users' equipment. This could be intentional or unintentional and needs to be protected against.

Physical security is an important part of any security program and fundamental in protecting your system. Restrict physical access by unauthorized personnel to protect end users' assets. This is true for all systems used within the facility.

⚠ CAUTION

Pollution protection

Ensure that during installation or maintenance no moisture or dirt can get inside the instrument.

To maintain the housing protection, ensure that the housing lid is closed during operation and locked, if necessary.

2 Installation considerations

General

- The controller is classified type A in accordance with European EMC directive 2014/30/EU. To ensure electro-magnetic compatibility, in any member country, the controller should not be installed in a residential area.
- Supply circuits must be limited to Overvoltage category II, according to IEC 60664-1.
- Ambient temperature range: -40 to +140 °F (-40 to +60 °C)[(1)]

Mounting and installation

- Do not mount the controller on a structure that is subject to vibration, or in a position where damage may be caused by impact, thermal stress or liquid ingress.
- Do not mount the controller in a position where it might come into contact with aggressive substances, e.g. acidic liquids or gases that may attack metals or solvents that may affect polymeric materials.
- The controller housing is rated IP66/IP67 and Type 4X. It is suitable for mounting outside, but this should be above any flood level, away from any overflow path, and away from direct sunlight.
- The mass of the unit is 3.7 lb (1.7 kg). To conform with safety requirements, the wall on which the unit is mounted should be capable of supporting four times this weight.
- Do not mount the controller in a position where it might be exposed to mechanical damage or friction. The controller can withstand an impact of maximum 2 Joule, level of protection: IK07.

Wiring

- Ensure that cable glands and connections to the controller are done in accordance with local and national standards. To maintain the type 4X rating of the enclosure, type 4X connections must be used.
- Cable runs should be separate from any high voltage or mains cables to avoid crosstalk or interference.

(1) Display reading: -4 to +140 °F (-20 to +60 °C).

- A switch or circuit-breaker must be included in the installation, suitable located and easily reached. It must be marked as the disconnecting device for the controller.
- Wires for mains connection should be tied together to prevent from accidental loosening.
- Field wiring shall be rated for 38 °F (21 °C) above maximum ambient temperature.

Maintenance

- To ensure the controller functionality, periodic visual inspection is recommended for:
  - Secure mounting
  - No mechanical damages or corrosion
  - Worn or otherwise damaged cables

3 Components of the controller

Figure 3-1 shows the various parts of the controller.

Figure 3-1: Rosemount 3490 Components

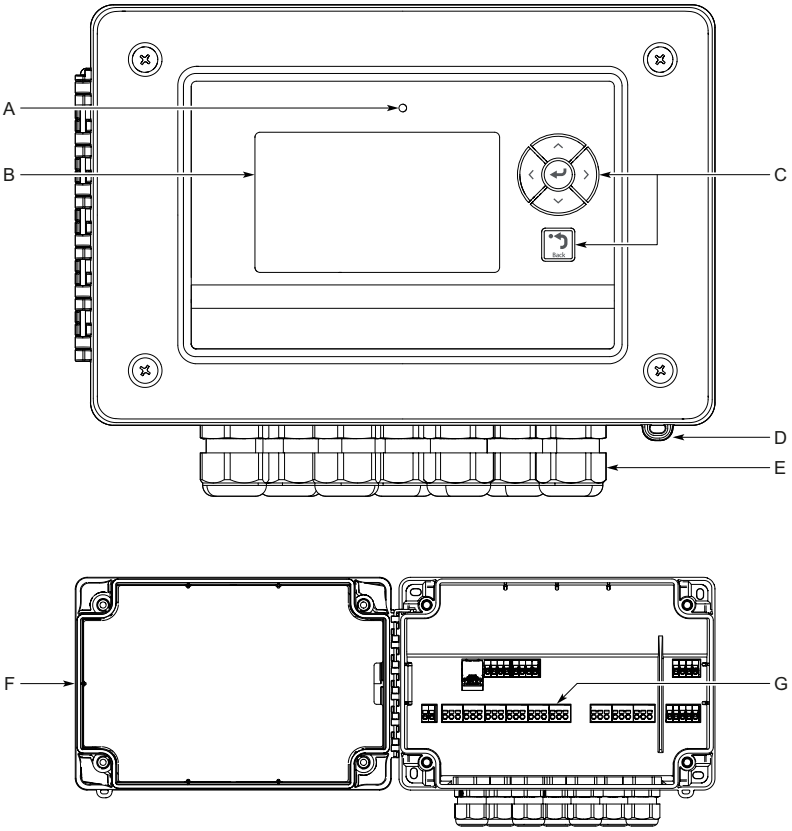

A. Light Emitting Diode (LED) for status and error information
B. Display
C. Keypad
D. Sealing arc
E. Cable entries
F. Lid
G. Terminal board and ports

3.1 Display

The controller display serves as an interface for the user to visualize measured values and status of inputs and outputs. Depending on the selected application, different calculated values will also be presented on the display.

Figure 3-2: Typical Display Presentation

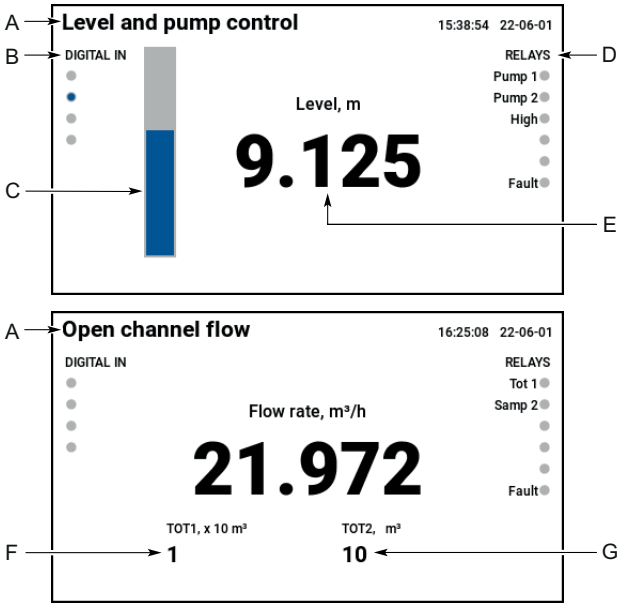

A. Selected application
B. Digital input status
C. Bar graph of calculated value
D. Relay status
E. Calculated value
F. Totalizer 1 value (accumulated)
G. Totalizer 2 value (daily)

3.2 Keypad

The keypad function buttons are used to navigate through the software menu system, to configure and setup the controller.

Table 3-1: Keypad Function Buttons

Button	Action
	The enter button is used to access the menu system, select a menu option, or to confirm settings.
	The up arrow button is used to move upwards when navigating the menu system, or to scroll through a list of options. When editing a parameter value, the up arrow button is used to increase a digit.
	The down arrow button is used to move downwards when navigating the menu system, or to scroll through a list of options. When editing a parameter value, the down arrow button is used to decrease a digit.
	The left arrow button is used to move left when navigating the menu system. When editing a parameter value, the left arrow button is used to move left to another digit.
	The right arrow button is used to move right when navigating the menu system. When editing a parameter value, the right arrow button is used to move right to another digit.
	When navigating the menu system, the back button is used to return to a previous menu level or the main screen. At other times, e.g. while editing, the button is used to restore a setting that is being edited.

4 Mount the controller

4.1 Bracket hole pattern

Figure 4-1: Hole Pattern for Wall Mounting

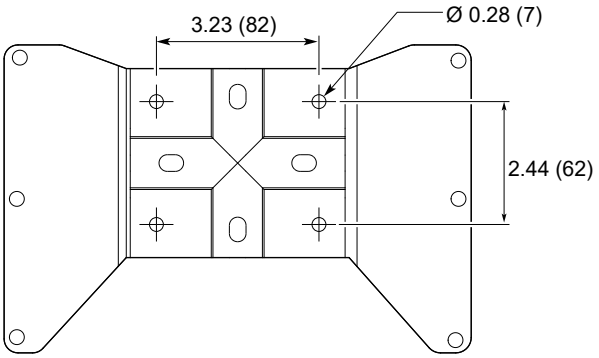

Dimensions are in inches (millimeters).

4.2 Mount the controller on pipe/wall

The mounting instruction includes the wall and pipe mounting kit and the weather protection accessories. Both items are ordered separately, refer to the Rosemount 3490 Product Data Sheet.

Procedure

1. Mount the bracket on the pipe/wall.

   On pipe:

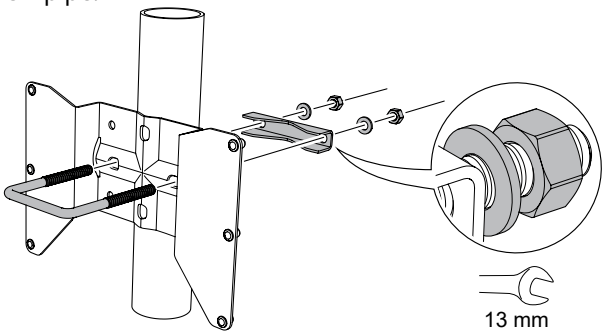

   or

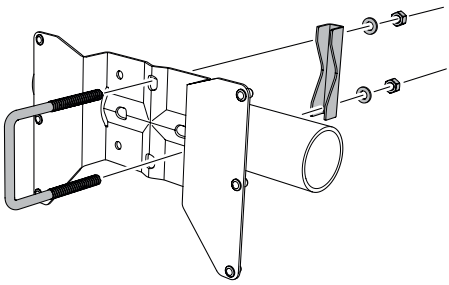

   On wall:

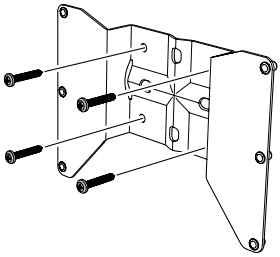

2. Mount the weather protection, using the enclosed screws.

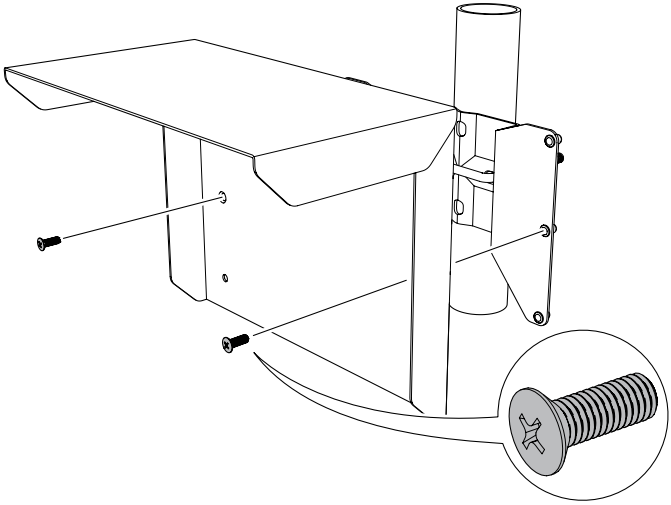

3. Loosen the four screws on the lid.

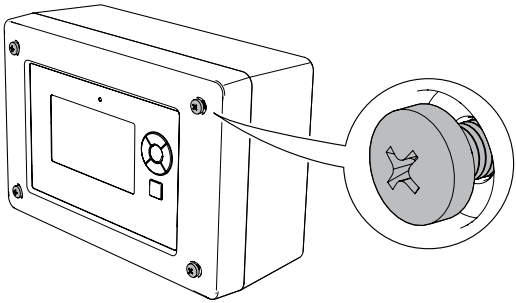

4. Mount the controller.

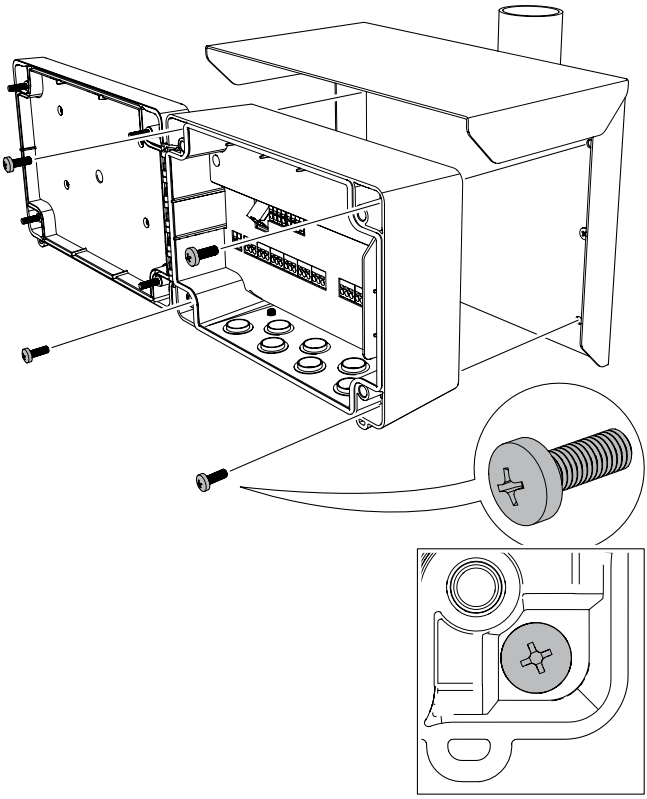

5. Close the lid and tighten the four screws to torque 0.7 lb-ft (1 Nm).

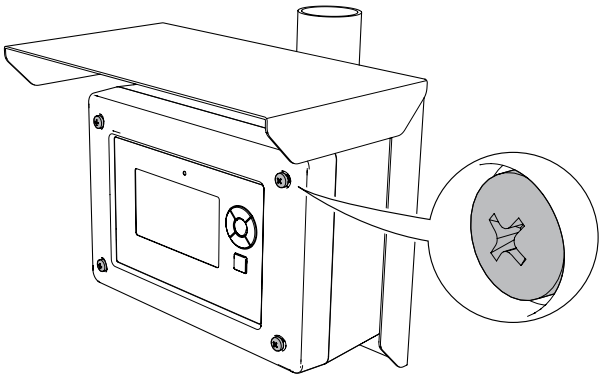

5 Prepare the electrical connections

5.1 Cable selection

The cable diameter must be suitable for the cable gland used to ensure the seal effect of the cable gland (IP protection).

5.2 Cable glands

The controller housing has seven entries for M20 cable glands.

Table 5-1: Tightening Torque for Cable Glands, lb-ft (Nm)

Item	Cable gland	Ethernet cable gland(1)
Cable gland	3.0 (4.0)	3.3 (4.5)
Top nut	2.2 (3.0)	3.3 (4.5)

(1) Only supplied with accessory gland kit.

Table 5-2: Cable Diameter for Glands, in. (mm)

	Cable gland	Ethernet cable gland(1)
Cable Ø	0.16-0.51 (4-13)	0.27 (6.9)

(1) Only supplied with accessory gland kit.

5.3 Conduit hubs

The controller can be installed with conduit hubs. The conduit hub must be installed with a M20 to ½ NPT adapter mounted to the support plate. The adapter is available as accessories.

Table 5-3: Tightening Torque for Adapter supplied by Emerson, lb-ft (Nm)

Item	Torque
Adapter, M20 thread	5.2 (7.0)

5.4 Terminal connection type

Spring loaded terminals

5.5 Conductors

Ensure that you use cables suitable for the terminal blocks.

Table 5-4: Cables Suitable for Rosemount 3490 Terminal Blocks

Conductor connection	Maximum (mm^2)	AWG
Solid	4	12
Flexible	2.5	13
Flexible, Ferrule with plastic collar	1.5	16

Figure 5-1: Conductor Stripping Length and Cross-Sectional Area

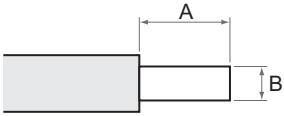

A. Stripping length: 0.4 in. (10 mm)
B. Cross-sectional area, see Table 5-4

5.6 Power supply

The Rosemount 3490 accepts supply voltage 100-240 Vac 50/60 Hz (-15% to +10%)

5.7 Power consumption

Maximum 12 W

5.8 Grounding

Make sure grounding is done according to national and local electrical codes. Failure to do so may impair the protection provided by the equipment. Grounding requirements are dependent on application type:

Shielded cables

- Connect cable shield to terminal 42 (terminal 71 for sensor input 2)
- Connect terminal 41 to instrument earth/ground point

Unshielded cables

Grounding is not necessary for unshielded sensor cables. Leave terminals 41, 42 and 71 unconnected.

5.9 Protective earth

The metal support plate should always be grounded in accordance with national and local electrical codes. Failure to do so may impair the protection provided by the equipment. The most effective grounding method is direct connection to earth ground with minimal impedance. There is a grounding screw connection on the metal support plate.

5.10 Sensor wire cross-section

Appropriate cross-sectional area of wires must be used in order to prevent a too high voltage drop to the connected sensor. Use 0.75 mm^2 to 2.5 mm^2 (18 AWG to 13 AWG) in order to minimize the voltage drop.

5.11 Terminal board and ports

Figure 5-2: Ports and Terminals - Rosemount 3490A

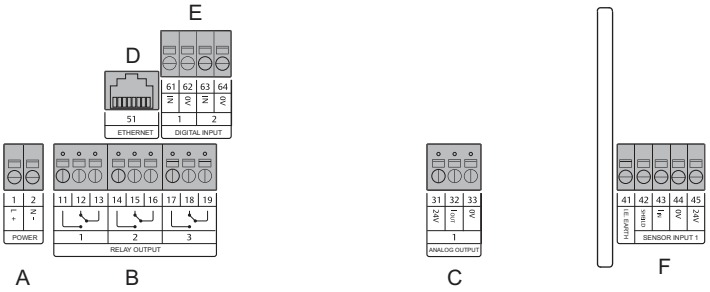

A. Power supply
B. Relay outputs
C. Analog output
D. Ethernet
E. Digital inputs
F. Sensor input 1

Figure 5-3: Ports and Terminals - Rosemount 3490C

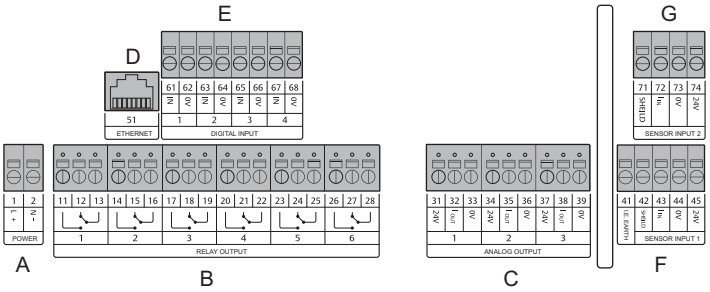

A. Power supply
B. Relay outputs
C. Analog outputs
D. Ethernet
E. Digital inputs
F. Sensor input 1
G. Sensor input 2

5.12 Wiring diagrams

5.12.1 Sensor input connections

Loop-powered sensors are connected as shown in Figure 5-4.

Figure 5-4: Sensor Input - Loop Powered

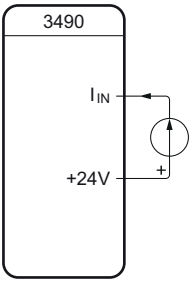

See Figure 5-5 for an example where the Rosemount 1208C is connected to the Rosemount 3490C sensor input 1.

Figure 5-5: Example: 1208C Connected to 3490C Sensor Input 1

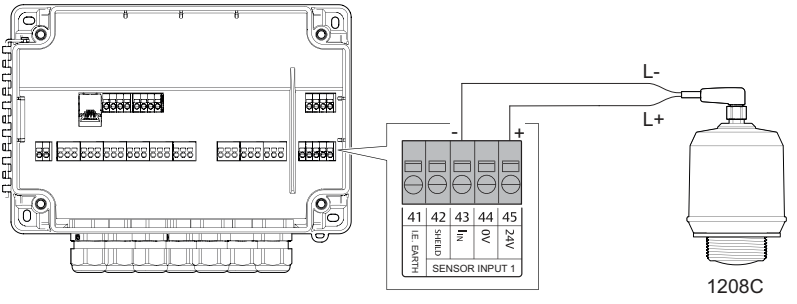

5.12.2 Analog output connections

The analog output may be connected in internally-powered or loop-powered mode. In loop-powered mode, an external power source is required.

Figure 5-6: Analog Output

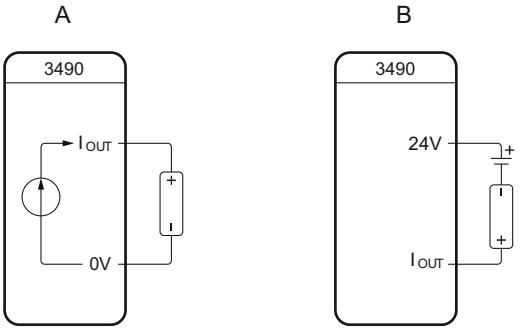

A. Internal power
B. Loop power

5.12.3 Relay output connections

The controller relay outputs are available for normally closed and normally open relay connections.

Limit range: 250 Vac 8 A/24 Vdc 8 A resistive load.

Figure 5-7: Relay Output

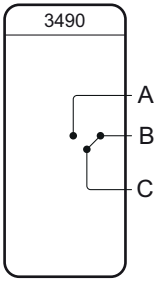

A. Normally open
B. Normally closed
C. Common

5.12.4 Digital input connections

The digital potential-free contact inputs are connected as shown in Figure 5-8. Limit range: Output voltage 14 V, Output current 6 mA.

Figure 5-8: Digital Input

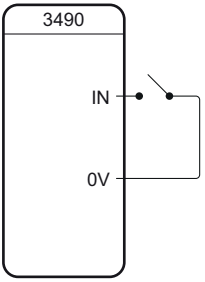

6 Connect wiring and power up

Procedure

1. ⚠ Ensure the power supply is disconnected.
2. Unscrew the four screws on the lid.

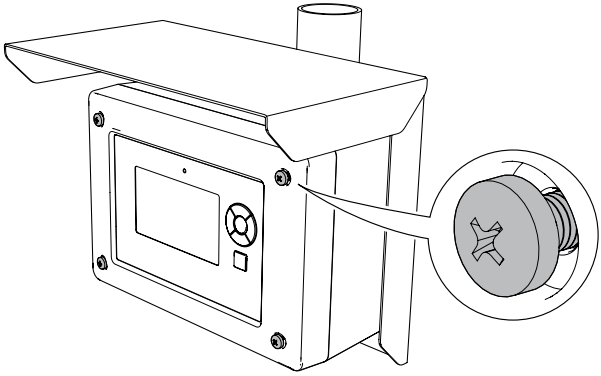

3. Open the lid.

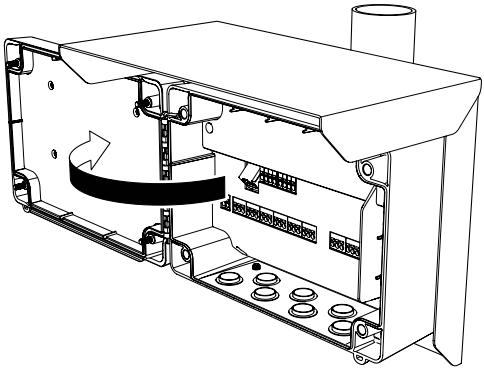

4. Remove the plastic plugs.

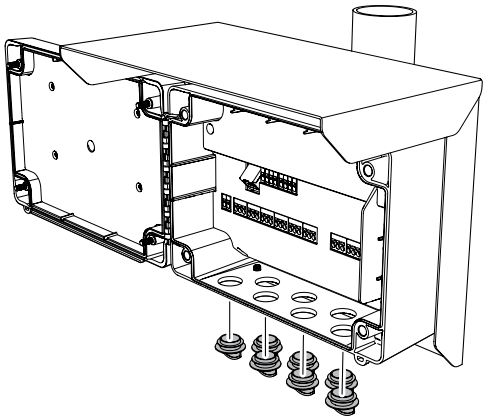

5. Place the support plate into position.

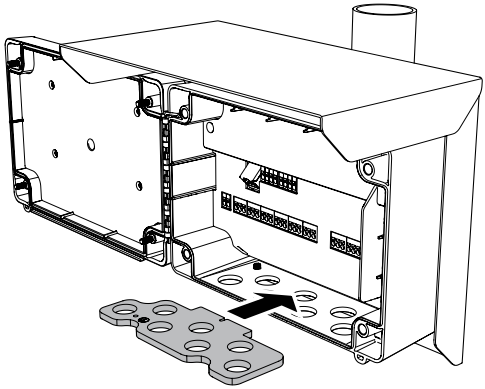

6. Mount the cable glands.

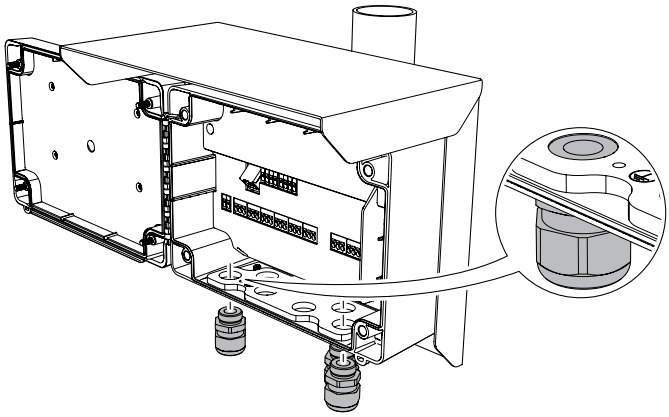

7. Pull the power cable through the cable gland.

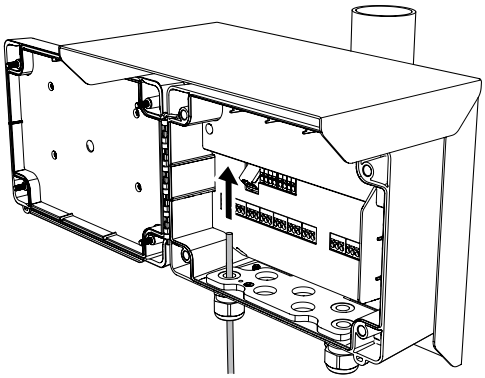

8. Connect the protective earth ground to the support plate with the ring terminal[(2)] and grounding screw (M4) included in the delivery.

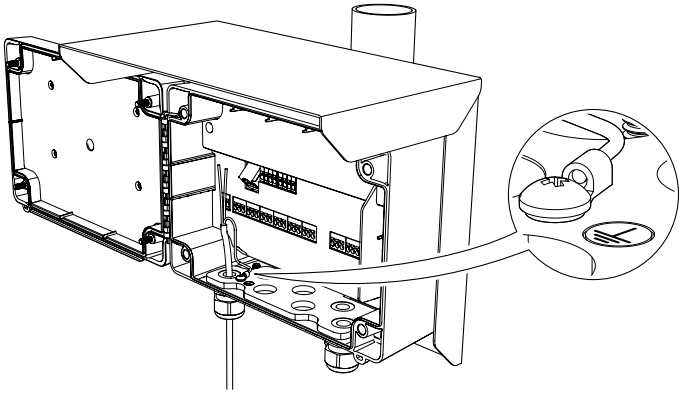

(2) 14 AWG (2.1 mm^2) or smaller wire.

9. Connect the power supply wires to the terminal compartment.

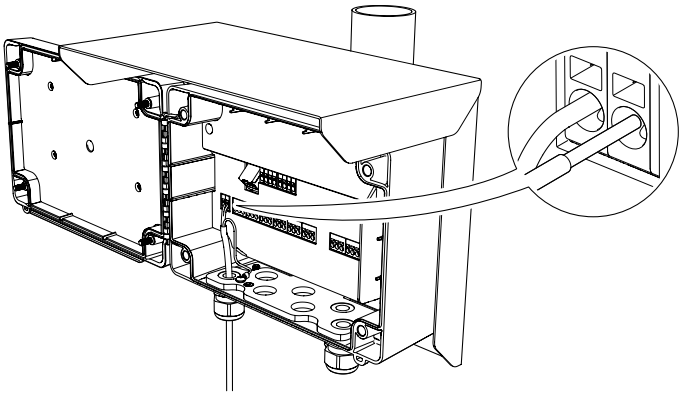

Note
When connecting a flexible (stranded) conductor, use a small flat head screwdriver to press down and hold the terminal connection open.

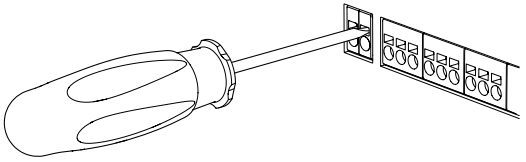

10. Connect the cables to the terminal compartments suitable for your application (see Prepare the electrical connections).
11. Ensure proper grounding (see Grounding).
12. Tighten the cable glands.

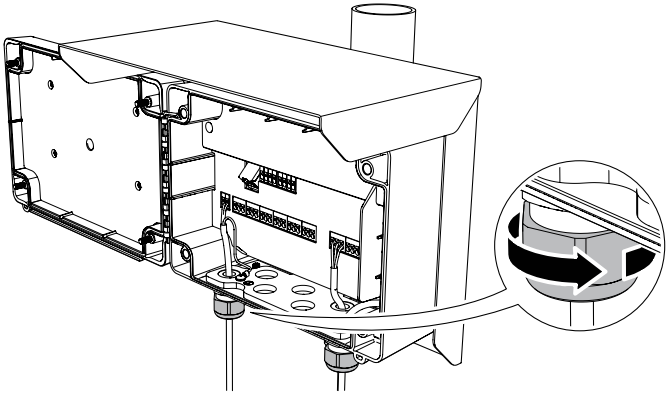

13. Seal any unused port with the enclosed plugs.

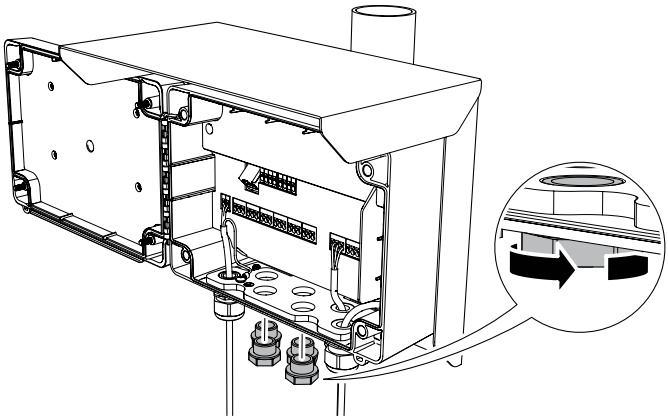

14. Close the lid and tighten the four screws to torque 0.7 lb-ft (1 Nm).

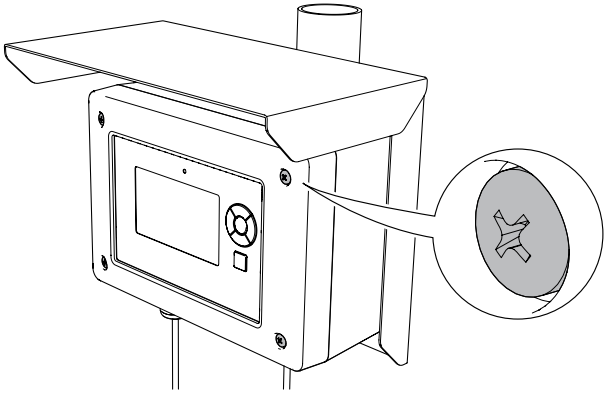

15. Connect the power supply.

    During start-up, approximately 30 seconds, the display prompts the following screen:

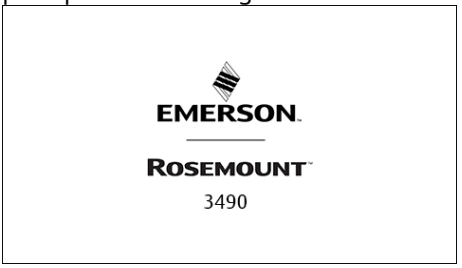

    Once the start-up procedure is finished, the display prompts the following screen:

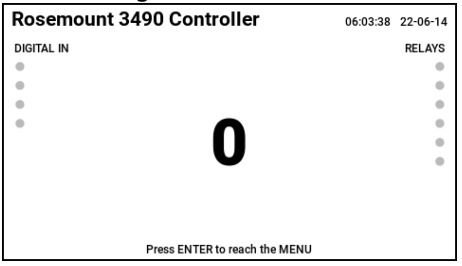

Postrequisites

The controller is now ready to be configured.

7 Configure controller

The Rosemount 3490 can easily be configured using the controllers display and keypad.

7.1 Set up controller

Procedure

1. Press the enter key button to access the main menu.

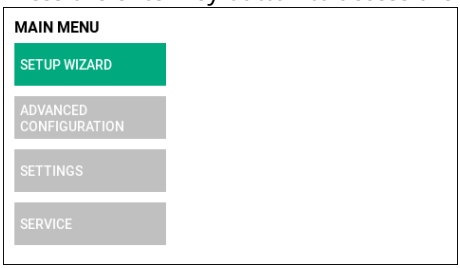

2. From the **Main menu**, select **Settings**.

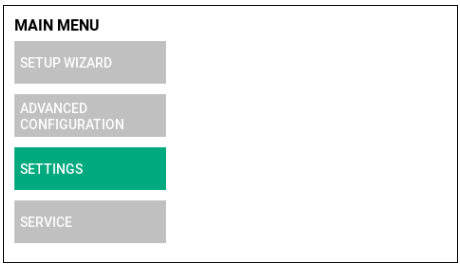

3. From the **Settings menu**, select desired settings option and follow the on-screen instructions.

Option	Description
Date/Time	Select date format and set date/time
Display	Set screen saver timeout and display brightness
IP setting	Set device IP address
Pin security	Set pin codes for device and web interface access
Remote services	Settings for remote services access

7.2 Run application setup wizard

The application setup wizard is the recommended tool to configure the controller. The four setup wizards provide detailed guidance for each application type.

Procedure

1. Press the enter key button to access the main menu.

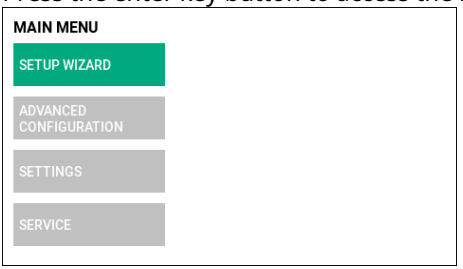

2. From the **Main menu**, select **Setup wizard**.

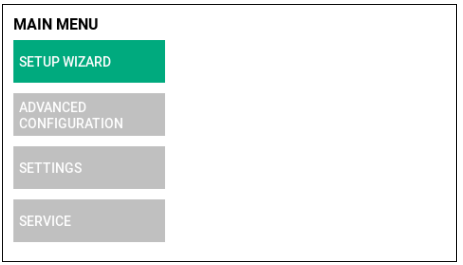

3. From the **Select application** menu, select appropriate application:

Option	Application
Level and pump control	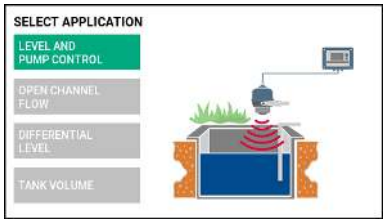
Open channel flow	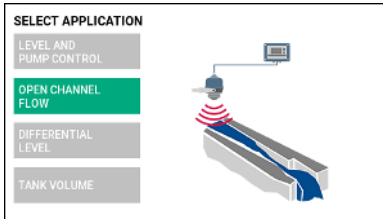
Differential level (3490C only)	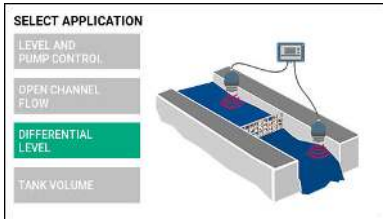
Tank volume	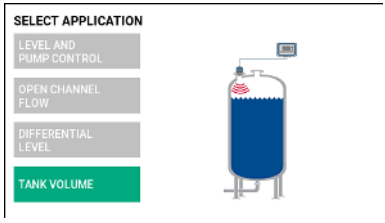

4. Follow the on-screen instructions to configure the controller according to your application.

8 Web interface

The Rosemount 3490 has a web-based graphical user interface that provides the following functions:

- Firmware upgrade
- Managing log files

Figure 8-1: Web Interface Menus



Refer to the Rosemount 3490 Reference Manual for detailed information about the web interface service functions.

8.1 Access the web interface

To access the controller´s web interface:

Procedure

1. Connect a laptop to the controller´s Ethernet port.
2. Set your laptop Ethernet port to a static IP address on the same subnet as the controller.
3. Enter the controller´s IP address into your web browser.
   IP address from factory: 192.168.4.10
4. Enter the requested pin code.
   Pin code from factory: 0000
5. Once you are logged in, the web interface appears with a number of service menus.

Quick Start Guide
00825-0100-4843, Rev. AF
November 2023

For more information: **Emerson.com/global**

©2023 Emerson. All rights reserved.

Emerson Terms and Conditions of Sale are available upon request. The Emerson logo is a trademark and service mark of Emerson Electric Co. Rosemount is a mark of one of the Emerson family of companies. All other marks are the property of their respective owners.

ROSEMOUNT™

EMERSON™