Product Data Sheet
00813-0100-4733, Rev SD
October 2024

Rosemount™ Manifold Solutions



To meet your variety of manifold connection system needs, Rosemount Manifold deliver a diverse product offering that is easy to order, install, and operate. The portfolio includes a wide variety of styles, materials of construction, and valving configurations to address almost any application. Purchasing a Rosemount Manifold with your Rosemount Pressure Transmitter can provide you with highest amount of value. When you bundle these two products, you'll receive a fully assembled, calibrated, and leak-tested solution that is ready for out-of-the-box installation.

Overview



- Factory assembled, leak-tested, and calibrated
- Full breadth offering including integral, in-line, and conventional styles
- Integral design enables flangeless connection to instrument reducing weight, space, and leak points
- Block-and-bleed, two-, three-, and five-valve configurations
- Compact, lightweight design
- Easy in-process calibration
- Direct-mount capability
- Available in NACE®-compliant materials of construction
- Available with Pressure-Lock™ Valve

Contents

Overview....2
Selection guide....3
Valve configuration....5
Rosemount 305 Coplanar Manifolds....9
Rosemount 306 In-line Manifolds....17
Rosemount 304 Conventional Manifolds....24
Specifications....29
Dimensional drawings....41
Options....57

Selection guide

Rosemount 305 Coplanar™ Style



Rosemount R305 three-valve manifold



Rosemount 3051S aseembled to R305 five-valve manifold

Standard features

- Assembled directly to transmitter, eliminating the need for a flange
- Factory leak-tested and calibrated
- Two-, three-, and five-valve configurations
- Available with female NPT process connections
- No exposed bolt configuration enhances reliability
- Fifty percent fewer leak points than conventional transmitter to flange to manifold interface
- Special cleaning options available
- Available with five valve natural gas metering pattern
- Available with IEC flanged, ½-in. NPT bottom and ½-in. NPT side entry process connections

Rosemount R305 exclusive features

- Pressure-Lock Valve with two-piece stem design
- Large internal process bore to resist plugging

Rosemount 306 In-line Style



Rosemount R306 two-valve manifold



Rosemount R306 two-valve manifold

Standard features

- Assembled directly to transmitter or Rosemount Pressure Gauge
- Factory leak tested and calibrated
- Block-and-bleed and two-valve configurations
- Available with female NPT process connections
- Special cleaning options available

Rosemount R306 exclusive features

- Pressure-Lock Valve with two-piece stem design
- Large internal process bore to resist plugging

Rosemount 304 Conventional Style



Rosemount 304 three-valve manifold

Standard features

- Attaches to transmitter flange
- Two-, three-, and five-valve configuration
- Traditional (flange x flange, flange x NPT) and wafer styles
- Available with five-valve natural gas metering pattern
- Factory assembled, seal-tested, and calibrated



Rosemount 304 conventional manifold wafer style

Rosemount Pressure-Lock™ valve technology

Exclusively featured on the Rosemount R305 and R306 Manifolds



Simplified operation

- Two-piece valve stem design provides easier handle turn operation

Increased operator safety

- Needle-tip safety back seating ensures operator safety during process blowout events

Enhanced reliability

- Process-isolated stem threads increase overall valve life

Note

For more information on the Pressure-Lock Valve, reference Rosemount Pressure-Lock Valve configuration.

Valve configuration

Block-and-bleed

The block-and-bleed configuration is available on the Rosemount 306 Manifold for use with in-line gauge and absolute pressure transmitters. A single isolate valve provides instrument isolation and a bleed screw provides drain/vent capabilities.

Figure 1: Rosemount 306 Manifold

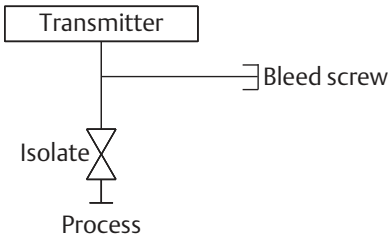

Two-valve

The two-valve configuration is available on Rosemount 305, 306, and 304 Manifolds for use with absolute and gage pressure transmitters. An isolate valve provides instrument isolation and a drain/vent valve allows venting, draining, or calibration.

Figure 2: Rosemount 305 and 306 Manifolds

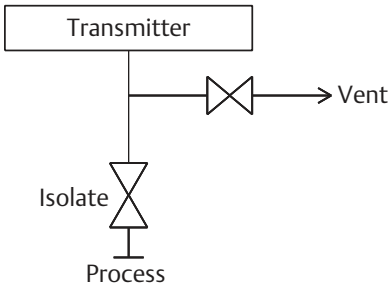

Figure 3: Rosemount 304 Manifold

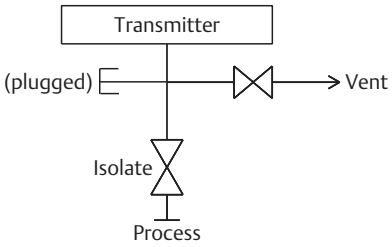

Three-valve

The three-valve configuration is available on Rosemount 305 and 304 Manifolds for use with differential pressure and multi-variable transmitters. Two isolate valves provide instrument isolation and one equalize valve is positioned between the high and low process connections.

Figure 4: Rosemount 305 Manifolds

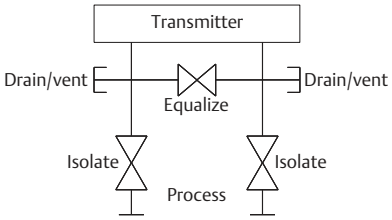

Figure 5: Rosemount 304 (Traditional) Manifold

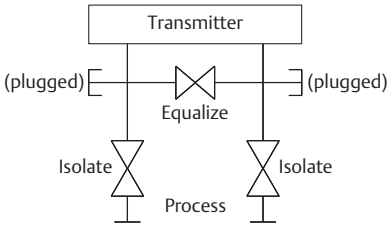

Figure 6: Rosemount 304 (Wafer) Manifold

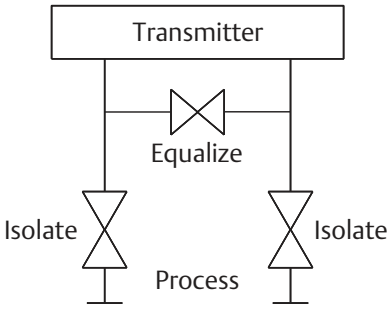

Note

- Unless otherwise noted, vent ports receive plastic caps to protect threaded connections.
- Unless otherwise noted, plugged connections receive ¼-in. NPT plugs.

Five-valve

The five-valve configuration is available on Rosemount 305 and 304 Manifolds for use with differential pressure and multi-variable transmitters. Two isolate valves provide instrument isolation and one equalize valve is positioned between the high and low process connections. Additionally, two drain/vent valves allow for controlled venting, 100 percent capture of vented or drained process, and simplified in-process calibration capability.

Figure 7: Rosemount 305 Manifolds and 304 (Wafer)

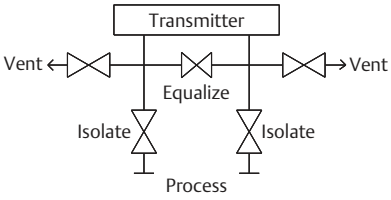

Five-valve natural gas

The five-valve natural gas configuration is available on the Rosemount 305 and 304 Manifolds for use with differential pressure and multi-variable transmitters. Two isolate valves provide instrument isolation and a single drain/vent valve allows for controlled venting, 100 percent capture of vented or drained process, and simplified in-process calibration capability. Additionally, two equalize valves provide extra protection from leaking to ensure DP signal integrity.

NG option includes wide handle pattern and soft seats for ease of use as well as a larger bore to reduce plugging.

Figure 8: Rosemount 305 Manifolds and 304 (Traditional)

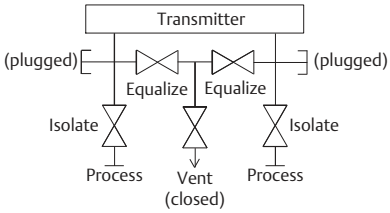

Note

Unless otherwise noted, vent ports receive plastic caps to protect threaded connections.

Unless otherwise noted, plugged connections receive ¼-in. NPT plugs.

Ordering information

Rosemount Manifold can be ordered as a stand-alone product or as an integrated assembly attached to a transmitter.

Order a stand-alone manifold

Procedure

1. Reference the Selection guide for assistance on choosing the type of manifold.
2. Specify a completed model number by referencing the applicable ordering table for the selected manifold type:
   - For the Rosemount 305 Integral Manifold, see Rosemount 305 Coplanar Manifolds.
   - For the Rosemount 306 In-line Manifold, see Rosemount 306 In-line Manifolds.
   - For the Rosemount 304 Conventional Manifold, see Rosemount 304 Conventional Manifolds .

Order a transmitter/manifold assembly

Table 1: Ordering Codes for a Transmitter/Manifold Assembly

Transmitter	Manifold	Process connection code	Manifold option code
Rosemount 3051S	305	A11	N/A
	306	A11	N/A
	304	A12	N/A
Rosemount 3051/2051	305	N/A	S5
	306	N/A	S5
	304	N/A	S6
Rosemount 2088	305	N/A	N/A
	306	N/A	S5
	304	N/A	N/A
Rosemount 4088	305	A11	N/A
	306	A11	N/A
	304	A12	N/A

Procedure

1. Specify a completed Rosemount transmitter model number by referencing the applicable product data sheet.
2. Specify a completed manifold model number by referencing the applicable ordering table for the selected manifold type:
   - For the Rosemount 305 Integral Manifold, see Rosemount 305 Coplanar Manifolds.
   - For the Rosemount 306 In-line Manifold, see Rosemount 306 In-line Manifolds.
   - For the Rosemount 304 Conventional Manifold, see Rosemount 304 Conventional Manifolds .
3. Verify the transmitter model number contains the correct process connection code or manifold option code for the desired transmitter manifold assembly (see Table 1).

Rosemount 305 Coplanar Manifolds



Rosemount Coplanar Manifolds provide a leak-checked and pressure-tested single point solution when assembled to Rosemount Pressure Transmitters. The coplanar platform reduces potential leak paths by 50 percent over conventional style process connections while also reducing overall connection system weight.

Specification and selection of product materials, options, or components must be made by the purchaser of the equipment. See Material selection for more information.

CONFIGURE >

VIEW PRODUCT >

Online product configurator

Many products are configurable online using our product configurator.

Select the **Configure** button or visit Emerson.com/global to start. With this tool's built-in logic and continuous validation, you can configure your products more quickly and accurately.

Specifications and options

Specification and selection of product materials, options, and/or components must be made by the purchaser of the equipment. See the Material selection section for more information.

Model codes

Model codes contain the details related to each product. Exact model codes will vary; an example of a typical model code is shown in Figure 9.

Figure 9: Model Code Example

R305EC32B11 WR5B4

1 2

1. Required model components (choices available on most)
2. Additional options (variety of features and functions that may be added to products)

Optimizing lead time

The starred offerings (★) represent the most common options and should be selected for the fastest delivery times. The non-starred offerings are subject to additional delivery lead time.

Rosemount R305 Integral Manifold

Required model components

Model

Code	Description	
R305	Integral manifold	

Design class

Code	Description	
E	Enhanced	★

Manifold style

Code	Description	
C	Coplanar	★

Manifold type

Code	Description	
2	Two-valve	★
3	Three-valve	★
5	Five-valve	★

Body

Refer to Materials of construction for additional detail on process wetted materials of construction.

Code	Description	Bonnet	Stem and tip	Drain/vent	
2	316 stainless steel (SST)	316 SST	316 SST	316 SST	★

Process connection

Code	Description	
B	½-14 NPT female	★

Packing material

Code	Description	
1[(1)]	PTFE	★
2[(2)]	Graphite-based	

(1) *Includes PTFE tape on drain/vent valves and plugs.*
(2) *Includes graphite tape on drain/vent valves and plugs.*

Valve seat

Code	Description	
1	Integral	★

Additional options

Extended product warranty

Code	Description	
WR3	3-year limited product warranty	
WR5	5-year limited product warranty	

Mounting bracket

Code	Description	
B4	SST mounting bracket for 2-in. (50.8 mm) pipe mount with series 300 SST bolts	
BE	316 SST bracket for 2-in. (50.8 mm) pipe mount with 316 SST bolts	
BF	Carbon steel (CS) panel mount bracket	
BG	316 series SST panel mount bracket	

Bolting materials

Code	Description	
L4	Austenitic 316 SST bolts	
L5	ASTM A193 B7M bolts	
L8	ASTM A193 Grade B8M, Class 2	

Cleaning

This is not available with graphite-based packing material code 2.

Code	Description	
P2	Cleaning for special services	

Material recommendation for NACE

The valve stem and tip material is C-276.

Code	Description	
SG	Sour gas (meets NACE® MR0175/ISO 15156, MR 01031)	
TI	Sour Gas materials of construction with 316 SST non-wetted materials	

NACE certificate

Code	Description	
Q15	Certificate of Compliance to NACE MR0175/ISO 15156 for wetted materials	★

Code	Description	
Q25	Certificate of Compliance to NACE MR0103 for wetted materials	★

Drain vent options

Code	Description	
DM	Drain Vent Plugs, 316 SST	

Rosemount 305 Integral Manifold

Required model components

Model

Code	Description	
0305	Integral manifold	

Manufacturer

Code	Description	
R	Rosemount	★

Manifold style

Code	Description	
C	Coplanar	★
T	Traditional	★
M	Traditional (DIN-compliant flange)	★

Manifold type

Code	Description	
2	Two-valve	★
3	Three-valve	★
5(1)	Five-valve	★
6(2)(3)	Five-valve natural gas metering pattern	★
7(2)(3)	Two-valve (per ASME B31.1/B31.3 [ANSI] power and piping code)	
8(2)(3)	Three-valve (per ASME B31.1/B31.3 [ANSI] power and piping code)	
9(2)(3)	Five-valve (per ASME B31.1/B31.3 [ANSI] power and piping code)	

(1) *Not available with traditional manifold style T.*
(2) *Only available with coplanar manifold style code C.*
(3) *Only available with 316 SST materials of construction code 2.*

Materials of construction

Refer to Materials of construction for additional detail on process wetted materials of construction.

Code	Body	Bonnet	Stem and tip/ball	
2	316 SST/316L SST	316 SST	316 SST	★
3(1)	Alloy C-276	Alloy C-276	Alloy C-276	
4(1)	Alloy 400	Alloy 400	Alloy 400	
8(1)(2)	Alloy 625	Alloy 625	Alloy 625	
9(1)(2)	All super duplex SST (UNS S32760)			

(1) *Materials of construction comply with recommendations per NACE MR0175/ISO 15156 for sour oil field production environments. Environmental limits apply to certain materials. Consult latest standard for details. Selected materials also conform to NACE MR0103/ISO 17495 for sour refining environments.*

(2) *Only available with two-, three-, and five-valve manifold type.*

Process connection style

Code	Description	
A(1)	¼–18 NPT female	★
B(2)	½–14 NPT female	★
S(3)	½–14 NPT female side entry for coplanar style	★

(1) *Only available with traditional manifold style codes T and M.*
(2) *Not available with traditional manifold style code M. Manifold style code T does not include mounting holes on process flange.*
(3) *Only available with coplanar manifold style C, two-, three-, and five-valve manifold type, 316 SST or alloy C-276, alloy 400 materials of construction, integral valve seat code 1, mounting bracket code B4, BE, and sour gas code SG.*

Packing material

Code	Description	
1(1)	PTFE	★
2(2)	Graphite-based	

(1) *Includes PTFE tape on drain/vent valves and plugs.*
(2) *Includes graphite tape on drain/vent valves and plugs.*

Valve seat

Code	Description	
1	Integral	★
5	Soft POM (1)	★

(1) *Only available with natural gas metering pattern.*

Additional options

Extended product warranty

Code	Description	
WR3	3-year limited warranty	★
WR5	5-year limited warranty	★

Mounting brackets

Code	Description	
B1	Bracket for 2-in. (50.8 mm) pipe mounting, CS bolts	★
B3(1)	Flat bracket for 2-in. (50.8 mm) pipe mounting, CS bolts	★
B4	SST mounting bracket for 2-in. (50.8 mm) pipe mounting, 300 SST bolts	★
B7	B1 bracket with 316 SST bolts	★
B9(1)	B3 bracket with 316 SST bolts	★
BA	316 SST B1 bracket with 316 SST bolts	★
BC(1)	316 SST B3 bracket with 316 SST bolts	★
BE	316 SST B4 bracket with 316 SST bolts	★

Code	Description	
BF	CS panel mount bracket	★
BG	316 SST panel mount bracket	★

(1) *Not compatible with the Rosemount 3095 Transmitter.*

Bolt materials

Code	Description	
L4[(1)]	Austenitic 316 SST bolts	★
L5	ASTM A193, Grade B7M bolts	★
L8	ASTM A193, Grade B8M bolts, Class 2	★

(1) *Not available with ASME B31.1 manifold type codes 7, 8, and 9.*

Cleaning

This is not available with graphite-based packing material code 2.

Code	Description	
P2	Cleaning for special services	★

Material recommendations for NACE

Materials of construction comply with recommendations per NACE® MR0175/ISO 15156 for sour oil field production environments. Environmental limits apply to certain materials. Consult latest standard for details. Selected materials also conform to NACE MR0103/ISO 17495 for sour refining environments. This is only allowed with material of construction code 2.

Code	Description	
SG	Sour gas (meets NACE MR0175/ISO 15156, MR0103)	★
TI	Sour Gas materials of construction with 316 SST non-wetted materials	

Material traceability certification

Code	Description	
Q8	Material traceability certification per EN 10204 3.1	

NACE certificate

Code	Description	
Q15	Certificate of Compliance to NACE MR0175/ISO 15156 for wetted materials	★
Q25	Certificate of Compliance to NACE MR0103 for wetted materials	★

Adapters

This is only allowed with traditional manifold style codes T and M. Not allowed with graphite-based packing code 2.

Code	Description	
DF	½–14 NPT female flange adapter	★
DQ	0.47-in. (12 mm) ferrule tube flange adapter	

Cold temperature

This is only available with two-, three-, and five-valve manifold type, 316 SST or alloy C-276 materials of construction and integral valve seat.

Code	Description	
CW1	-67 °F (-55 °C) cold temperature operation	
BR6	-76 °F (-60 °C) cold temperature operation	

Process flow meter configuration

Code	Description	
PF	Relocated equalize valve for 9295 process flow meter	

Process flange bolting connection

This is only available with traditional manifold style code M.

Code	Description	
HK	0.39-in (10 mm) (M10) process flange bolting connection	★
HL	0.47-in. (12 mm) (M12) process flange bolting connection	★

Drain vent options

Code	Description	
DM	Drain Vent Plugs, 316 SST	
DS	Drain Vent Screen	

Rosemount 306 In-line Manifolds



Rosemount In-Line Manifolds provide a leak checked and pressure tested single point solution when assembled to Rosemount Pressure Transmitters. The in-line, compact design is available with a lightweight block and bleed or two-valve configurations.

Specification and selection of product materials, options, or components must be made by the purchaser of the equipment. See Material selection for more information on material selection.

CONFIGURE >

VIEW PRODUCT >

Online product configurator

Many products are configurable online using our product configurator.

Select the **Configure** button or visit Emerson.com/global to start. With this tool's built-in logic and continuous validation, you can configure your products more quickly and accurately.

Specifications and options

Specification and selection of product materials, options, and/or components must be made by the purchaser of the equipment. See the Material selection section for more information.

Model codes

Model codes contain the details related to each product. Exact model codes will vary; an example of a typical model code is shown in Figure 10.

Figure 10: Model Code Example

R306ET22AA11 WR5Q8

1 2

1. Required model components (choices available on most)
2. Additional options (variety of features and functions that may be added to products)

Optimizing lead time

The starred offerings (★) represent the most common options and should be selected for the fastest delivery times. The non-starred offerings are subject to additional delivery lead time.

Rosemount R306 Integral Manifold

Required model components

Model

Code	Description	
R306	In-line manifold	

Design class

Code	Description	
E	Enhanced	★

Manifold style

Code	Description	
T	Threaded	★

Manifold type

Code	Description	
1	Block-and-Bleed	★
2	Two-valve	★

Body

Code	Description	Bonnet	Stem and tip	Drain/vent	
2	316 SST	316 SST	316 SST	316 SST	★

Process connection

Code	Description	
AA	½ in - 14 male NPT process connection x ½ in -14 male NPT instrument connection for in-line transmitter	★
AW	½ in -14 male ANPT process connection x ½ in -14 female ANPT instrument connection for Rosemount Pressure Gauge	★
BA	½ in - 14 female NPT process connection x ½ in -14 male NPT instrument connection for in-line transmitter	★
BW	½ in -14 female ANPT process connection x ½ in -14 female ANPT instrument connection for Rosemount Pressure Gauge	★
CA	3/4 in - 14 male NPT process connection x ½ in -14 male NPT instrument connection for in-line transmitter	

Packing material

Code	Description	
1[(1)]	PTFE	★
2[(2)]	Graphite-based	

(1) *Includes PTFE tape on drain/vent valves and plugs.*
(2) *Includes graphite tape on drain/vent valves and plugs.*

Valve seat

Code	Description	
1	Integral	★

Additional options

Extended product warranty

Code	Description	
WR3	3-year limited product warranty	
WR5	5-year limited product warranty	

Swivel gauge adapter

Code	Description	
SW	Swivel gauge adapter	★

Cleaning

This is not available with graphite-based packing material code 2.

Code	Description	
P2	Cleaning for special services	

Material recommendation for NACE

The valve stem and tip material is C-276.

Code	Description	
SG	Sour gas (Meets NACE MR0175/ISO 15156, MR0103.)	
TI	Sour Gas materials of construction with 316 SST non-wetted materials	

Material traceability certification

Code	Description	
Q8	Material traceability certification per EN 10204 3.1	

NACE certificate

Code	Description	
Q15	Certificate of Compliance to NACE MR0175/ISO 15156 for wetted materials	★
Q25	Certificate of Compliance to NACE MR0103 for wetted materials	★

Rosemount 306 Pressure Manifold

Required model components

Model

Code	Description	
0306	In-line manifold	

Manufacturer

Code	Description	
R	Rosemount	★

Manifold style

Code	Description	
T	Threaded	★

Manifold type

Code	Description	
1	Block-and-bleed	★
2	Two-valve	★
3(1)	Two-valve (per ASME B31.1/B31.3 power piping code)	

(1) *Only available with 316 SST materials of construction and graphite-based packing.*

Material of construction

Refer to Materials of construction for additional detail on process wetted materials of construction.

Code	Body	Bonnet	Stem and tip/ball	
2	316/316L SST	316 SST	316 SST	★
3(1)(2)	Alloy C-276	Alloy C-276	Alloy C-276	
4(1)(2)	Alloy 400	Alloy 400	Alloy 400/K-500	
8(1)(2)	Alloy 625	Alloy 625	Alloy 625	
9(1)(2)	All super duplex SST (UNS S32760)			

(1) *Not available with block-and-bleed manifold type.*
(2) *Materials of Construction comply with recommendations per NACE MR0175/ISO 15156 for sour oil field production environments. Environmental limits apply to certain materials. Consult latest standard for details. Selected materials also conform to NACE MR0103/ISO 17495 for sour refining environments.*

Process connection

Code	Description	
AA	½ in - 14 male NPT process connection x ½ in -14 male NPT instrument connection for in-line transmitter	★

Code	Description	
AW	½ in -14 male ANPT process connection x ½ in -14 female ANPT instrument connection for Rosemount Pressure Gauge	★
BA	½ in - 14 female NPT process connection x ½ in -14 male NPT instrument connection for in-line transmitter	★
BW	½ in -14 female ANPT process connection x ½ in -14 female ANPT instrument connection for Rosemount Pressure Gauge	★

Packing material

Code	Description	
1(1)	PTFE	★
2(2)	Graphite-based	

(1) *Includes PTFE tape on drain/vent valves and plugs.*
(2) *Includes graphite tape on plugs.*

Valve seat

Code	Description	
1	Integral	★

Additional options

Extended product warranty

Code	Description	
WR3	3-year limited warranty	★
WR5	5-year limited warranty	★

Cleaning

This is not available with graphite-based packing material code 2.

Code	Description	
P2	Cleaning for special services	

Cold temperature

This is only available with two-valve manifold type, 316 SST or alloy C-276 materials of construction, ½–14 male and female NPT process connection for in-line transmitters and integral valve seat.

Code	Description	
CW1	-67 °F (-55 °C)	
BR6	-76 °F (-60 °C)	

Material recommendations for NACE

Materials of Construction comply with recommendations per NACE MR0175/ISO 15156 for sour oil field production environments. Environmental limits apply to certain materials. Consult latest standard for details. Selected materials

also conform to NACE MR0103/ISO 17495 for sour refining environments. This is only allowed with material of construction code 2.

Code	Description	
SG	Sour gas (meets NACE MR0175/ISO 15156, MR0103)	★
TI	Sour Gas materials of construction with 316 SST non-wetted materials	

Material traceability certification

Code	Description	
Q8	Material traceability certification per EN 10204 3.1	★

NACE certificate

Code	Description	
Q15	Certificate of Compliance to NACE MR0175/ISO 15156 for wetted materials	★
Q25	Certificate of Compliance to NACE MR0103 for wetted materials	★

Swivel gauge adapter

Code	Description	
SW	Swivel gauge adapter	

Rosemount 304 Conventional Manifolds



Rosemount Conventional Manifolds provide a leak-checked and pressure-tested single-point solution when assembled to Rosemount Pressure Transmitters. The conventional platform delivers a like-for-like replacement for traditional style manifolds with threaded or flanged side process entries.

Specification and selection of product materials, options, or components must be made by the purchaser of the equipment. See Material selection for more information.

CONFIGURE > VIEW PRODUCT >

Online product configurator

Many products are configurable online using our product configurator.

Select the **Configure** button or visit Emerson.com/global to start. With this tool's built-in logic and continuous validation, you can configure your products more quickly and accurately.

Specifications and options

Specification and selection of product materials, options, and/or components must be made by the purchaser of the equipment. See the Material selection section for more information.

Model codes

Model codes contain the details related to each product. Exact model codes will vary; an example of a typical model code is shown in Figure 11.

Figure 11: Model Code Example

0304RT32B11 WR5VS

1 2

1. Required model components (choices available on most)
2. Additional options (variety of features and functions that may be added to products)

Optimizing lead time

The starred offerings (★) represent the most common options and should be selected for the fastest delivery times. The non-starred offerings are subject to additional delivery lead time.

Required model components

Model

Code	Description	
0304	Conventional manifold	

Manufacturer

Code	Description	
R	Rosemount	★

Manifold style

Code	Description	
T	Traditional (1)	★
W(2)	Wafer	

(1) *Flange x flange or flange x NPT.*
(2) *Only allowed with material of construction code 2.*

Manifold type

Code	Description	
2(1)	Two-valve	★
3	Three-valve	★
5(2)	Five-valve	★
6(1)	Five-valve natural gas metering pattern	★
7(1)(3)	Two-valve (per ASME B31.1/B31.3 [ANSI] power and piping code)	
8(1)(3)	Three-valve (per ASME B31.1/B31.3 [ANSI] power and piping code)	

(1) *Not available with wafer manifold style code W.*
(2) *Not available with traditional manifold style code T.*
(3) *Only available with 316 SST materials of construction code 2.*

Body

Refer to Material selection for additional detail on process wetted materials of construction.

Code	Description	Bonnet	Stem	Tip	
2	316/316L SST	316 SST	316 SST	316 SST	★
4(1)	Alloy 400	Alloy 400	Alloy 400	Alloy 400	
5	CS	316 SST	316 SST	316 SST	★

(1) *Only available with wafer manifold style and two-valve manifold type.*

Process connection style

Code	Description	
B	½–14 NPT	★
F(1)	Flanged	★

(1) *Not available with wafer manifold style code W.*

Packing/stem seal material

Code	Description	
1(1)	PTFE	★
2(2)(3)	Graphite-based	
3(4)	FKM elastomer O-ring	

(1) *Includes PTFE tape on drain/vent valves and plugs.*
(2) *Only allowed with material of construction code 2.*
(3) *Includes graphite tape on plugs.*
(4) *Only available with option code NG.*

Bolts

Code	Description	
1	For assembly to Rosemount 2051/3051 traditional flange	★
2	For assembly to Rosemount 2051/3051 DIN-compliant traditional flange	★
3	For assembly to Rosemount 2051/3051 coplanar flange	★

Additional options

Gas-metering configuration

This is only available with manifold type code 6.

Code	Description	
NG	Wide handle pattern, ⅜-in. (9.53 mm) bore, soft POM seat	★

Extended product warranty

Code	Description	
WR3	3-year limited warranty	★
WR5	5-year limited warranty	★

Mounting brackets

Code	Description	
VC(1)	Manifold heavy duty mounting bracket, CS for traditional style	★

Code	Description	
VS[1]	Manifold heavy duty mounting bracket, 316 SST for traditional style	★
B4[2]	Manifold SST mounting bracket for 2-in. (50.8 mm) pipe mount with series 300 SST bolts for wafer style	★

(1) *Not available with wafer manifold style code W.*
(2) *Not available with traditional manifold style code T.*

Adapters and connectors

This is only allowed with both manifold style code T and process connection code F. Not allowed with graphite-based packing code 2.

Code	Description	
DF	½–14 NPT female flange adapter	★
DT	½-in. (12.7 mm) ferrule tube flange adapter	★
DQ	0.47-in (12 mm) ferrule tube flange adapter	★
DV	½–14 NPT male non-stabilized connectors	★
DH	½–14 NPT male stabilized extended connectors	★

Dielectric isolator kits

This is only available with option codes DV and DH.

Code	Description	
G2	Dielectric isolators and bolt sleeves for connectors	★

Bolt material

Code	Description	
L4[1]	Austenitic 316 SST bolts	★
L5	ASTM A193, Grade B7M bolts	★
L8	ASTM A193, Grade B8M bolts, Class 2	★

(1) *Not available with manifold type codes 7, 8.*

Material recommendations for NACE

Materials of construction comply with recommendations per NACE® MR0175/ISO 15156 for sour oil field production environments. Environmental limits apply to certain materials. Consult latest standard for details. Selected materials also conform to NACE MR0103/ISO 17495 for sour refining environments. This is only allowed with material of construction code 2.

Code	Description	
SG	Sour gas (meets NACE MR0175/ISO 15156, MR0103)	★
TI	Sour Gas materials of construction with 316 SST non-wetted materials	

NACE certificate

Code	Description	
Q15	Certificate of Compliance to NACE MR0175/ISO 15156 for wetted materials	★

Code	Description	
Q25	Certificate of Compliance to NACE MR0103 for wetted materials	★

Cleaning

This is not available with graphite-based packing material code 2.

Code	Description	
P2	Cleaning for special services	★

Heater block kits

This is not available with manifold type code 6.

Code	Description	
SB	Steam block kit, ¼-in. NPT connection	★

Specifications

Material selection

Emerson provides a variety of Rosemount product with various product options and configurations including materials of construction that can be expected to perform well in a wide range of applications. The Rosemount product information presented is intended as a guide for the purchaser to make an appropriate selection for the application. It is the purchaser's sole responsibility to make a careful analysis of all process parameters (e.g. all chemical components, temperature, pressure, flow rate, abrasives, contaminants), when specifying product, materials, options, and components for the particular application. Emerson is not in a position to evaluate or guarantee the compatibility of the process fluid or other process parameters with the product, options, configuration, or materials of construction selected.

For more information on material compatibility, refer to the Material Selection and Compatibility Considerations for Rosemount Pressure Transmitters.

Pressure and temperature ratings

Figure 12: Rosemount R305 Integral Manifolds

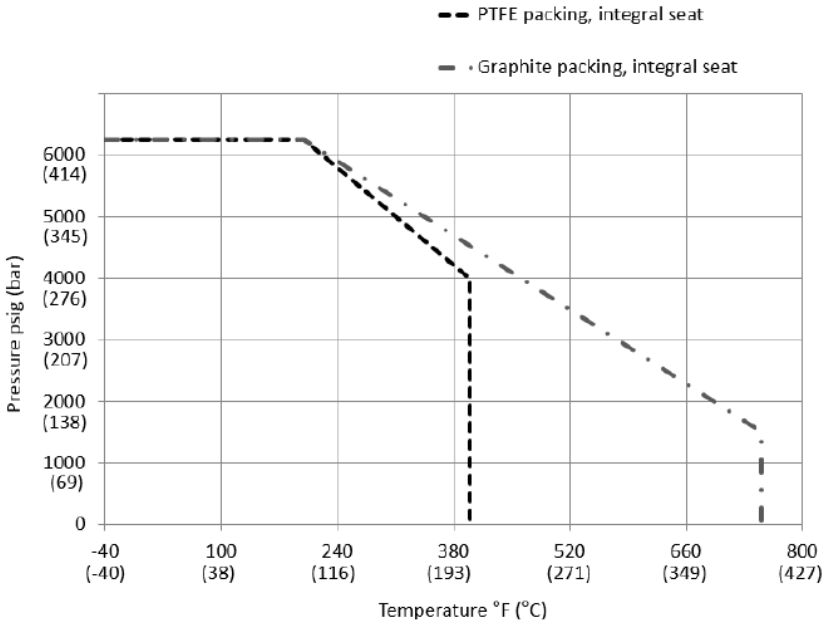

Table 2: Rosemount R305 Integral Manifolds

Packing	Seat	Pressure and temperature ratings
PTFE	Integral	6250 psi at -40 to 200 °F (431 bar at -40 to 93 °C) 4000 psi at 400 °F (276 bar at 204 °C)
Graphite		6250 psi at -40 to 200 °F (431 bar at -40 to 93 °C) 1500 psi at 750 °F (103 bar at 399 °C)

Figure 13: Rosemount 305 Integral Manifolds

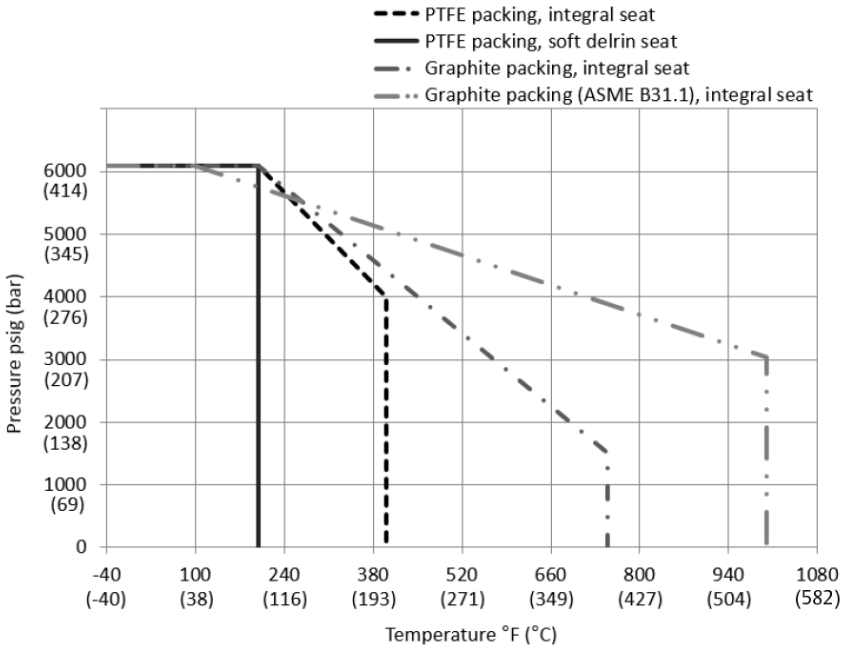

Table 3: Rosemount 0305 Integral Manifolds [1]

Packing	Seat	Pressure and temperature ratings
PTFE	Integral	6092 psi at -40 to 200 °F (420 bar at -40 to 93 °C) 4000 psi at 400 °F (276 bar at 204 °C)
	Soft POM	6092 psi at -40 to 200 °F (420 bar at -40 to 93 °C)
Graphite	Integral	6092 psi at -40 to 200 °F (420 bar at -40 to 93 °C) 1500 psi at 750 °F (103 bar at 399 °C)
Graphite (ASME B31.1/B31.3)		6092 psi at -40 to 100 °F (420 bar at -40 to 38 °C) 3030 psi at 1000 °F (209 bar at 538 °C)
Option CW1 - Temperature rating –67 °F (–55 °C)		
PTFE	Integral	6092 psi at -67 to 200 °F (420 bar at -55 to 93 °C) 4000 psi at 400 °F (276 bar at 204 °C)
Graphite		6092 psi at -67 to 200 °F (420 bar at -55 to 93 °C) 1500 psi at 750 °F (103 bar at 399 °C)
Option BR6 - Temperature rating –76 °F (–60 °C)		
PTFE	Integral	6092 psi at -76 to 200 °F (420 bar at -60 to 93 °C) 4000 psi at 400 °F (276 bar at 204 °C)

(1) *Except option HK: PTFE, integral seat: 2324 psi at 200 °F (160 bar at 93 °C), 1680 psi at 400 °F (116 bar at 204 °C) Graphite, integral seat: 2324 psi at 200 °F (160 bar at 93 °C), 1125 psi at 750 °F (78 bar at 399 °C)*

Note

Ambient and storage temperature ratings follow associated process temperature rating shown in table.

Figure 14: Rosemount R306 In-Line Manifolds

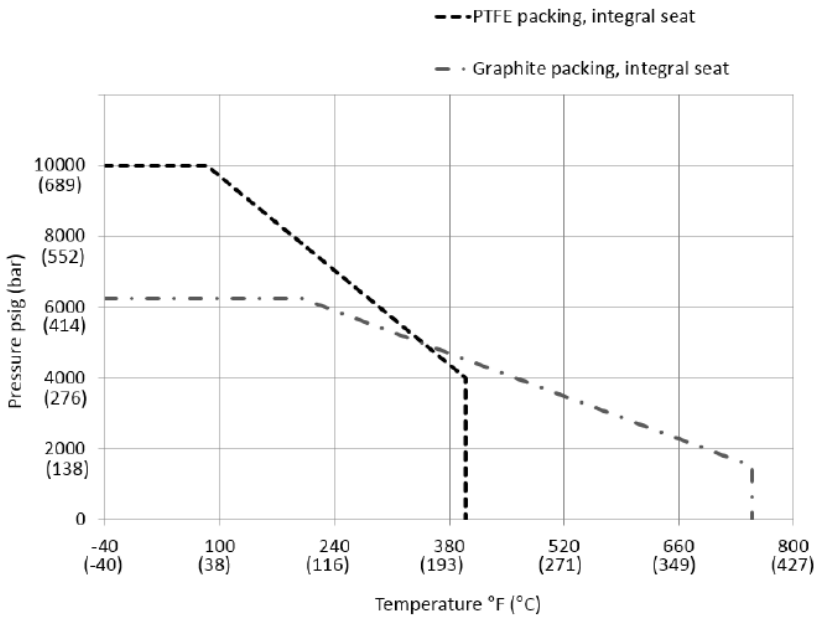

Table 4: Rosemount R306 In-Line Manifolds

Packing	Seat	Pressure and temperature ratings
PTFE	Integral	10,000 psi at -40 to 85 °F (689 bar at -40 to 29 °C) 4000 psi at 400 °F (276 bar at 204 °C)
Graphite		6250 psi at -40 to 200 °F (431 bar at -40 to 93 °C) 1500 psi at 750 °F (103 bar at 399 °C)

Figure 15: Rosemount 306 In-line Manifolds

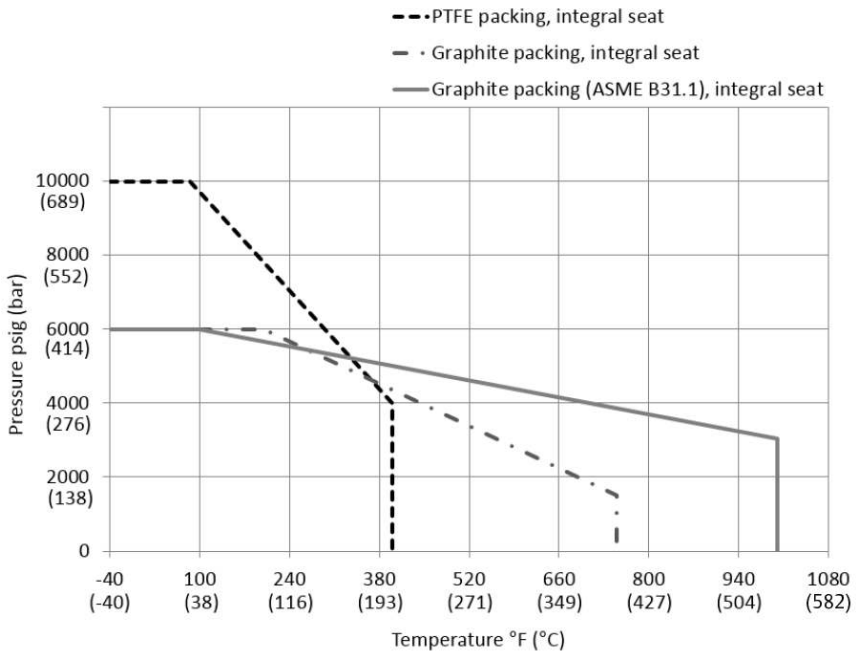

Table 5: Rosemount 306 In-line Manifolds

Packing	Seat	Pressure and temperature ratings
PTFE	Integral	10,000 psi at -40 to 85 °F (689 bar at -40 to 29 °C) 4000 psi at 400 °F (276 bar at 204 °C)
Graphite		6000 psi at -40 to 200 °F (414 bar at -40 to 93 °C) 1500 psi at 750 °F (103 bar at 399 °C)
Graphite (ASME B31.1/B31.3)		6000 psi at -40 to 100 °F (414 bar at -40 to 38 °C) 3030 psi at 1000 °F (209 bar at 538 °C)
Option CW1 - Temperature rating –67 °F (–55 °F)		
PTFE	Integral	10,000 psi at –67 to 85 °F (689 bar at -55 to 29 °C) 4000 psi at 400 °F (276 bar at 204 °C)
Graphite		6000 psi at -67 to 200 °F (414 bar at -55 to 93 °C) 1500 psi at 750 °F (103 bar at 399 °C)
Option BR6 - Temperature rating –76 °F (–60 °F)		
PTFE	Integral	10,000 psi at -76 to 85 °F (689 bar at -60 to 29 °C) 4000 psi at 400 °F (276 bar at 204 °C)

Note
Ambient and storage temperature rating follow associated process temperature ratings shown in table.

Figure 16: Rosemount 304 Conventional Manifolds

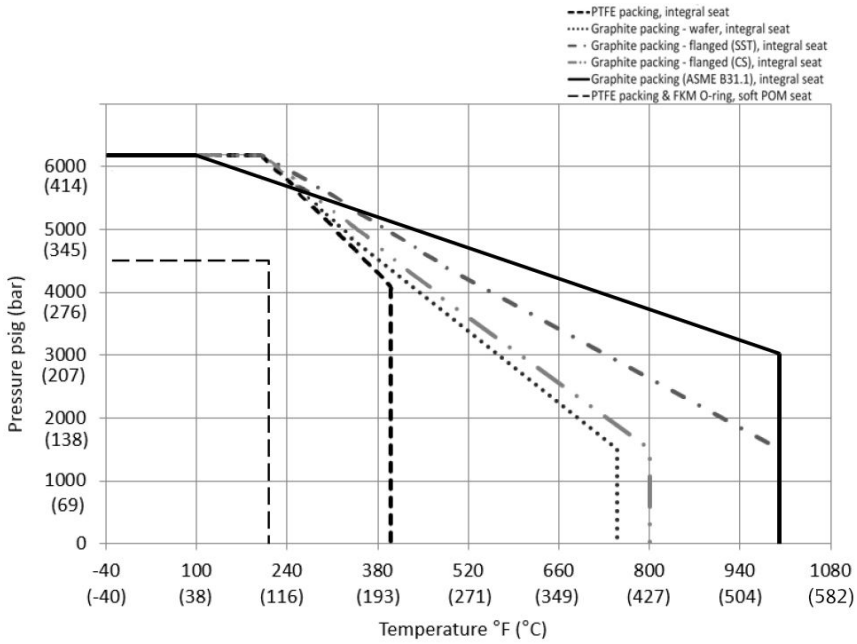

Table 6: Rosemount 304 Conventional Manifolds

Packing	Seat	Pressure and temperature ratings
PTFE (1)	Integral	6092 psi at -40 to 200 °F (420 bar at -40 to 93 °C) 4000 psi at 400 °F (276 bar at 204 °C)
Graphite - wafer		6092 psi at -40 to 200 °F (420 bar at -40 to 93 °C) 1500 psi at 750 °F (103 bar at 399 °C)
Graphite - flanged (SST)		6092 psi at -40 to 200 °F (420 bar at -40 to 93 °C) 1500 psi at 1000 °F (103 bar at 538 °C)
Graphite - flanged (CS)		6092 psi at -40 to 200 °F (420 bar at -40 to 93 °C) 1500 psi at 800 °F (103 bar at 427 °C)
Graphite (ASME B31.1/B31.3)		6092 psi at -40 to 100 °F (420 bar at -40 to 38 °C) 3030 psi at 1000 °F (209 bar at 538 °C)
PTFE	POM	4500 psi at -67 to 212 °F (310 bar at -55 to 100 °C)
FKM O-ring		4500 psi at -13 to 212 °F (310 bar at -25 to 100 °C)

(1) *Maximum working pressure limited to 4500 psi (310 bar) with G2 option.*

Instrument connections

Table 7: Manifold - Transmitter Interface

Model	Connection
Rosemount 305 Integral Manifold	Mounted directly to coplanar sensor module of transmitter, 1.3-in. (287 mm) center-to-center process isolators
Rosemount 306 In-line Manifold	½–14 female NPT for Rosemount Wireless Pressure Gauge
Rosemount 304 Conventional Manifold	Mounted to traditional transmitter flange, 2⅛-in. (53.98 mm) center-to-center connection per IEC 61518, type B shut-off device (1)

(1) *Without spigot.*

O-rings

Figure 17: Rosemount 305 Integral Manifold

Sensor module-to-manifold O-rings
Specified in the transmitter model number.

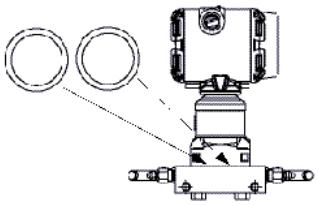

Figure 18: Rosemount 304 Conventional Manifold

Manifold-to-flange O-rings

Same material as specified by manifold packing material selection.(1)

Flange adapter O-rings
Glass-filled PTFE

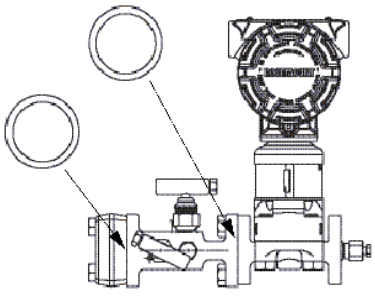

(1) Available in packing material code 1 (PTFE) or code 2 (graphite).

Process connections

Table 8: Rosemount 305 Integral Manifold

Style	Connection
Coplanar	½–14 female NPT
Traditional	¼–18 female NPT (1)

(1) *Process adapters optional.*

Table 9: Rosemount 306 In-line Manifold

Style	Connection
Block-and-bleed	½–14 male NPT(1)
Two-valve	½–14 NPT (2)

(1) *½–14 female NPT option only available with wireless pressure gauge.*
(2) *Male or female.*

Table 10: Rosemount 304 Conventional Manifold

Style	Connection
Flange by pipe	½–14 female NPT
Flange by flange	2⅛-in. (53.98 mm) center-to-center connection (1)
Wafer	½–14 female NPT

(1) *Process adapters required.*

Adapters and connectors

Table 11: Adapter and Connector Option Codes

Option	Description	Image
DF	■ ½–14 NPT female flange adapter ■ Available with Rosemount 305 Integral and 304 Conventional Manifolds	
DT	■ ½-in. (12.7 mm) ferrule tube flange adapter ■ Available with Rosemount 304 Conventional Manifold	
DQ	■ 0.47-in. (12 mm) ferrule tube flange adapter ■ Available with Rosemount 305 Integral and 304 Conventional Manifolds	

Table 11: Adapter and Connector Option Codes *(continued)*

Option	Description	Image
DV[1]	■ Non-stabilized connector ■ 3-in. (76.2 mm) ■ No stabilizing foot ■ Includes assembly hardware	
DH[1]	■ Stabilized extended connectors ■ 4.75-in. (120.65 mm) ■ Stabilizing foot ■ Includes assembly hardware	
G2[1][2]	■ Dielectric isolators ■ Rated to 2500 Vdc and 5 mega- Ohms ■ Includes bolts sleeves and assembly hardware	

(1) *Only allowed with Rosemount 304 Manifold type codes 3 and 6 and process connection code F. Not allowed with graphite-based packing code 2.*
(2) *Maximum working pressure of assembly limited to 4500 psi (310 bar), 3626 psi (250 bar) at –20 °F (–29 °C), and 3626 psi (250 bar) at 150 °F (66 °C).*

Table 12: Spare Part Adapters and Connectors

Spare part number	Description	Image
03031–1320–XXXX[1]	■ Socket weld adapter kit ■ 3-in. (76.2 mm) ■ For traditional flange	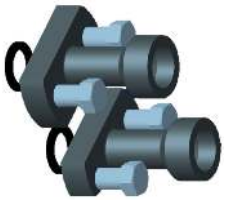

(1) *Complete part numbers for specific socket weld adapter kits can be found on the Spare parts list.*

Vent port connections

½–18 female NPT

Manifold bolts

Standard material is plated CS per ASTM A449, type 1.

Alternative bolt materials offered through option codes:

- L4 for Austenitic 316 SST bolts
- L5 for ASTM A193, Grade B7M bolts

- L8 for ASTM A193, Grade B8M bolts, Class 2

Materials of construction

Process wetted

Table 13: Rosemount R305 Integral Manifold

Component	Option 2	Option 2 with SG
Body	316 SST/316L SST	316 SST/316L SST
Stem	316 SST/316L SST	Alloy C-276
Tip	316 SST	Alloy C-276
Packing	PTFE/graphite	PTFE/graphite
Bonnet	316 SST	316 SST
Pipe plug	316 SST	316 SST
Drain/vent valve	316 SST	Alloy C-276

Table 14: Rosemount 305 Integral Manifold

Component	Option 2	Option 2 with SG	Option 3	Option 4
Body	316 SST/316L SST	316 SST/316L SST	Alloy C-276	Alloy 400
Ball/tip	316 SST/316Ti SST	Alloy C-276	Alloy C-276	Alloy 400
Stem	316 SST	Alloy C-276	Alloy C-276	Alloy 400
Packing	PTFE/graphite	PTFE/graphite	PTFE/graphite	PTFE/ graphite
Bonnet	316 SST	316 SST	Alloy C-276	Alloy 400
Pipe plug	316 SST	316 SST	Alloy C-276	Alloy 400
Drain/vent valve	316 SST	Alloy C-276	Alloy C-276	Alloy 400

Table 15: Rosemount R306 In-line Manifold

Component	Option 2	Option 2 with SG
Body	316 SST/316L SST	316 SST/316L SST
Stem	316 SST/316L SST	Alloy C-276
Tip	316 SST	Alloy C-276
Packing	PTFE/graphite	PTFE/graphite
Bonnet	316 SST	316 SST
Pipe plug	316 SST	316 SST
Drain/vent valve	316 SST	Alloy C-276

Table 16: Rosemount 306 In-line Manifold

Component	Option 2	Option 2 with SG	Option 3
Body	316 SST/316L SST	316 SST/316L SST	Alloy C-276
Tip	316 SST/316Ti SST	Alloy C-276	Alloy C-276
Stem	316 SST	Alloy C-276	Alloy C-276

Table 16: Rosemount 306 In-line Manifold *(continued)*

Component	Option 2	Option 2 with SG	Option 3
Packing	PTFE/graphite	PTFE/graphite	PTFE/graphite
Bonnet	316 SST	316 SST	Alloy C-276
Pipe plug	316 SST	316 SST	Alloy C-276
Bleed screw	316 SST/316Ti SST	Alloy C-276	Alloy C-276

Table 17: Rosemount 304 Conventional Manifold

Component	Option 2	Option 2 with SG	Option 5
Body	316 SST/316L SST	316 SST/316L SST	CS
Tip	316 SST/316Ti SST	Alloy C-276	316 SST
Stem	316 SST	Alloy C-276	316 SST
Packing	PTFE/graphite	PTFE/graphite	PTFE
Bonnet	316 SST	316 SST	CS
Pipe plug	316 SST	316 SST	CS

Typical

Figure 19: Valve Components

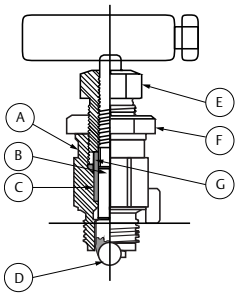

A. Bonnet
B. Stem
C. Packing
D. Tip
E. Packing adjuster
F. Jam nut
G. Packing follower

Estimated weight

Table 18: Rosemount 305 Integral Manifold

Description	Weight
2-valve coplanar	4.5 lb. (2.0 kg)
2-valve traditional	6.0 lb. (2.7 kg)
3-valve coplanar	4.7 lb. (2.1 kg)
3-valve traditional	6.0 lb. (2.7 kg)
5-valve coplanar	6.5 lb. (3.0 kg)

Table 19: Rosemount 306 In-line Manifold

Description	Weight
Block-and-bleed	1.1 lb. (0.5 kg)
Two-valve	2.5 lb. (1.1 kg)

Table 20: Rosemount 304 Conventional Manifold

Description	Weight
Two-valve traditional flange x NPT	5.0 lb. (2.3 kg)
Two-valve traditional flange x flange	5.5 lb. (2.5 kg)
Three-valve traditional flange x NPT	5.2 lb. (2.4 kg)
Three-valve traditional flange x flange	5.7 lb. (2.6 kg)
Three-valve wafer flange x NPT	4.0 lb. (1.8 kg)
Five-valve wafer flange x NPT	5.7 lb. (2.6 kg)
Five-valve traditional flange x NPT	5.7 lb. (2.6 kg)
Five-valve traditional flange x flange	5.7 lb. (2.6 kg)

Rosemount Pressure-Lock Valve configuration

Exclusively featured on the Rosemount R305 and R306 Manifolds, the Pressure-Lock Valve utilizes a two-piece stem design with a non-rotating needle tip, which offers the end user simplified operation, enhanced reliability, and increased operator safety.

Figure 20: Rosemount Pressure-Lock Valve

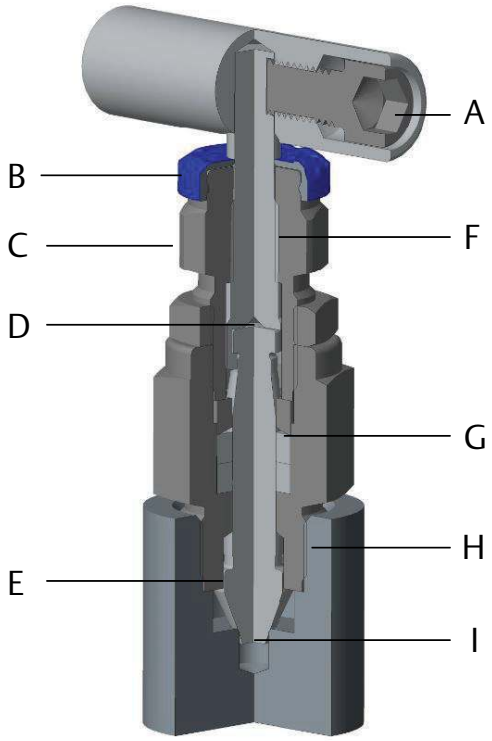

Simplified operation

A. Removable handles - allows for a quick way of adding security and reducing tampering.

B. Color-coded dust caps - reduces valve confusion, labeled to indicate function.

C. Packing nut - allows for smooth adjustment of stem packing.

D. Two-piece stem design with non-rotating tip - provides smooth ergonomic operation, reduces potential leak paths, and decreases overall wear, extending valve life.

Increased operator safety

E. Safety back seating - provides integral blowout protection.

Enhanced reliability

F. Stem threads isolated from process fluid – increase equipment life and operator safety.

G. Modular packing – located below stem threads to isolate thread from process fluid, preventing corrosion.

H. Bonnet threads isolated from process fluid – improves corrosion resistance and equipment life with metal-to-metal, bonnet-to-body seal.

I. One-piece needle tip stem – ensure seal integrity over wide range of pressures and temperatures.

Dimensional drawings

Rosemount coplanar style manifolds

Manifold handle assembly may vary slightly from image shown. All valve handle assemblies provide the same function and meet all stated drawing dimensions. Maximum valve handle width is 2.5 inches (63.5 mm).

Figure 21: Rosemount 305 Two-Valve Coplanar Style Manifold

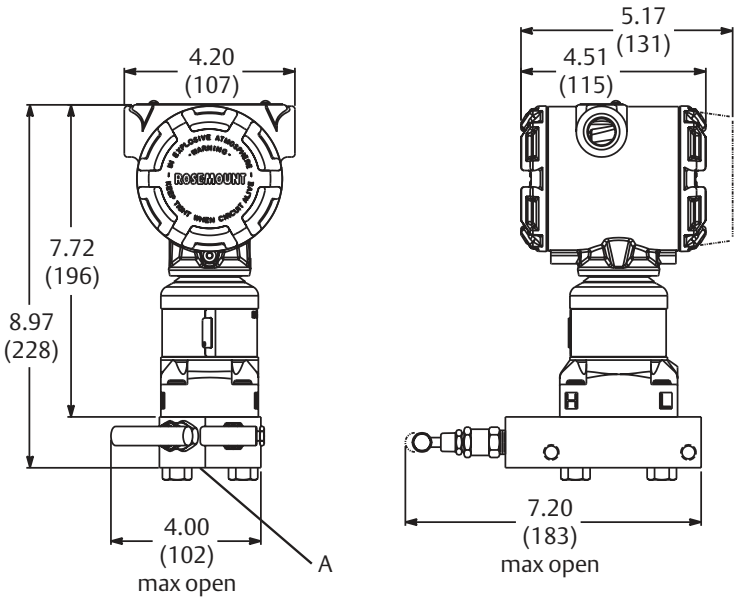

A. ½–14 NPT on manifold for process connection, ¼–18 NPT for test/vent connection

Note
Dimensions are in inches (millimeters).

Figure 22: Rosemount 305 Three-Valve Coplanar Style Manifolds

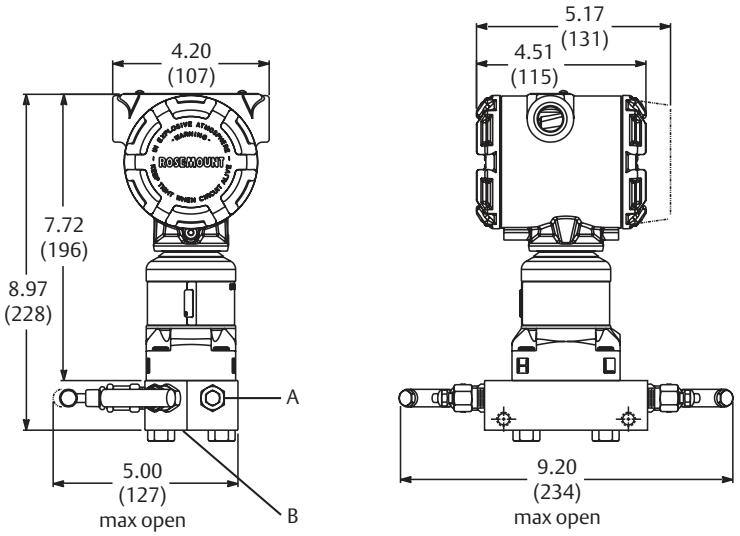

A. Drain/vent valve
B. ½–14 NPT on manifold for process connections, 2⅛-in. (53.98 mm) center-to-center

Note
Dimensions are in inches (millimeters).

Figure 23: Rosemount 305 Five-Valve Coplanar Style Manifold

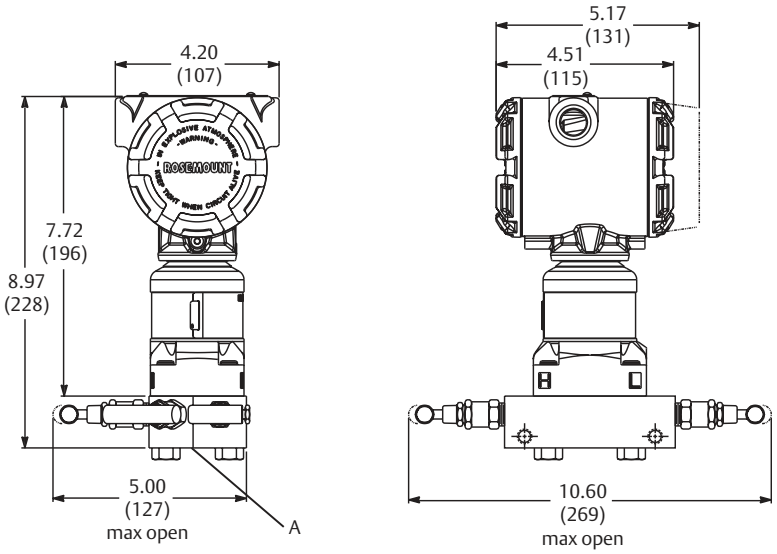

A. ½–14 NPT on manifold for process connections, 2⅛-in. (53.98 mm) center-to-center, ¼–18 NPT for test/vent connection

Note
Dimensions are in inches (millimeters).

Figure 24: Rosemount 305 Two-Valve Coplanar Style Side Entry Manifold

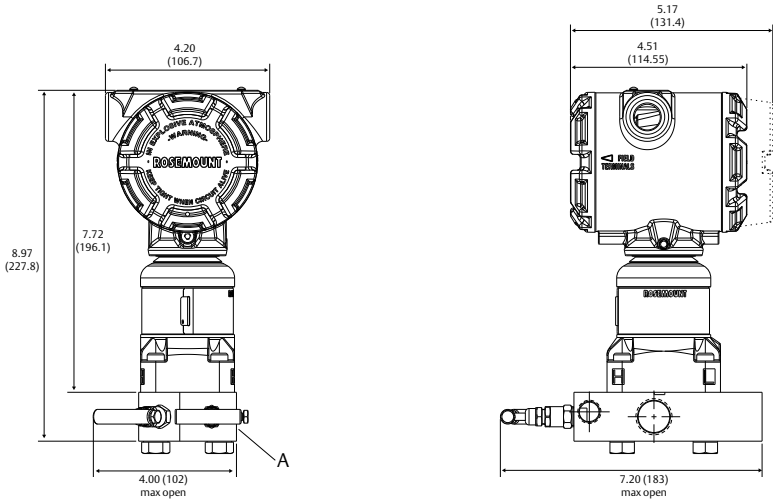

A. ½–14 NPT on manifold for process connections, ¼–18 NPT for test/vent connection

Note
Dimensions are in inches (millimeters).

Figure 25: Rosemount 305 Three-Valve Coplanar Style Side Entry Manifold

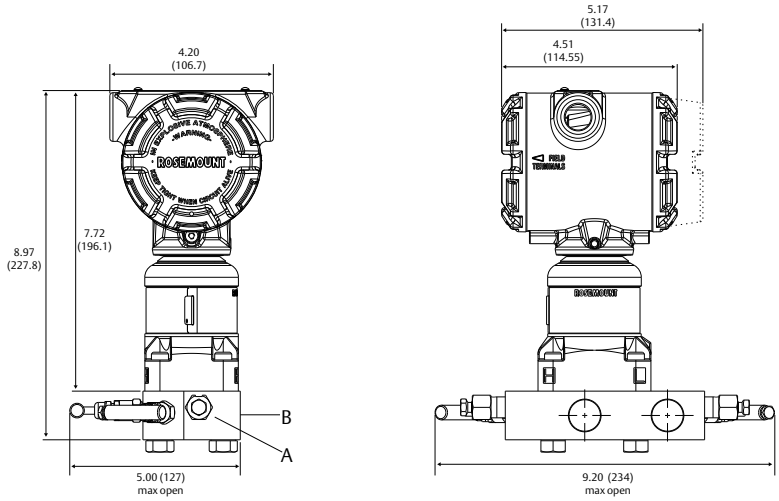

A. Drain/vent valve

B. ½–14 NPT on manifold for process connections, 2⅛-in. (53.98 mm) center-to-center

Note
Dimensions are in inches (millimeters).

Figure 26: Rosemount 305 Five-Valve Coplanar Style Side Entry Manifold

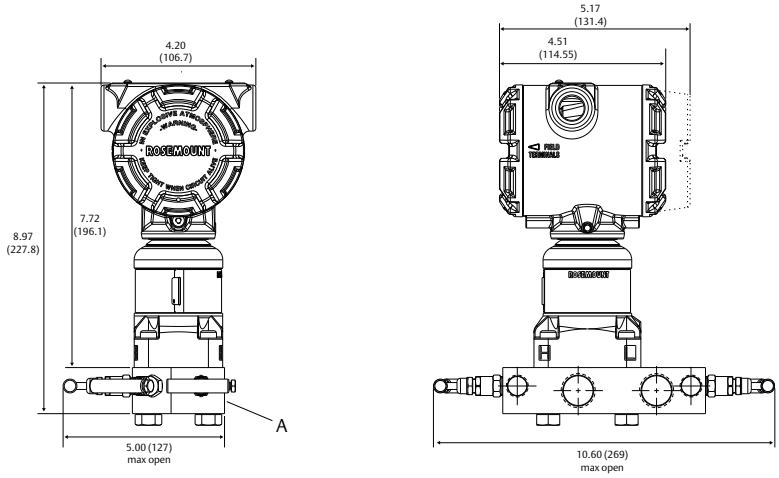

A. ½–14 NPT on manifold for process connections, 2⅛-in. (53.98 mm) center-to-center, ¼–18 NPT for test/vent connection

Note
Dimensions are in inches (millimeters).

Rosemount traditional style manifolds

Manifold handle assembly may vary slightly from image shown. All valve handle assemblies provide the same function and meet all stated drawing dimensions. Maximum valve handle width is 2.5 inches (63.5 mm).

Figure 27: Rosemount 305 Two-Valve Traditional Style Manifold

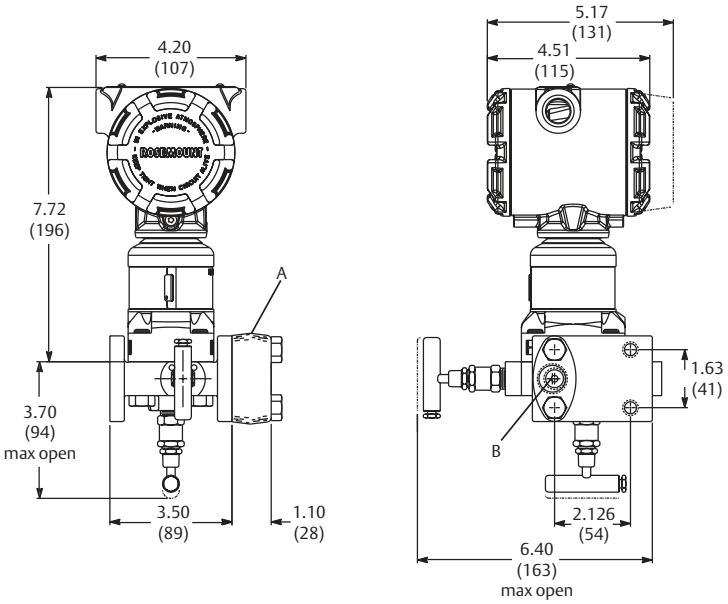

A. ½–14 NPT on optional process adapter

B. ¼–18 NPT on traditional manifold for process connection without the use of a process adapter

Note

Dimensions are in inches (millimeters).

Figure 28: Rosemount 305 Three-Valve Traditional Style Manifold

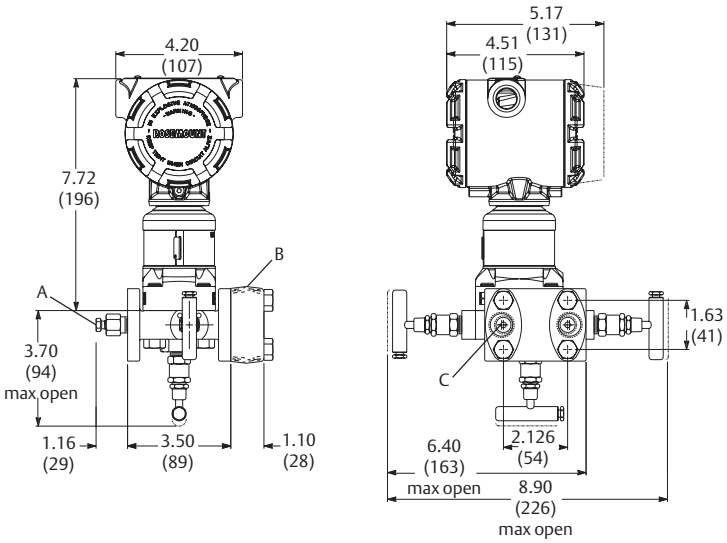

A. Drain/vent valve
B. ½–14 NPT on optional process adapter (2)
C. ¼–18 NPT on traditional manifold for process connections without the use of process adapters

Note
Dimensions are in inches (millimeters).

Figure 29: Rosemount 305 Two-Valve Traditional DIN Style Manifold

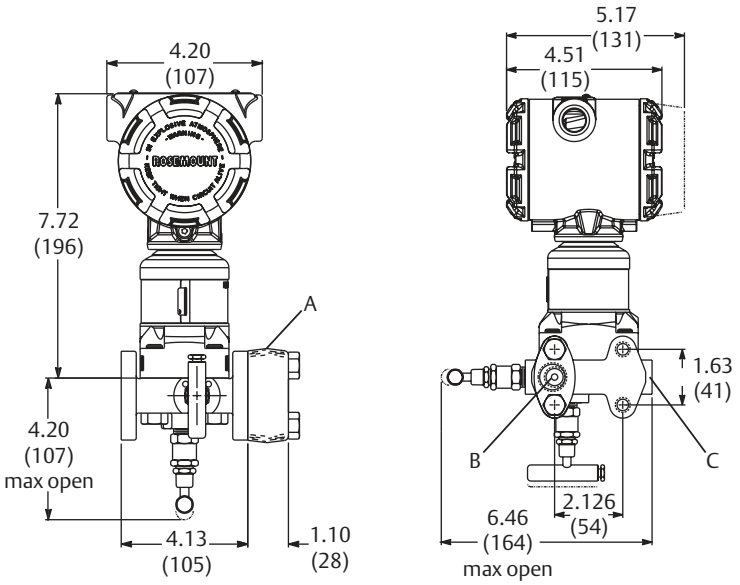

A. ½–14 NPT on optional process adapter
B. ¼–18 NPT on traditional manifold for process connection without the use of a process adapter
C. ¼–18 NPT vent connection

Note
Dimensions are in inches (millimeters).

(2) Adapters can be rotated to give adapter connection centers of 2.0 (51), 2.125 (54), or 2.25 (57).

Figure 30: Rosemount 305 Three-Valve Traditional DIN Style Manifold

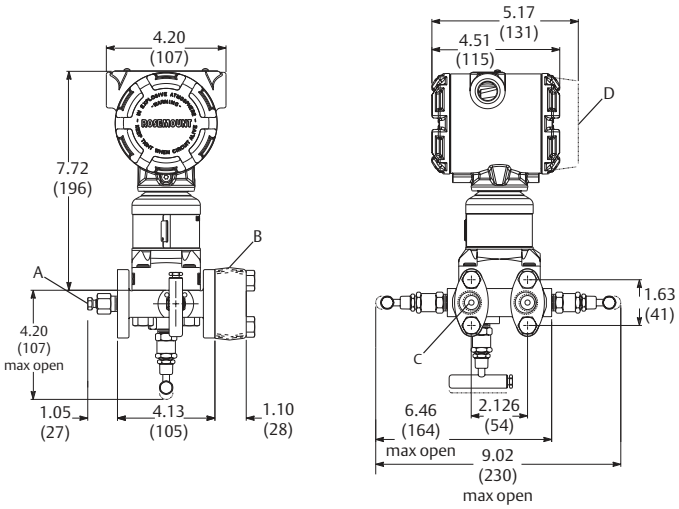

A. Drain/vent valve
B. ½–14 NPT on optional process adapter (2)
C. ¼–18 NPT on traditional manifold for process connections without the use of process adapters

Note
Dimensions are in inches (millimeters).

Figure 31: Rosemount 305 Three-Valve Traditional DIN Style Manifold

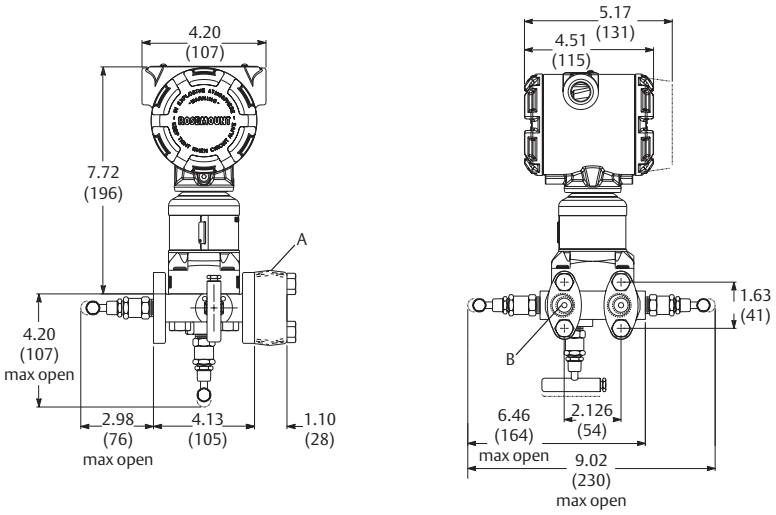

A. Drain/vent valve
B. ½–14 NPT on optional process adapter(3)
C. ¼–18 NPT on traditional manifold for process connections without the use of process adapters

Note
Dimensions are in inches (millimeters).

(3) Adapters can be rotated to give adapter connection centers of 2.0 in. (51 mm), 2.125 in. (54 mm), or 2.25 in. (57 mm).

Rosemount In-line style manifolds

Manifold handle assembly may vary slightly from image shown. All valve handle assemblies provide the same function and meet all stated drawing dimensions. Maximum valve handle width is 2.5 inches (63.5 mm).

Figure 32: Rosemount 306 Pressure Style Manifold (Rosemount 3051S_T Shown)

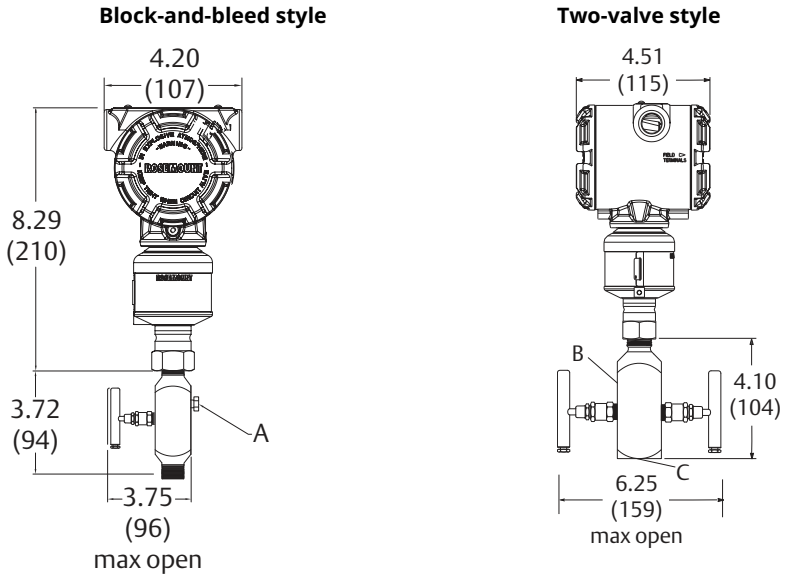

A. Bleed screw (5/16–24 UNF on Rosemount R306)

B. ¼–in. (6.35 mm) vent connection pipe plug supplied with manifold, but not installed at the factory (pipe plug supplied loose)

C. ½–14 NPT female process connection (code BA) designed for accessory attachments

Note
Dimensions are in inches (millimeters).

Note
Manifold valve orientation may vary with respect to transmitter mounting holes.

Note
½-14 MNPT and ½-14 FNPT with 316 SST process wetted connections shown. For more detailed dimensions and other configurations of the Rosemount 306 Manifold, see Type 1 drawings at Emerson.com/Global.

Rosemount conventional style manifolds

Manifold handle assembly may vary slightly from image shown. All valve handle assemblies provide the same function and meet all stated drawing dimensions. Maximum valve handle width is 2.5 inches (63.5 mm).

Figure 33: Rosemount 304 Two-Valve Flange x NPT Conventional Manifold

Note
Top of images are **instrument** side, bottom of images are **process** side.

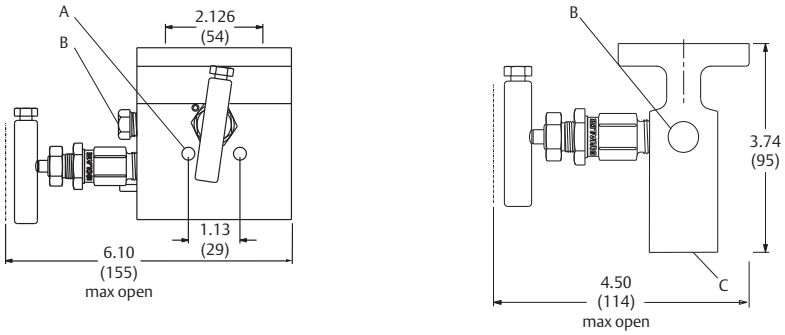

A. 0.281 mounting holes (2)
B. ¼-in. NPT test (plugged)
C. ½-in. NPT process connection on 2.125 (53.98) centers (2)

Note
Dimensions are in inches (millimeters).

Figure 34: Rosemount 304 Two-Valve Flange x Flange Conventional Manifold

Note
Top of images are **instrument** side, bottom of images are **process** side.



A. 0.281 mounting holes (2)
B. ¼-in. NPT test (plugged)
C. 7/16–20–UNF mounting holes (4) on a 2.125 (53.98) x 1.625 (41.28) hole pattern

Note
Dimensions are in inches (millimeters).

Figure 35: Rosemount 304 Three-Valve Flange x NPT Conventional Manifold

Note
Top of images are **instrument** side, bottom of images are **process** side.



A. ⌀ 0.281 mounting holes (2)
B. ¼-in. NPT test (plugged)
C. ½-in. NPT process connection on 2.125 (53.98) centers (2)

Note
Dimensions are in inches (millimeters).

Figure 36: Rosemount 304 Three-Valve Flange x Flange Conventional Manifold

Note
Top of images are **instrument** side, bottom of images are **process** side.



A. 0.281 mounting holes (2)
B. 7/16–20–UNF mounting holes (4) on a 2.125 (53.98) x 1.625 (41.28 mm) hole pattern

Note
Dimensions are in inches (millimeters).

Figure 37: Rosemount 304 Natural Gas Five-Valve Flange x NPT Conventional Manifold with NG Option

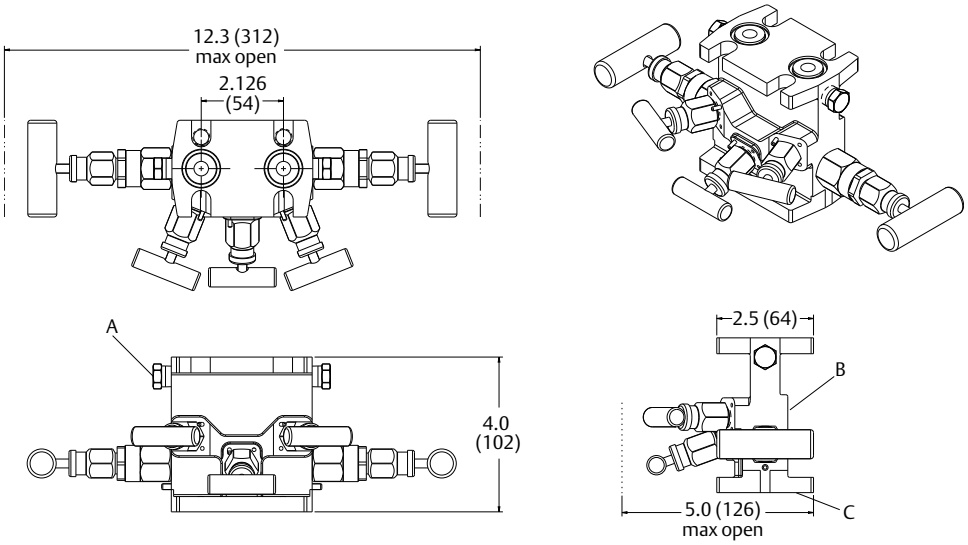

A. 0.281 mounting holes (2)
B. ¼-in. NPT test (plugged) (2)
C. ¼-in. NPT process connection on 2.125 (53.98) centers (2)
D. ¼-in. NPT vent

Note
Dimensions are in inches (millimeters).

Figure 38: Rosemount 304 Natural Gas Five-Valve Conventional Manifold with NG Option

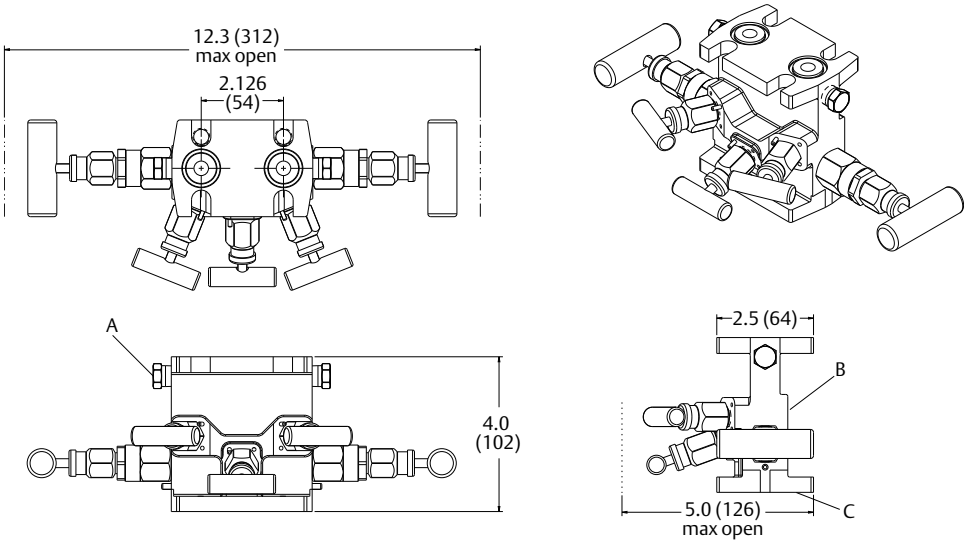

A. ¼-in. NPT test (plugged) (2)
B. ¼-in. NPT vent
C. 7/16–20–UNF mounting holes (4) on a 2.125 (53.98) x 1.625 (41.28) hole pattern

Note
Dimensions are in inches (millimeters).

Figure 39: Rosemount 304 Natural Gas Five-Valve Flange x NPT Conventional Manifold

Note
Top of images are **instrument** side, bottom of images are **process** side.

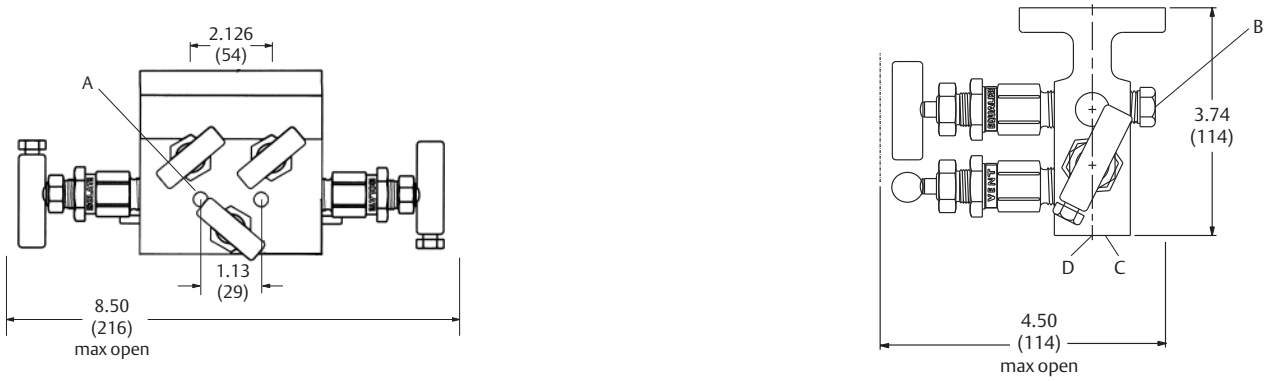

A. 0.281 Mounting holes (2)
B. ¼-in. NPT test (plugged) (2)
C. ½-in. NPT process connection on 2.125 (53.98) centers (2)
D. 1¼-in. NPT vent

Note
Dimensions are in inches (millimeters).

Figure 40: Rosemount 304RT Natural Gas Five-Valve Flange x Flange Conventional Manifold

Note
Top of images are **instrument** side, bottom of images are **process** side.

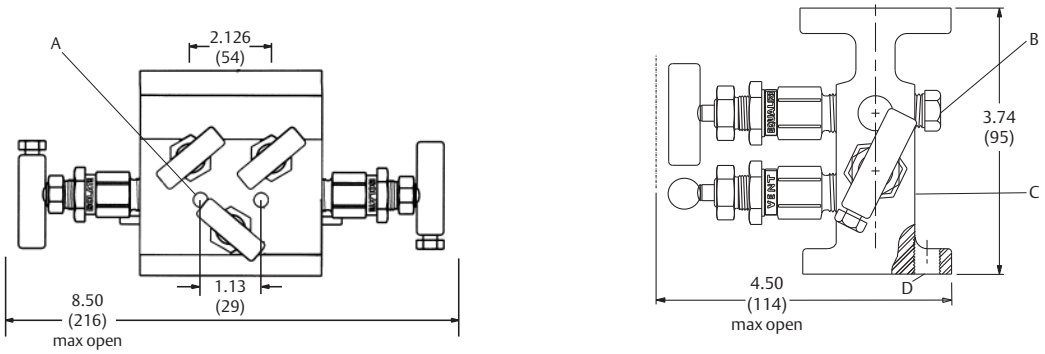

A. 0.281 mounting holes (2)
B. ¼-in. NPT test (plugged) (2)
C. ¼ -in. NPT vent
D. 7/16-20-UNF mounting holes (4) on a 2.125 (53.98) x 1.625 (41.28) hole pattern

Note
Dimensions are in inches (millimeters).

Figure 41: Rosemount 304RW Three-Valve Wafer Manifold

Note
Top of images are **instrument** side, bottom of images are **process** side.

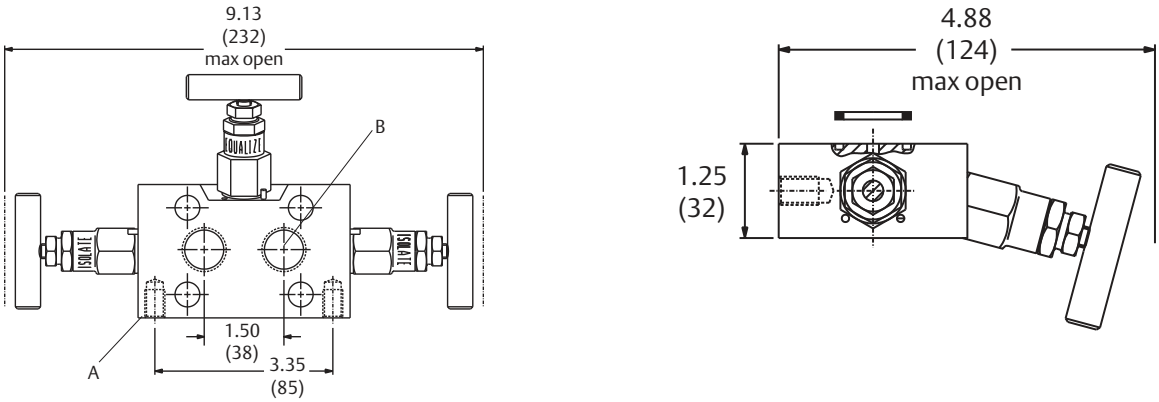

A. ⅜–16 UNC mounting holes (2)
B. ½–14 NPT process connection (2)

Note
Dimensions are in inches (millimeters).

Rosemount mounting brackets

Figure 42: Traditional Manifold with Optional Brackets for 2-in. (50.8 mm) Pipe Mounting

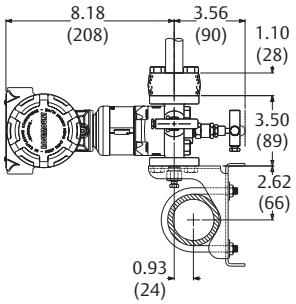

B3/B9/BC mounting bracket

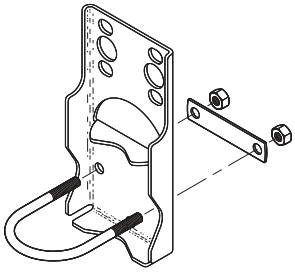

B1/B7/BA mounting bracket

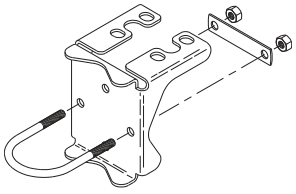

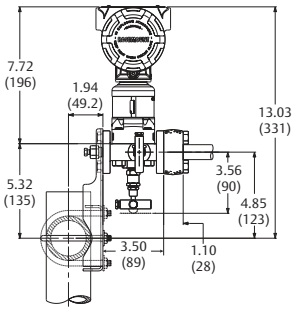

Note
Dimensions are in inches (millimeters).

Figure 43: Coplanar Manifold with Optional Bracket for 2-in. (50.8 mm) Pipe Mounting

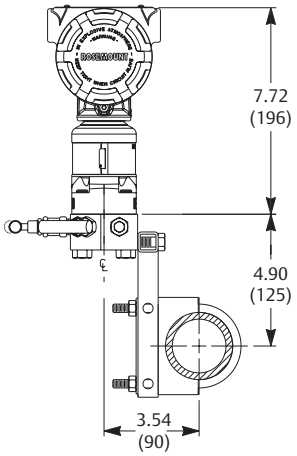

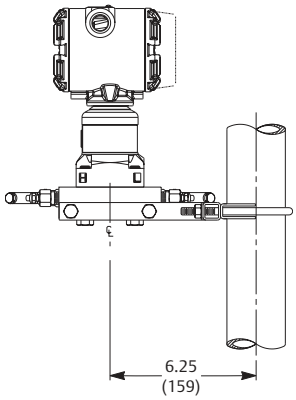

Option code B4/BE

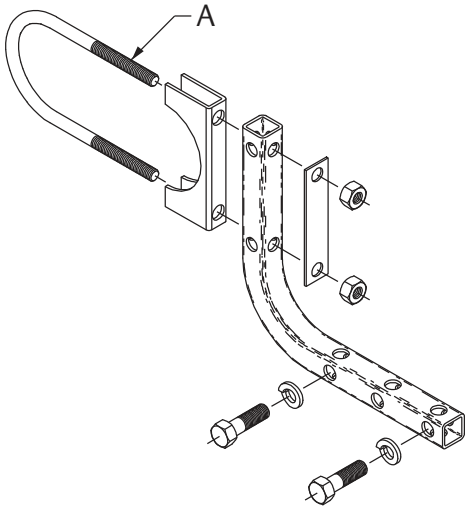

A. 2-in. (50.8 mm) U-bolt for pipe mounting

Note
Dimensions are in inches (millimeters).

Figure 44: Coplanar Manifold with Optional Bracket for 2-in. (50.8 mm) Panel Mounting

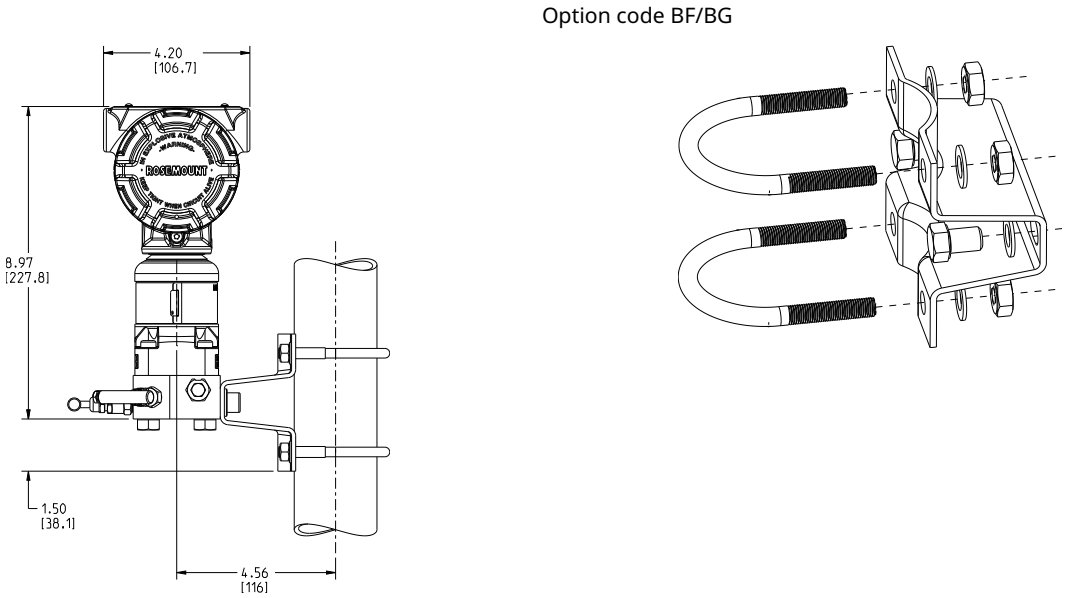

Note
Dimensions are in inches (millimeters).

Figure 45: Coplanar Side Entry with Optional Bracket for 2-in. (50.8 mm) Pipe Mounting

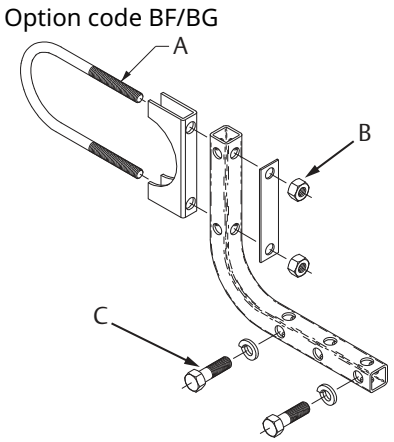

A. 2-in. (50.8 mm) U-bolt for pipe mounting
B. Spacer
C. ⅜–16 bolts for transmitter mounting

Note
Dimensions are in inches (millimeters).

Figure 46: Bracket Installation for Coplanar Side Entry Manifold

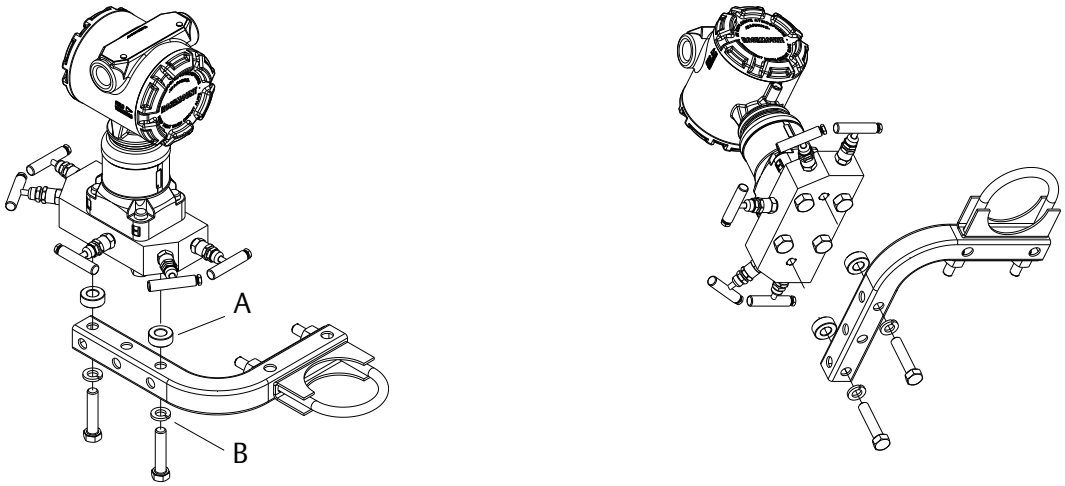

A. Spacer
B. Washer

Figure 47: VS/VC Heavy Duty Manifold Mounting Bracket

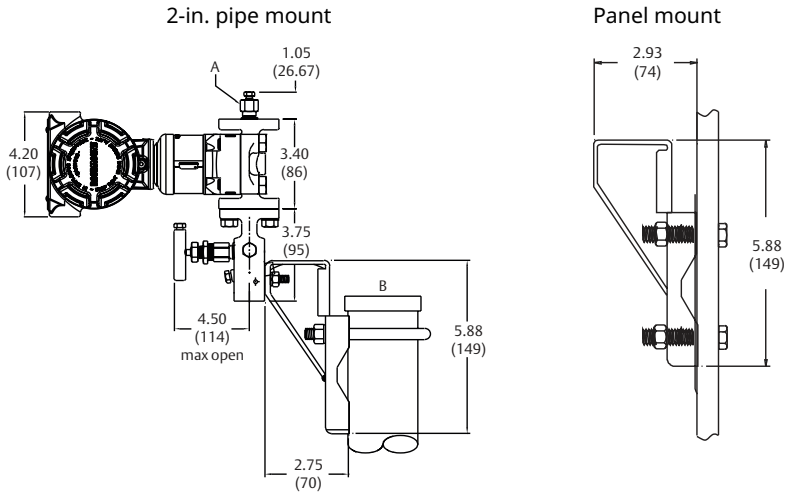

A. Drain/vent valve
B. 2-in. (50.8 mm) pipe

Note
Dimensions are in inches (millimeters).

Rosemount connectors

Manifold handle assembly may vary slightly from image shown. All valve handle assemblies provide the same function and meet all stated drawing dimensions.

Figure 48: DH Extended Stabilized Connectors for Direct Mounting

Option code DH

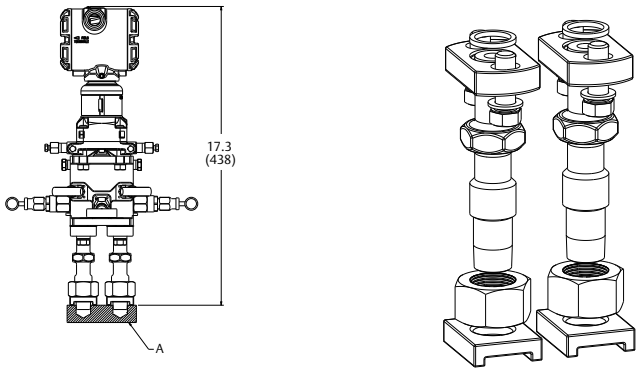

A. Cross section image is shown for dimensioning purposes only; it is not part of the transmitter assembly.

Note
Dimensions are in inches (millimeters).

Note
In default assembly orientation, manifold valves will face towards user when module high side is on user's left.

Figure 49: DV Non-Stabilized Connectors for Direct Mounting

Option code DV

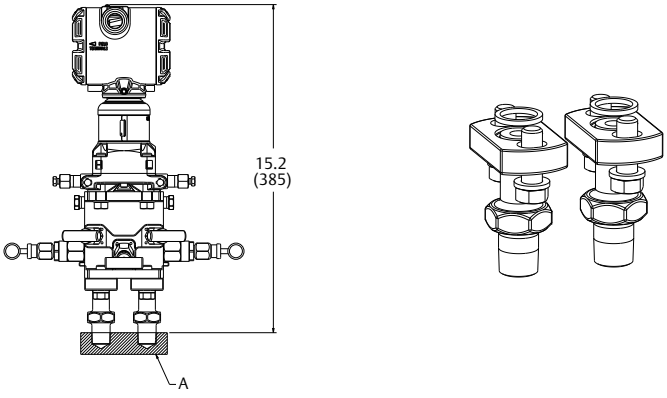

A. Cross section image is shown for dimensioning purposes only; it is not part of the transmitter assembly.

Note
Dimensions are in inches (millimeters).

Note
In default assembly orientation, manifold valves will face towards user when module high side is on user's left.

Options

Module guard

A sensor module guard is available to protect the transmitter process isolating diaphragms. This guard should be used whenever the transmitter is removed from the integral manifold to avoid damage to the isolating diaphragms.

Part number: 00305-1000-0001(5/pack)

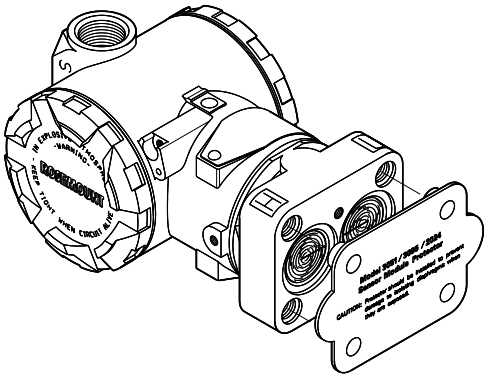

P2 cleaning for special services

This option minimizes process contaminants and prepares the unit for special service by cleaning wetted surfaces and providing material and packaging considerations per ASTM G93-96.

SG sour gas

Materials of construction comply with recommendations per NACE MR0175/ISO 15156 for sour oil field production environments. Environmental limits apply to certain materials. Consult latest standard for details. Selected materials also conform to NACE MR0103/ISO 17495 for sour refining environments.

CW1 and BR6 cold temperature

Cold temperature manifolds with options CW1 and BR6 are rated -67 °F (-55 °C) and -76 °F (-60 °C), respectively. Cold temperatures manifolds can be paired with Rosemount 3051 or 3051S transmitters that have the BR5 and BR6 options for a complete cold temperatures solution.

Dielectric isolator kits

POM dielectric isolators and PEEK bolt sleeves are available with the Rosemount 304 5-valve natural gas metering pattern manifold for added instrument protection. Dielectric kits are rated to 2500 Vdc and 5 mega-ohms.

Heat block kits

Rosemount 304 Manifolds are available with steam heat block kits for cold environments and services. The steam block attaches directly to the manifold to prevent the process from freezing.

ASME B31.1/B31.3 power piping code

Rosemount Manifolds are available in configurations that meet the requirements of the ASME B31.1/B31.3 power piping code. This code specifies design criteria for most air, gas, steam, water, and oil systems used in electric generating systems, central and district heating systems, industrial power plants, and geothermal plants. ASME B31.1/B31.3 includes requirements for manifolds, valves, and piping. Transmitters and other measuring devices do not fall within the scope of this code.

Marking

Manifolds are tagged with a part number, schematic drawing, temperature, and pressure limits.

Other publication

For additional information, see Emerson.com/Global.

Spare parts list

Table 21: Rosemount 305 Integral Manifold

Part description	Part number (traditional style)	Part number (coplanar style)
Mounting brackets (qty. 1)		
Manifold SST mounting bracket for 2-in (50 mm) pipe mount	N/A	00305-0405-0001
Manifold SST mounting bracket for side entry manifold	N/A	00305-0405-0021
CS panel mount bracket	N/A	00305-0405-0010
316 SST panel mount bracket	N/A	00305-0405-0012
Bolt kits (set of 4)		
CS bolt kit	03031-0311-0001	03031-0311-0001
SST bolt kit	03031-0311-0002	03031-0311-0002
ANSI/ASTM A193 B7M bolt kit	03031-0311-0003	03031-0311-0003
Drain/vents (qty. 1)		
316 SST drain/vent for use with 3-valve Rosemount 305 Manifold	01151-0028-0012	01151-0028-0012
Alloy C-276 drain/vent for use with 3-valve Rosemount 305 Manifold	01151-0028-0013	01151-0028-0013
O-rings (set of 12)		
Manifold-to-module O-ring, glass-filled PTFE	03031-0234-0001	03031-0234-0001
Manifold-to-module O-ring, graphite-filled PTFE	03031-0234-0002	03031-0234-0002
Sensor guard (set of 5)		
Coplanar module sensor guard	00305-1000-0001	00305-1000-0001

Table 22: Rosemount 304 Conventional Manifold

Part description	Part number (traditional style)	Part number (wafer style)
Mounting brackets (qty. 1)		
Manifold heavy duty mounting bracket, CS	01166-8005-0002	N/A
Manifold heavy duty mounting bracket, 316 SST	01166-8005-0001	N/A
Manifold SST mounting bracket for 2-in. (50.8 mm) pipe mount	N/A	00305-0405-0001
Coplanar flange kits (qty. 1)		
Differential flange kit, SST	N/A	00305-1001-0001
Gauge flange kit, SST	N/A	00305-1001-1001
O-rings (set of 12)		
Manifold-to-flange O-ring, virgin PTFE	03031-0019-0003	03031-0019-0003
Manifold-to-flange O-ring, graphite	03031-1302-0002	03031-1302-0002
Manifold-to-flange bolt kits (set of 4)		
Consult factory for part numbers.	Consult factory.	Consult factory.
Heater block kits (qty. 1)[(1)]		
Steam block kit	00305-0406-0001	N/A

Table 22: Rosemount 304 Conventional Manifold *(continued)*

Part description	Part number (traditional style)	Part number (wafer style)
DF adapter kit (qty. 2)		
SST adapters, CS bolts, glass-filled PTFE O-rings	03031-1300-0002	N/A
CS adapters, CS bolts, glass-filled PTFE O-rings	03031-1300-0005	N/A
SST adapters, SST bolts, glass-filled PTFE O-rings	03031-1300-0012	N/A
CS adapters, SST bolts, glass-filled PTFE O-rings	03031-1300-0015	N/A
Socket weld adapter kit (qty. 2)[2]		
Virgin PTFE O-rings, carbon steel bolts, 316L SST adapter	03031-1320-0002	N/A
Virgin PTFE O-rings, 316 SST bolts, 316L SST adapter	03031-1320-0012	N/A
Graphite O-rings, CS bolts, 316L SST adapter	03031-1320-0102	N/A
Graphite O-rings, 316 SST bolts, 316L SST adapter	03031-1320-0112	N/A
Natural gas connector and dielectric kits (qty. 2)[3]		
Dielectric isolator kit, 316 SST	00304-1100-1022	N/A
Dielectric isolator kit, CS	00304-1100-1122	N/A
Stabilized extended connector kit, dielectric, 316 SST	00304-1100-2000	N/A
Non-stabilized connector kit, dielectric, 316 SST	00304-1100-2010	N/A
Stabilized extended connector kit, dielectric, CS	00304-1100-2101	N/A
Non-stabilized connector kit, dielectric, CS	00304-1100-2111	N/A
Stabilized extended connector kit, PTFE O-rings, 316 SST	00304-1100-3000	N/A
Non-stabilized connector kit, PTFE O-rings, 316 SST	00304-1100-3010	N/A
Stabilized extended connectors kit, PTFE O-rings, CS	00304-1100-3101	N/A
Non-stabilized connector kit, PTFE O-rings, CS	00304-1100-3111	N/A

(1) *Not available with manifold type code 6.*
(2) *For H2 traditional flange.*
(3) *Only available with manifold type code 6.*

00813-0100-4733
Rev. SD
October 2024

For more information: **Emerson.com/global**

©2024 Emerson. All rights reserved.

Emerson Terms and Conditions of Sale are available upon request. The Emerson logo is a trademark and service mark of Emerson Electric Co. Rosemount is a mark of one of the Emerson family of companies. All other marks are the property of their respective owners.

ROSEMOUNT™

EMERSON™